CITY OF HOUSTON

HOUSTON PUBLIC WORKS

CAPITAL PROJECTS

LIFT STATION REHABILITATION AND RECONSTRUCTION FY 2023 - LOCKWOOD, SOUTH POINT, SCOTT #3, MARKET ST. #2, MUD #67, & WOODFOREST

WBS NO. R-000267-0179-4

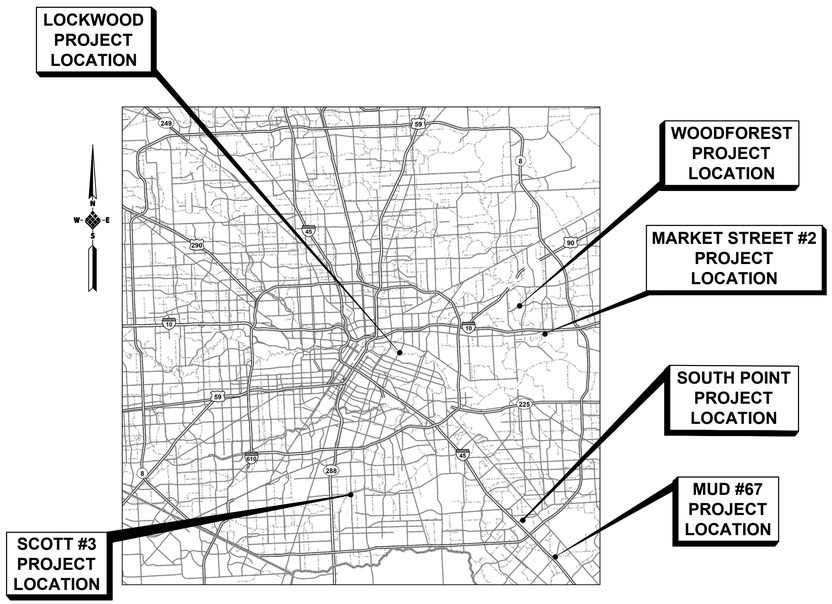

LOCATION MAP
N.T.S.

LIFT STATION	ADDRESS	KEY MAP NO.	DISTRICT
LOCKWOOD	5400 ARMOUR DRIVE	494Q	H
SOUTH POINT	10385 GULF PALMAS STREET	576Q	E
SCOTT #3	10718 1/2 SCOTT STREET	573G	D
MARKET STREET #2	13400 MARKET STREET	497K	E
MUD #67	15503 GULF FREEWAY	617B	E
WOODFOREST	12507 WOODFOREST BOULEVARD	496D	I

MAYOR
JOHN WHITMIRE

CONTROLLER
CHRIS HOLLINS

DISTRICT
COUNCIL MEMBERS

AMY PECK, DISTRICT A
TARSHA JACKSON, DISTRICT B
ABBIE KAMIN, DISTRICT C
CAROLYN EVANS–SHABAZZ, DISTRICT D
FRED FLICKINGER, DISTRICT E
TIFFANY D. THOMAS, DISTRICT F
MARY NAN HUFFMAN, DISTRICT G
MARIO CASTILLO, DISTRICT H
JOAQUIN MARTINEZ, DISTRICT I
EDWARD POLLARD, DISTRICT J
MARTHA CASTEX–TATUM, DISTRICT K

COUNCIL MEMBERS
AT–LARGE

JULIAN RAMIREZ, POSITION 1
WILLIE DAVIS, POSITION 2
TWILA CARTER, POSITION 3
LETITIA PLUMMER, POSITION 4
SALLIE ALCORN, POSITION 5

TDLR EABPR _____

DECEMBER 2025

NO.	DATE	REVISION	APP.

IDS Engineering Group
13430 NW. Freeway
Suite 700
Houston, Tx. 77040
713.462.3178
TxEng Firm 2726
TxSurv Firm 10110700

SURVEYED BY: KUO & ASSOCIATES, INC.
TBPE FIRM #F–4578; TBPLS FIRM #1007560

THIS DOCUMENT IS RELEASED FOR THE PURPOSE OF REVIEW UNDER THE AUTHORITY OF MARCEL KHOUW. P.E. 101807 ON 12/17/2025. IT IS NOT TO BE USED FOR CONSTRUCTION PURPOSES.

PARKS–FORESTRY DEPT.

METRO

HOUSTON WATER

TRANSPORTATION & DRAINAGE OPERATIONS

CAPITAL PROJECTS

SURVEY

FOR CITY OF HOUSTON USE ONLY

CITY ENGINEER DATE

DIRECTOR OF HOUSTON PUBLIC WORKS DATE

DWG. NO. G–01

SHEET NO 01 OF 321 SHEETS

IDS JOB No. 0057-085-00

PLOTTED: 12/17/2025 7:52 AM
PLOT STYLE: COH.ctb
FILE PATH: \\idseg.com\FS\Projects\0000\005708500 CoH Lift Stations – FY 2023\CAD\DWG\PRODUCTION\01–COVER.dwg

PLOTTED: 12/17/2025 7:52 AM

SHEET INDEX

SHEET NUMBER	DRAWING NUMBER	SHEET TITLE
GENERAL		
01	G-01	COVER SHEET
02	G-02	SHEET INDEX
03	G-03	GENERAL CONSTRUCTION NOTES
04	G-04	ABBREVIATIONS
05	G-05	SYMBOLS LEGEND
06	G-06	LOCKWOOD DRIVE LS SURVEY CONTROL MAP
07	G-07	SOUTH POINT BOUNDARY SURVEY
08	G-08	SCOTT No. 3 BOUNDARY SURVEY
09	G-09	MARKET STREET NO. 2 BOUNDARY SURVEY
10	G-10	MUD No. 067 BOUNDARY SURVEY
11	G-11	WOODFOREST BOUNDARY SURVEY
12	G-12	VICINITY MAPS (SHEET 1 OF 2)
13	G-13	VICINITY MAPS (SHEET 2 OF 2)
LOCKWOOD LIFT STATION		
14	LCK-C-01	EXISTING SITE ACCESS AND CLEARING PLAN
15	LCK-C-02	SITE DEMOLITION PLAN AND SWPPP
16	LCK-C-03	SECTION DEMOLITION
17	LCK-C-04	PROPOSED SITE PLAN
18	LCK-C-05	GRADING PLAN AND DRAINAGE PLAN
19	LCK-C-06	LOCKWOOD LIFT STATION PLAN AND PROFILE
20	LCK-C-07	DRAINAGE CALCULATIONS
21	LCK-C-08	PLAN AT GRADE AND BASE
22	LCK-C-09	ELEVATION SECTION
23	LCK-C-10	MECHANICAL LS PUMP CURVE DATA TABLES
24	LCK-A-01	ARCHITECTURAL PRECAST CONCRETE CONTROL BUILDING 4
25	LCK-A-02	WALKING PLATFORM LAYOUT
26	LCK-A-03	ELEVATED GENERATOR PLATFORM
27	LCK-C-11	EXISTING LIFT STATION RECORD DRAWING (SHEET 1 OF 2)
28	LCK-C-12	EXISTING LIFT STATION RECORD DRAWING (SHEET 2 OF 2)
29	LCK-S-01	COVER SHEET – 3D MODEL
30	LCK-S-02	GENERAL NOTES
31	LCK-S-03	GENERAL NOTES
32	LCK-S-04	NATURAL GAS GENERATOR PLATFORM FOUNDATION & FRAMING PLAN
33	LCK-S-05	ELECTRICAL BUILDING FOUNDATION & FRAMING PLAN
34	LCK-S-06	TYPICAL FOUNDATION DETAILS
35	LCK-S-07	GENERAL NOTES
36	LCK-S-08	SITE PLAN
37	LCK-S-09	RETAINING WALL PLAN & DETAILS
38	LCK-S-10	FOUNDATION DETAILS & SCHEDULES
39	LCK-S-11	TYPICAL STEEL DETAILS
40	LCK-S-12	FRAMING DETAILS
41	LCK-E-01	LOCKWOOD LIFT STATION EXISTING SITE PLAN
42	LCK-E-02	LOCKWOOD LIFT STATION PROPOSED SITE PLAN
43	LCK-E-03	LOCKWOOD LIFT STATION SINGLE LINE DIAGRAM
44	LCK-E-04	LOCKWOOD LIFT STATION THREE-LINE DIAGRAM
45	LCK-E-05	LOCKWOOD LIFT STATION MCC SCHEMATIC & WIRING DIAGRAM
46	LCK-E-06	LOCKWOOD LIFT STATION MCC ELEVATION
47	LCK-E-07	LOCKWOOD LIFT STATION CONTROL BUILDING PLAN
48	LCK-E-08	LOCKWOOD LIFT STATION JUNCTION BOX DETAILS
49	LCK-E-09	LOCKWOOD LIFT STATION SERVICE POLE DETAIL
50	LCK-E-10	LOCKWOOD LIFT STATION CONDUIT SCHEDULE
51	LCK-I-01	LOCKWOOD LIFT STATION P&ID DIAGRAM-I
52	LCK-I-02	LOCKWOOD LIFT STATION P&ID DIAGRAM-II
53	LCK-I-03	LOCKWOOD LIFT STATION P&ID DIAGRAM-III
54	LCK-I-04	LOCKWOOD LIFT STATION COMMUNICATION DIAGRAM
55	LCK-I-05	LOCKWOOD LIFT STATION CONTROL PANEL EQUIP. LAYOUT & SCHEDULE
56	LCK-I-06	LOCKWOOD LIFT STATION CONTROL PANEL BACK PANEL ELEVATION
57	LCK-I-07	LOCKWOOD LIFT STATION CONTROL PANEL EQUIPMENT LAYOUT
58	LCK-I-08	LOCKWOOD LIFT STATION CONTROL PANEL CONTROL WIRING DIAGRAM-I
59	LCK-I-09	LOCKWOOD LIFT STATION CONTROL PANEL CONTROL WIRING DIAGRAM-II
60	LCK-I-10	LOCKWOOD LIFT STATION CONTROL PANEL CONTROL WIRING DIAGRAM-III
61	LCK-I-11	LOCKWOOD LIFT STATION CONTROL PUMP NO. 1 CONTROL WIRING DIAGRAM
62	LCK-I-12	LOCKWOOD LIFT STATION CONTROL PUMP NO. 2 CONTROL WIRING DIAGRAM
63	LCK-I-13	LOCKWOOD LIFT STATION CONTROL PUMP NO. 3 CONTROL WIRING DIAGRAM
64	LCK-I-14	LOCKWOOD LIFT STATION CONTROL PUMP NO. 4 CONTROL WIRING DIAGRAM
65	LCK-I-15	LOCKWOOD LIFT STATION CONTROL PUMP NO. 5 CONTROL WIRING DIAGRAM
66	LCK-I-16	LOCKWOOD LIFT STATION CONTROL PUMP NO. 6 CONTROL WIRING DIAGRAM

SHEET INDEX

SHEET NUMBER	DRAWING NUMBER	SHEET TITLE
SOUTH POINT LIFT STATION		
67	SPT-C-01	SITE DEMOLITION PLAN AND SWPPP
68	SPT-C-02	SECTION DEMOLITION
69	SPT-C-03	PROPOSED SITE PLAN
70	SPT-C-04	GRADING PLAN AND DRAINAGE PLAN
71	SPT-C-05	SOUTH POINT LIFT STATION PLAN AND PROFILE
72	SPT-C-06	DRAINAGE CALCULATIONS
73	SPT-C-07	PLAN AT GRADE AND BASE
74	SPT-C-08	ELEVATION SECTION
75	SPT-C-09	EXISTING LIFT STATION RECORD DRAWING (SHEET 1 OF 3)
76	SPT-C-10	EXISTING LIFT STATION RECORD DRAWING (SHEET 2 OF 3)
77	SPT-C-11	EXISTING LIFT STATION RECORD DRAWING (SHEET 3 OF 3)
78	SPT-E-01	SOUTH POINT LIFT STATION EXISTING SITE PLAN
79	SPT-E-02	SOUTH POINT LIFT STATION PROPOSED SITE PLAN
80	SPT-E-03	SOUTH POINT LIFT STATION SINGLE LINE DIAGRAM
81	SPT-E-04	SOUTH POINT LIFT STATION THREE-LINE DIAGRAM
82	SPT-E-05	SOUTH POINT LIFT STATION PLATFORM DETAIL
83	SPT-E-06	SOUTH POINT LIFT STATION JUNCTION BOX DETAILS
84	SPT-E-07	SOUTH POINT LIFT STATION SERVICE RACK DETAIL
85	SPT-E-08	SOUTH POINT LIFT STATION CONDUIT SCHEDULE
86	SPT-E-09	SOUTH POINT LIFT STATION CONDUIT SCHEDULE
87	SPT-I-01	SOUTH POINT LIFT STATION P&ID DIAGRAM-I
88	SPT-I-02	SOUTH POINT LIFT STATION P&ID DIAGRAM-II
89	SPT-I-03	SOUTH POINT LIFT STATION COMMUNICATIONS DIAGRAM
90	SPT-I-04	SOUTH POINT LIFT STATION CTRL. CABINET EQUIP. LAYOUT & SCHEDULE
91	SPT-I-05	SOUTH POINT LIFT STATION CONTROL PANEL EQUIPMENT LAYOUT-I
92	SPT-I-06	SOUTH POINT LIFT STATION CONTROL PANEL EQUIPMENT LAYOUT-II
93	SPT-I-07	SOUTH POINT LIFT STATION CONTROL PANEL EQUIPMENT LAYOUT-III
94	SPT-I-08	SOUTH POINT LIFT STATION CONTROL PANEL CONTROL WIRING DIAGRAM-I
95	SPT-I-09	SOUTH POINT LIFT STATION CONTROL PANEL CONTROL WIRING DIAGRAM-II
96	SPT-I-10	SOUTH POINT LIFT STATION CTRL. PANEL CONTROL WIRING DIAGRAM-III
97	SPT-I-11	SOUTH POINT LIFT STATION CONTROL PANEL CONTROL WIRING DIAGRAM-IV
98	SPT-I-12	SOUTH POINT LIFT STATION PUMP NO. 1 CONTROL WIRING DIAGRAM
99	SPT-I-13	SOUTH POINT LIFT STATION PUMP NO. 2 CONTROL WIRING DIAGRAM
100	SPT-I-14	SOUTH POINT LIFT STATION PUMP NO. 3 CONTROL WIRING DIAGRAM
SCOTT NO. 3 LIFT STATION		
101	SCT-C-01	SITE DEMOLITION PLAN AND SWPPP
102	SCT-C-02	SECTION DEMOLITION
103	SCT-C-03	PROPOSED SITE PLAN
104	SCT-C-04	GRADING PLAN AND DRAINAGE PLAN
105	SCT-C-05	SCOTT STREET LIFT STATION PLAN AND PROFILE
106	SCT-C-06	DRAINAGE CALCULATIONS
107	SCT-C-07	PLAN AT GRADE AND BASE
108	SCT-C-08	ELEVATION SECTION
109	SCT-C-09	MECHANICAL LS PUMP CURVE DATA TABLES
110	SCT-A-01	ARCHITECTURAL PRECAST CONCRETE CONTROL BUILDING 4
111	SCT-A-02	FRP BUILDING DETAIL
112	SCT-C-10	EXISTING LIFT STATION RECORD DRAWING (SHEET 1 OF 2)
113	SCT-C-11	EXISTING LIFT STATION RECORD DRAWING (SHEET 2 OF 2)
114	SCT-S-01	COVER SHEET – 3D MODEL
115	SCT-S-02	GENERAL NOTES
116	SCT-S-03	GENERAL NOTES
117	SCT-S-04	GENERAL NOTES
118	SCT-S-05	SITE PLAN
119	SCT-S-06	EXISTING LIFT STATION
120	SCT-S-07	FRP BUILDING FOUNDATION PLAN
121	SCT-S-08	ELECTRICAL BUILDING FOUNDATION PLAN
122	SCT-S-09	TYPICAL FOUNDATION DETAILS
123	SCT-S-10	FOUNDATION DETAILS & SCHEDULES
124	SCT-E-01	SCOTT NO. 3 LIFT STATION EXISTING SITE PLAN
125	SCT-E-02	SCOTT NO. 3 LIFT STATION PROPOSED SITE PLAN
126	SCT-E-03	SCOTT NO. 3 LIFT STATION SINGLE LINE DIAGRAM
127	SCT-E-04	SCOTT NO. 3 LIFT STATION THREE-LINE DIAGRAM
128	SCT-E-05	SCOTT NO. 3 LIFT STATION MCC SCHEMATIC & WIRING DIAGRAM
129	SCT-E-06	SCOTT NO. 3 LIFT STATION MCC ELEVATION
130	SCT-E-07	SCOTT NO. 3 LIFT STATION CONTROL BUILDING PLAN
131	SCT-E-08	SCOTT NO. 3 LIFT STATION JUNCTION BOX DETAILS
132	SCT-E-09	SCOTT NO. 3 LIFT STATION SERVICE POLE DETAIL

SHEET INDEX

SHEET NUMBER	DRAWING NUMBER	SHEET TITLE
133	SCT-E-10	SCOTT NO. 3 LIFT STATION CONDUIT SCHEDULE
134	SCT-I-01	SCOTT NO. 3 LIFT STATION P&ID DIAMGRAM-I
135	SCT-I-02	SCOTT NO. 3 LIFT STATION P&ID DIAMGRAM-II
136	SCT-I-03	SCOTT NO. 3 LIFT STATION COMMUNICATION DIAGRAM
137	SCT-I-04	SCOTT NO. 3 LIFT STATION CONTROL PANEL EQUIP. LAYOUT & SCHEDULE
138	SCT-I-05	SCOTT NO. 3 LIFT STATION CONTROL PANEL BACK DOOR ELEVATION
139	SCT-I-06	SCOTT NO. 3 LIFT STATION CONTROL PANEL EQUIPMENT LAYOUT
140	SCT-I-07	SCOTT NO. 3 LIFT STATION CONTROL PANEL CNTRL. WIRING DIAGRAM-I
141	SCT-I-08	SCOTT NO. 3 LIFT STATION CONTROL PANEL CNTRL. WIRING DIAGRAM-II
142	SCT-I-09	SCOTT NO. 3 LIFT STATION CONTROL PANEL CNTRL. WIRING DIAGRAM-III
143	SCT-I-10	SCOTT NO. 3 LIFT STATION PUMP NO. D5 CONTROL WIRING DIAGRAM
144	SCT-I-11	SCOTT NO. 3 LIFT STATION PUMP NO. D6 CONTROL WIRING DIAGRAM
145	SCT-I-12	SCOTT NO. 3 LIFT STATION PUMP NO. W1 CONTROL WIRING DIAGRAM
146	SCT-I-13	SCOTT NO. 3 LIFT STATION PUMP NO. W2 CONTROL WIRING DIAGRAM
147	SCT-I-14	SCOTT NO. 3 LIFT STATION PUMP NO. W3 CONTROL WIRING DIAGRAM
148	SCT-I-15	SCOTT NO. 3 LIFT STATION PUMP NO. W4 CONTROL WIRING DIAGRAM
149	SCT-I-16	SCOTT NO. 3 LIFT STATION SODIUM NITRATE FEED PUMPS P&ID DIA.
150	SCT-I-17	SCOTT NO. 3 LIFT STATION SODIUM NITRATE FEED PUMPS WIRING DIA.
151	SCT-I-18	SCOTT NO. 3 LIFT STATION SODIUM NITRATE FEED PUMPS CONTROL PANEL
MARKET STREET NO. 2 LIFT STATION		
152	MKT-C-01	EXISTING SITE ACCESS PLAN
153	MKT-C-02	SITE DEMOLITION PLAN AND SWPPP
154	MKT-C-03	SECTION DEMOLITION
155	MKT-C-04	PROPOSED SITE PLAN
156	MKT-C-06	GRADING PLAN AND DRAINAGE PLAN
157	MKT-C-07	DRAINAGE CALCULATIONS
158	MKT-C-08	PLAN AT GRADE AND BASE
159	MKT-C-09	ELEVATION SECTION
160	MKT-A-01	ELEVATED ELECTRICAL PLATFORM
161	MKT-C-10	EXISTING LIFT STATION RECORD DRAWING (SHEET 1 OF 2)
162	MKT-C-11	EXISTING LIFT STATION RECORD DRAWING (SHEET 2 OF 2)
163	MKT-S-01	COVER SHEET – 3D MODEL
164	MKT-S-02	GENERAL NOTES
165	MKT-S-03	GENERAL NOTES
166	MKT-S-04	GENERAL NOTES
167	MKT-S-05	SITE PLAN
168	MKT-S-06	ELECTRICAL BUILDING FOUNDATION & FRAMING PLANS
169	MKT-S-07	TYPICAL FOUNDATION DETAILS
170	MKT-S-08	FOUNDATION DETAILS & SCHEDULES
171	MKT-S-09	TYPICAL STEEL DETAILS
172	MKT-S-10	FRAMING DETAILS
173	MKT-E-01	MARKET ST. NO. 2 LIFT STATION EXISTING SITE PLAN
174	MKT-E-02	MARKET ST. NO. 2 LIFT STATION PROPOSED SITE PLAN
175	MKT-E-03	MARKET ST. NO. 2 LIFT STATION SINGLE LINE DIAGRAM
176	MKT-E-04	MARKET ST. NO. 2 LIFT STATION THREE-LINE DIAGRAM
177	MKT-E-05	MARKET ST. NO. 2 LIFT STATION CONTROL CNTRL. CAB. ENCLO. DETL.
178	MKT-E-06	MARKET ST. NO. 2 LIFT STATION JUNCTION BOX DETAIL
179	MKT-E-07	MARKET ST. NO. 2 LIFT STATION SERVICE RACK DETAIL
180	MKT-E-08	MARKET ST. NO. 2 LIFT STATION SERVICE POLE DETAIL
181	MKT-E-09	MARKET ST. NO. 2 LIFT STATION CONDUIT SCHEDULE
182	MKT-I-01	MARKET ST. NO. 2 LIFT STATION P&ID DIAGRAM-I
183	MKT-I-02	MARKET ST. NO. 2 LIFT STATION P&ID DIAGRAM-II
184	MKT-I-03	MARKET ST. NO. 2 LIFT STATION COMMUNICATION DIAGRAM
185	MKT-I-04	MARKET ST. NO. 2 LIFT STATION CNTRL. PANEL EQUIP. LAYT. & SCHED.
186	MKT-I-05	MARKET ST. NO. 2 LIFT STATION CONTROL PANEL EQUIPMENT LAYOUT-I
187	MKT-I-06	MARKET ST. NO. 2 LIFT STATION CONTROL PANEL EQUIPMENT LAYOUT-II
188	MKT-I-07	MARKET ST. NO. 2 LIFT STATION CONTROL PANEL EQUIPMENT LAYOUT-III
189	MKT-I-08	MARKET ST. NO. 2 LIFT STA. CNTRL. PANEL CNTRL WIRING DIAGR.-I
190	MKT-I-09	MARKET ST. NO. 2 LIFT STA. CNTRL. PANEL CNTRL WIRING DIAGR.-II
191	MKT-I-10	MARKET ST. NO. 2 LIFT STA. CNTRL. PANEL CNTRL WIRING DIAGR.-III
192	MKT-I-11	MARKET ST. NO. 2 LIFT STA. CNTRL. PANEL CNTRL WIRING DIAGR.-IV
193	MKT-I-12	MARKET ST. NO. 2 LIFT STA. PUMP NO. 1 CONTROL WIRING DIAGRAM
194	MKT-I-13	MARKET ST. NO. 2 LIFT STA. PUMP NO. 2 CONTROL WIRING DIAGRAM
MUD NO. 67 LIFT STATION		
195	MUD-C-01	SITE DEMOLITION PLAN AND SWPPP
196	MUD-C-02	SECTION DEMOLITION
197	MUD-C-03	PROPOSED SITE PLAN
198	MUD-C-05	MUD NO. 67 LIFT STATION GRADING PLAN AND DRAINAGE PLAN

SHEET INDEX

SHEET NUMBER	DRAWING NUMBER	SHEET TITLE
199	MUD-C-04	MUD NO. 67 PLAN AND PROFILE
200	MUD-C-05	MUD NO. 67 PLAN AND PROFILE
201	MUD-C-06	MUD NO. 67 LIFT STATION DRAINAGE CALCULATIONS
202	MUD-C-07	MUD NO. 67 LIFT STATION PLAN AT GRADE AND BASE
203	MUD-C-08	MUD NO. 67 LIFT STATION ELEVATION SECTION
204	MUD-C-09	EXISTING LIFT STATION RECORD DRAWING
205	MUD-E-01	MUD NO. 67 LIFT STATION EXISTING SITE PLAN
206	MUD-E-02	MUD NO. 67 LIFT STATION PROPOSED SITE PLAN
207	MUD-E-03	MUD NO. 67 LIFT STATION SINGLE-LINE DIAGRAM
208	MUD-E-04	MUD NO. 67 LIFT STATION THREE-LINE DIAGRAM
209	MUD-E-05	MUD NO. 67 LIFT STATION CONTROL CABINET ENCLOSURE DETAIL
210	MUD-E-06	MUD NO. 67 LIFT STATION JUNCTION BOX DETAILS
211	MUD-E-07	MUD NO. 67 LIFT STATION SERVICE RACK DETAIL
212	MUD-E-08	MUD NO. 67 LIFT STATION SERVICE POLE DETAIL
213	MUD-E-09	MUD NO. 67 LIFT STATION CONDUIT SCHEDULE
214	MUD-I-01	MUD NO. 67 LIFT STATION P&ID DIAGRAM-I
215	MUD-I-02	MUD NO. 67 LIFT STATION P&ID DIAGRAM-II
216	MUD-I-03	MUD NO. 67 LIFT STATION COMMUNICATION DIAGRAM
217	MUD-I-04	MUD NO. 67 LIFT STATION CONTROL PANEL EQUIP. LAYOUT & SCHEDULE
218	MUD-I-05	MUD NO. 67 LIFT STATION CONTROL PANEL EQUIPMENT LAYOUT-I
219	MUD-I-06	MUD NO. 67 LIFT STATION CONTROL PANEL EQUIPMENT LAYOUT-II
220	MUD-I-07	MUD NO. 67 LIFT STATION CONTROL PANEL EQUIPMENT LAYOUT-III
221	MUD-I-08	MUD NO. 67 LIFT STATION CONTROL PANEL CONTROL WIRING DIAGRAM-I
222	MUD-I-09	MUD NO. 67 LIFT STATION CONTROL PANEL CONTROL WIRING DIAGRAM-II
223	MUD-I-10	MUD NO. 67 LIFT STATION CONTROL PANEL CONTROL WIRING DIAGRAM-III
224	MUD-I-11	MUD NO. 67 LIFT STATION CONTROL PANEL CONTROL WIRING DIAGRAM-IV
225	MUD-I-12	MUD NO. 67 LIFT STATION PUMP NO. 1 CONTROL WIRING DIAGRAM
226	MUD-I-13	MUD NO. 67 LIFT STATION PUMP NO. 2 CONTROL WIRING DIAGRAM
WOODFOREST LIFT STATION		
227	WDF-C-01	SITE DEMOLITION PLAN AND SWPPP
228	WDF-C-02	SECTION DEMOLITION
229	WDF-C-03	PROPOSED SITE PLAN
230	WDF-C-07	WOODFOREST LIFT STATION GRADING PLAN AND DRAINAGE PLAN
231	WDF-C-08	WOODFOREST LIFT STATION DRAINAGE CALCULATIONS
232	WDF-C-09	WOODFOREST LIFT STATION PLAN AND PROFILE
233	WDF-C-10	WOODFOREST LIFT STATION PLAN AT GRADE AND BASE
234	WDF-C-11	WOODFOREST LIFT STATION ELEVATION SECTION
235	WDF-C-12	MECHANICAL LIFT STATION PUMP DATA TABLES
236	WDF-A-01	ARCHITECTURAL PRECAST CONCRRETE CONTROL BUILDING 4
237	WDF-A-02	WOODFOREST LIFT STATION FRP BUILDING DETAIL
238	WDF-C-13	EXISTING LIFT STATION RECORD DRAWING (SHEET 1 OF 3)
239	WDF-C-14	EXISTING LIFT STATION RECORD DRAWING (SHEET 2 OF 3)
240	WDF-C-15	EXISTING LIFT STATION RECORD DRAWING (SHEET 3 OF 3)
241	WDF-S-01	COVER SHEET – 3D MODEL
242	WDF-S-02	GENERAL NOTES
243	WDF-S-03	GENERAL NOTES
244	WDF-S-04	GENERAL NOTES
245	WDF-S-05	SITE PLAN
246	WDF-S-06	FRP BUILDING FOUNDATION PLAN
247	WDF-S-07	ELECTRICAL BUILDING FOUNDATION PLAN
248	WDF-S-08	TYPICAL FOUNDATION DETAILS
249	WDF-S-09	FOUNDATION DETAILS & SCHEDULES
250	WDF-E-01	WOODFOREST LIFT STATION EXISTING SITE PLAN
251	WDF-E-02	WOODFOREST LIFT STATION PROPOSED SITE PLAN
252	WDF-E-03	WOODFOREST LIFT STATION SINGLE LINE DIAGRAM
253	WDF-E-04	WOODFOREST LIFT STATION THREE-LINE DIAGRAM
254	WDF-E-05	WOODFOREST LIFT STATION MCC SCHEMATIC & WIRING DIAGRAM
255	WDF-E-06	WOODFOREST LIFT STATION MCC ELEVATION
256	WDF-E-07	WOODFOREST LIFT STATION CONTROL BUILDING PLAN
257	WDF-E-08	WOODFOREST LIFT STATION JUNCTION BOX DETAILS
258	WDF-E-09	WOODFOREST LIFT STATION SERVICE POLE DETAIL
259	WDF-E-10	WOODFOREST LIFT SERVICE RACK DETAIL
260	WDF-E-11	WOODFOREST LIFT STATION CONDUIT SCHEDULE
261	WDF-I-01	WOODFOREST LIFT STATION P&ID DIAGRAM-I
262	WDF-I-02	WOODFOREST LIFT STATION P&ID DIAGRAM-II
263	WDF-I-03	WOODFOREST LIFT STATION COMMUNICATION DIAGRAM
264	WDF-I-04	WOODFOREST LIFT STATION CONTROL CABINET EQUIP. LAYOUT & SCHEDULE
265	WDF-I-05	WOODFOREST LIFT STATION CONTROL CABINET BACK DOOR ELEVATION

SHEET INDEX

SHEET NUMBER	DRAWING NUMBER	SHEET TITLE
266	WDF-I-06	WOODFOREST LIFT STATION CONTROL CABINET EQUIPMENT LAYOUT
267	WDF-I-07	WOODFOREST LIFT STATION CONTROL PANEL CONTROL WIRING DIAGRAM-I
268	WDF-I-08	WOODFOREST LIFT STATION CONTROL PANEL CONTROL WIRING DIAGRAM-II
269	WDF-I-09	WOODFOREST LIFT STATION CONTROL PANEL CONTROL WIRING DIAGRAM-III
270	WDF-I-10	WOODFOREST LIFT STATION PUMP NO. 1 CONTROL WIRING DIAGRAM
271	WDF-I-11	WOODFOREST LIFT STATION PUMP NO. 2 CONTROL WIRING DIAGRAM
272	WDF-I-12	WOODFOREST LIFT STATION PUMP NO. 3 CONTROL WIRING DIAGRAM
273	WDF-I-13	WOODFOREST LIFT STATION SODIUM NITRATE FEED PUMPS P&ID DIAGRAM
274	WDF-I-14	WOODFOREST LIFT STATION SODIUM NITRATE FEED PUMPS WIRING DIAGRAM
275	WDF-I-15	WOODFOREST LIFT STATION SODIUM NITRATE FEED PUMPS CONTROL PANEL
LIFT STATION DETAILS		
276	C-01	MISCELLANEOUS DETAILS (SHEET 1 OF 2)
277	C-02	MISCELLANEOUS DETAILS (SHEET 2 OF 2)
278	C-03	TYPICAL SANITARY SEWER DETAILS (SHEET 1 OF 2)
279	C-04	TYPICAL SANITARY SEWER DETAILS (SHEET 2 OF 2)
280	C-05	CONCRETE PAVEMENT DETAILS
281	C-06	CONSTRUCTION JOINT DETAILS
282	C-07	DRIVEWAY DETAIL WITH CURB FOR LOCAL RESID. STREETS
283	C-08	DRIVEWAY DETAIL WITH CURBED STREETS
284	C-09	STREET CUT FOR CONCRETE PAVEMENT REPLACEMENT RESTORATION
285	C-10	STREET CUT FOR CONCRETE PAVEMENT REPLACEMENT RESTORATION
286	C-11	STREET CUT FOR ASPHALT PAVEMENT REPLACEMENT RESTORATION
287	C-12	PAVEMENT REPAIR DETAIL FOR STREET CUTS
288	C-13	PAVEMENT REPAIR DETAIL FOR STREET CUTS
289	C-14	CURB, CURB AND GUTTER AND HEADER DETAILS
290	C-15	TYPICAL SITE DETAILS
291	C-16	TYPICAL SIDEWALK LAYOUT AND DETAILS FOR STREETS WITH CURBS
292	C-17	TYPICAL DETAILS – CIVIL (SHEET 1 OF 4)
293	C-18	TYPICAL DETAILS – CIVIL (SHEET 2 OF 4)
294	C-19	TYPICAL DETAILS – CIVIL (SHEET 3 OF 4)
295	C-20	TYPICAL DETAILS – CIVIL (SHEET 4 OF 4)
296	C-21	DISCHARGE PIPING SUPPORT DETAILS
297	C-22	STORM SEWER DETAILS (SHEET 1 OF 7)
298	C-23	STORM SEWER DETAILS (SHEET 2 OF 7)
299	C-24	STORM SEWER DETAILS (SHEET 3 OF 7)
300	C-25	STORM SEWER DETAILS (SHEET 4 OF 7)
301	C-26	STORM SEWER DETAILS (SHEET 5 OF 7)
302	C-27	STORM SEWER DETAILS (SHEET 6 OF 7)
303	C-28	STORM SEWER DETAILS (SHEET 7 OF 7)
304	E-01	ELECTRICAL TYPICAL DETAILS-I
305	E-02	ELECTRICAL TYPICAL DETAILS-I
306	E-03	ELECTRICAL RADAR LEVEL TRANSMITTER GAUGING SYSTEM DETAILS-I
307	E-04	ELECTRICAL RADAR LEVEL TRANSMITTER GAUGING SYSTEM DETAILS-II
STORMWATER POLLUTION PREVENTION PLAN		
308	C-29	STORMWATER POLLUTION PREVENTION DETAILS
TRAFFIC CONTROL PLANS		
309	TCP-01	TCP NOTES
310	TCP-02	TCP ONE-LANE CLOSURE
311	TCP-03	DRIVEWAY TIE-IN ON TWO-LANE ROAD
312	TCP-04	TRAFFIC CONTROL PLAN – LOCKWOOD LIFT STATION
313	TCP-05	TRAFFIC CONTROL PLAN – SCOTT STREET NO. 3 LIFT STATION
314	TCP-06	TRAFFIC CONTROL PLAN – MARKET STREET NO. 2 LIFT STATION
315	TCP-07	TRAFFIC CONTROL PLAN – WOODFOREST LIFT STATION
TREE PROTECTION PLANS		
316	TPP-01	TREE PROTECTION PLAN
317	TPP-02	TREE PROTECTION PLAN
318	TPP-03	TREE PROTECTION PLAN
319	TPP-04	TREE PROTECTION PLAN
320	TPP-05	TREE PROTECTION PLAN
321	TPP-06	TREE PROTECTION PLAN

NO.	DATE	REVISION	APP.

IDS Engineering Group
13430 NW. Freeway, Suite 700
Houston, Tx. 77040
713.462.3178
TxEng Firm 2726 | TxSurv Firm 10110700

SURVEYED BY: KUO & ASSOCIATES, INC.
TBPE FIRM #F-4578; TBPLS FIRM #1007560

THIS DOCUMENT IS RELEASED FOR THE PURPOSE OF REVIEW UNDER THE AUTHORITY OF MARCEL KHOUW, P.E. 101807 ON 12/17/2025. IT IS NOT TO BE USED FOR CONSTRUCTION PURPOSES.

CITY OF HOUSTON

HOUSTON PUBLIC WORKS

LIFT STATION RENEWAL AND REPLACEMENT FY 2023

SHEET INDEX

WBS NUMBER	FOR CITY OF HOUSTON USE ONLY
R-000267-0179-4	
DRAWING SCALE	
HORIZ: N/A VERT: N/A	
CITY OF HOUSTON PM	
NAWARAJ PANTA, P.E.	
DWG. NO. G-02	SHEET NO. 02 OF 321

FILE PATH: \\idseg.com\FS\Projects\0000\005708500 CoH Lift Stations – FY 2023\CAD\DWG\PRODUCTION\02-SHEET INDEX.dwg

PLOTTED: 12/17/2025 7:52 AM

GENERAL CONSTRUCTION NOTES:

1. THE CONTRACTOR SHALL BE FULLY RESPONSIBLE FOR ANY AND ALL DAMAGE TO THE EXISTING PUBLIC OR PRIVATE UTILITY LINES, INCLUDING BUT NOT LIMITED TO WATER LINES, WASTEWATER COLLECTION SYSTEMS AND STORM SEWERS, DURING CONSTRUCTION. ALL DAMAGES SHALL BE REPAIRED IN ACCORDANCE WITH CITY OF HOUSTON, DEPARTMENT OF PUBLIC WORKS AND ENGINEERING "STANDARD CONSTRUCTION SPECIFICATIONS" WITH LATEST ADDENDA AND AMENDMENTS THERETO, WITH NO COST TO THE DISTRICT.
2. BACKFILLING AND CLEAN-UP SHALL IMMEDIATELY FOLLOW PIPE LAYING OPERATION. PIPE LAYING SHALL BE SUSPENDED IF CLEAN-UP IS NOT SATISFACTORY.
3. CONSTRUCTION STAKING (ALIGNMENT AND GRADE) TO BE PROVIDED BY THE CONTRACTOR. NO SEPARATE PAY.
4. CONTRACTOR TO USE CAUTION WHEN CROSSING ALL EXISTING FACILITIES. ANY DAMAGE TO BE REPAIRED TO ORIGINAL OR BETTER CONDITION AT THE CONTRACTORS EXPENSE. NO SEPARATE PAY.
5. SURPLUS EXCAVATED MATERIAL SHALL BE PLACED AS DIRECTED BY THE ENGINEER. IF THE ENGINEER NOTIFIES THE CONTRACTOR THAT THE OWNER DOES NOT HAVE USE FOR THIS MATERIAL, THE SURPLUS MATERIAL BECOMES THE PROPERTY OF THE CONTRACTOR AND HIS RESPONSIBILITY TO DISPOSE OF THE MATERIAL.
6. NO STREETS SHALL BE BLOCKED WITHOUT SPECIFIC WRITTEN APPROVAL OF THE APPROPRIATE GOVERNMENTAL ENTITY.
7. CONTRACTOR SHALL MAINTAIN DRAINAGE TO ORIGINAL OR BETTER CONDITION THROUGHOUT THE CONSTRUCTION OF THE PROJECT. NO SEPARATE PAY.
8. PAVED SURFACES SHALL BE PROTECTED FROM DAMAGE FROM TRACKED EQUIPMENT.
9. WHERE NONMETALLIC PIPE IS INSTALLED, A DURABLE METAL TAPE SHALL BE INSTALLED CONCURRENTLY (APPROXIMATELY ONE FOOT ABOVE PIPE) FOR DETECTION PURPOSES.
10. ANY DEVIATION FROM DESIGN OR DETAILS SHALL BE APPROVED IN WRITING BY THE ENGINEER.
11. ALL EXISTING UNDERGROUND UTILITIES ARE SHOWN IN APPROXIMATE WAY ONLY. THE CONTRACTOR SHALL REQUEST THE EXACT LOCATION OF THESE FACILITIES BY CALLING THE ONE-CALL NOTIFICATION SYSTEM. CONTRACTOR SHALL GIVE NOTICE TO TEXAS811 (TELEPHONE NUMBER 811) REQUESTING THE LOCATION OF UNDERGROUND FACILITIES AND UTILITY LINES AT EACH EXCAVATION SITE AS REQUIRED BY TEXAS UTILITIES CODE, CHAPTER 251, NOT EARLIER THAN THE 14TH DAY BEFORE THE DATE THE EXCAVATION IS TO BEGIN OR LATER THAN THE 48TH HOUR BEFORE THE TIME THE EXCAVATION IS TO BEGIN, EXCLUDING SATURDAYS, SUNDAYS, AND LEGAL HOLIDAYS. THE CONTRACTOR IS FULLY RESPONSIBLE FOR ANY AND ALL DAMAGES WHICH OCCUR DUE TO HIS FAILURE TO REQUEST THE LOCATION AND PRESERVATION OF THESE UNDERGROUND FACILITIES. CONTRACTOR SHALL COORDINATE ALL CONFLICTS WITH THE APPROPRIATE GOVERNING AGENCY. NO SEPARATE PAY.
12. CONTRACTOR SHALL COMPLY WITH ALL FEDERAL, STATE, AND LOCAL LAWS. THIS INCLUDES BUT IS NOT LIMITED TO COMPLIANCE WITH THE LATEST EDITION OF OSHA REGULATIONS AND THE STATE OF TEXAS LAWS CONCERNING EXCAVATION AND CLEARANCES FROM OVERHEAD POWER LINES.
13. CONTRACTOR SHALL PROVIDE A TRENCH SAFETY SYSTEM TO MEET, AS A MINIMUM, THE REQUIREMENTS OF OSHA SAFETY AND HEALTH REGULATION, PART 1926, SUBPART P AS PUBLISHED IN THE FEDERAL REGISTER, VOLUME 54, NO. 209, DATED OCTOBER 31, 1989.
14. CONTRACTOR SHALL MAINTAIN AT LEAST ONE LANE OF TRAFFIC IN EACH DIRECTION DURING WORKING HOURS OR PROVIDE DETOURS AROUND CONSTRUCTION SITE, AND USE UNIFORMED POLICE TO CONTROL TRAFFIC WHEN REQUIRED BY OWNER.
15. CONTRACTOR SHALL GIVE NOTICE TO ALL AUTHORIZED INSPECTORS, SUPERINTENDENTS, OR PERSONS IN CHARGE OF PRIVATE AND PUBLIC UTILITIES OR RAILROADS AFFECTED BY HIS OPERATIONS PRIOR TO COMMENCEMENT OF WORK.
16. CONTRACTOR SHALL ASSURE HIMSELF THAT ALL CONSTRUCTION PERMITS HAVE BEEN OBTAINED PRIOR TO COMMENCEMENT OF WORK. REQUIRED PERMITS THAT CAN BE ISSUED TO CONTRACTOR WILL BE OBTAINED AT HIS EXPENSE.
17. ALL UTILITY TRENCHES TO BE BACKFILLED TO 95 PERCENT STANDARD PROCTOR DENSITY UNLESS OTHERWISE NOTED.
18. ALL DEBRIS GENERATED FROM WORK ON THIS PROJECT SHALL BE DISPOSED OF BY THE CONTRACTOR AT AN APPROVED LANDFILL.
19. ANY REFERENCE TO CODES OR SPECIFICATIONS SHALL BE WITH RESPECT TO CURRENT EDITIONS OF THE SAME.
20. INTERRUPTION OF FLOWS THROUGH EXISTING PUMPING FACILITIES IS NOT PERMITTED WITHOUT PRIOR WRITTEN APPROVAL OF OWNER. SUBMIT FOR APPROVAL A CONSTRUCTION PLAN WHICH DETAILS SCHEDULE AND TECHNIQUES TO BE USED PRIOR TO ANY CONNECTIONS TO EXISTING PIPES OR STRUCTURES. PARTIAL INTERRUPTION OF FLOWS TO BE SCHEDULED DURING LOW FLOW PERIODS FOR AS SHORT A DURATION AS PRACTICAL MAKE PROVISIONS FOR ACCOMMODATING PEAK FLOWS WHICH MAY OCCUR DURING CONSTRUCTION OPERATIONS. OWNER AND PLANT SUPERINTENDENT TO BE NOTIFIED WHEN ANY INTERRUPTIONS ARE TO BE MADE. SHOW LOCATION, WITH DIMENSIONS, ON PROJECT "RED LINE" DRAWINGS. NO SEPARATE PAY.
21. THE FINISHED GRADE ELEVATIONS SHOWN ARE INTENDED TO PROVIDE DRAINAGE AWAY FROM THE PLANT FACILITIES. MINOR FIELD CHANGES MAY BE NECESSARY TO PROVIDE ADEQUATE DRAINAGE. GRADE UNIFORMLY BETWEEN ELEVATIONS SHOWN TO PROVIDE DRAINAGE.
22. WALL PENETRATIONS 4 INCHES AND LARGER ARE TO BE MADE WITH WALL PIPES WITH INTEGRALLY CAST OR CONTINUOUSLY WELDED WALL COLLARS. SMALLER WALL PENETRATIONS ARE TO BE MADE WITH WALL SLEEVES OR WALL PIPES
23. MAINTAIN MINIMUM CLEARANCE OF 10 FEET FROM EDGE OF STRUCTURES TO CLOSEST EDGE OF PIPELINE ADJACENT AND PARALLEL TO EDGE OF STRUCTURE UNLESS OTHERWISE NOTED ON PLANS.
24. UNLESS OTHERWISE NOTED, ABOVE GROUND FITTINGS AND FIRST UNDERGROUND CONNECTION TO BE FLANGED
25. PLACE PARALLEL PIPING IN COMMON TRENCH WHEN FEASIBLE, MAINTAIN MINIMUM 4 FOOT HORIZONTAL SEPARATION FROM OUTSIDE OF PIPE TO OUTSIDE OF PIPE FOR PIPE 6"Ø AND ABOVE.
26. UNLESS OTHERWISE NOTED, ALL PROCESS PIPING TRENCHES UNDER PAVEMENT AND ONE FOOT FROM PAVEMENT EDGE TO BE BACKFILLED WITH CEMENT STABILIZED SAND TO 1-FOOT BELOW PAVEMENT SUBGRADE.
27. CONTRACTOR SHALL NOT OPERATE ANY EXISTING VALVES, PLANT APPURTENANCES OR PLANT EQUIPMENT. PROVIDE SUFFICIENT LEAD TIME FOR PLANT OPERATOR WHERE IT BECOMES NECESSARY TO ACTUATE OR DE-ACTUATE VALVES, PLANT APPURTENANCES OR PLANT EQUIPMENT.
28. CONTRACTOR SHALL REMOVE ALL MUD, DIRT AND DEBRIS DEPOSITED OR DROPPED ON EXISTING PAVEMENT DUE TO HIS CONSTRUCTION ACTIVITY DAILY.
29. CONSTRUCT WASTEWATER COLLECTION SYSTEMS, WATER LINES, AND STORM DRAINAGE IN ACCORDANCE WITH THE LATEST EDITION OF THE PUBLICATIONS STANDARD CONSTRUCTION SPECIFICATIONS FOR WASTEWATER COLLECTION SYSTEMS, WATER LINES, STORM DRAINAGE, AND STREET PAVING AND STANDARD CONSTRUCTION DETAILS FOR WASTEWATER COLLECTION SYSTEMS, WATER LINES, STORM DRAINAGE, AND STREET PAVING PUBLISHED BY THE CITY OF HOUSTON, DEPARTMENT OF PUBLIC WORKS AND ENGINEERING.
30. CONTRACTOR SHALL NOTIFY THE OFFICE OF THE CITY ENGINEER, DEPARTMENT OF PUBLIC WORKS AND ENGINEERING IN WRITING PRIOR TO COMMENCING CONSTRUCTION
31. ALIGNMENT, CENTERLINE CURVE DATA AND STATIONING TO BE VERIFIED BY ON-THE-GROUND SURVEY AND ELEVATIONS OF ALL CONNECTIONS TO EXISTING FACILITIES TO BE CONFIRMED PRIOR TO WORK START. CONTRACTOR TO NOTIFY OWNER'S REPRESENTATIVE OF ANY DISCREPANCIES PRIOR TO CONSTRUCTION.
32. NO EXTRA PAY WILL BE ALLOWED FOR WORK CALLED FOR ON THE PLANS BUT NOT INCLUDED ON THE BID SHEET. THIS INCIDENTAL WORK WILL BE REQUIRED AND SHALL BE INCLUDED UNDER THE PAY ITEM TO WHICH IT RELATES.
33. VEHICLE BARRIERS FOR PASSENGER VEHICLES SHALL BE DESIGNED TO RESIST A CONCENTRATED LOAD OF 6,000 LBS
34. CONTRACTOR SHALL BE RESPONSIBLE FOR DAMAGES TO EXISTING WATER, WASTEWATER, STORM WATER LINES AND TRAFFIC CONTROL DEVICES. DAMAGES SHALL BE REPAIRED IN ACCORDANCE WITH THE HOUSTON PUBLIC WORKS, STANDARD CONSTRUCTION SPECIFICATIONS FOR WASTEWATER COLLECTION SYSTEM, WATER LINES, STORM DRAINAGE, AND STREET PAVING AND STANDARD CONSTRUCTION DETAILS FOR WASTEWATER COLLECTION SYSTEMS, WATER LINES, STORM DRAINAGE, AND STREET PAVING, REFERENCED ABOVE, AT NO ADDITIONAL COST.
35. CONTRACTOR SHALL NOTIFY THE OFFICE OF THE CITY ENGINEER, HOUSTON PUBLIC WORKS @ 832-394-9098 OR VIA FAX AT 832-395-4424 FOR INSPECTION AT LEAST 48 HOURS PRIOR TO COMMENCING CONSTRUCTION.
36. ADEQUATE DRAINAGE SHALL BE MAINTAINED AT ALL TIMES DURING CONSTRUCTION AND ANY DRAINAGE DITCH OR STRUCTURE DISTURBED DURING CONSTRUCTION SHALL BE RESTORED TO EXISTING CONDITIONS OR BETTER.
37. CONTRACTOR SHALL TAKE NECESSARY PRECAUTIONS TO PROTECT ROOT SYSTEMS OF SHRUBS, PLANTS AND TREES ALONG THE AREA OF EXCAVATION.
38. CONTRACTOR SHALL MAINTAIN A SET OF REDLINE DRAWINGS AND RECORD AS-BUILT CONDITIONS DURING CONSTRUCTION. THESE REDLINE MARKED UP DRAWINGS WILL BE SUBMITTED TO THE DESIGN CONSULTANT WHO WILL MAKE THE CHANGES ON THE ORIGINAL TRACINGS, LABEL EACH SHEET IN THE SET AS "RECORD DRAWINGS", AND RETURN IT TO THE OFFICE OF THE CITY ENGINEER.

SANITARY SEWER CONSTRUCTION NOTES

1. ALL SEWERS SHALL BE CONSTRUCTED IN ACCORDANCE WITH THE CITY OF HOUSTON "STANDARD CONSTRUCTION SPECIFICATIONS FOR WASTEWATER COLLECTION SYSTEMS, WATER LINES, STORM DRAINAGE, STREET PAVING, AND TRAFFIC" AND ALL CURRENT AMENDMENTS THERETO AND BE SUBJECT TO A STANDARD EXFILTRATION TEST. TESTS ARE TO BE PERFORMED ON THE TOTAL FOOTAGE OF SEWER LINE INCLUDED IN THE PROJECT. REQUIREMENTS OF TEXAS ADMINISTRATIVE CODE, TITLE 30 CHAPTER 217, "DESIGN CRITERIA DOMESTIC WASTEWATER SYSTEMS" SHALL GOVERN WHERE CONFLICTS EXIST EXCEPT WHERE CITY REQUIREMENTS ARE MORE STRINGENT.
2. ALL MANHOLES ARE TO BE PER CITY OF HOUSTON STANDARD DETAILS DRAWING NUMBERS 02082-01, 02082-02, 02082N-02, 02082-03, AND 02082N-03 UNLESS OTHERWISE NOTED. USE 2010 VERSION AS APPLICABLE.
3. SANITARY SEWER MANHOLES WILL HAVE BEDDING AND BACKFILL PER CITY OF HOUSTON STANDARD DETAILS DRAWING NO. 02317-08 UNLESS OTHERWISE NOTED.
4. ALL SANITARY SEWER LINES UNDER PROPOSED OR FUTURE PAVEMENT AND TO A POINT ONE (1) FOOT BACK OF ALL PROPOSED OR FUTURE CURBS SHALL HAVE BEDDING PER CITY OF HOUSTON STANDARD DETAILS DRAWING NUMBERS 02317-01, 02317-02, OR 02317-03 AS APPLICABLE, WITH 1 ½ SACK CEMENT/CY STABILIZED SAND BACKFILL UP TO THE BOTTOM OF THE PAVEMENT SUBGRADE. 100 PSI PERFORMANCE RESULTS ARE STILL REQUIRED.
5. CONTRACTOR SHALL PROVIDE A MINIMUM HORIZONTAL CLEARANCE OF 9' FEET BETWEEN WATER LINES AND SANITARY SEWER MANHOLES AND LINES.
6. SANITARY SEWER MANHOLE RIMS OUTSIDE OF PROPOSED PAVING WILL BE SET 3" – 6" ABOVE THE SURROUNDING LEVEL FINISHED GRADE AFTER PAVING WITH SLOPED BACKFILL ADDED FOR STORM WATER TO DRAIN AWAY FROM MANHOLE RIM.
7. ALL NEW AND EXISTING MANHOLES SHALL BE CORED WHEN MAKING CONNECTIONS THAT WERE NOT MADE BY THE MANUFACTURER CONTRACTOR SHALL USE RESILIENT CONNECTOR MEETING THE REQUIREMENTS OF ASTM C-923 FOR PIPE CONNECTOR.

CENTERPOINT ENERGY NOTES

CAUTION: UNDERGROUND GAS FACILITIES
LOCATIONS OF CENTERPOINT ENERGY MAIN LINES (TO INCLUDE CENTERPOINT ENERGY, INTRASTATE PIPELINE, L.L.C. WHERE APPLICABLE) ARE SHOWN IN AN APPROXIMATE LOCATION ONLY. SERVICE LINES ARE USUALLY NOT SHOWN. OUR SIGNATURE ON THESE PLANS ONLY INDICATES THAT OUR FACILITIES ARE SHOWN IN APPROXIMATE LOCATION. IT DOES NOT IMPLY THAT A CONFLICT ANALYSIS HAS BEEN MADE. THE CONTRACTOR SHALL CONTACT THE UTILITY COORDINATING COMMITTEE AT 1-800-545-6005 OR 811 A MINIMUM OF 48 HOURS PRIOR TO CONSTRUCTION TO HAVE MAIN AND SERVICE LINES FIELD LOCATED.

- WHEN CENTERPOINT ENERGY PIPELINE MARKINGS ARE NOT VISIBLE, CALL (713) 945-8037 (7:00 A.M. TO 4:30 P.M.) FOR STATUS OF LINE LOCATION REQUEST BEFORE EXCAVATION BEGINS.
- WHEN EXCAVATING WITHIN EIGHTEEN INCHES (18") OF THE INDICATED LOCATION OF CENTERPOINT ENERGY FACILITIES, ALL EXCAVATION MUST BE ACCOMPLISHED USING NON-MECHANIZED EXCAVATION PROCEDURES.
- WHEN CENTERPOINT ENERGY FACILITIES ARE EXPOSED, SUFFICIENT SUPPORT MUST BE PROVIDED TO THE FACILITIES TO PREVENT EXCESSIVE STRESS ON THE PIPING.
- FOR EMERGENCIES REGARDING GAS LINES CALL (713) 659-3552 OR (713) 207-4200.

THE CONTRACTOR IS FULLY RESPONSIBLE FOR ANY DAMAGES CAUSED BY HIS FAILURE TO EXACTLY LOCATE AND PRESERVE THESE UNDERGROUND FACILITIES.

WARNING: OVERHEAD ELECTRICAL LINES
OVERHEAD LINES MAY EXIST ON THE PROPERTY. THE LOCATION OF OVERHEAD LINES HAS NOT BEEN SHOWN ON THESE DRAWINGS AS THE LINES ARE CLEARLY VISIBLE, BUT YOU SHOULD LOCATE THEM PRIOR TO BEGINNING ANY CONSTRUCTION. TEXAS LAW, SECTION 752, HEALTH & SAFETY CODE FORBIDS ACTIVITIES THAT OCCUR IN CLOSE PROXIMITY TO HIGH VOLTAGE LINES, SPECIFICALLY:

- ANY ACTIVITY WHERE PERSON OR THINGS MAY COME WITHIN SIX (6) FEET OF LIVE OVERHEAD HIGH VOLTAGE LINES; AND
- OPERATING A CRANE, DERRICK, POWER SHOVEL, DRILLING RIG, PILE DRIVER, HOISTING EQUIPMENT OR SIMILAR APPARATUS WITHIN 10 FEET OF LIVE OVERHEAD HIGH VOLTAGE LINES.

PARTIES RESPONSIBLE FOR THE WORK, INCLUDING CONTRACTORS, ARE LEGALLY RESPONSIBLE FOR SAFETY OF CONSTRUCTION WORKERS UNDER THIS LAW. THIS LAW CARRIES BOTH CRIMINAL AND CIVIL LIABILITY. TO ARRANGE FOR LINES TO BE TURNED OFF OR REMOVED CALL CENTERPOINT ENERGY AT 713-207-2222.

ACTIVITIES ON OR ACROSS CENTERPOINT ENERGY FEE OR EASEMENT PROPERTY
NO APPROVAL TO USE, CROSS OR OCCUPY CENTERPOINT FEE OR EASEMENT PROPERTY IS GIVEN. IF YOU NEED TO USE CENTERPOINT PROPERTY, PLEASE CONTACT OUR SURVEYING & RIGHT OF WAY DIVISION AT (713) 207-6348 OR (713) 207-5769

AT&T TEXAS / SWBT FACILITIES

1. THE LOCATIONS OF AT&T TEXAS/SWBT FACILITIES ARE SHOWN IN AN APPROXIMATE WAY ONLY. THE CONTRACTOR SHALL DETERMINE THE EXACT LOCATION BEFORE COMMENCING WORK. HE AGREES TO BE FULLY RESPONSIBLE FOR ANY AND ALL DAMAGES WHICH MIGHT BE OCCASIONED BY THIS FAILURE TO EXACTLY LOCATE AND PRESERVE THESE UNDERGROUND UTILITIES.
2. THE CONTRACTOR SHALL CALL 1-800-344-8377 (TEXAS 811) A MINIMUM OF 48 HOURS PRIOR TO CONSTRUCTION TO HAVE UNDERGROUND LINES FIELD LOCATED.
3. WHEN EXCAVATING WITHIN EIGHTEEN INCHES (18") OF THE INDICATED LOCATION OF AT&T TEXAS/SWBT FACILITIES, ALL EXCAVATIONS MUST BE ACCOMPLISHED USING NON-MECHANIZED EXCAVATION PROCEDURES. WHEN BORING, THE CONTRACTOR SHALL EXPOSE THE AT&T TEXAS/SWBT FACILITIES.
4. WHEN AT&T TEXAS/SWBT FACILITIES ARE EXPOSED, THE CONTRACTOR WILL PROVIDE SUPPORT TO PREVENT DAMAGE TO THE CONDUIT DUCTS OR CABLES. WHEN EXCAVATING NEAR TELEPHONE POLES THE CONTRACTOR SHALL BRACE THE POLE FOR SUPPORT.
5. THE PRESENCE OR ABSENCE OF AT&T TEXAS/SWBT UNDERGROUND CONDUIT FACILITIES OR BURIED CABLE FACILITIES SHOWN ON THESE PLANS DOES NOT MEAN THAT THERE ARE NO DIRECT BURIED CABLES OR OTHER CABLES IN CONDUIT IN THE AREA.
6. PLEASE CONTACT THE AT&T TEXAS DAMAGE PREVENTION MANAGER KEVIN RAY AT (713) 614-1983 OR E-MAIL HIM AT KR7896@ATT.COM IF CABLE LOCATE REQUESTS ARE NOT COMPLETED FOR OUR AT&T TEXAS/SWBT FACILITIES.

STANDARD HCFCD NOTES FOR CONSTRUCTION DRAWINGS

1. OBTAIN AND COMPLY WITH ALL APPLICABLE CITY, COUNTY, STATE, AND FEDERAL PERMITS AND APPROVALS, WITH ASSISTANCE FROM ENGINEER, IF NECESSARY. OBTAIN PERMIT (CERTIFICATION) FROM HARRIS COUNTY ENGINEER TO ENTER HARRIS COUNTY FLOOD CONTROL DISTRICT RIGHT-OF-WAY.
2. NOTIFY THE HARRIS COUNTY FLOOD CONTROL DISTRICT'S DEVELOPMENT COORDINATION AND INSPECTION DEPARTMENT IN WRITING AT LEAST 48 HOURS PRIOR TO CONSTRUCTION. SUBMIT THE HCFCD 48 HOUR PRE-CONSTRUCTION NOTIFICATION FORM, A COPY OF THE APPROVED CONSTRUCTION DRAWINGS, AND A COPY OF THE CORPS OF ENGINEERS INDIVIDUAL SECTION 404 PERMIT OR COMPLIANCE WITH NATIONWIDE PERMIT, IF APPLICABLE, TO HCFCD, 9900 NORTHWEST FREEWAY, HOUSTON, TEXAS 77092, ATTN: DEVELOPMENT COORDINATION AND INSPECTION DEPT. BY HAND DELIVERY, BY EMAIL DCID@HCFCD.ORG, OR FAX TO 713-684-4129 (FAX NUMBER).
3. ENGINEER SHALL SUBMIT CERTIFICATION LETTER AND RECORD DRAWINGS TO THE HARRIS COUNTY FLOOD CONTROL DISTRICT'S DEVELOPMENT COORDINATION AND INSPECTION SECTION REQUESTING INSPECTION OF ITEMS CONSTRUCTED IN HARRIS COUNTY FLOOD CONTROL DISTRICT RIGHT-OF-WAY. PRIOR TO REQUESTING INSPECTION, THE DRAINAGE RIGHT-OF-WAY AND/OR EASEMENTS SHALL BE STAKED AND FLAGGED.
4. PROTECT, MAINTAIN, AND RESTORE EXISTING BACKSLOPE DRAINAGE SYSTEMS.
5. BACKSLOPE SWALE AND INTERCEPTOR STRUCTURE ELEVATIONS AND LOCATIONS SHOWN ON PLANS ARE APPROXIMATE. FINAL ELEVATIONS AND LOCATIONS SHALL BE FIELD VERIFIED BY THE ENGINEER PRIOR TO INSTALLATION.
6. ESTABLISH TURF GRASS ON ALL DISTURBED AREAS WITHIN THE CHANNEL OR DETENTION RIGHT-OF-WAY, EXCEPT THE CHANNEL BOTTOM AND WHERE STRUCTURAL EROSION MEASURES ARE USED. MINIMUM ACCEPTANCE CRITERIA ARE 75% COVERAGE OF LIVE BERMUDA GRASS AND NO EROSION OR RILLS DEEPER THAN 4".
7. PERFORM ALL ACTIVITIES WITHIN HARRIS COUNTY FLOOD CONTROL DISTRICT RIGHT-OF-WAY IN ACCORDANCE WITH THE MOST RECENT HARRIS COUNTY FLOOD CONTROL DISTRICT STANDARD SPECIFICATIONS BOOK.
8. EXCAVATE CHANNEL FLOWLINE TO DESIGN ELEVATION AS SHOWN ON PLANS AND DOWNSTREAM, AS NECESSARY, TO ENSURE NO WATER REMAINS IN THE FACILITY (STORM SEWER, LATERAL CHANNEL, OR DRY BOTTOM DETENTION BASIN) DURING NORMAL WATER SURFACE CONDITIONS IN THE CHANNEL, SO THE FACILITY WILL FUNCTION AS INTENDED. FOR WET BOTTOM DETENTION BASINS, ENSURE NO WATER IS ABOVE THE DESIGN LEVEL IN THE WET BOTTOM DURING NORMAL WATER SURFACE CONDITIONS IN THE CHANNEL.
9. MAINTAIN FLOW IN CHANNEL DURING CONSTRUCTION AND RESTORE CHANNEL TO ORIGINAL CONDITION.
10. REMOVE ALL EXCAVATED MATERIAL FROM THE HARRIS COUNTY FLOOD CONTROL DISTRICT OR DRAINAGE RIGHT-OF-WAY. NO FILL IS TO BE PLACED WITHIN A DESIGNATED FLOOD PLAIN AREA WITHOUT FIRST OBTAINING A FILL PERMIT FROM THE APPROPRIATE JURISDICTIONAL AUTHORITY.

STORM CONSTRUCTION NOTES

1. STORM SEWER SHALL BE REINFORCED CONCRETE PIPE (C-76, CLASS III), AND SHALL BE INSTALLED, BEDDED, AND BACK FILLED IN ACCORDANCE WITH THE CITY OF HOUSTON DRAWING NOS. 2317-02, 02317-3, 02317-05, 02317-06, AND 02317-07 (OCT. 2002) AS APPLICABLE UNLESS OTHERWISE SHOWN ON THE DRAWINGS.
2. ALL SEWER UNDER PROPOSED OR FUTURE PAVEMENT AND TO A POINT ONE (1) FOOT BACK OF ALL PROPOSED OR FUTURE CURBS SHALL BE BACKFILLED WITH 1-1/2 SACK CEMENT/C.Y. STABILIZED SAND TO WITHIN ONE (1) FOOT OF SUBGRADE. THE REMAINING DEPTH OF TRENCH SHALL BE BACKFILLED WITH SUITABLE EARTH MATERIAL.
3. ALL TRENCH BACKFILL SHALL BE IN 8" LIFTS, WITH TESTS TAKEN AT 100 FOOT INTERVALS IN EACH LIFT, AND MECHANICALLY COMPACTED TO A DENSITY OF NOT LESS THAN 95% OF THE MAXIMUM DRY DENSITY AS DETERMINED BY THE STANDARD PROCTOR COMPACTION TEST (ASTM D-698/AASHTO T99).
4. CIRCULAR AND ELLIPTICAL REINFORCED CONCRETE PIPE SHALL BE INSTALLED USING RUBBER GASKET JOINT CONFORMING TO ASTM C443 AND ASTM C877 RESPECTIVELY.
5. ADJUST MANHOLE COVERS TO GRADE CONFORMING TO REQUIREMENTS OF SECTION 02086 – ADJUSTING MANHOLES, INLETS, AND VALVE BOXES TO GRADE.
6. THE CONTRACTOR SHALL BE RESPONSIBLE FOR PROTECTING, MAINTAINING, AND RESTORING ANY BACK SLOPE DRAINAGE SYSTEM DISTURBED AS A RESULT OF THIS WORK.
7. ALL DITCHES SHALL BE GRADED TO PROPOSED ELEVATIONS TO INSURE PROPER DRAINAGE. ALL OUTFALLS SHALL BE PROPERLY BACKFILLED AND COMPACTED. ALL DISTURBED AREA SHALL BE REGRADED, SEEDED, AND FERTILIZED.

GRADING NOTES

1. GENERAL CONTRACTOR AND ALL SUBCONTRACTORS SHALL VERIFY THE SUITABILITY OF ALL EXISTING AND PROPOSED SITE CONDITIONS INCLUDING GRADES AND DIMENSIONS BEFORE STARTING CONSTRUCTION. THE ENGINEER SHALL BE NOTIFIED IMMEDIATELY OF ANY DISCREPANCIES.
2. BEFORE STARTING CONSTRUCTION, CONTRACTOR SHALL VERIFY BENCHMARK ELEVATION AND NOTIFY ENGINEER IF ANY DISCREPANCY AND/OR CONFLICT IS FOUND.
3. CONTRACTOR SHALL ENSURE THERE IS POSITIVE DRAINAGE FROM THE PROPOSED BUILDINGS AND NO PONDING IN PAVED AREAS, AND SHALL NOTIFY ENGINEER IF ANY GRADING DISCREPANCIES ARE FOUND IN THE EXISTING AND PROPOSED GRADES PRIOR TO PLACEMENT OF PAVEMENT OR UTILITIES.
4. CONTRACTOR SHALL PROTECT ALL MANHOLE COVERS, VALVE COVERS, VAULT LIDS, FIRE HYDRANTS, POWER POLES, GUY WIRES, AND TELEPHONE BOXES THAT ARE TO REMAIN IN PLACE AND UNDISTURBED DURING CONSTRUCTION.
5. ALL EXISTING CONCRETE PAVING, SIDEWALK, AND CURB DEMOLITION SHALL BE REMOVED AND DISPOSED OF BY CONTRACTOR. DISPOSAL SHALL BE AT AN APPROVED OFF-SITE, LAWFUL LOCATION, UNLESS DIRECTED OTHERWISE BY THE OWNER.

WATER LINE NOTES

1. WATER LINES SHALL BE CONSTRUCTED IN ACCORDANCE WITH THE LATEST CITY OF HOUSTON INFRASTRUCTURE DESIGN MANUAL, STANDARD SPECIFICATION, AND CONSTRUCTION DETAILS.

WORK SEQUENCE

CONSTRUCT THE WORK IN PHASES DURING THE CONSTRUCTION PERIOD; COORDINATE CONSTRUCTION SCHEDULE AND OPERATIONS WITH THE CITY. ALL SCHEDULING AND COORDINATION SHALL BE SUBMITTED AND PRESENTED TO CITY CONSTRUCTION PROJECT MANAGER.

1. THE CONTRACTOR IS ALLOWED TO WORK ON TWO (2) SITES SIMULTANEOUSLY.
2. CONSTRUCTION SHALL BEGIN WITH THE WCID #78 LIFT STATION FIRST AND THIS SITE SHALL BE SUBSTANTIALLY COMPLETED BY JUNE, 2022.
3. CONTRACTOR SHALL BE PARTIALLY SUBSTANTIALLY COMPLETED AT ONE SITE BEFORE MOVING TO ANOTHER SITE.
4. FULL SUBSTANTIAL COMPLETION FOR THE ENTIRE PROJECT WILL BE GIVEN UPON COMPLETION OF THE FOURTH (FINAL) SITE.

TRAFFIC NOTES

1. CONTRACTOR OR OWNER SHALL SUBMIT TRAFFIC CONTROL PLANS WITH THE MOBILITY PERMIT APPLICATION. THE PLANS SHALL BE DRAWN TO SCALE AND SEALED BY A LICENSED PROFESSIONAL ENGINEER IN THE STATE OF TEXAS.
2. THE GENERAL NOTES THAT SHALL BE INCLUDED ON THE TRAFFIC CONTROL PLAN CAN BE FOUND IN CHAPTER 15 (15.12 TRAFFIC CONTROL PLAN) OF THE CITY OF HOUSTON'S (CITY) INFRASTRUCTURE DESIGN MANUAL (IDM). BELOW ARE SEVERAL KEY NOTES FROM THE IDM TO BE AWARE OF:
3. THE CONTRACTOR SHALL PROVIDE AND INSTALL TRAFFIC CONTROL DEVICES IN CONFORMANCE WITH PART VI OF THE TEXAS MANUAL ON UNIFORM TRAFFIC CONTROL DEVICES (TMUTCD) LATEST EDITION WITH REVISIONS DURING THE ENTIRE CONSTRUCTION PERIOD.
4. NO WORK SHALL BE PERFORMED IN RESIDENTIAL AREAS FROM 7:00PM TO 7:00AM.
5. CONTRACTOR SHALL MAINTAIN APPROVED NUMBER OF LANES OF TRAFFIC IN EACH DIRECTION DURING CONSTRUCTION WORKING HOURS. TRAFFIC CONTROL PLANS SHALL INCLUDE ONE-WAY AND/OR DETOUR PLANS. CONTRACTOR SHALL MAINTAIN ADA COMPLIANT PEDESTRIAN ACCESS TO BUS STOPS AND ADEQUATE BUS ACCESS TO THE BUS STOP.
6. CONTRACTOR SHALL COVER OPEN PAVEMENT EXCAVATIONS FOR MINOR UTILITY WORK WITH ANCHORED STEEL PLATES DURING NON-WORKING HOURS, OPEN LANES FOR NORMAL TRAFFIC FLOW WHEN FEASIBLE.
7. CONTRACTOR SHALL SECURE LANE/SIDEWALK/BICYCLE FACILITY CLOSURE PERMITS FROM TRANSPORTATION & DRAINAGE OPERATIONS (MOBILITY PERMIT SECTION AT WWW.GIMS.HOUSTONTX.GOV) BEFORE IMPLEMENTING THE TRAFFIC CONTROL PLAN. THE APPLICATION MUST BE SUBMITTED AT LEAST TEN BUSINESS DAYS PRIOR TO THE IMPLEMENTATION OF THE TRAFFIC CONTROL PLAN AND/OR BEGINNING CONSTRUCTION WORK. THE CONTRACTOR SHALL PROVIDE TRAFFIC CONTROL PLANS, CONSTRUCTION SEQUENCING, AND CONSTRUCTION SCHEDULE WITH THE APPLICATION.
8. CONTRACTOR SHALL HAVE APPROVED TRAFFIC CONTROL PLAN AND PERMIT AT THE JOB SITE FOR INSPECTION AT ALL TIMES
9. ACCESS TO DRIVEWAYS ADJACENT TO THE CONSTRUCTION WORK ZONE SHALL BE MAINTAINED AT ALL TIMES AS MUCH AS POSSIBLE. ADDITIONAL CONES AND/OR DELINEATORS MAY BE REQUIRED TO DELINEATE THE DRIVEWAY ACCESS ROUTE THROUGH THE CONSTRUCTION WORK ZONE. A MINIMUM OF ONE TRAVEL LANE SHALL BE MAINTAINED ACROSS THE DRIVEWAY, UNLESS PRIOR WRITTEN APPROVAL IS OBTAINED FROM THE CITY OF HOUSTON.
10. ADDITIONAL OFF DUTY POLICE OFFICERS/FLAGGERS MAY BE REQUESTED TO DIRECT TRAFFIC WHEN LANES ARE BLOCKED AT THE DIRECTION OF THE CITY EVEN IF THEY ARE NOT SPECIFICALLY IDENTIFIED ON THE PROJECT PLANS.

GENERAL NOTES – METRO:

1. CONTRACTOR SHALL NOTIFY METRO AT 713-615-6195 TWO WEEKS PRIOR TO DISTURBING EXISTING BUS STOPS.
2. CONTRACTOR SHALL COORDINATE WITH METRO TO REMOVE EXISTING AMENITIES.
3. BUS STOPS SHALL BE CONSTRUCTED PER CITY OF HOUSTON INFRASTRUCTURE DESIGN MANUAL AND MEET CURRENT ADA REQUIREMENTS.

STORMWATER POLLUTION PREVENTION PLAN CONSTRUCTION NOTES

1. CONTRACTOR SHALL IMPLEMENT INLET PROTECTION DEVICES AND REINFORCED FILTER FABRIC BARRIER ALONG ROAD AND SIDE DITCHES AT LOCATIONS SHOWN ON THE TYPICAL STORM WATER POLLUTION PREVENTION (SWPP) PLANS TO KEEP SILT AND OR EXCAVATED MATERIALS FROM ENTERING INTO THE STORM WATER INLETS AND DITCHES EVENTUALLY POLLUTING THE RECEIVING STORM.
2. D

PLOTTED: 12/17/2025 7:52 AM

ABBREVIATIONS:

&	AND
@	AT
AB	ALL BELL
AC	ACRE / ASBESTOS CEMENT
AI/VR	AIR INLET / VACUUM RELIEF
APPROX	APPROXIMATELY
ASPH	ASPHALT
AVE	AVENUE
BL	BASELINE
B/B	BACK TO BACK
BC	BACK OF CURB
BFV	BUTTERFLY VALVE
BL	BUILDING LINE
BLDG	BUILDING
BLVD	BOULEVARD
CL	CENTER LINE
C/C	CENTER TO CENTER
CGMP	CORRUGATED GALVANIZED METAL PIPE
CMP	CORRUGATED METAL PIPE
CIP	CAST IRON PIPE
CLR	CLEARANCE
CO	CLEAN OUT
COH	CITY OF HOUSTON
CONC	CONCRETE
CONSTR	CONSTRUCTION
CPEE	CENTERPOINT ENERGY ELECTRIC
CPEG	CENTERPOINT ENERGY GAS
DIA	DIAMETER
DIP	DUCTILE IRON PIPE
DR	DRIVE
DWG	DRAWING
DWY	DRIVEWAY
E	EAST
EAP	EMERGENCY ACTION PLAN
EL	ELEVATION
EP	EDGE OF PAVEMENT
E/R	END OF RADIUS
ESMT	EASEMENT
EXST	EXISTING
FC	FACE OF CURB
F/F	FACE TO FACE
FH	FIRE HYDRANT
FL	FLOW LINE
FM	FORCE MAIN
FRP	FIBERGLASS–REINFORCED PLASTIC
FT	FEET
GPS	GLOBAL POSITIONING SYSTEM
GV	GATE VALVE
GV&B	GATE VALVE AND BOX
HCFCD	HARRIS COUNTY FLOOD CONTROL DISTRICT
HDPE	HIGH–DENSITY POLYETHYLENE
HGL	HYDRAULIC GRADE LINE
HP	HIGH PRESSURE
INV EL	INVERT ELEVATION
IP	INTERMEDIATE PRESSURE
IR	IRON ROD

ABBREVIATIONS:

J–BOX	JUNCTION BOX
JT	JOINT
JUNCT	JUNCTION
LDWL	LARGE DIAMETER WATER LINE
LF	LINEAR FEET
LN	LANE
LPT	LOW POINT
LS	LIFT STATION
LT	LEFT
MAX	MAXIMUM
METRO	METROPOLITAN TRANSIT AUTHORITY
MH	MANHOLE
MIN	MINIMUM
MON	MONUMENT
N	NORTH
NA	NOT APPLICABLE
NAVD	NORTH AMERICAN VERTICAL DATUM
NG	NATURAL GROUND
NO	NUMBER
NOTAM	NOTICE TO AIR MISSIONS
NTS	NOT TO SCALE
OCC	ZERO CURB CUT
OS	OFFSET
OH	OVERHEAD
PC	POINT OF CURVE
PCC	POINT OF COMPOUND CURVATURE
PCCP	PRESTRESSED CONCRETE CYLINDER PIPE
PERM	PERMANENT
PGL	PROFILE GRADE LINE
PI	POINT OF INTERSECTION
PL	PROPERTY LINE
PNT	POINT
PPCA	POTENTIALLY PETROLEUM CONTAMINATED AREA
PRC	POINT OF REVERSE
PROP	PROPOSED
PSI	POUND PER SQUARE INCH
PT	POINT OF TANGENCY
PVC	POLYVINYL CHLORIDE PIPE / POINT OF VERTICAL CURVATURE
PVMT	PAVEMENT
PVI	POINT OF VERTICAL INTERSECTION
PVT	POINT OF VERTICAL TANGENCY

ABBREVIATIONS:

⟨R⟩	RECORD DRAWING
R	RADIUS
RCB	REINFORCED CONCRETE BOX
RCP	REINFORCED CONCRETE PIPE
RD	ROAD
REINF	REINFORCED
REM	REMOVABLE
RJ	RESTRAINED JOINT
ROW	RIGHT OF WAY
RR	RAILROAD
RRPM	REFLECTIVE REMOVABLE PAVEMENT MARKERS
RT	RIGHT
S	SOUTH
SAN	SANITARY
SCHED	SCHEDULE
SF	SQUARE FEET
SHT	SHEET
SSE	SANITARY SEWER EASEMENT
ST	STREET
STA	STATION
STD	STANDARD
STL	STEEL
STM	STORM
SWBT	SOUTHWESTERN BELL TELEPHONE
SWR	SEWER
SY	SQUARE YARD
TAN	TANGENT
TBM	TEMPORARY BENCHMARK
TEMP	TEMPORARY
TOB	TOP OF BANK
TOC	TOP OF CURB
TOP	TOP OF PAVEMENT
TOS	TOP OF STACK
TS&V	TAPPING SLEEVE AND VALVE
TXDOT	TEXAS DEPARTMENT OF TRANSPORTATION
TYP	TYPICAL
UE	UTILITY EASEMENT
UGND	UNDERGROUND
VC	VERTICAL CURVE
VPI	VERTICAL POINT OF INTERSECTION
W	WEST
W/	WITH
WL	WATER LINE
WLE	WATER LINE EASEMENT
WM	WATER METER
WP	WOOD POLE
WSEL	WATER SURFACE ELEVATION
WV	WATER VALVE
WWTP	WASTE WATER TREATMENT PLANT

NO.	DATE	REVISION	APP.

NOTICE:
FOR YOUR SAFETY, YOU ARE REQUIRED BY TEXAS LAW TO CALL 811 AT LEAST 48 HOURS BEFORE YOU DIG SO THAT UNDERGROUND LINES CAN BE MARKED. THIS SIGNATURE DOES NOT FULFILL YOUR OBLIGATION TO CALL 811

VERIFICATION OF PRIVATE UTILITY LINES

Date

CenterPoint Energy natural gas utilities shown. (Gas service lines are not shown). This signature not be used for conflict verification.

Signature valid for six months.

Date

CenterPoint Energy/UNDERGROUND Electrical Facilities Verification ONLY. (This signature verifies existing underground facilities – not to be used for conflict verification)

Signature valid for six months.

Date

Approved for AT&T underground conduit facilities only.
Signature valid for one year.

IDS Engineering Group
13430 NW. Freeway, Suite 700
Houston, Tx. 77040
713.462.3178
TxEng Firm 2726 | TxSurv Firm 10110700

SURVEYED BY: KUO & ASSOCIATES, INC.
TBPE FIRM #F-4578; TBPLS FIRM #1007560

THIS DOCUMENT IS RELEASED FOR THE PURPOSE OF REVIEW UNDER THE AUTHORITY OF MARCEL KHOUW, P.E. 101807 ON 12/17/2025. IT IS NOT TO BE USED FOR CONSTRUCTION PURPOSES.

CITY OF HOUSTON
HOUSTON PUBLIC WORKS

LIFT STATION RENEWAL AND REPLACEMENT FY 2023

ABBREVIATIONS

WBS NUMBER	FOR CITY OF HOUSTON USE ONLY
R–000267–0179–4	
DRAWING SCALE	
HORIZ: N/A VERT: N/A	
CITY OF HOUSTON PM	
NAWARAJ PANTA, P.E.	
DWG. NO. G–04	SHEET NO. 04 OF 321

FILE PATH: \\idseg.com\FS\Projects\0000\005708500 CoH Lift Stations – FY 2023\CAD\DWG\PRODUCTION\04–ABBREVIATIONS.dwg

PLOTTED: 12/17/2025 7:52 AM

EXISTING PLAN VIEW

- WATER METER
- WATER VALVE (GATE)
- WATER VALVE (BUTTERFLY)
- FIRE HYDRANT/FLUSHING VALVE
- TAPPING SLEEVE & VALVE
- REDUCER (8" W / 6" W)
- ROUND CONNECTION
- SANITARY SEWER CLEANOUT & MANHOLE (CO, SAN, SAN MH)
- STORM SEWER MANHOLE (STM, STM MH)
- STORM SEWER INLETS ('B', 'B–B', 'C', 'C–1', 'C–2', 'C–2A', 'GRATE')
- CULVERT PIPE AND HEADWALL
- TOP OF CURB ELEVATION (TC=XX.XX)
- GUTTER ELEVATION (G=XX.XX)
- TOP OF PAVEMENT ELEVATION (TP=XX.XX)
- CONTOUR LINE (XX.X')
- ROW LINE
- PROPERTY LINE
- LOT LINES
- EASEMENT LINE
- CENTER LINE OF ROW
- TRANSIT LINE
- EDGE OF DITCHES
- CENTER LINE OF DITCHES
- EDGE OF DITCHES
- FENCE LINE, WOOD
- FENCE LINE, CHAIN LINK
- FENCE LINE, BARBED WIRE
- FENCE LINE, HOG WIRE
- EDGE OF CONCRETE
- CURB LINE
- CONCRETE WALK
- EDGE OF ASPHALT
- EDGE OF SHELL OR GRAVEL
- DIMENSION LINE (28", 3–17)
- AERIAL POWER LINE
- UNDERGROUND POWER LINE (UGP)
- GAS LINE (GAS)
- UNKNOWN UNDERGROUND LINE (MISC)
- OIL PIPELINE (IDENTIFY CONDUIT, OGP)
- UNDERGROUND TELECOMM LINE W/VAULT (UGT)
- AERIAL TELECOMM LINE (T)
- RAILROAD LINE
- WATER LINE (20" (AND SMALLER) WATER; 24" (LARGER THAN 20") WATER; LDWL)
- SANITARY SEWER LINE (24" (AND SMALLER) SANITARY SEWER; 30" (LARGER THAN 24") SANITARY SEWER; SAN)
- STORM SEWER LINE (24" (AND SMALLER) STORM SEWER; 30" (LARGER THAN 24") STORM SEWER; STM)
- SANITARY SEWER FORCE MAIN (FM)
- RECLAIMED WATER LINE (RWL)
- NON–POTABLE WATER LINE (NPW)
- GAS METER
- GAS VALVE
- PROPANE LINE (PROPANE)
- STEAM LINE (STEAM)
- MISC UNDERGROUND PIPELINE LABLE (A2)

PROPOSED PLAN VIEW

- WATER METER (WM)
- WATER VALVE (GATE) (WV)
- WATER VALVE (BUTTERFLY) (BFWV)
- FIRE HYDRANT/FLUSHING VALVE (FH, WV)
- TAPPING SLEEVE & VALVE (TS&V)
- REDUCER (12" / 8")
- ROUND CONNECTION
- SANITARY SEWER CLEANOUT & MANHOLE (CO, SAN MH)
- STORM SEWER MANHOLE (STM MH)
- STORM SEWER INLETS ('B', 'B–B', 'C', 'C–1', 'C–2', 'C–2A', 'GRATE')
- CULVERT PIPE AND HEADWALL
- TOP OF CURB ELEVATION
- GUTTER ELEVATION
- TOP OF PAVEMENT ELEVATION
- CONTOUR LINE
- ROW LINE
- PROPERTY LINE
- LOT LINES
- EASEMENT LINE
- CENTER LINE OF ROW
- TRANSIT LINE
- EDGE OF DITCHES
- CENTER LINE OF DITCHES
- EDGE OF DITCHES
- FENCE LINE, WOOD
- FENCE LINE, CHAIN LINK
- FENCE LINE, BARBED WIRE
- FENCE LINE, HOG WIRE
- EDGE OF CONCRETE
- CURB LINE
- CONCRETE WALK
- EDGE OF ASPHALT
- EDGE OF SHELL OR GRAVEL
- DIMENSION LINE (28", 3–17)
- AERIAL POWER LINE
- UNDERGROUND POWER LINE (UGP)
- GAS LINE (GAS)
- UNKNOWN UNDERGROUND LINE (MISC)
- OIL PIPELINE (IDENTIFY CONDUIT, OGP)
- UNDERGROUND TELCOMM LINE W/ VAULT (UGT)
- AERIAL TELECOMM LINE (T)
- RAILROAD LINE
- WATER LINE (20" (AND SMALLER) WATER; 24" (LARGER THAN 20") WATER; LDWL)
- SANITARY SEWER LINE (24" (AND SMALLER) SANITARY SEWER; 30" (LARGER THAN 24") SANITARY SEWER)
- STORM SEWER LINE (24" (AND SMALLER) STORM SEWER; 30" (LARGER THAN 24") STORM SEWER)
- SANITARY SEWER FORCE MAIN (FM)
- RECLAIMED WATER LINE (RWL)
- NON–POTABLE WATER LINE (NPW)
- GAS METER
- GAS VALVE
- PROPANE LINE (PROPANE)
- STEAM LINE (STEAM)
- MISC UNDERGROUND PIPELINE LABLE (A2)
- MATCH LINE

EXISTING PLAN VIEW

- PAVING HEADER
- BUILDING, RESIDENTIAL (RES. 1–STORY BR BLDG.)
- BUILDING, COMMERCIAL (COMM. 1–STORY BR BLDG.)
- TREE
- HEDGE
- IRON PIPE OR IRON ROD MONUMENT (3/4" IP)
- POINT OF INTERSECTION (PI)
- POINT OF CURVE (PC)
- POINT OF TANGENCY (PT)
- POWER POLE (P)
- POWER POLE W/DOWN GUY (P)

EXISTING PROFILE VIEW

- NORTH OR EAST PROPERTY LINE
- SOUTH OR WEST PROPERTY LINE
- NORTH OR EAST CURB
- SOUTH OR WEST CURB
- NORTH OR EAST DITCH
- SOUTH OR WEST DITCH
- NORTH OR EAST NATURAL GROUND
- SOUTH OR WEST NATURAL GROUND
- NORTH OR EAST CULVERT (CULVERT)
- SOUTH OR WEST CULVERT (CULVERT)
- CENTERLINE OF ROW
- CENTERPOINT ENERGY CONDUIT (UGP)
- GAS LINE (GAS)
- WESTERN UNION (OGP)
- AT&T CONDUIT (UGT)
- WATER LINE (20" (AND SMALLER) WATER; 24" (LARGER THAN 20") WATER; W)
- SANITARY SEWER LINE (24" (AND SMALLER) SANITARY SEWER; 30" (LARGER THAN 24") SANITARY SEWER; SAN)
- STORM SEWER LINE (24" (AND SMALLER) STORM SEWER; 30" (LARGER THAN 24") STORM SEWER; STM)
- SANITARY SEWER FORCE MAIN (FM)
- RECLAIMED WATER LINE (RWL)
- NON–POTABLE WATER LINE (NPW)
- CENTERPOINT ENERGY MANHOLE
- AT&T MANHOLE
- WATER LINE MANHOLE (W)
- SANITARY SEWER MANHOLE & CLEANOUT
- STORM SEWER MANHOLE
- STORM SEWER INLET

PROPOSED PLAN VIEW

- PAVING HEADER
- BUILDING, RESIDENTIAL (RES. 1–STORY BR BLDG.)
- BUILDING, COMMERCIAL (COMM. 1–STORY BR BLDG.)
- TREE
- HEDGE
- IRON PIPE OR IRON ROD MONUMENT (3/4" IP)
- POINT OF INTERSECTION (PI)
- POINT OF CURVE (PC)
- POINT OF TANGENCY (PT)
- POWER POLE (P)
- POWER POLE W/DOWN GUY (P)

PROPOSED PROFILE VIEW

- NORTH OR EAST PROPERTY LINE
- SOUTH OR WEST PROPERTY LINE
- NORTH OR EAST CURB
- SOUTH OR WEST CURB
- NORTH OR EAST DITCH
- SOUTH OR WEST DITCH
- NORTH OR EAST NATURAL GROUND
- SOUTH OR WEST NATURAL GROUND
- NORTH OR EAST CULVERT (CULVERT)
- SOUTH OR WEST CULVERT (CULVERT)
- CENTERLINE OF ROW
- CENTERPOINT ENERGY CONDUIT (UGP)
- GAS LINE (GAS)
- WESTERN UNION (OGP)
- AT&T CONDUIT (UGT)
- WATER LINE (20" (AND SMALLER) WATER; 24" (LARGER THAN 20") WATER; W)
- SANITARY SEWER LINE (24" (AND SMALLER) SANITARY SEWER; 30" (LARGER THAN 24") SANITARY SEWER; SAN)
- STORM SEWER LINE (24" (AND SMALLER) STORM SEWER; 30" (LARGER THAN 24") STORM SEWER; STM)
- SANITARY SEWER FORCE MAIN (FM)
- RECLAIMED WATER LINE (RWL)
- NON–POTABLE WATER LINE (NPW)
- CENTERPOINT ENERGY MANHOLE
- AT&T MANHOLE
- WATER LINE MANHOLE (W)
- SANITARY SEWER MANHOLE & CLEANOUT
- STORM SEWER MANHOLE
- STORM SEWER INLET

MISC STANDARD ELEMENTS

- NORTH ARROW (N, W, E, S)
- BAR SCALE (20' 0' 20', SCALE 1"=20')
- REVISION CLOUD/DELTA (1)

NO.	DATE	REVISION	APP.

NOTICE:
FOR YOUR SAFETY, YOU ARE REQUIRED BY TEXAS LAW TO CALL 811 AT LEAST 48 HOURS BEFORE YOU DIG SO THAT UNDERGROUND LINES CAN BE MARKED. THIS SIGNATURE DOES NOT FULFILL YOUR OBLIGATION TO CALL 811

VERIFICATION OF PRIVATE UTILITY LINES

Date

CenterPoint Energy natural gas utilities shown. (Gas service lines are not shown). This signature not be used for conflict verification.

Signature valid for six months.

Date

CenterPoint Energy/UNDERGROUND Electrical Facilities Verification ONLY. (This signature verifies existing underground facilities – not to be used for conflict verification)

Signature valid for six months.

Date

Approved for AT&T underground conduit facilities only.
Signature valid for one year.

IDS Engineering Group
13430 NW. Freeway, Suite 700
Houston, Tx. 77040
713.462.3178
TxEng Firm 2726 | TxSurv Firm 10110700

SURVEYED BY: KUO & ASSOCIATES, INC.
TBPE FIRM #F–4578; TBPLS FIRM #1007560

THIS DOCUMENT IS RELEASED FOR THE PURPOSE OF REVIEW UNDER THE AUTHORITY OF MARCEL KHOUW, P.E. 101807 ON 12/17/2025. IT IS NOT TO BE USED FOR CONSTRUCTION PURPOSES.

CITY OF HOUSTON
HOUSTON PUBLIC WORKS

LIFT STATION RENEWAL AND REPLACEMENT FY 2023

SYMBOLS LEGEND

WBS NUMBER	FOR CITY OF HOUSTON USE ONLY
R–000267–0179–4	
DRAWING SCALE	
HORIZ: N/A VERT: N/A	
CITY OF HOUSTON PM	
NAWARAJ PANTA, P.E.	
SHEET NO. 05 OF 321	

DWG. NO. G–05

FILE PATH: \\idseg.com\FS\Projects\0000\005708500 CoH Lift Stations – FY 2023\CAD\DWG\PRODUCTION\05–SYMBOLS LEGEND.dwg

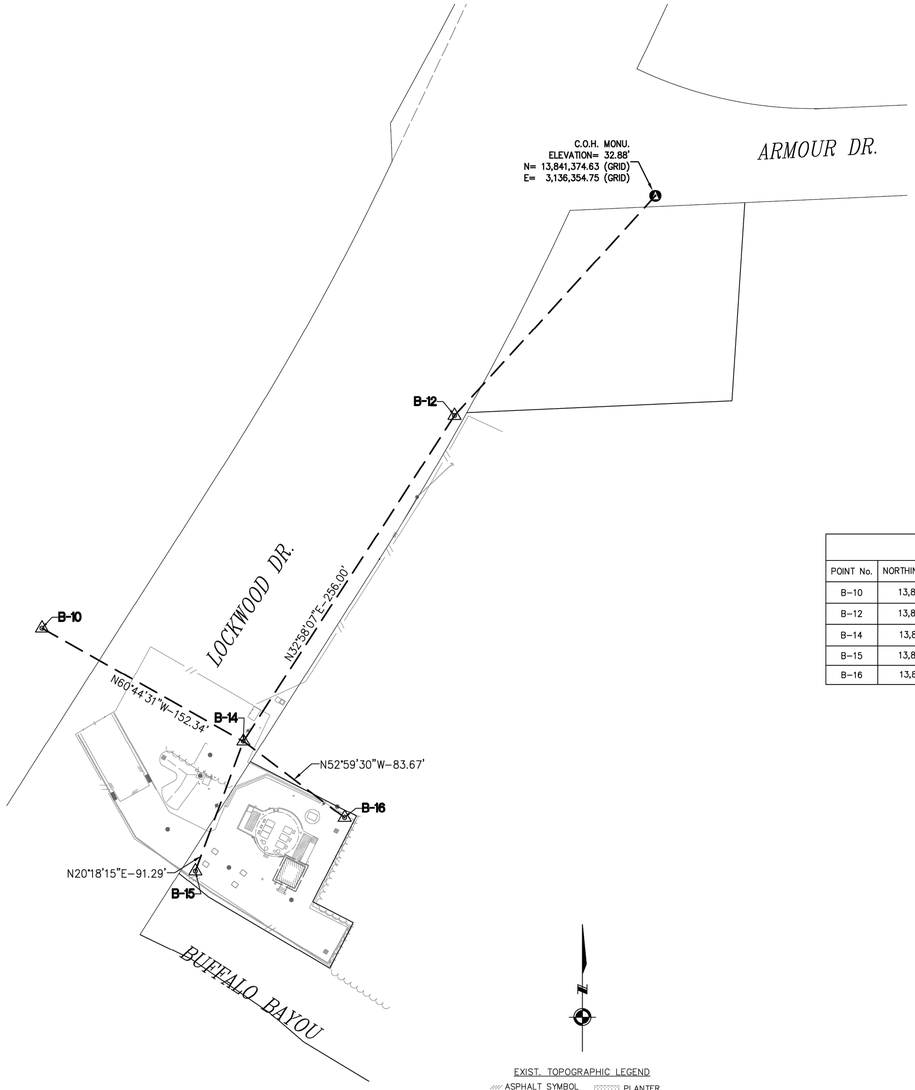

SURVEY BASELINE POINTS DATA (TEMPORARY BENCHMARK)						
POINT No.	NORTHING (SURFACE)	EASTING (SURFACE)	NORTHING (GRID)	EASTING (GRID)	ELEVATION	DESCRIPTION
B-10	13,842,888.63	3,136,357.70	13,841,089.29	3,135,950.02	22.00'	SET MAGNAIL W/SHINER
B-12	13,843,028.95	3,136,629.91	13,841,229.60	3,136,222.20	33.64'	SET 1/2" I.R. W/CAP
B-14	13,842,814.18	3,136,490.60	13,841,014.85	3,136,082.91	31.86'	SET 1/2" I.R. W/CAP
B-15	13,842,728.56	3,136,458.92	13,840,929.24	3,136,051.23	18.48'	SET 'X' CUT ON CONC.
B-16	13,842,763.81	3,136,557.41	13,840,964.49	3,136,149.71	18.94'	SET 'X' CUT ON CONC.

CITY OF HOUSTON

CITY SURVEY
SITE CONTROL MONUMENT

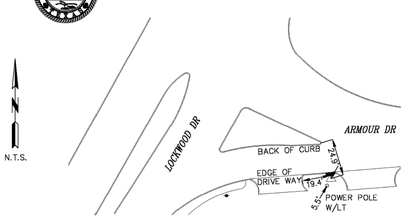

Project WBS# R-000267-0179-3
Texas Coordinate System of 1983,
South Central Zone, U. S. Survey Feet
X= 3,136,354.7473
Y= 13,841,374.6250
Lat.= 29° 45' 27.2031" (N)
Lon.= 95° 19' 07.1144" (W)
Reference Frame Used: NAD '83 (2011) (EPOCH: 2010)
Vertical Adjustment used: NAVD '88
General Location: ON SOUTH WEST SIDE OF ARMOUR DR AND LOCKWOOD INTERSECTION ON TOP OF B INLET
Date Set: 11-13-2025 Type of Mark: 1A

Keymap Page: 494Q
Orthometric Elevation =32.88 FEET
Ellipsoid Height= -56.7199
Geoid: GEOID '18
Datum Source & Adjustment: GPS STATIC (OBSERVED ON 11-13-2025)

3 Nearest project control points (bearings and distances stated below):
1 S 45° 37' 32" E 38.66'
2 S 54° 48' 57" W 495.26'
2 S 34° 16' 25" W 539.03'

NOTE:
1. Coordinates are shown in grid
2. Scale Factor = (S.F. 0.999870017)
3. Surface= Grid / S.F.

Surveyed By: Kuo & Associates, Inc.
10300 Westoffice Dr., Suite 800
Houston, TX 77042

City of Houston, Harris County, Texas

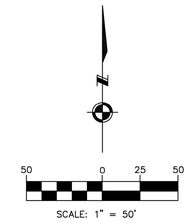

NO.	DATE	REVISION	APP.

BENCHMARK:

CITY OF HOUSTON MONUMENT ____-_____ IS AN ALUMINUM DISK ON TOP OF INLET LOCATED ON HICKORY CREEK DR APPROXIMATELY 50 FEET EAST FROM THE INTERSECTION OF TRAILWOOD VILLAGE DR

ELEV. 40.68 FEET NAVD 1988, 2001 AJUSTMENT (PROJECT DATUM)
ELEV. 32.88 FEET NAVD 1988, (GEOID '18)*

* OBSERVED BY GPS SURVEYING AND PROCESSED IN REFERENCE TO THE CORS DATED OCTOBER 17, 2025.

VERTICAL DATUM ADJUSTMENT:

THE ELEVATION DIFFERENCE IN BETWEEN THE FLOODPLAIN REFERENCE MARK'S (RM 070375)PUBLISHED DATUM NAVD 1988, 2001 ADJUSTMENT AND DATUM NAVD 1988, (GEOID '18) IS 0.48'.

NAVD 1988, 2001 ADJ. ELEVATION
= NAVD 1988 (GEOID '18) ELEVATION + 7.80 FT

NOTE:

ALL BEARINGS AND DISTANCES ARE BASED ON TEXAS STATE PLANE COORDINATE SYSTEM, SOUTH CENTRAL ZONE NO. 4204, NAD83. ALL DISTANCES ARE IN SURFACE.

THE COORDINATES SHOWN HEREON ARE TEXAS SOUTH CENTRAL ZONE NO. 4204 STATE PLANE GRID COORDINATES (NAD83) AND MAY BE BROUGHT TO SURFACE BY DIVIDING BY THE COMBINED SCALE FACTOR 0.999870017.

LEGEND:

B-X	SURVEY CONTROL POINT NUMBER
C-X	DESIGN BASELINE POINT NUMBER
⚠	SURVEY CONTROL POINT
•	DESIGN BASELINE POINT
⚠	CITY OF HOUSTON MONUMENT
S. BL:	SURVEY BASELINE

EXIST. TOPOGRAPHIC LEGEND

ASPHALT SYMBOL	PLANTER
B OR BB INLET	POWER POLE
BUSH	POWER POLE W/LT.
C INLET	SIGN
CLEANOUT	SIGNAL POLE
brick column	SPRINKLER VALVE
DOWN GUY	SPRINKLER HEAD
E INLET	STREET LIGHT/FLOOD LIGHT
ELEC MANHOLE	STREET LIGHT/PARKING LIGHT
FIRE HYDRANT	TREE
GAS METER	TREE STUMP
GAS VALVE	TREE-CREPE MYRTLE
GATE	TREE-PINE
GRATE INLET	WATER METER
GRATE INLET	WATER VALVE
MAIL BOX	IRRIGATION CONTROL VALVE
STORM MANHOLE	
SANITARY MANHOLE	

ABBREVIATIONS

BC – BACK OF CURB
EA – EDGE OF ASPHALT
EC – EDGE OF CONCRETE
EG – EDGE OF GRAVEL
FH – FIRE HYDRANT
FC – FENCE CORNER
LT – LIGHT POLE
MB – MAIL BOX
MH – MANHOLE
PP – POWER POLE
PP/LIGHT – POWER POLE W/LIGHT
STLT – STREET LIGHT
TRLT – TRAFFIC LIGHT
WM – WATER METER

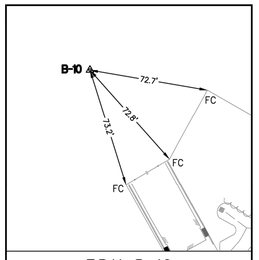

T.B.M. B-10
N.T.S.

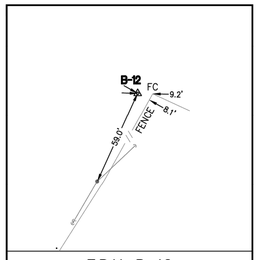

T.B.M. B-12
N.T.S.

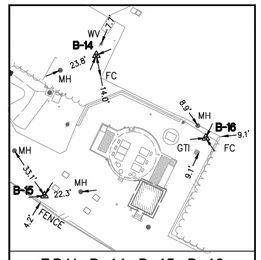

T.B.M. B-14, B-15, B-16
N.T.S.

IDS Engineering Group
13430 NW. Freeway
Suite 700
Houston, Tx. 77040
713.462.3178
TxEng Firm 2726
TxSurv Firm 10110700

KUO & ASSOCIATES
ENGINEERING + SURVEYING
10300 Westoffice Dr., Suite 800, Houston, Texas 77042
Tel: 713-975-8769, Fax: 713-975-0920, www.kuoassociates.com
TBPELS Firm Registration No. F-4578
TBPELS Firm Registration No. 1007560

THIS DOCUMENT IS RELEASED FOR THE PURPOSE OF INTERIM REVIEW UNDER THE AUTHORITY OF
KUTUBUL A. M. MAINUDDIN, R.P.L.S.
TEXAS REG. NO.: 6404
ON 12/08/2025
IT IS NOT TO BE USED FOR PERMIT, BIDDING OR CONSTRUCTION PURPOSES

CITY OF HOUSTON
HOUSTON PUBLIC WORKS

COH LS REHABILITATION AND RECONSTRUCTION
LOCKWOOD DRIVE LS
SURVEY CONTROL MAP

WBS NUMBER	FOR CITY OF HOUSTON USE ONLY
R-000267-0178-3	
DRAWING SCALE	
1"=100'	
CITY OF HOUSTON PM	
DWG. NO.	
G-06	SHEET NO. 06 OF 321

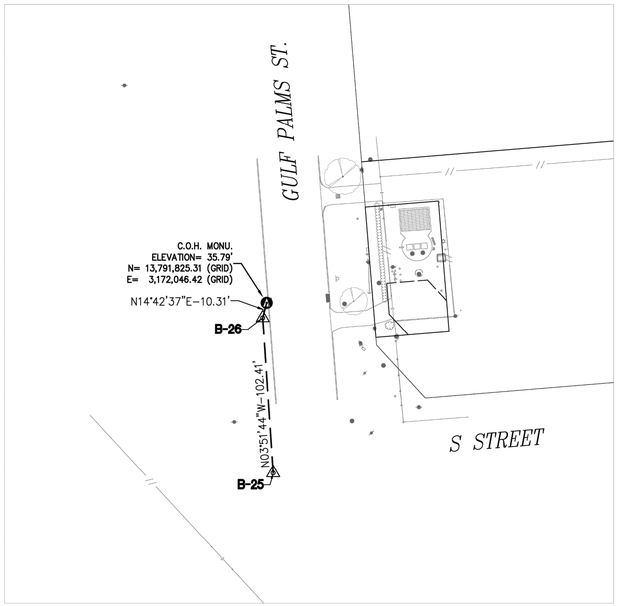

SURVEY BASELINE POINTS DATA (TEMPORARY BENCHMARK)						
POINT No.	NORTHING (SURFACE)	EASTING (SURFACE)	NORTHING (GRID)	EASTING (GRID)	ELEVATION	DESCRIPTION
B-25	13,793,506.09	3,172,463.06	13,791,713.17	3,172,050.70	36.67'	SET "X" CUT ON CONC.
B-26	13,793,608.27	3,172,456.16	13,791,815.34	3,172,043.80	36.13'	SET 5/8" I.R. W/CAP

CITY OF HOUSTON

CITY SURVEY
SITE CONTROL MONUMENT

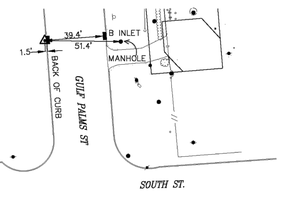

Project WBS# R-000267-0179-3
Texas Coordinate System of 1983, South Central Zone, U. S. Survey Feet
X= 3,172,046.4152
Y= 13,791,825.3060
Lat.= 29° 37' 05.6211" (N)
Lon.= 95° 12' 40.5722" (W)
Reference Frame Used: NAD '83 (2011) (EPOCH: 2010)
Vertical Adjustment used: NAVD '88
General Location: ON NORTH WEST SIDE OF GULF PALMS ST AND SOUTH ST INTERSECTION ON TOP OF B-INLET
Date Set: 11-08-2025 Type of Mark: 1A

Keymap Page: 576Q & 576U
Orthometric Elevation = 35.78 FEET
Ellipsoid Height= -53.3927
Geoid: GEOID '18
Datum Source & Adjustment: GPS STATIC (OBSERVED ON 11-08-2025)

3 Nearest project control points (bearings and distances stated below):
1 S 14° 42' 37" E 79.85'
2 S 02° 11' 09" E 112.23'

NOTE:
1. Coordinates are shown in grid
2. Scale Factor = (S.F. 0.999870017)
3. Surface= Grid / S.F.

Surveyed By: Kuo & Associates, Inc.
10300 Westoffice Dr., Suite 800
Houston, TX 77042

City of Houston, Harris County, Texas

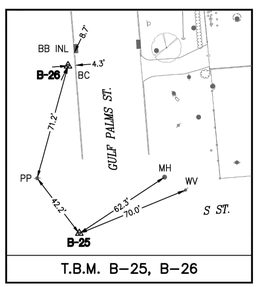

T.B.M. B-25, B-26

EXIST. TOPOGRAPHIC LEGEND

- ASPHALT SYMBOL
- B OR BB INLET
- BUSH
- C INLET
- CLEANOUT
- brick column
- DOWN GUY
- E INLET
- ELEC MANHOLE
- FIRE HYDRANT
- GAS METER
- GAS VALVE
- GATE
- GRATE INLET
- GRATE INLET
- MAIL BOX
- STORM MANHOLE
- SANITARY MANHOLE
- PLANTER
- POWER POLE
- POWER POLE W/LT.
- SIGN
- SIGNAL POLE
- SPRINKER VALVE
- SPRINKLER HEAD
- STREET LIGHT/FLOOD LIGHT
- STREET LIGHT/PARKING LIGHT
- TREE
- TREE STUMP
- TREE-CREPE MYRTLE
- TREE-PINE
- WATER METER
- WATER VALVE
- IRRIGATION CONTROL VALVE

ABBREVIATIONS

BC – BACK OF CURB
EA – EDGE OF ASPHALT
EC – EDGE OF CONCRETE
EG – EDGE OF GRAVEL
FH – FIRE HYDRANT
FC – FENCE CORNER
LT – LIGHT POLE
MB – MAIL BOX
MH – MANHOLE
PP – POWER POLE
PP/LIGHT – POWER POLE W/LIGHT
STLT – STREET LIGHT
TRLT – TRAFFIC LIGHT
WM – WATER METER

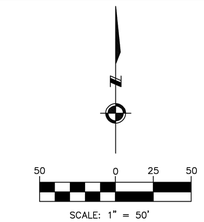

NO.	DATE	REVISION	APP.

BENCHMARK:

CITY OF HOUSTON MONUMENT _____-_____ IS AN ALUMINUM DISC ON TOP OF A CONCRETE INLET LOCATED ON THE NORTHWEST SIDE OF THE INTERSECTION OF GULF PALMS ST. AND SOUTH ST.

ELEV. 37.22 FEET NAVD 1988, 2001 ADJUSTMENT (PROJECT DATUM)
ELEV. 35.78 FEET NAVD 1988, (GEOID 18')

VERTICAL DATUM ADJUSTMENT:

THE ELEVATION DIFFERENCE IN BETWEEN THE FLOODPLAIN REFERENCE MARKS (RM 090100) PUBLISHED DATUM NAVD 1988, 2001 ADJUSTMENT AND DATUM NAVD 1988, (GEOID '18) IS 1.44'.

NAVD 1988, 2001 ADJ. ELEVATION
=NAVD 1988 (GEOID '18) ELEVATION – 1.44 FT

NOTE:

ALL BEARINGS AND DISTANCES ARE BASED ON TEXAS STATE PLANE COORDINATE SYSTEM, SOUTH CENTRAL ZONE NO. 4204, NAD83. ALL DISTANCES ARE IN SURFACE.

THE COORDINATES SHOWN HEREON ARE TEXAS SOUTH CENTRAL ZONE NO. 4204 STATE PLANE GRID COORDINATES (NAD83) AND MAY BE BROUGHT TO SURFACE BY DIVIDING BY THE COMBINED SCALE FACTOR 0.999870017.

LEGEND:

- **B-X** SURVEY CONTROL POINT NUMBER
- C–X DESIGN BASELINE POINT NUMBER
- SURVEY CONTROL POINT
- DESIGN BASELINE POINT
- CITY OF HOUSTON MONUMENT
- S. BL: SURVEY BASELINE — — —

IDS Engineering Group
13430 NW. Freeway
Suite 700
Houston, Tx. 77040
713.462.3178
TxEng Firm 2726
TxSurv Firm 10110700

KUO & ASSOCIATES
ENGINEERING + SURVEYING
10300 Westoffice Dr., Suite 800, Houston, Texas 77042
Tel: 713-975-8769, Fax: 713-975-0920, www.kuoassociates.com
TBPELS Firm Registration No. F-4578
TBPELS Firm Registration No. 1007560

THIS DOCUMENT IS RELEASED FOR THE PURPOSE OF INTERIM REVIEW UNDER THE AUTHORITY OF
KUTUBUL A. M. MAINUDDIN, R.P.L.S.
TEXAS REG. NO.: 6404
ON 12/08/2025
IT IS NOT TO BE USED FOR PERMIT, BIDDING OR CONSTRUCTION PURPOSES

CITY OF HOUSTON
HOUSTON PUBLIC WORKS

COH LS REHABILITATION AND RECONSTRUCTION
SOUTH POINT LS
SURVEY CONTROL MAP

WBS NUMBER	FOR CITY OF HOUSTON USE ONLY
R-000267-0178-3	
DRAWING SCALE	
1"=100'	
CITY OF HOUSTON PM	

DWG. NO.	
G-07	SHEET NO. 07 OF 321

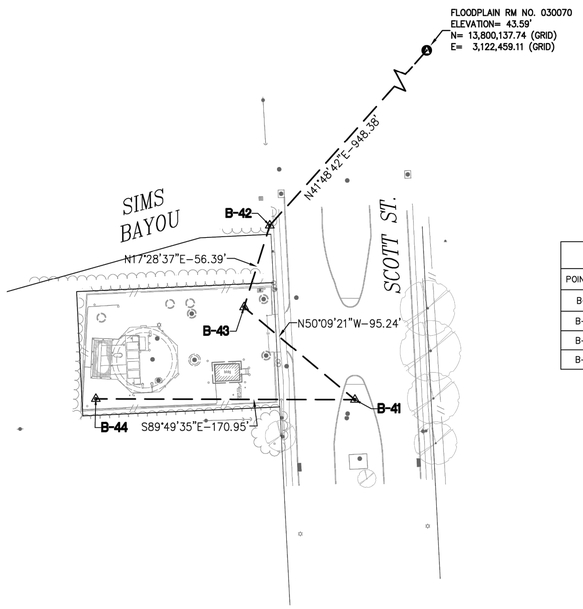

SURVEY BASELINE POINTS DATA (TEMPORARY BENCHMARK)						
POINT No.	NORTHING (SURFACE)	EASTING (SURFACE)	NORTHING (GRID)	EASTING (GRID)	ELEVATION	DESCRIPTION
B-41	13,801,110.08	3,122,288.95	13,799,316.17	3,121,883.11	39.76'	SET 5/8" I.R. W/CAP
B-42	13,801,224.89	3,122,232.76	13,799,430.97	3,121,826.93	40.04'	SET 'X' CUT ON CONC.
B-43	13,801,171.10	3,122,215.83	13,799,377.18	3,121,809.99	41.18'	SET 'X' CUT ON CONC.
B-44	13,801,110.60	3,122,118.00	13,799,316.69	3,121,712.18	41.60'	SET 'X' CUT ON CONC.

CITY OF HOUSTON

CITY SURVEY _____
SITE CONTROL MONUMENT

N.T.S.

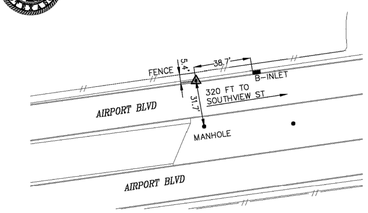

Project WBS# R-000267-0179-3
Texas Coordinate System of 1983,
South Central Zone, U. S. Survey Feet
X= 3,122,459.1367
Y= 13,800,137.7745
Lat.= 29° 38' 43.4519" (N)
Lon.= 95° 21' 59.2347" (W)
Reference Frame Used: NAD '83 (2011) (EPOCH: 2010)
Vertical Adjustment used: NAVD '88
General Location: NORTHSIDE OF AIRPORT BLVD ON THE BRIDGE APPROX 320 FT WEST FROM THE INTERSECTION OF SOUTHVIEW ST.
Date Set: 10-28-2025 Type of Mark: BRASS DISC (HC FLOODPLAIN RM 030070)

Keymap Page: 573G
Orthometric Elevation =43.70 FEET
Ellipsoid Height= -45.6571
Geoid: GEOID '18
Datum Source & Adjustment: GPS STATIC (OBSERVED ON 10-28-2025)

3 Nearest project control points (bearings and distances stated below):
1 S 41° 48' 38" W 948.43'
2 S 35° 02' 04" W 1003.55'
2 S 34° 16' 25" W 1110.16'

NOTE:
1. Coordinates are shown in grid
2. Scale Factor = (S.F. 0.999870017)
3. Surface= Grid / S.F.

Surveyed By: Kuo & Associates, Inc.
10300 Westoffice Dr., Suite 800
Houston, TX 77042

City of Houston, Harris County, Texas

N

50 0 25 50

SCALE: 1" = 50'

NO.	DATE	REVISION	APP.

BENCHMARK:

CITY OF HOUSTON MONUMENT _____-_____ IS A BRASS DISC IN CONCRETE STAMPED 030070 LOCATED ON NORTHEAST CORNER ON AIRPORT BLVD BRIDGE APPROX. 0.1 MILE EAST FROM THE INTERSECTION OF SCOTT ST IN KEY MAP NO. 573G IN THE SIMS BAYOU WATERSHED

ELEV. 43.59 FEET NAVD 1988, 2001 AJUSTMENT (PROJECT DATUM)
ELEV. 43.70 FEET NAVD 1988, (GEOID 18')

VERTICAL DATUM AJUSTMENT:

THE ELEVATION DIFFERENCE IN BETWEEN THE FLOODPLAIN REFERENCE MARK'S (RM 030070) PUBLISHED DATUM NAVD 1988, 2001 ADJUSTMENT AND DATUM NAVD 1988, (GEOID '18) IS 0.11'.

NAVD 1988, 2001 ADJ. ELEVATION
=NAVD 1988 (GEOID '18) ELEVATION – 0.11 FT

NOTE:

ALL BEARINGS AND DISTANCES ARE BASED ON TEXAS STATE PLANE COORDINATE SYSTEM, SOUTH CENTRAL ZONE NO. 4204, NAD83. ALL DISTANCES ARE IN SURFACE.

THE COORDINATES SHOWN HEREON ARE TEXAS SOUTH CENTRAL ZONE NO. 4204 STATE PLANE GRID COORDINATES (NAD83) AND MAY BE BROUGHT TO SURFACE BY DIVIDING BY THE COMBINED SCALE FACTOR 0.999870017.

LEGEND:

B-X	SURVEY CONTROL POINT NUMBER
C-X	DESIGN BASELINE POINT NUMBER
⚠	SURVEY CONTROL POINT
•	DESIGN BASELINE POINT
Ⓐ	CITY OF HOUSTON MONUMENT
S. BL:	SURVEY BASELINE — — —

N

EXIST. TOPOGRAPHIC LEGEND

ASPHALT SYMBOL	PLANTER
B OR BB INLET	POWER POLE
BUSH	POWER POLE W/LT.
C INLET	SIGN
CLEANOUT	SIGNAL POLE
brick column	SPRINKLER VALVE
DOWN GUY	SPRINKLER HEAD
E INLET	STREET LIGHT/FLOOD LIGHT
ELEC MANHOLE	STREET LIGHT/PARKING LIGHT
FIRE HYDRANT	TREE
GAS METER	TREE STUMP
GAS VALVE	TREE-CREPE MYRTLE
GATE	TREE-PINE
GRATE INLET	WATER METER
GRATE INLET	WATER VALVE
MAIL BOX	IRRIGATION CONTROL VALVE
STORM MANHOLE	
SANITARY MANHOLE	

ABBREVIATIONS

BC – BACK OF CURB
EA – EDGE OF ASPHALT
EC – EDGE OF CONCRETE
EG – EDGE OF GRAVEL
FH – FIRE HYDRANT
FC – FENCE CORNER
LT – LIGHT POLE
MB – MAIL BOX
MH – MANHOLE
PP – POWER POLE
PP/LIGHT – POWER POLE W/LIGHT
STLT – STREET LIGHT
TRLT – TRAFFIC LIGHT
WM – WATER METER

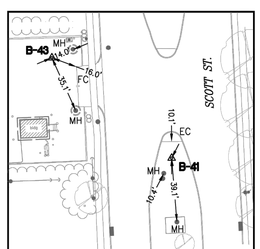

T.B.M. B-41, B-43

N.T.S.

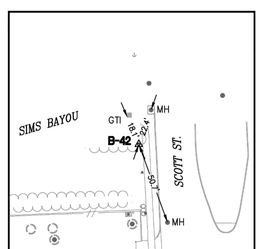

T.B.M. B-42

N.T.S.

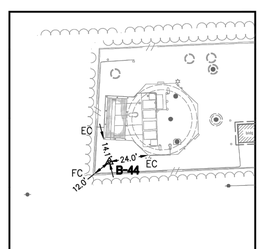

T.B.M. B-44

N.T.S.

IDS Engineering Group
13430 NW. Freeway
Suite 700
Houston, Tx. 77040
713.462.3178
TxEng Firm 2726
TxSurv Firm 10110700

KUO & ASSOCIATES
ENGINEERING + SURVEYING
10300 Westoffice Dr., Suite 800, Houston, Texas 77042
Tel: 713-975-8769, Fax: 713-975-0920, www.kuoassociates.com
TBPELS Firm Registration No. F-4578
TBPELS Firm Registration No. 1007560

THIS DOCUMENT IS RELEASED FOR THE PURPOSE OF INTERIM REVIEW UNDER THE AUTHORITY OF
KUTUBUL A. M. MAINUDDIN, R.P.L.S.
TEXAS REG. NO.: 6404
ON 12/08/2025
IT IS NOT TO BE USED FOR PERMIT, BIDDING OR CONSTRUCTION PURPOSES

CITY OF HOUSTON
HOUSTON PUBLIC WORKS

COH LS REHABILITATION AND RECONSTRUCTION
SCOTT STREET LS
SURVEY CONTROL MAP

WBS NUMBER	FOR CITY OF HOUSTON USE ONLY
R-000267-0178-3	
DRAWING SCALE	
1"=100'	
CITY OF HOUSTON PM	

DWG. NO.	
G-08	SHEET NO. 08 OF 321

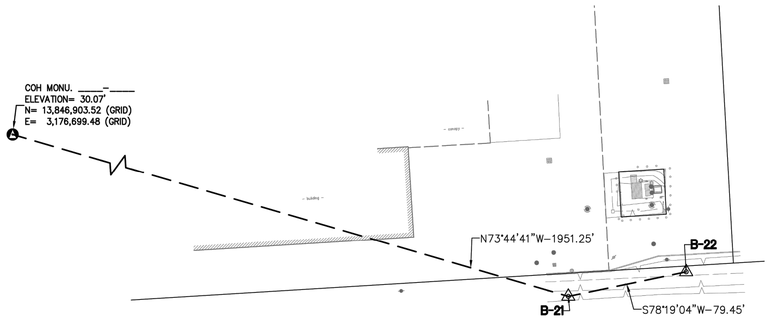

SURVEY BASELINE POINTS DATA (TEMPORARY BENCHMARK)						
POINT No.	NORTHING (SURFACE)	EASTING (SURFACE)	NORTHING (GRID)	EASTING (GRID)	ELEVATION	DESCRIPTION
B-21	13,848,157.42	3,178,985.69	13,846,357.40	3,178,572.48	15.86'	SET 1/2" I.R. W/CAP
B-22	13,848,173.51	3,179,063.50	13,846,373.48	3,178,650.27	15.94'	FND 5/8" I.R. W/CAP

CITY OF HOUSTON

CITY SURVEY _____
SITE CONTROL MONUMENT

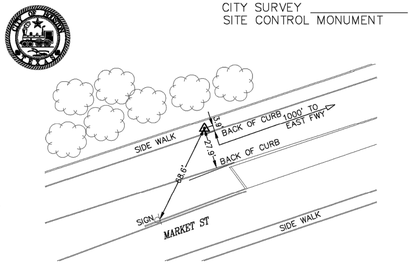

Project WBS# R-000267-0179-3
Texas Coordinate System of 1983,
South Central Zone, U. S. Survey Feet
X= 3,176,699.5317
Y= 13,846,903.4092
Lat.= 29° 46' 09.1216" (N)
Lon.= 95° 11' 27.5549" (W)
Reference Frame Used: NAD '83 (2011) (EPOCH: 2010)
Vertical Adjustment used: NAVD '88
General Location: ON NORTH SIDE OF MARKET ST AND APPROX.1000 FT EAST FWY INTERSECTION
Date Set: 05-14-2003 Type of Mark: BRASS DISC (HC FLOODPLAIN RM 150010)
Keymap Page: 497J
Orthometric Elevation =30.17 FEET
Ellipsoid Height= -59.3278
Geoid: GEOID '18
Datum Source & Adjustment: GPS STATIC (OBSERVED ON 10-30-2025)
3 Nearest project control points (bearings and distances stated below):
1 S 73° 44' 50" E 1951.17'
2 S 74° 48' 08" E 2021.70'

NOTE:
1. Coordinates are shown in grid
2. Scale Factor = (S.F. 0.999870017)
3. Surface= Grid / S.F.

Surveyed By: Kuo & Associates, Inc.
10300 Westoffice Dr., Suite 800
Houston, TX 77042

City of Houston, Harris County, Texas



NO.	DATE	REVISION	APP.

BENCHMARK:

CITY OF HOUSTON MONUMENT _____-_____ IS A BRASS DISC IN CONCRETE STAMPED 150010, LOCATED ON THE NORTHWEST CORNER OF MARKET ST BRIDGE APPROXIMATELY 0.20 MILE SOUTHWEST FROM THE INTERSECTION OF IH 10 IN KEYMAP 497J IN THE GREENS BAYOU WATERSHED

ELEV. 30.07 FEET NAVD 1988, 2001 ADJUSTMENT (PROJECT DATUM)
ELEV. 30.17 FEET NAVD 1988, (GEOID 18')

VERTICAL DATUM ADJUSTMENT:

THE ELEVATION DIFFERENCE IN BETWEEN THE FLOODPLAIN REFERENCE MARK'S (RM 150010) PUBLISHED DATUM NAVD 1988, 2001 ADJUSTMENT AND DATUM NAVD 1988, (GEOID '18) IS 0.10'.

NAVD 1988, 2001 ADJ. ELEVATION
=NAVD 1988 (GEOID '18) ELEVATION – 0.10 FT

NOTE:

ALL BEARINGS AND DISTANCES ARE BASED ON TEXAS STATE PLANE COORDINATE SYSTEM, SOUTH CENTRAL ZONE NO. 4204, NAD83. ALL DISTANCES ARE IN SURFACE.

THE COORDINATES SHOWN HEREON ARE TEXAS SOUTH CENTRAL ZONE NO. 4204 STATE PLANE GRID COORDINATES (NAD83) AND MAY BE BROUGHT TO SURFACE BY DIVIDING BY THE COMBINED SCALE FACTOR 0.999870017.

LEGEND:

B-X	SURVEY CONTROL POINT NUMBER
C-X	DESIGN BASELINE POINT NUMBER
⚠	SURVEY CONTROL POINT
•	DESIGN BASELINE POINT
Ⓐ	CITY OF HOUSTON MONUMENT
S. BL:	SURVEY BASELINE — — —



EXIST. TOPOGRAPHIC LEGEND

ASPHALT SYMBOL	PLANTER
B OR BB INLET	POWER POLE
BUSH	POWER POLE W/LT.
C INLET	SIGN
CLEANOUT	SIGNAL POLE
brick column	SPRINKER VALVE
DOWN GUY	SPRINKLER HEAD
E INLET	STREET LIGHT/FLOOD LIGHT
ELEC MANHOLE	STREET LIGHT/PARKING LIGHT
FIRE HYDRANT	TREE
GAS METER	TREE STUMP
GAS VALVE	TREE-CREPE MYRTLE
GATE	TREE-PINE
GRATE INLET	WATER METER
GRATE INLET	WATER VALVE
MAIL BOX	IRRIGATION CONTROL VALVE
STORM MANHOLE	
SANITARY MANHOLE	

ABBREVIATIONS

BC – BACK OF CURB
EA – EDGE OF ASPHALT
EC – EDGE OF CONCRETE
EG – EDGE OF GRAVEL
FH – FIRE HYDRANT
FC – FENCE CORNER
LT – LIGHT POLE
MB – MAIL BOX
MH – MANHOLE
PP – POWER POLE
PP/LIGHT – POWER POLE W/LIGHT
STLT – STREET LIGHT
TRLT – TRAFFIC LIGHT
WM – WATER METER

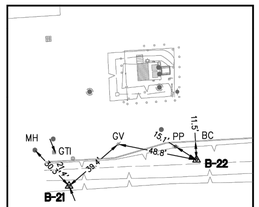

T.B.M. B-21, B-22

N.T.S.

IDS Engineering Group
13430 NW. Freeway
Suite 700
Houston, Tx. 77040
713.462.3178
TxEng Firm 2726
TxSurv Firm 10110700

KUO & ASSOCIATES
ENGINEERING + SURVEYING
10300 Westoffice Dr., Suite 800, Houston, Texas 77042
Tel: 713-975-8769, Fax: 713-975-0920, www.kuoassociates.com
TBPELS Firm Registration No. F-4578
TBPELS Firm Registration No. 1007560

THIS DOCUMENT IS RELEASED FOR THE PURPOSE OF INTERIM REVIEW UNDER THE AUTHORITY OF
KUTUBUL A. M. MAINUDDIN, R.P.L.S.
TEXAS REG. NO.: 6404
ON 12/08/2025
IT IS NOT TO BE USED FOR PERMIT, BIDDING OR CONSTRUCTION PURPOSES

CITY OF HOUSTON
HOUSTON PUBLIC WORKS

COH LS REHABILITATION AND RECONSTRUCTION
MARKET STREET LS
SURVEY CONTROL MAP

WBS NUMBER	FOR CITY OF HOUSTON USE ONLY
R-000267-0178-3	
DRAWING SCALE	
1"=100'	
CITY OF HOUSTON PM	

DWG. NO.	
G-09	SHEET NO. 09 OF 321

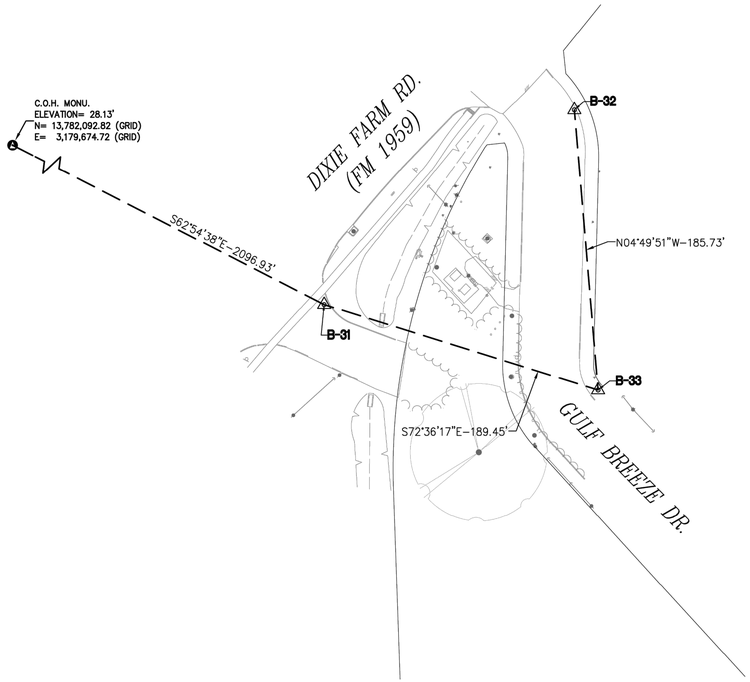

SURVEY BASELINE POINTS DATA (TEMPORARY BENCHMARK)						
POINT No.	NORTHING (SURFACE)	EASTING (SURFACE)	NORTHING (GRID)	EASTING (GRID)	ELEVATION	DESCRIPTION
B-31	13,782,929.58	3,181,954.97	13,781,138.03	3,181,541.37	33.41'	SET 'X' CUT ON CONC.
B-32	13,783,058.01	3,182,120.12	13,781,266.45	3,181,706.50	33.81'	SET 'X' CUT ON CONC.
B-33	13,782,872.94	3,182,135.76	13,781,081.40	3,181,722.14	32.67'	SET 1/2" I.R. W/CAP

CITY OF HOUSTON

CITY SURVEY 5850
SITE CONTROL MONUMENT 7913

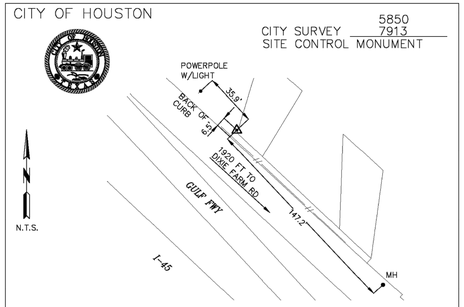

Project WBS# R-000267-0179-3
Texas Coordinate System of 1983, South Central Zone, U. S. Survey Feet
X= 3,179,674.7231
Y= 13,782,092.8156
Lat.= 29° 35' 26.8625" (N)
Lon.= 95° 11' 17.7774" (W)
Reference Frame Used: NAD '83 (2011) (EPOCH: 2010)
Vertical Adjustment used: NAVD '88
General Location: APPROXIMATELY 1920' NORTHWEST FROM THE INTERSECTION OF GULF FREEWAY AND DIXIE FARM RD.
Date Set: 10-29-2008 Type of Mark: 4A

Keymap Page: 617A
Orthometric Elevation =28.13 FEET
Ellipsoid Height= -60.9487
Geoid: GEOID '18
Datum Source & Adjustment: GPS STATIC (OBSERVED ON 10-28-2025)

3 Nearest project control points (bearings and distances stated below):
1 S 62° 54' 38" E 2096.93'
2 S 67° 52' 02" E 2193.68'
2 S 63° 42' 39" E 2283.90'

NOTE:
1. Coordinates are shown in grid
2. Scale Factor = (S.F. 0.999870017)
3. Surface= Grid / S.F.

Surveyed By: Kuo & Associates, Inc.
10300 Westoffice Dr., Suite 800
Houston, TX 77042

Date Revised:10-28-2025
City of Houston, Harris County, Texas

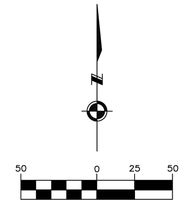

NO.	DATE	REVISION	APP.

BENCHMARK:

CITY OF HOUSTON MONUMENT ____-____ IS AN ALUMINUM DISC SET IN CONCRETE APPROXIMATELY 1920' NORTHWEST FROM THE INTERSECTION OF GULF FREEWAY AND DIXIE FARM RD.

ELEV. 29.92 FEET NAVD 1988, 2001 AJUSTMENT (PROJECT DATUM)
ELEV. 28.13 FEET NAVD 1988, (GEOID 18')

VERTICAL DATUM ADJUSTMENT:

THE ELEVATION DIFFERENCE IN BETWEEN THE FLOODPLAIN REFERENCE MARK'S (RM 010433) PUBLISHED DATUM NAVD 1988, 2001 ADJUSTMENT AND DATUM NAVD 1988, (GEOID '18) IS 0.10'.

NAVD 1988, 2001 ADJ. ELEVATION
=NAVD 1988 (GEOID '18) ELEVATION + 1.79 FT

NOTE:

ALL BEARINGS AND DISTANCES ARE BASED ON TEXAS STATE PLANE COORDINATE SYSTEM, SOUTH CENTRAL ZONE NO. 4204, NAD83. ALL DISTANCES ARE IN SURFACE.

THE COORDINATES SHOWN HEREON ARE TEXAS SOUTH CENTRAL ZONE NO. 4204 STATE PLANE GRID COORDINATES (NAD83) AND MAY BE BROUGHT TO SURFACE BY DIVIDING BY THE COMBINED SCALE FACTOR 0.999870017.

LEGEND:

B-X	SURVEY CONTROL POINT NUMBER
C-X	DESIGN BASELINE POINT NUMBER
⚠	SURVEY CONTROL POINT
•	DESIGN BASELINE POINT
⚠	CITY OF HOUSTON MONUMENT
S. BL:	SURVEY BASELINE — — —

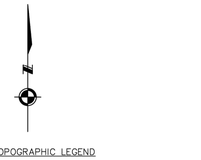

EXIST. TOPOGRAPHIC LEGEND

ASPHALT SYMBOL	PLANTER
B OR BB INLET	POWER POLE
BUSH	POWER POLE W/LT.
C INLET	SIGN
CLEANOUT	SIGNAL POLE
brick column	SPRINKER VALVE
DOWN GUY	SPRINKLER HEAD
E INLET	STREET LIGHT/FLOOD LIGHT
ELEC MANHOLE	STREET LIGHT/PARKING LIGHT
FIRE HYDRANT	TREE
GAS METER	TREE STUMP
GAS VALVE	TREE-CREPE MYRTLE
GATE	TREE-PINE
GRATE INLET	WATER METER
GRATE INLET	WATER VALVE
MAIL BOX	IRRIGATION CONTROL VALVE
STORM MANHOLE	
SANITARY MANHOLE	

ABBREVIATIONS

BC – BACK OF CURB
EA – EDGE OF ASPHALT
EC – EDGE OF CONCRETE
EG – EDGE OF GRAVEL
FH – FIRE HYDRANT
FC – FENCE CORNER
LT – LIGHT POLE
MB – MAIL BOX
MH – MANHOLE
PP – POWER POLE
PP/LIGHT – POWER POLE W/LIGHT
STLT – STREET LIGHT
TRLT – TRAFFIC LIGHT
WM – WATER METER

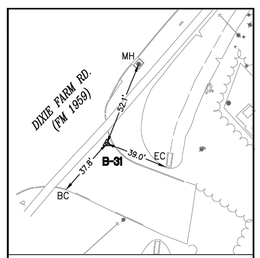

T.B.M. B-31

N.T.S.

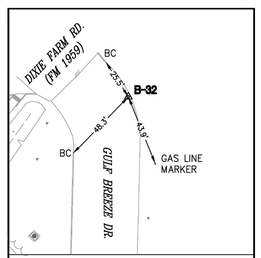

T.B.M. B-32

N.T.S.

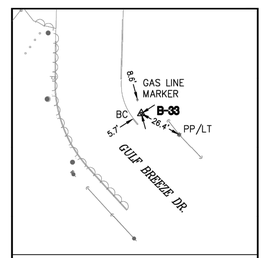

T.B.M. B-33

N.T.S.

IDS Engineering Group
13430 NW. Freeway
Suite 700
Houston, Tx. 77040
713.462.3178
TxEng Firm 2726
TxSurv Firm 10110700

KUO & ASSOCIATES
ENGINEERING + SURVEYING
10300 Westoffice Dr., Suite 800, Houston, Texas 77042
Tel: 713-975-8769, Fax: 713-975-0920, www.kuoassociates.com
TBPELS Firm Registration No. F-4578
TBPELS Firm Registration No. 1007560

THIS DOCUMENT IS RELEASED FOR THE PURPOSE OF INTERIM REVIEW UNDER THE AUTHORITY OF
KUTUBUL A. M. MAINUDDIN, R.P.L.S.
TEXAS REG. NO.: 6404
ON 12/08/2025
IT IS NOT TO BE USED FOR PERMIT, BIDDING OR CONSTRUCTION PURPOSES

CITY OF HOUSTON
HOUSTON PUBLIC WORKS

COH LS REHABILITATION AND RECONSTRUCTION
MUD 067 LS
SURVEY CONTROL MAP

WBS NUMBER	FOR CITY OF HOUSTON USE ONLY
R-000267-0178-3	
DRAWING SCALE	
1"=100'	
CITY OF HOUSTON PM	

DWG. NO.	
G-10	SHEET NO. OF 321

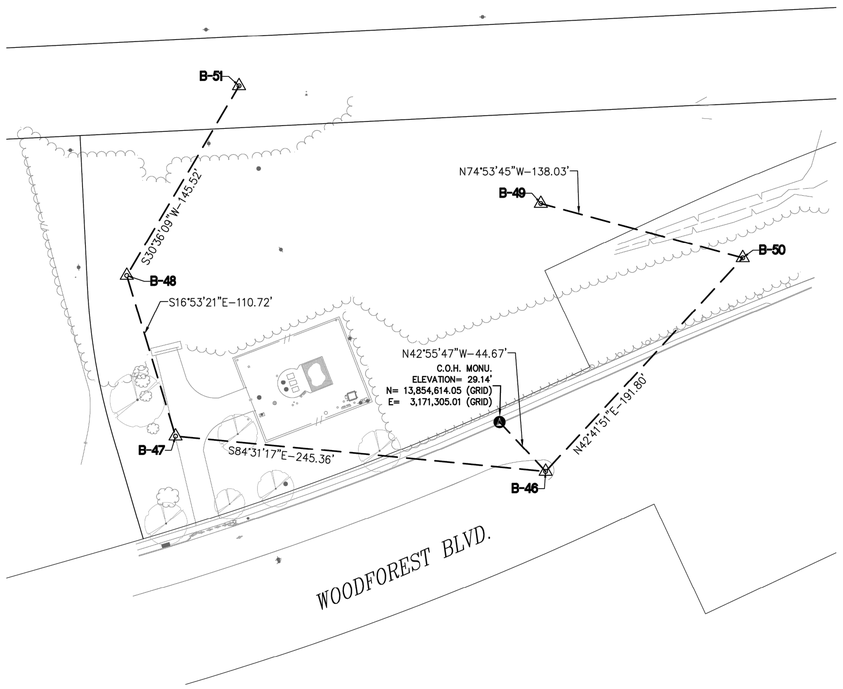

SURVEY BASELINE POINTS DATA (TEMPORARY BENCHMARK)						
POINT No.	NORTHING (SURFACE)	EASTING (SURFACE)	NORTHING (GRID)	EASTING (GRID)	ELEVATION	DESCRIPTION
B-46	13,856,382.44	3,171,747.70	13,854,581.35	3,171,335.43	30.04'	SET 'X' CUT ON CONC.
B-47	13,856,405.87	3,171,503.47	13,854,604.77	3,171,091.22	27.64'	SET 'X' CUT ON CONC.
B-48	13,856,511.81	3,171,471.30	13,854,710.70	3,171,059.06	28.12'	SET 1/2" I.R. W/CAP
B-49	13,856,559.38	3,171,744.51	13,854,758.26	3,171,332.24	28.75'	SET 1/2" I.R. W/CAP
B-50	13,856,523.41	3,171,877.77	13,854,722.30	3,171,465.48	25.85'	SET 1/2" I.R. W/CAP
B-51	13,856,637.06	3,171,545.38	13,854,835.93	3,171,133.13	29.49'	SET 'X' MARK

CITY OF HOUSTON

CITY SURVEY
SITE CONTROL MONUMENT

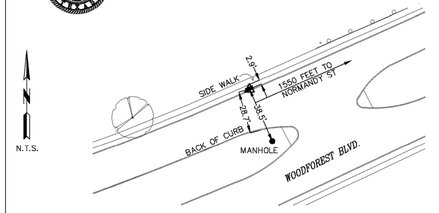

Project WBS# R-000267-0179-3
Texas Coordinate System of 1983,
South Central Zone, U. S. Survey Feet
X= 3,171,305.0073
Y= 13,854,614.0537
Lat.= 29° 47' 27.1518" (N)
Lon.= 95° 12' 25.8999" (W)
Reference Frame Used: NAD '83 (2011) (EPOCH: 2010)
Vertical Adjustment used: NAVD '88
General Location: ON NORTH EAST SIDE OF WOODFOREST BLVD AND APPROX. 1550 FEET NORMANDY ST INTERSECTION ON TOP OF B INLET
Date Set: 11-12-2025 Type of Mark: 1A
3 Nearest project control points (bearings and distances stated below):
1 S 45° 37' 32" E 38.66'
2 S 54° 48' 57" W 495.26'
2 S 34° 16' 25" W 539.03'
NOTE:
1. Coordinates are shown in grid
2. Scale Factor = (S.F. 0.999870017)
3. Surface= Grid / S.F.
Surveyed By: Kuo & Associates, Inc.
10300 Westoffice Dr., Suite 800
Houston, TX 77042

Keymap Page: 494Q
Orthometric Elevation =29.14 FEET
Ellipsoid Height= -60.4122
Geoid: GEOID '18
Datum Source & Adjustment: GPS STATIC (OBSERVED ON 11-12-2025)

City of Houston, Harris County, Texas

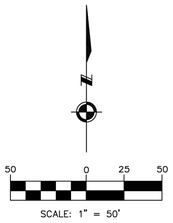

NO.	DATE	REVISION	APP.

BENCHMARK:

CITY OF HOUSTON MONUMENT _____-_____ IS AN ALUMINUM DISK ON TOP OF INLET LOCATED ALONG WOODFOREST BLVD APPROXIMATELY 450 FEET WEST FROM THE GREENS BAYOU BRIDGE

ELEV. 32.40 FEET NAVD 1988, 2001 AJUSTMENT(PROJECT DATUM)
ELEV. 29.14 FEET NAVD 1988, (GEOID '18)*

* OBSERVED BY GPS SURVEYING AND PROCESSED IN REFERENCE TO THE CORS DATED NOVEMBER 12, 2025.

VERTICAL DATUM ADJUSTMENT:

THE ELEVATION DIFFERENCE IN BETWEEN THE FLOODPLAIN REFERENCE MARK'S (RM 150200) PUBLISHED DATUM NAVD 1988, 2001 ADJUSTMENT AND DATUM NAVD 1988, (GEOID '18) IS 3.18'.

NAVD 1988, 2001 ADJ. ELEVATION
= NAVD 1988 (GEOID '18) ELEVATION + 3.18 FT

NOTE:

ALL BEARINGS AND DISTANCES ARE BASED ON TEXAS STATE PLANE COORDINATE SYSTEM, SOUTH CENTRAL ZONE NO. 4204, NAD83. ALL DISTANCES ARE IN SURFACE.

THE COORDINATES SHOWN HEREON ARE TEXAS SOUTH CENTRAL ZONE NO. 4204 STATE PLANE GRID COORDINATES (NAD83) AND MAY BE BROUGHT TO SURFACE BY DIVIDING BY THE COMBINED SCALE FACTOR 0.999870017.

LEGEND:

B-X	SURVEY CONTROL POINT NUMBER
C-X	DESIGN BASELINE POINT NUMBER
⚠	SURVEY CONTROL POINT
●	DESIGN BASELINE POINT
✪	FLOODPLAIN REFERENCE MARK
S. BL:	SURVEY BASELINE



EXIST. TOPOGRAPHIC LEGEND

ASPHALT SYMBOL	PLANTER
B OR BB INLET	POWER POLE
BUSH	POWER POLE W/LT.
C INLET	SIGN
CLEANOUT	SIGNAL POLE
brick column	SPRINKER VALVE
DOWN GUY	SPRINKLER HEAD
E INLET	STREET LIGHT/FLOOD LIGHT
ELEC MANHOLE	STREET LIGHT/PARKING LIGHT
FIRE HYDRANT	TREE
GAS METER	TREE STUMP
GAS VALVE	TREE-CREPE MYRTLE
GATE	TREE-PINE
GRATE INLET	WATER METER
GRATE INLET	WATER VALVE
MAIL BOX	IRRIGATION CONTROL VALVE
STORM MANHOLE	
SANITARY MANHOLE	

ABBREVIATIONS

BC – BACK OF CURB
EA – EDGE OF ASPHALT
EC – EDGE OF CONCRETE
EG – EDGE OF GRAVEL
FH – FIRE HYDRANT
FC – FENCE CORNER
LT – LIGHT POLE
MB – MAIL BOX
MH – MANHOLE
PP – POWER POLE
PP/LIGHT – POWER POLE W/LIGHT
STLT – STREET LIGHT
TRLT – TRAFFIC LIGHT
WM – WATER METER

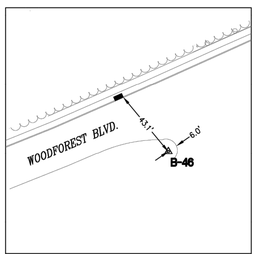

T.B.M. B-46
N.T.S.

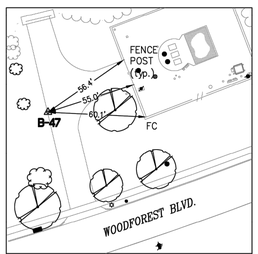

T.B.M. B-47
N.T.S.

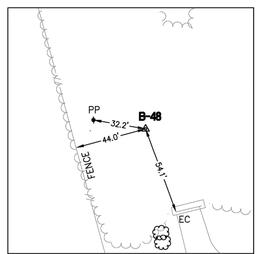

T.B.M. B-46
N.T.S.

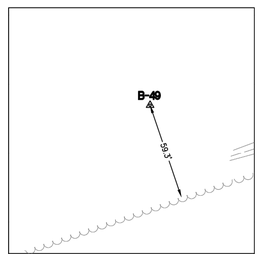

T.B.M. B-49
N.T.S.

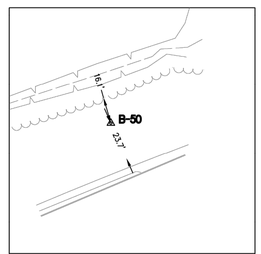

T.B.M. B-50
N.T.S.

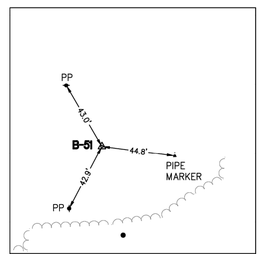

T.B.M. B-51
N.T.S.

IDS Engineering Group
13430 NW. Freeway
Suite 700
Houston, Tx. 77040
713.462.3178
TxEng Firm 2726
TxSurv Firm 10110700

KUO & ASSOCIATES
ENGINEERING + SURVEYING
10300 Westoffice Dr., Suite 800, Houston, Texas 77042
Tel: 713-975-8769, Fax: 713-975-0920, www.kuoassociates.com
TBPELS Firm Registration No. F-4578
TBPELS Firm Registration No. 1007560

THIS DOCUMENT IS RELEASED FOR THE PURPOSE OF INTERIM REVIEW UNDER THE AUTHORITY OF
KUTUBUL A. M. MAINUDDIN, R.P.L.S.
TEXAS REG. NO.: 6404
ON 12/08/2025
IT IS NOT TO BE USED FOR PERMIT, BIDDING OR CONSTRUCTION PURPOSES

CITY OF HOUSTON
HOUSTON PUBLIC WORKS

COH LS REHABILITATION AND RECONSTRUCTION
WOODFOREST BOULEVARD LS
SURVEY CONTROL MAP

WBS NUMBER	FOR CITY OF HOUSTON USE ONLY
R-000267-0178-3	
DRAWING SCALE	
1"=100'	
CITY OF HOUSTON PM	

DWG. NO.	
G-11	SHEET NO. 11 OF 321

PLOTTED: 12/17/2025 7:53 AM



SOUTH POINT LIFT STATION
10385 GULF PALMS STREET
KEY MAP No. 576Q
COUNCIL DISTRICT: E

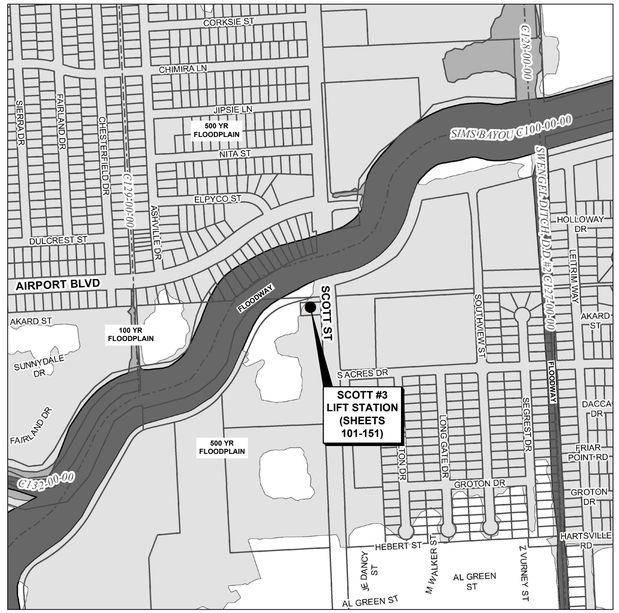

SCOTT #3 LIFT STATION
10718 1/2 SCOTT STREET
KEY MAP No. 573G
COUNCIL DISTRICT: D

LEGEND:

- 500 YR FLOODPLAIN
- 100 YR FLOODPLAIN
- FLOODWAY

N
W E
S

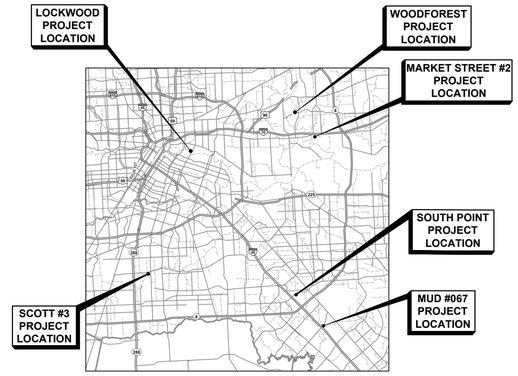

PROJECT LOCATION MAP

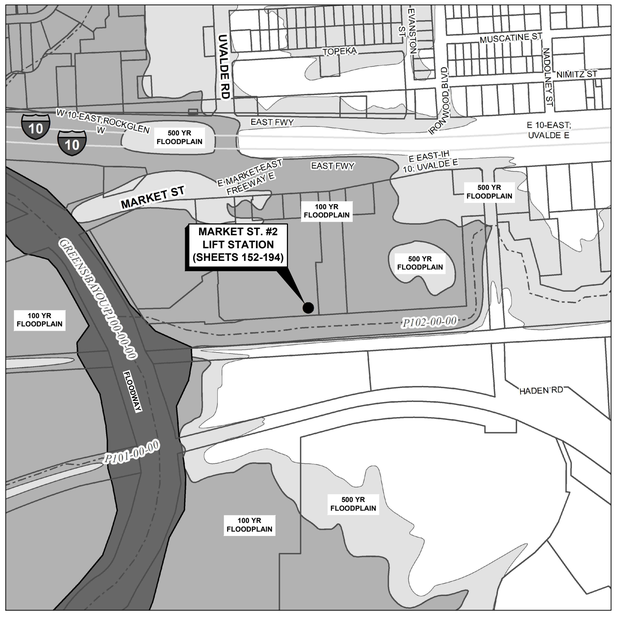

MARKET STREET #2 LIFT STATION
13400 MARKET STREET
KEY MAP No. 497K
COUNCIL DISTRICT: E

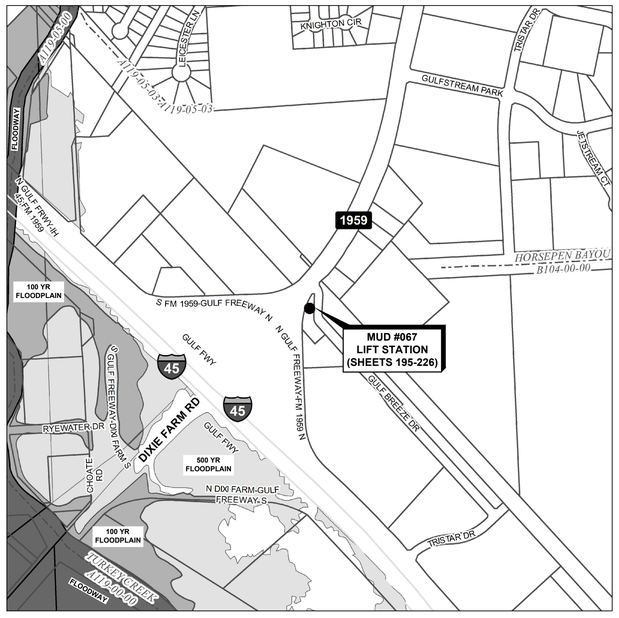

MUD #067
15503 GULF FREEWAY
KEY MAP No. 617B
COUNCIL DISTRICT: D

NO.	DATE	REVISION	APP.

IDS Engineering Group
13430 NW. Freeway, Suite 700
Houston, Tx. 77040
713.462.3178
TxEng Firm 2726 | TxSurv Firm 10110700

SURVEYED BY: KUO & ASSOCIATES, INC.
TBPE FIRM #F-4578; TBPLS FIRM #1007560

THIS DOCUMENT IS RELEASED FOR THE PURPOSE OF REVIEW UNDER THE AUTHORITY OF MARCEL KHOUW, P.E. 101807 ON 12/17/2025. IT IS NOT TO BE USED FOR CONSTRUCTION PURPOSES.

CITY OF HOUSTON
HOUSTON PUBLIC WORKS

LIFT STATION RENEWAL AND REPLACEMENT FY 2023

LIFT STATION VICINITY MAPS (SHEET 1 OF 2)

WBS NUMBER	FOR CITY OF HOUSTON USE ONLY
R-000267-0179-4	
DRAWING SCALE	
HORIZ: N.T.S. VERT: N/A	
CITY OF HOUSTON PM	
NAWARAJ PANTA, P.E.	
SHEET NO. 12 OF 321	

DWG. NO. G-12

FILE PATH: \\idseg.com\FS\Projects\0000\005708500 CoH Lift Stations - FY 2023\CAD\DWG\PRODUCTION\12-VICINITY MAPS.dwg

PLOTTED: 12/17/2025 7:54 AM

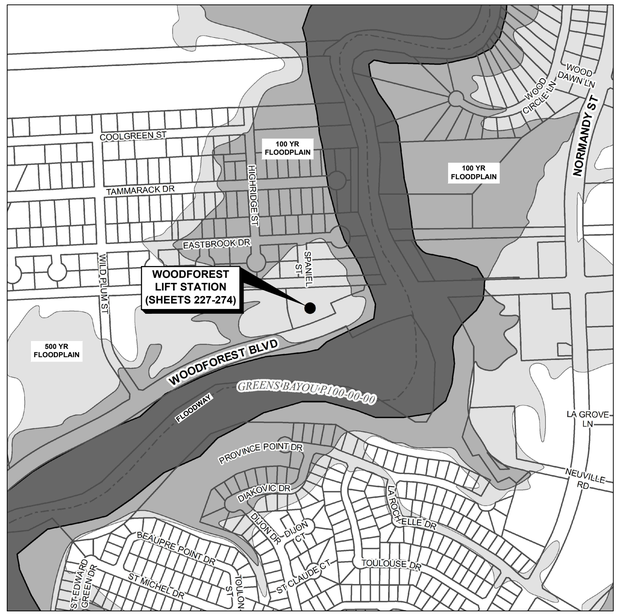

WOODFOREST LIFT STATION
12507 WOODFOREST BOULEVARD
KEY MAP NO. 496D
COUNCIL DISTRICT: I

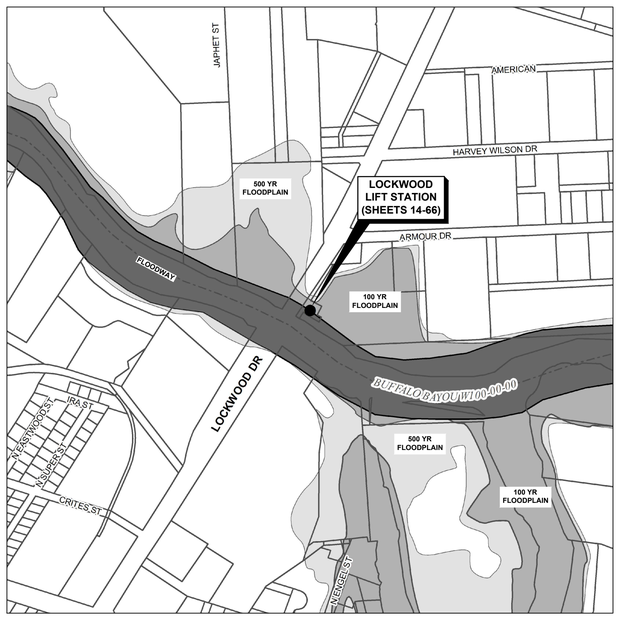

LOCKWOOD LIFT STATION
5400 ARMOUR DRIVE
KEY MAP No. 494Q
COUNCIL DISTRICT: H

LEGEND:

- 500 YR FLOODPLAIN
- 100 YR FLOODPLAIN
- FLOODWAY

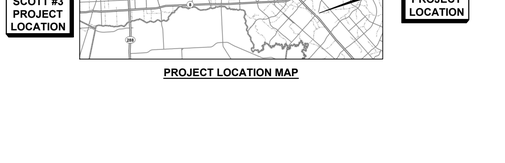

PROJECT LOCATION MAP

NO.	DATE	REVISION	APP.

IDS Engineering Group
13430 NW. Freeway, Suite 700
Houston, Tx. 77040
713.462.3178
TxEng Firm 2726 | TxSurv Firm 10110700

SURVEYED BY: KUO & ASSOCIATES, INC.
TBPE FIRM #F-4578; TBPLS FIRM #1007560

THIS DOCUMENT IS RELEASED FOR THE PURPOSE OF REVIEW UNDER THE AUTHORITY OF MARCEL KHOUW, P.E. 101807 ON 12/17/2025. IT IS NOT TO BE USED FOR CONSTRUCTION PURPOSES.

CITY OF HOUSTON
HOUSTON PUBLIC WORKS

LIFT STATION RENEWAL AND REPLACEMENT FY 2023

LIFT STATION VICINITY MAPS (SHEET 2 OF 2)

WBS NUMBER	FOR CITY OF HOUSTON USE ONLY
R-000267-0179-4	
DRAWING SCALE	
HORIZ: N.T.S VERT: N/A	
CITY OF HOUSTON PM	
NAWARAJ PANTA, P.E.	
SHEET NO. 13 OF 321	

DWG. NO. G-13

FILE PATH: \\idseg.com\FS\Projects\0000\005708500 CoH Lift Stations - FY 2023\CAD\DWG\PRODUCTION\13-VICINITY MAPS.dwg

PLOTTED: 12/17/2025 7:54 AM



60' 0' 60'
SCALE
1" = 60'

N E W S

BENCHMARK:

FLOODPLAIN REFERENCE MARK NUMBER 210025 IS A BRASS DISC IN CONCRETE STAMPED 210025, LOCATED AT THE NORTHWEST HEADWALL ON HIRSCH ROAD BRIDGE APPROXIMATELY 0.20 MILES SOUTH FROM THE INTERSECTION OF CLINTON DRIVE IN KEY MAP 494K IN THE BUFFALO BAYOU WATERSHED.

ELEV. 40.68 FEET NAVD 1988, 2001 ADJUSTMENT

FLOODPLAIN:

FLOODPLAIN REFERENCE MARK NUMBER 210025 IS A BRASS DISC IN CONCRETE LOCATED AT THE INTERSECTION OF CLINTON DR AND HIRSCH RD, TRAVEL SOUTH ON HIRSCH RD APPROXIMATELY .2 MILES TO THE BRIDGE

ELEV. 40.68 FEET NAVD 1988, 2001 ADJUSTMENT
100-YR ELEV. 20.00'
500-YR ELEV. 25.00'
FIRM PANEL: 48201C0690M

EXISTING UTILITY NOTE:

EXISTING UNDERGROUND UTILITY INFORMATION (TYPE, SIZE & OWNERSHIP) ARE SHOWN APPROXIMATELY BASED ON THE AVAILABLE RECORD DRAWINGS AND FIELD VERIFICATION (WHERE FEASIBLE) WITHOUT PROBING AND EXCAVATION. NO WARRANTY IS MADE AS TO THE ACCURACY OR COMPLETENESS OF UTILITY LOCATION SHOWN ON THE DRAWING. CAUTION SHOULD BE EXERCISED WHEN EXCAVATING OR BORE AND JACKING IN THE VICINITY OF UNDERGROUND UTILITIES. OWNERS OF THE UTILITIES SHOULD BE NOTIFIED PRIOR TO SUCH ACTIVITIES. CALL UTILITY COORDINATING COMMITTEE AT 713-223-4567, AT LEAST 48 HOURS PRIOR TO EXCAVATING IN THE STREET RIGHT-OF-WAY.

NOTES:

1. LOCKWOOD LIFT STATION SITE IS ACCESSIBLE THROUGH AN ACCESS EASEMENT LOCATED OFF OF LOCKWOOD DRIVE (H.C.C.F. 147455).
2. CONTRACTOR TO MAINTAIN ACCESS TO ALL INDUSTRIAL/ COMMERCIAL DRIVEWAYS ALONG ACCESS ROUTE AT ALL TIMES.

NO.	DATE	REVISION	APP.

IDS Engineering Group
13430 NW. Freeway, Suite 700
Houston, Tx. 77040
713.462.3178
TxEng Firm 2726 | TxSurv Firm 10110700

THIS DOCUMENT IS RELEASED FOR THE PURPOSE OF REVIEW UNDER THE AUTHORITY OF MARCEL KHOUW, P.E. 101807 ON 12/17/2025. IT IS NOT TO BE USED FOR CONSTRUCTION PURPOSES.

SURVEYED BY: KUO & ASSOCIATES, INC.
FB NO.

CITY OF HOUSTON
HOUSTON PUBLIC WORKS

LIFT STATION RENEWAL AND REPLACEMENT FY 2023

LOCKWOOD EXISTING SITE ACCESS AND CLEARING PLAN

WBS NUMBER	FOR CITY OF HOUSTON USE ONLY
R-000267-0179-4	
DRAWING SCALE	
HORIZ: VALUE VERT: N/A	
CITY OF HOUSTON PM	
NAWARAJ PANTA, P.E.	

DWG. NO.	SHEET NO. 14 OF 321
LCK-C-01	

IDS JOB No. 0057-085-00

FILE PATH: \\dseg.com\FS\Projects\0000\005708500 CoH Lift Stations - FY 2023\CAD\DWG\PRODUCTION\14-LOCKWOOD SITE ACCESS.dwg

PLOTTED: 12/17/2025 7:54 AM

LEGEND

- EXISTING CONCRETE PAVEMENT
- REMOVE EXISTING CONCRETE PAVEMENT
- SITE DEMOLITION
- EXISTING CONCRETE SIDEWALK
- REMOVE EXISTING CONCRETE SIDEWALK
- ABANDON ANY UNDERGROUND UTILITY
- REMOVE ANY UNDERGROUND UTILITY
- REMOVE EXISTING FENCE
- FILTER FABRIC FENCE

NOTES:

1. EXISTING LIFT STATION WET WELL TO REMAIN.
2. SEE ELECTRICAL PLANS ON SHEETS LCK-E-01 FOR ELECTRICAL DEMOLITION.
3. CONTRACTOR SHALL COORDINATE WITH CENTERPOINT ENERGY TO DE-ENERGIZE THE LIFT STATION AND OTHER ELECTRICAL EQUIPMENT ON SITE.
4. CONTRACTOR SHALL PROTECT THE EXISTING CONDUIT AND CABLE. IF CABLE OR CONDUIT IS DAMAGED CONTRACTOR SHALL REPLACE AT NO ADDITIONAL COST TO THE CITY.
5. REMOVE THE EXISTING FORCE MAIN TO THE NEAREST PIPE JOINT AND TIE PROP FORCE MAIN TO EXIST. USE RESTRAINED JOINTS.
6. THE EXISTING FORCE MAIN IS ASSUMED TO BE DUCTILE IRON BELL AND SPIGOT AND SHALL BE FIELD VERIFIED BY THE CONTRACTOR.
7. CONTRACTOR TO COORDINATE WITH BUFFALO BAYOU PARTNERSHIP FOR ACCESS TO SANITARY SEWER EASEMENT. CONTACT XXXX XXXX AT XXX-XXX-XXXX.

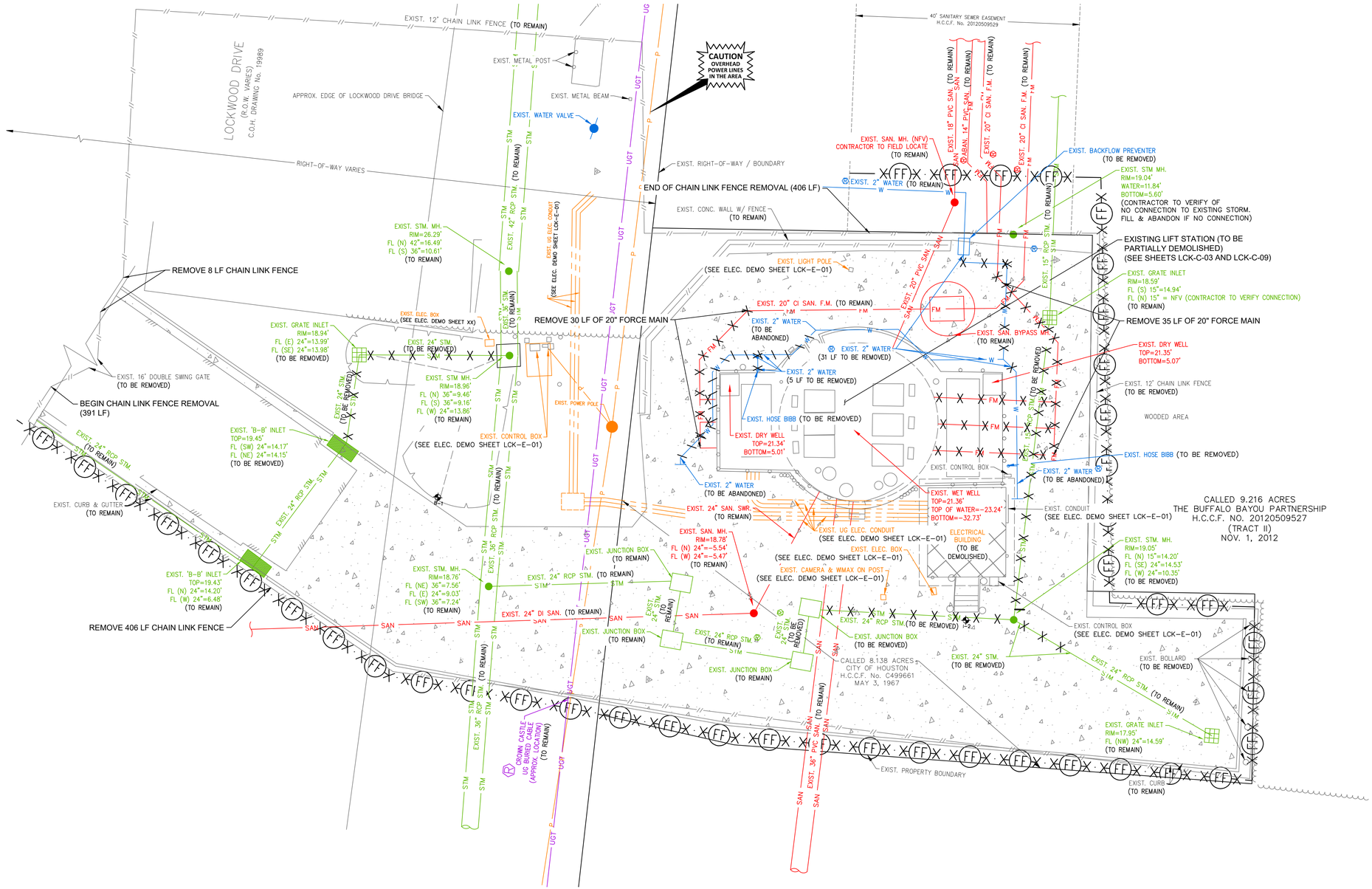

10' 0' 10'
SCALE
1"=10'

BENCHMARK:

FLOODPLAIN REFERENCE MARK NUMBER 210025 IS A BRASS DISC IN CONCRETE STAMPED 210025, LOCATED AT THE NORTHWEST HEADWALL ON HIRSCH ROAD BRIDGE APPROXIMATELY 0.20 MILES SOUTH FROM THE INTERSECTION OF CLINTON DRIVE IN KEY MAP 494K IN THE BUFFALO BAYOU WATERSHED.

ELEV. 40.68 FEET NAVD 1988, 2001 ADJUSTMENT

FLOODPLAIN:

FLOODPLAIN REFERENCE MARK NUMBER 210025 IS A BRASS DISC IN CONCRETE LOCATED AT THE INTERSECTION OF CLINTON DR AND HIRSCH RD, TRAVEL SOUTH ON HIRSCH RD APPROXIMATELY .2 MILES TO THE BRIDGE

ELEV. 40.68 FEET NAVD 1988, 2001 ADJUSTMENT
100-YR ELEV. 20.00'
500-YR ELEV. 25.00'
FIRM PANEL: 48201C0690M

EXISTING UTILITY NOTE:

EXISTING UNDERGROUND UTILITY INFORMATION (TYPE, SIZE & OWNERSHIP) ARE SHOWN APPROXIMATELY BASED ON THE AVAILABLE RECORD DRAWINGS AND FIELD VERIFICATION (WHERE FEASIBLE) WITHOUT PROBING AND EXCAVATION. NO WARRANTY IS MADE AS TO THE ACCURACY OR COMPLETENESS OF UTILITY LOCATION SHOWN ON THE DRAWING. CAUTION SHOULD BE EXERCISED WHEN EXCAVATING OR BORE AND JACKING IN THE VICINITY OF UNDERGROUND UTILITIES. OWNERS OF THE UTILITIES SHOULD BE NOTIFIED PRIOR TO SUCH ACTIVITIES. CALL UTILITY COORDINATING COMMITTEE AT 713-223-4567, AT LEAST 48 HOURS PRIOR TO EXCAVATING IN THE STREET RIGHT-OF-WAY.

NO.	DATE	REVISION	APP.

NOTICE:
FOR YOUR SAFETY, YOU ARE REQUIRED BY TEXAS LAW TO CALL 811 AT LEAST 48 HOURS BEFORE YOU DIG SO THAT UNDERGROUND LINES CAN BE MARKED. THIS SIGNATURE DOES NOT FULFILL YOUR OBLIGATION TO CALL 811

VERIFICATION OF PRIVATE UTILITY LINES

Date

CenterPoint Energy natural gas utilities shown. (Gas service lines are not shown). This signature not be used for conflict verification.

Signature valid for six months.

Date

CenterPoint Energy/UNDERGROUND Electrical Facilities Verification ONLY. (This signature verifies existing underground facilities – not to be used for conflict verification)

Signature valid for six months.

Date

Approved for AT&T underground conduit facilities only.
Signature valid for one year.

IDS Engineering Group
13430 NW. Freeway, Suite 700
Houston, Tx. 77040
713.462.3178
TxEng Firm 2726 | TxSurv Firm 10110700

SURVEYED BY: KUO & ASSOCIATES, INC.
TBPE FIRM #F-4578; TBPLS FIRM #1007560

THIS DOCUMENT IS RELEASED FOR THE PURPOSE OF REVIEW UNDER THE AUTHORITY OF MARCEL KHOUW, P.E. 101807 ON 12/17/2025. IT IS NOT TO BE USED FOR CONSTRUCTION PURPOSES.

CITY OF HOUSTON
HOUSTON PUBLIC WORKS

LIFT STATION RENEWAL AND REPLACEMENT FY 2023

LOCKWOOD LIFT STATION SITE DEMOLITION PLAN AND SWPPP

WBS NUMBER	FOR CITY OF HOUSTON USE ONLY
R-000267-0179-4	
DRAWING SCALE	
HORIZ: 1" = 10' VERT: N/A	
CITY OF HOUSTON PM	
NAWARAJ PANTA, P.E.	

DWG. NO.	SHEET NO.
LCK-C-02	15 OF 321

FILE PATH: \\tdeg.com\FS\Projects\0000\005708500 CoH Lift Stations - FY 2023\CAD\DWG\PRODUCTION\15-LOCKWOOD SITE PLAN AND DEMO.dwg

PLOTTED: 12/17/2025 7:54 AM

LIFT STATION DEMOLITION AND ABANDONMENT NOTES:

1. THIS DRAWING IS A REPRODUCTION OF THE EXISTING LIFT STATION CONSTRUCTION DRAWINGS AND INTENDED TO PROVIDE GENERAL INFORMATION FOR STATION DEMOLITION. THE CONTRACTOR IS RESPONSIBLE FOR DETERMINING THE ACTUAL WORK REQUIRED FOR DEMOLITION AND REMOVAL OF STRUCTURAL, MECHANICAL, AND ELECTRICAL COMPONENTS. A CLAIM FOR CHANGED CONDITIONS BETWEEN THE EXISTING CONDITIONS AND THE RECORD DRAWINGS WILL NOT BE CONSIDERED.
2. NO DEMOLITION IS TO BE PERFORMED UNTIL BYPASS PUMPING HAS BEEN INSTALLED AND OPERATIONAL.
3. THE CITY OF HOUSTON WILL RETAIN SALVAGE RIGHTS TO ALL MATERIAL AND EQUIPMENT. ALL MATERIALS AND EQUIPMENT RETAINED BY THE CITY OF HOUSTON SHALL BE DELIVERED TO A POINT DESIGNATED BY CITY OF HOUSTON REPRESENTATIVE (MR. ARTURO CARRILLO 832-395-3558). ANY MATERIAL OR EQUIPMENT NOT RETAINED BY THE CITY OF HOUSTON SHALL BE REMOVED FROM THE SITE AND DISPOSED OF BY THE CONTRACTOR IN ACCORDANCE WITH APPLICABLE REGULATIONS.
4. WHEN REMOVING EXISTING PUMPS, CONTRACTOR SHALL LEAVE AS MUCH WIRE/CABLE AS POSSIBLE IN ORDER FOR THE CITY TO REUSE THE PUMPS.
5. CONTRACTOR SHALL NOTIFY TEXAS DEPARTMENT OF HEALTH (DEPARTMENT) ON A FORM SPECIFIED BY THE DEPARTMENT OF ANY ASBESTOS ABATEMENT ACTIVITY, RENOVATION OR OPERATIONS AND MAINTENANCE ACTIVITY AFFECTING ASBESTOS-CONTAINING BUILDING MATERIALS, OR ANY DEMOLITION IN FACILITIES OR PUBLIC BUILDINGS.
6. CONCRETE SLAB AND WALLS INDICATED ON THIS PLAN SHALL BE REMOVED TO 5 FEET BELOW FINISHED GRADE AS PER SPECIFICATION SECTION 02220.
7. ALL REMAINING WALL OPENINGS IN THE VALVE VAULT SHALL BE SEALED WITH NON-SHRINK GROUT.
8. CONTRACTOR SHALL BACKFILL THE ABANDONED AND DEMOLISHED VALVE VAULT. BACKFILL SHALL BE FLOWABLE FILL AND COMPACTED PROPERLY UP TO THE PROPOSED CONCRETE DISCHARGE ASSEMBLY PAD.
9. THE CONTRACTOR SHALL COORDINATE WITH CENTERPOINT ENERGY TO TEMPORARILY DISCONNECT ELECTRICAL POWER AS NEEDED.
10. THE EXISTING WET WELL SHALL BE CLEANED OF ALL DEBRIS, WASTEWATER AND OTHER RESIDUES BY AN APPROVED CITY OF HOUSTON DISPOSAL CONTRACTOR.
11. THE CONTRACTOR SHALL DISPOSE OF ANY LIQUID OR SOLID WASTE FOUND IN THE WET WELL AT A DISPOSAL FACILITY LICENSED AND APPROVED BY THE STATE OF TEXAS. THE CONTRACTOR SHALL BE RESPONSIBLE FOR THE COST OF TRANSPORTATION, DISPOSAL AND TESTING REQUIRED BY STATE AND FEDERAL REGULATORY AGENCIES, AND BY THE DISPOSAL FACILITY.
12. PRIOR TO THE CLEAN-OUT AND CLEANING OF THE EXISTING LIFT STATION WET WELL, CONTRACTOR TO SUBMIT PROOF TO C.O.H. CONSTRUCTION PM THAT TRANSPORTER/HAULER TO BE USED FOR THE TRANSPORT OF THE CONTENTS OF THE WET WELL (I.E., SOLIDS, GRIT, SEWAGE SLUDGE, AND DOMESTIC SLUDGE, ETC.) IS REGISTERED BY THE TEXAS COMMISSION ON ENVIRONMENTAL QUALITY (TCEQ) AS A SLUDGE TRANSPORTER AND THE TRANSPORTER'S REGISTRATION IS CURRENT AND VALID DURING THE PERIOD OF PERFORMANCE.
13. CONTRACTOR SHALL SUBMIT PROOF OF SUBMISSION OF REQUIRED ASBESTOS/DEMOLITION NOTIFICATION FORM TO THE TEXAS DEPARTMENT OF STATE HEALTH SERVICES TO C.O.H. CONSTRUCTION PM. THE NOTIFICATION TO THE STATE MUST BE PROVIDED A MINIMUM OF 10 DAYS PRIOR TO THE STARTUP OF ANY DEMOLITION ACTIVITIES AT THE SITE.
14. CONTRACTOR SHALL OBTAIN CITY OF HOUSTON DEMOLITION PERMIT (SEE FORM CE 1075 REV. 01/01/2015 FOR GUIDELINES) OR SUBMIT PROOF OF NON-APPLICABILITY TO C.O.H. CONSTRUCTION PROJECT MANAGER PRIOR TO THE STARTUP OF DEMOLITION ACTIVITIES AT THE SITE. THE CONTRACTOR SHALL OBTAIN ANY STATE DEMOLITION PERMITS REQUIRED.

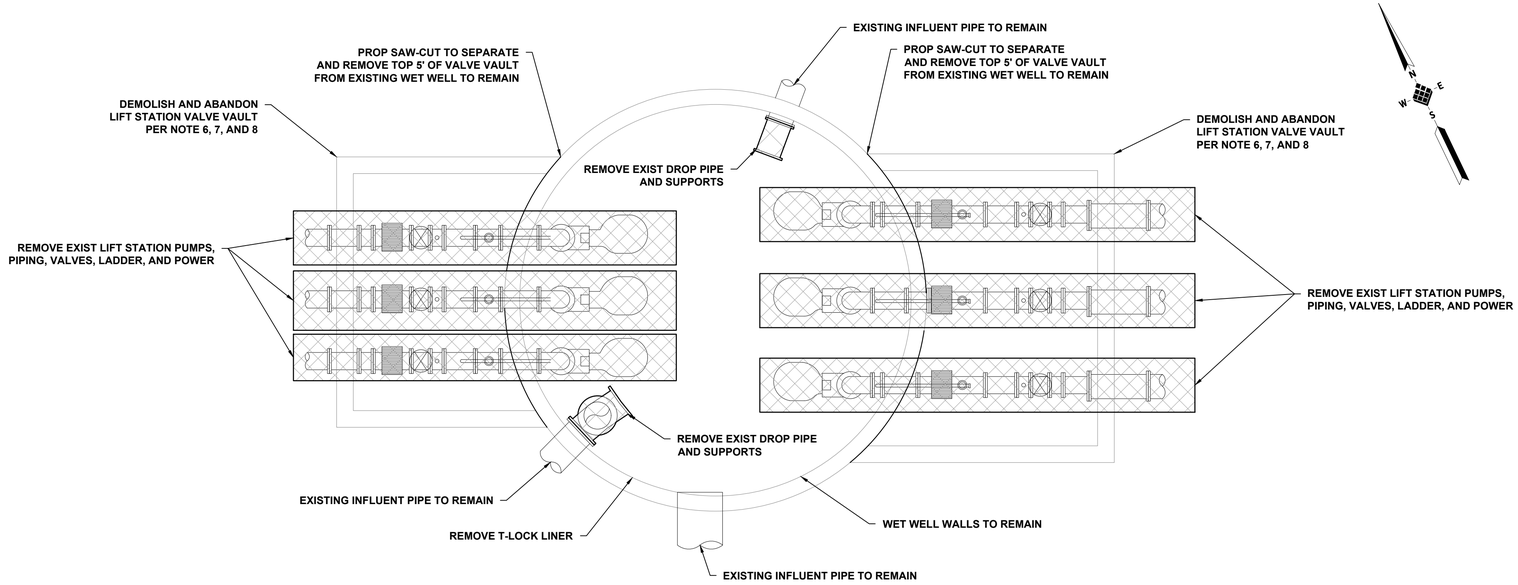

LIFT STATION PLAN

N.T.S.

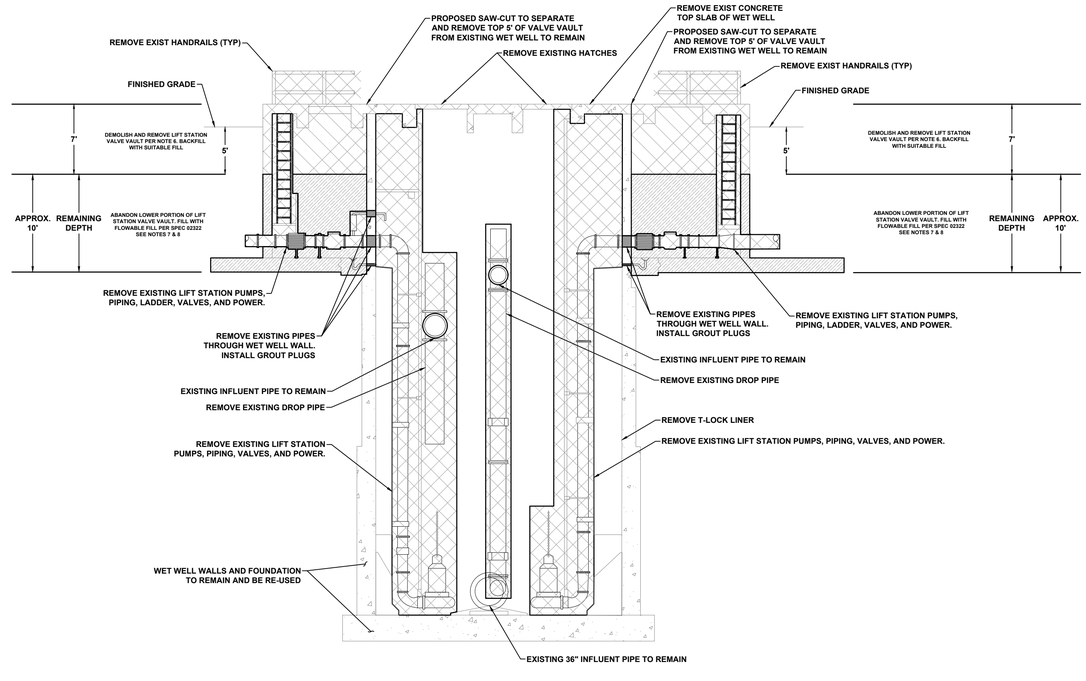

LIFT STATION SECTION

N.T.S.

NO.	DATE	REVISION	APP.

LEGEND

DEMOLITION AREA

ABANDON VALVE VAULT

IDS Engineering Group
13430 NW. Freeway, Suite 700
Houston, Tx. 77040
713.462.3178
TxEng Firm 2726 | TxSurv Firm 10110700

SURVEYED BY: KUO & ASSOCIATES, INC.
TBPE FIRM #F-4578; TBPLS FIRM #1007560

THIS DOCUMENT IS RELEASED FOR THE PURPOSE OF REVIEW UNDER THE AUTHORITY OF MARCEL KHOUW, P.E. 101807 ON 12/17/2025. IT IS NOT TO BE USED FOR CONSTRUCTION PURPOSES.

CITY OF HOUSTON
HOUSTON PUBLIC WORKS

LIFT STATION RENEWAL AND REPLACEMENT FY 2023

LOCKWOOD LIFT STATION SECTION DEMOLITION

WBS NUMBER	FOR CITY OF HOUSTON USE ONLY
R-000267-0179-4	
DRAWING SCALE	
HORIZ: AS NOTED VERT: N/A	
CITY OF HOUSTON PM	
NAWARAJ PANTA, P.E.	
SHEET NO. 16 OF 321	

DWG. NO. LCK-C-03

FILE PATH: \\idseg.com\FS\Projects\0000\005708500 CoH Lift Stations - FY 2023\CAD\DWG\PRODUCTION\16-LOCKWOOD SECTION DEMO.dwg

PLOTTED: 12/17/2025 9:12 AM

NOTES:

1. EXISTING LIFT STATION WET WELL TO REMAIN.
2. SEE ELECTRICAL PLANS ON DRAWINGS LCK-E-01-LCK-I-16 FOR ELECTRICAL IMPROVEMENTS.
3. CONTRACTOR SHALL COORDINATE WITH CENTERPOINT ENERGY TO DE-ENERGIZE THE LIFT STATION AND OTHER ELECTRICAL EQUIPMENT ON SITE.
4. SANITARY SEWER MANHOLES INSTALLED BELOW THE FLOODPLAIN ELEVATION SHALL HAVE WATERTIGHT MANHOLE FRAMES AND COVERS AS PER SPECIFICATION 02090.
5. CONTRACTOR SHALL FIELD VERIFY THE LOCATION OF THE HOLES DRILLED FOR THE RISER PIPE INSTALLATION THRU THE WET VAULT TOP SLAB.
6. REMOVE THE EXISTING FORCE MAIN TO THE NEAREST PIPE JOINT AND TIE PROP FORCE MAIN TO EXIST. USE RESTRAINED JOINTS.
7. THE EXISTING FORCE MAIN IS ASSUMED TO BE DUCTILE IRON BELL AND SPIGOT AND SHALL BE FIELD VERIFIED BY THE CONTRACTOR.
8. CONTRACTOR TO PROTECT EXISTING CONDUIT AND CABLE. IF CABLE OR CONDUIT IS DAMAGED DURING CONSTRUCTION, CONTRACTOR SHALL REPLACE AT NO ADDITIONAL COST TO THE CITY.
9. YARD LIGHT POLES, ELECTRICAL & COMMUNICATION POLES, AND SERVICE POLES SHALL BE ABLE TO WITHSTAND ULTIMATE DESIGN WIND SPEED OF 130 MPH, V(ULT).
10. COAT MANHOLE IN ACCORDANCE WITH SYSTEM 108 PER SPEC SECTION 09901 PART 2.03J.
11. SPECIAL RIGGING MAY BE REQUIRED FOR SETTING PROPOSED GENERATOR ON PROPOSED PLATFORM BENEATH LOCKWOOD DRIVE BRIDGE. APPROX. ELEVATION OF THE LOW CHORD OF THE BRIDGE IS 56.10' PER RD #45601R
12. CONTRACTOR TO SAW-CUT, REMOVE, AND REPLACE CONCRETE AS NECESSARY. NO SEPARATE PAY.
13. SAW-CUT AND REMOVE CONCRETE PAVEMENT AND INSTALL FOUNDATION AS SHOWN ON STRUCTURAL DRAWINGS LCK-S-07 AND LCK-S-08.

PROPOSED POINT TABLE

POINT	NORTHING	EASTING	DESCRIPTION	ELEVATION
1	13842779.58	3136498.27	45° BEND	6.17'
2	13842780.85	3136501.90	45° BEND	6.17'
3	13842779.95	3136503.87	TIE-IN-ELEV. (NFV)	+/- 6.17'
4	13842764.24	3136547.09	TIE-IN-ELEV. (NFV)	+/- 6.17'

LEGEND

- EXISTING CONCRETE PAVEMENT
- PROP. 7" THICK CONCRETE PAVEMENT W/6" CEMENT STABILIZED SAND SUBGRADE
- EXISTING CONCRETE SIDEWALK
- PROP. 4.5" THICK CONCRETE SIDEWALK
- PROP. 5" THICK CONCRETE PAVEMENT
- DETAIL NO. / SHEET NO.

10' 0' 10'
SCALE
1"=10'

BENCHMARK:

FLOODPLAIN REFERENCE MARK NUMBER 210025 IS A BRASS DISC IN CONCRETE STAMPED 210025, LOCATED AT THE NORTHWEST HEADWALL ON HIRSCH ROAD BRIDGE APPROXIMATELY 0.20 MILES SOUTH FROM THE INTERSECTION OF CLINTON DRIVE IN KEY MAP 494K IN THE BUFFALO BAYOU WATERSHED.

ELEV. 40.68 FEET NAVD 1988, 2001 ADJUSTMENT

FLOODPLAIN NOTE:

FLOODPLAIN REFERENCE MARK NUMBER 210025 IS A BRASS DISC IN CONCRETE LOCATED AT THE INTERSECTION OF CLINTON DR AND HIRSCH RD, TRAVEL SOUTH ON HIRSCH RD APPROXIMATELY .2 MILES TO THE BRIDGE

ELEV. 40.68 FEET NAVD 1988, 2001 ADJUSTMENT
100-YR ELEV. 20.00'
500-YR ELEV. 25.00'
FIRM PANEL: 48201C0690M

T.B.M #25:

SET "X" CUT IN CONC. LOCATED ON THE WEST SIDE OF GULF PALMS STREET APPROX. 630 FT SOUTH FROM THE INTERSECTION OF FUQUA STREET ELEV.= 36.67 FT.

EXISTING UTILITY NOTE:

EXISTING UNDERGROUND UTILITY INFORMATION (TYPE, SIZE & OWNERSHIP) ARE SHOWN APPROXIMATELY BASED ON THE AVAILABLE RECORD DRAWINGS AND FIELD VERIFICATION (WHERE FEASIBLE) WITHOUT PROBING AND EXCAVATION. NO WARRANTY IS MADE AS TO THE ACCURACY OR COMPLETENESS OF UTILITY LOCATION SHOWN ON THE DRAWING. CAUTION SHOULD BE EXERCISED WHEN EXCAVATING OR BORE AND JACKING IN THE VICINITY OF UNDERGROUND UTILITIES. OWNERS OF THE UTILITIES SHOULD BE NOTIFIED PRIOR TO SUCH ACTIVITIES. CALL UTILITY COORDINATING COMMITTEE AT 713-223-4567, AT LEAST 48 HOURS PRIOR TO EXCAVATING IN THE STREET RIGHT-OF-WAY.

NOTICE:
FOR YOUR SAFETY, YOU ARE REQUIRED BY TEXAS LAW TO CALL 811 AT LEAST 48 HOURS BEFORE YOU DIG SO THAT UNDERGROUND LINES CAN BE MARKED. THIS SIGNATURE DOES NOT FULFILL YOUR OBLIGATION TO CALL 811

VERIFICATION OF PRIVATE UTILITY LINES

Date

CenterPoint Energy natural gas utilities shown. (Gas service lines are not shown). This signature not be used for conflict verification.

Signature valid for six months.

Date

CenterPoint Energy/UNDERGROUND Electrical Facilities Verification ONLY. (This signature verifies existing underground facilities – not to be used for conflict verification)

Signature valid for six months.

Date

Approved for AT&T underground conduit facilities only.
Signature valid for one year.

NO.	DATE	REVISION	APP.

IDS Engineering Group
13430 NW. Freeway, Suite 700
Houston, Tx. 77040
713.462.3178
TxEng Firm 2726 | TxSurv Firm 10110700

THIS DOCUMENT IS RELEASED FOR THE PURPOSE OF REVIEW UNDER THE AUTHORITY OF MARCEL KHOUW, P.E. 101807 ON 12/17/2025. IT IS NOT TO BE USED FOR CONSTRUCTION PURPOSES.

SURVEYED BY: KUO & ASSOCIATES, INC.
TBPE FIRM #F-4578; TBPLS FIRM #1007560

CITY OF HOUSTON
HOUSTON PUBLIC WORKS

LIFT STATION RENEWAL AND REPLACEMENT FY 2023

LOCKWOOD LIFT STATION PROPOSED SITE PLAN

WBS NUMBER	FOR CITY OF HOUSTON USE ONLY
R-000267-0179-4	
DRAWING SCALE	
HORIZ: 1" = 10' VERT: N/A	
CITY OF HOUSTON PM	
NAWARAJ PANTA, P.E.	
DWG. NO. LCK-C-04	SHEET NO. 17 OF 321

FILE PATH: \\idseg.com\FS\Projects\0000\005708500 CoH Lift Stations - FY 2023\CAD\DWG\PRODUCTION\17-LOCKWOOD PROP SITE PLAN.dwg

PLOTTED: 12/17/2025 7:54 AM

LEGEND

- EXISTING CONCRETE PAVEMENT
- PROP. 7" THICK CONCRETE PAVEMENT
- EXISTING CONCRETE SIDEWALK
- PROP. 4.5" THICK CONCRETE SIDEWALK
- PROP. 7" THICK REPAIR CONCRETE PAVEMENT
- ON-SITE SHEET FLOW DIRECTION
- OFFSITE SHEET FLOW DIRECTION (SEE NOTE XX)
- 76 — EXISTING CONTOUR
- IPB–I — INLET PROTECTION BARRIER–STAGE I
- IPB–II — INLET PROTECTION BARRIER–STAGE II
- DRAINAGE AREA BOUNDARY
- XX — DRAINAGE AREA NO.
- XX.X — ACRES
- XX.X — 2–YR FLOW (CFS)
- XX.X — 100–YR FLOW (CFS)
- # / # — DETAIL NO. / DRAWING NO.
- SAW–CUT CONCRETE

NOTES:

1. RESPONSIBILITY FOR MAINTENANCE OF THE DETENTION FACILITY WILL BE BY THE PROPERTY OWNER.
2. SUBSURFACE DRAINAGE SYSTEMS ARE REQUIRED TO BE DRAINED IN 48 HOURS.
3. OFFSITE FLOW IS UNAFFECTED BY THE PROPOSED LIFT STATION STRUCTURE AND CONCRETE PAVING.
4. DRAINAGE AREA EXTENDS BEYOND THE LIMITS OF THIS SHEET.
5. CONTRACTOR TO SAW–CUT, REMOVE, AND REPLACE CONCRETE AS NECESSARY. NO SEPARATE PAY.
6. SAW–CUT AND REMOVE CONCRETE PAVEMENT AND INSTALL FOUNDATION AS SHOWN ON STRUCTURAL DRAWINGS LCK–S–07 AND LCK–S–08.

PROPOSED POINT TABLE

POINT	NORTHING	EASTING	DESCRIPTION	ELEVATION
1	13842833.11	3136405.33	PROP. CONCRETE DRIVEWAY	± 20.08'
2	13842799.81	3136459.13	PROP. TOP OF PAVEMENT	19.33'
3	13842800.64	3136459.69	PROP. TOP OF RETAINING WALL	23.00'
4	13842784.23	3136484.53	PROP. TOP OF RETAINING WALL	23.00'
5	13842783.34	3136484.11	PROP. TOP OF PAVEMENT	19.63'
6	13842756.10	3136472.08	PROP. TOP OF PAVEMENT/MEG	± 18.98'
7	13842754.31	3136468.34	PROP. TOP OF PAVEMENT/MEG	± 18.91'
8	13842767.45	3136441.77	PROP. TOP OF PAVEMENT/MEG	± 18.91'
9	13842815.46	3136421.04	PROP. TOP OF PAVEMENT	19.35'
10	13842791.86	3136446.75	PROP. TOP OF PAVEMENT	18.70'
11	13842737.96	3136517.59	PROP. TOP OF PAVEMENT	± 19.20'
12	13842728.55	3136535.24	PROP. TOP OF PAVEMENT	± 19.20'
13	13842716.19	3136528.66	PROP. TOP OF PAVEMENT	± 19.17'
14	13842725.60	3136511.01	PROP. TOP OF PAVEMENT	± 19.14'
15	13842756.90	3136484.27	PROP. CORNER OF VALVE PAD	21.41'
16	13842776.28	3136494.08	PROP. CORNER OF VALVE PAD	21.41'
17	13842753.50	3136543.91	PROP. CORNER OF VALVE PAD	21.41'
18	13842731.90	3136532.40	PROP. CORNER OF VALVE PAD	21.41'
19	13842738.95	3136507.22	PROP. STAIRS	21.41'
20	13842737.24	3136506.35	PROP. STAIRS/MEG	± 19.20'
21	13842738.50	3136503.86	PROP. STAIRS/MEG	± 19.20'
22	13842740.18	3136504.71	PROP. STAIRS	21.41'

STORMWATER DETENTION CALCULATIONS
- GROSS AREA 0.6000 AC
- PROP. IMPERVIOUS AREA 0.0607 AC
- STORAGE RATE 0.7500 AC-FT/AC
- STORAGE REQUIRED 0.0455 AC-FT

DETENTION CREDIT
- EXIST. IMPERVIOUS AREA REMOVED 0.0481 AC
- DETENTION CREDIT RATE 0.4000 AC-FT/AC
- DETENTION CREDIT VOLUME 0.0192 AC-FT

MITIGATION CALCULATIONS
VOLUME OF FILL = (125 SF)(2.4 FT) + (250 SF)(2.4 FT)
V_F=0.0207 AC-FT
- VOLUME OF CUT = 699 FT^3 (DEMO OF EXIST MCC BUILDING)
V_C=0.0160 AC-FT
- VOLUME REQUIRED
V_F–V_C = 0.0207 - 0.0160 = 0.0047 AC-FT

TOTAL DETENTION
- REQUIRED = 0.0455 AC-FT - 0.0192 AC-FT + 0.0047 AC-FT = 0.0310 AC-FT
- PROVIDED = 0.0335 AC-FT

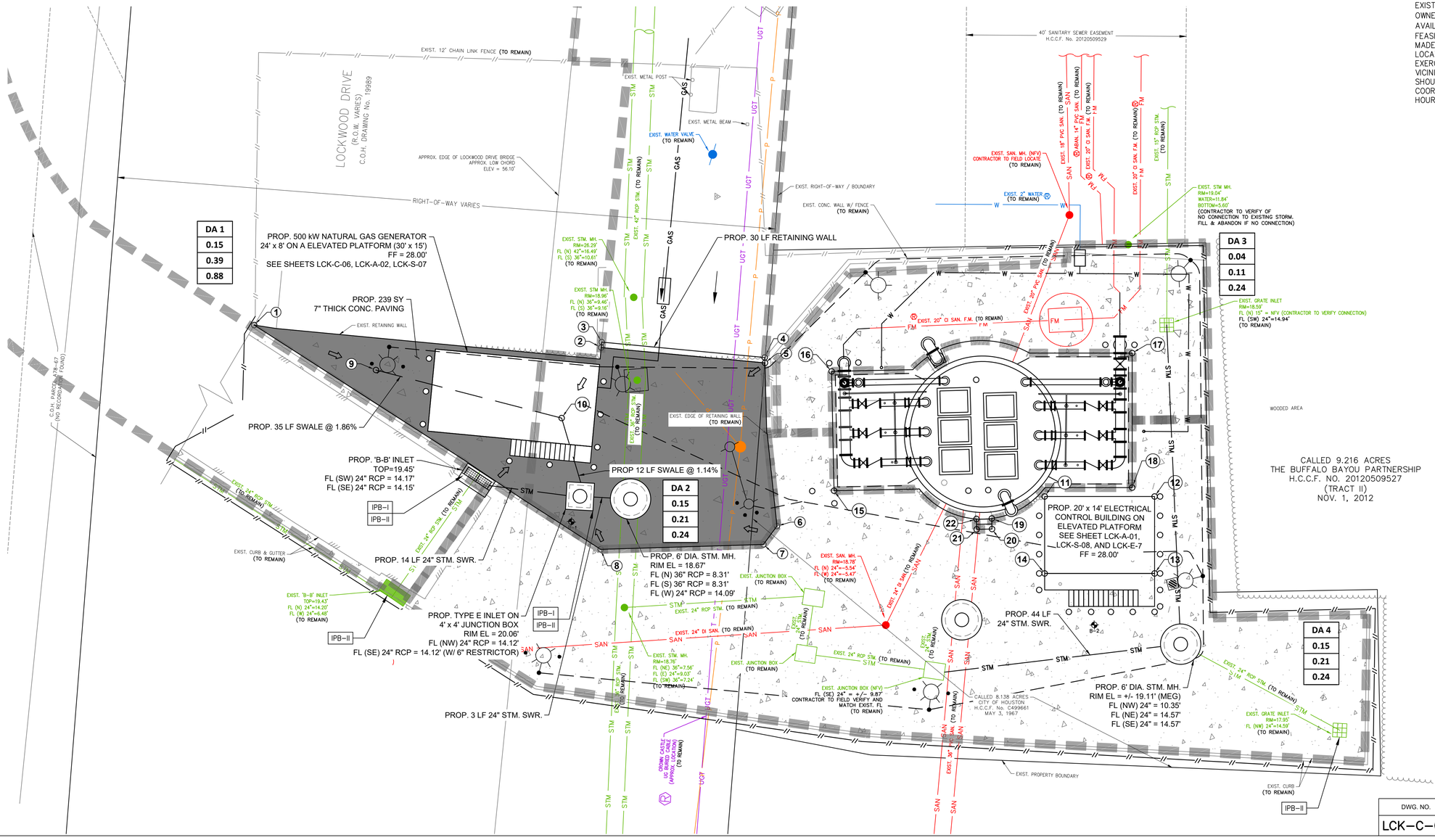

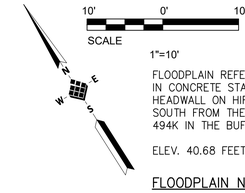

FLOODPLAIN REFERENCE MARK NUMBER 210025 IS A BRASS DISC IN CONCRETE STAMPED 210025, LOCATED AT THE NORTHWEST HEADWALL ON HIRSCH ROAD BRIDGE APPROXIMATELY 0.20 MILES SOUTH FROM THE INTERSECTION OF CLINTON DRIVE IN KEY MAP 494K IN THE BUFFALO BAYOU WATERSHED.

ELEV. 40.68 FEET NAVD 1988, 2001 ADJUSTMENT

FLOODPLAIN NOTE:

FLOODPLAIN REFERENCE MARK NUMBER 210025 IS A BRASS DISC IN CONCRETE LOCATED AT THE INTERSECTION OF CLINTON DR AND HIRSCH RD, TRAVEL SOUTH ON HIRSCH RD APPROXIMATELY .2 MILES TO THE BRIDGE

ELEV. 40.68 FEET NAVD 1988, 2001 ADJUSTMENT
100–YR ELEV. 20.00'
500–YR ELEV. 25.00'
FIRM PANEL: 48201C0690N

SET "X" CUT IN CONC. LOCATED ON THE WEST SIDE OF GULF PALMS STREET APPROX. 630 FT SOUTH FROM THE INTERSECTION OF FUQUA STREET
ELEV.= 36.67 FT.

EXISTING UTILITY NOTE:

EXISTING UNDERGROUND UTILITY INFORMATION (TYPE, SIZE & OWNERSHIP) ARE SHOWN APPROXIMATELY BASED ON THE AVAILABLE RECORD DRAWINGS AND FIELD VERIFICATION (WHERE FEASIBLE) WITHOUT PROBING AND EXCAVATION. NO WARRANTY IS MADE AS TO THE ACCURACY OR COMPLETENESS OF UTILITY LOCATION SHOWN ON THE DRAWING. CAUTION SHOULD BE EXERCISED WHEN EXCAVATING OR BORE AND JACKING IN THE VICINITY OF UNDERGROUND UTILITIES. OWNERS OF THE UTILITIES SHOULD BE NOTIFIED PRIOR TO SUCH ACTIVITIES. CALL UTILITY COORDINATING COMMITTEE AT 713–223–4567, AT LEAST 48 HOURS PRIOR TO EXCAVATING IN THE STREET RIGHT–OF–WAY.

NO.	DATE	REVISION	APP.

NOTICE:
FOR YOUR SAFETY, YOU ARE REQUIRED BY TEXAS LAW TO CALL 811 AT LEAST 48 HOURS BEFORE YOU DIG SO THAT UNDERGROUND LINES CAN BE MARKED. THIS SIGNATURE DOES NOT FULFILL YOUR OBLIGATION TO CALL 811

VERIFICATION OF PRIVATE UTILITY LINES

Date

CenterPoint Energy natural gas utilities shown. (Gas service lines are not shown). This signature not be used for conflict verification.

Signature valid for six months.

Date

CenterPoint Energy/UNDERGROUND Electrical Facilities Verification ONLY. (This signature verifies existing underground facilities – not to be used for conflict verification)

Signature valid for six months.

Date

Approved for AT&T underground conduit facilities only.
Signature valid for one year.

IDS Engineering Group
13430 NW. Freeway, Suite 700
Houston, Tx. 77040
713.462.3178
TxEng Firm 2726 | TxSurv Firm 10110700

SURVEYED BY: KUO & ASSOCIATES, INC.
TBPE FIRM #F–4578; TBPLS FIRM #1007560

THIS DOCUMENT IS RELEASED FOR THE PURPOSE OF REVIEW UNDER THE AUTHORITY OF MARCEL KHOUW, P.E. 101807 ON 12/17/2025. IT IS NOT TO BE USED FOR CONSTRUCTION PURPOSES.

CITY OF HOUSTON
HOUSTON PUBLIC WORKS

LIFT STATION RENEWAL AND REPLACEMENT FY 2023

LOCKWOOD LIFT STATION GRADING AND DRAINAGE PLAN

WBS NUMBER	FOR CITY OF HOUSTON USE ONLY
R–000267–0179–4	
DRAWING SCALE	
HORIZ: 1" = 10' VERT: N/A	
CITY OF HOUSTON PM	
NAWARAJ PANTA, P.E.	
DWG. NO. LCK–C–05	SHEET NO. 18 OF 321

FILE PATH: \\idseg.com\FS\Projects\0000\005708500 CoH Lift Stations – FY 2023\CAD\DWG\PRODUCTION\18–LOCKWOOD GRADING.dwg

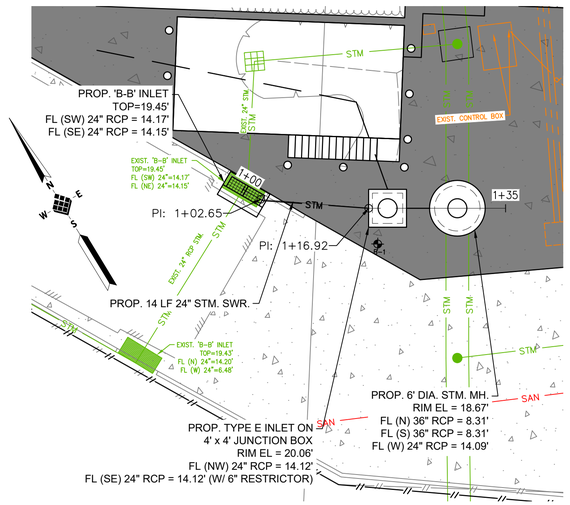

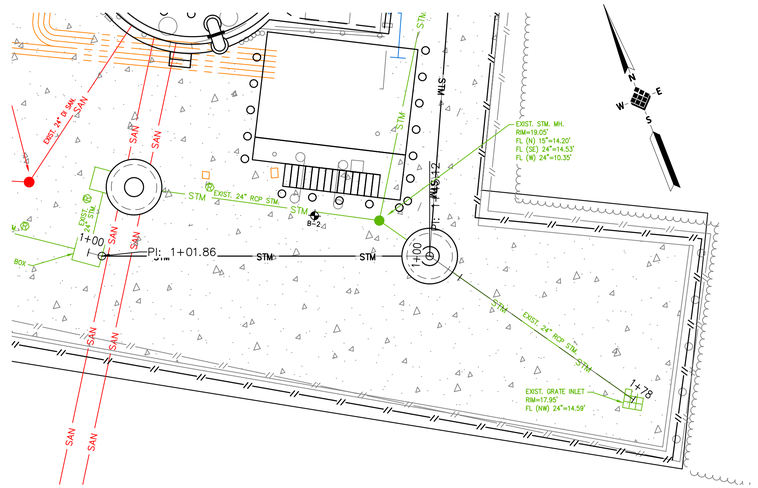

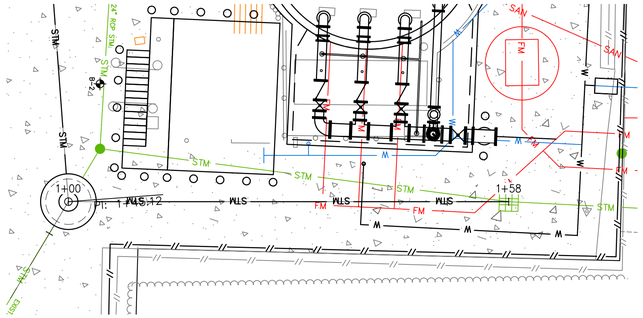

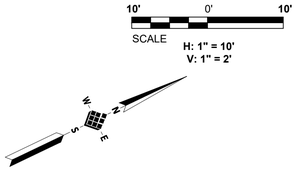

FOR PERMITTING REVIEW ONLY - TO BE SUBMITTED AT 90%

NO.	DATE	REVISION	APP.

IDS Engineering Group
13430 NW. Freeway, Suite 700
Houston, Tx. 77040
713.462.3178
TxEng Firm 2726 | TxSurv Firm 10110700

SURVEYED BY: KUO & ASSOCIATES, INC.
TBPE FIRM #F-4578; TBPLS FIRM #1007560

THIS DOCUMENT IS RELEASED FOR THE PURPOSE OF REVIEW UNDER THE AUTHORITY OF MARCEL KHOUW, P.E. 101807 ON 12/17/2025. IT IS NOT TO BE USED FOR CONSTRUCTION PURPOSES.

CITY OF HOUSTON
HOUSTON PUBLIC WORKS

LIFT STATION RENEWAL AND REPLACEMENT FY 2023

LOCKWOOD LIFT STATION PLAN AND PROFILE

WBS NUMBER	FOR CITY OF HOUSTON USE ONLY
R-000267-0179-4	
DRAWING SCALE	
HORIZ: 1" = 10' VERT: 1" = 2'	
CITY OF HOUSTON PM	
NAWARAJ PANTA, P.E.	
SHEET NO. 19 OF 321	

DWG. NO.
LCK-C-06

PLOTTED: 12/17/2025 7:55 AM

FILE PATH: \\idseg.com\FS\Projects\0000\005708500 CoH Lift Stations - FY 2023\CAD\DWG\PRODUCTION\19-LOCKWOOD PLAN AND PROFILE.dwg

PLOTTED: 12/17/2025 7:55 AM

STORM SEWER CALCULATIONS
IDS ENGINEERING GROUP

CLIENT NAME: **CITY OF HOUSTON**
PROJECT NAME: **WBS NO. R-000267-0179-3 - LOCKWOOD LIFT STATION**
IDS JOB NO: **0057-085-00**
DATE PRINTED: November 17, 2025
DATE REVISED: November 17, 2025 BY: CM

SELECT STORM EVENT FREQUENCY: 2 year
SELECT APPROPRIATE LAND USE: Light Industrial
ENTER DESIGN CURB HEIGHT (inches): 0

Re-Generate Formulas

Line	Manhole or Inlet Number U / S	D / S	Reach Length (feet)	Diameter or Rise (inches)	Span (inches)	No. of Barrels	Pipe Material	Pipe Grade Minimum (%)	Pipe Grade Actual (%)	Area (acres)	Sum of Area (acres)	Runoff Coeff.	Sum of C x Area (acres)	Travel Time (minutes)	Time of Concentration (minutes)	Intensity (in./hr.)	Sum of Flows (cfs)	Design Flow (cfs)	Design Velocity (fps)	Actual Velocity (fps)	Hydraulic Gradient (%)	Change in Head (feet)	Upstream Top of Grate (feet)	Hydraulic Grade Upstream (feet)	Hydraulic Grade Downstream (feet)	Manhole Drop (D/S) (feet)	Pipe Flowline Upstream (feet)	Pipe Flowline Downstream (feet)	Depth from Gutter to HGL (feet)	Depth of Cover (feet)	Upstream NG Elev. (feet)	Depth from NG to HGL (feet)
1	B-B INLET	E INLET	14.00	24		1	RCP	0.180%	0.180%	0.15	0.15	0.65	0.10	1.88	22.2	4.00	0.39	9.60	3.06	0.12	0.000%	0.00	19.45	16.12	16.12	0.00	14.15	14.12	3.33	3.30	19.45	3.33
2	E INLET	***STM MH***	3.00	24		1	RCP	0.180%	1.000%	0.26	0.41	0.65	0.27	0.15	24.0	3.83	1.02	22.62	7.20	0.32	0.002%	0.00	18.56	16.09	16.09	0.00	***14.12***	***14.09***	2.47	2.44	18.56	2.47
3	A INLET	STM MH	58.00	24		1	RCP	0.180%	0.638%	0.04	0.04	0.65	0.03	28.21	20.7	4.14	0.11	18.07	5.75	0.03	0.000%	0.00	18.59	16.57	16.57	0.00	***14.94***	***14.57***	2.02	1.65	18.59	2.02
4	STM MH	***JUNC. BOX***	44.00	24		1	RCP	0.180%	1.091%	0.15	0.19	0.65	0.12	7.30	48.9	2.55	0.32	23.63	7.52	0.10	0.000%	0.00	19.11	11.87	11.87	0.00	***10.35***	***9.87***	7.24	6.76	19.11	7.24

NOTES:
1. This spreadsheet has been developed using the City of Houston criteria outlined in the November 2023 Infrastructure Design Manual. The Rational Method has been used to calculate flows, and Manning's Formula for pipes flowing full has been used to calculate velocities.
2. This spreadsheet calculates rainfall intensity using the b, d, and e constants for Harris County and the City of Houston, as outlined in Appendix H of the Harris County Infrastructure Regulations, and Chapter 9 of the November 2023 City of Houston Infrastructure Design Manual.
3. Minimum storm sewer grades and maximum velocities as established in the City of Houston design criteria have been used to establish the grades used in this system.
4. Land Use "SFR" represents Single-Family Residential development. Land Use "MFR" represents Multi-Family Residential development.
5. Design flow and velocity are based entirely on pipe grade and represent the conditior when pipe is flowing full with the hydraulic grade line equal to the pipe grade, and are used to demonstrate that the pipe slopes used in the calculations conform to the City of Houston minimum and maximum standards.

Runoff Coefficient Table	
Land Use	C
SFR (> ½ ac. lots)	0.35
SFR (¼ - ½ ac. lots)	0.45
SFR (< ¼ ac. lots)	0.55
MFR (< 20 d.u./ac.)	0.65
MFR (>= 20 d.u./ac.)	0.80
Business Districts	0.80
Light Industrial	0.65
Heavy Industrial	0.75
Railroad Yard Areas	0.30
Parks/Open Areas	0.18
Land Use Varies	ENTER

Pipe Material	Mannings "n" Value	Pipe Description
CLAY	0.012	Extra Strength Vitrified Clay Pipe
CMP	0.024	Corrugated Metal Pipe
CMPSI	0.013	CMP w/ Smooth Interior
HDPE	0.013	High Density Polyethylene Pipe
PVC	0.013	Polyvinyl Chloride Pipe
RCA	0.013	Reinforced Concrete Arch Pipe
RCB	0.015	Reinforced Concrete Box Culvert
RCE	0.013	Reinforced Concrete Elliptical Pipe
RCP	0.013	Reinforced Concrete Pipe

Rainfall Freq. (yrs)	b	d	e
2 year	***48.35***	***9.07***	***0.7244***
5 year	52.32	7.88	0.6900
10 year	54.68	6.96	0.6623
25 year	57.79	5.89	0.6294
50 year	61.00	5.46	0.6096
100 year	60.66	4.44	0.5797
500 year	62.17	2.95	0.5196

Master Spreadsheet - Storm Sewer Calculations Updated 02/10/2025
\\idseg.com\FS\Projects\0000\005708500 CoH Lift Stations - FY 2023\Eng\Calcs\Drainage\[1. Lockwood Drainage Calcs.xlsx]CALCULATIONS

STORM SEWER CALCULATIONS
IDS ENGINEERING GROUP

CLIENT NAME: **CITY OF HOUSTON**
PROJECT NAME: **WBS NO. R-000267-0179-3 - LOCKWOOD LIFT STATION**
IDS JOB NO: **0057-085-00**
DATE PRINTED: November 17, 2025
DATE REVISED: November 17, 2025 BY: CM

SELECT STORM EVENT FREQUENCY: 100 year
SELECT APPROPRIATE LAND USE: Light Industrial
ENTER DESIGN CURB HEIGHT (inches): 0

Re-Generate Formulas

Line	Manhole or Inlet Number U / S	D / S	Reach Length (feet)	Diameter or Rise (inches)	Span (inches)	No. of Barrels	Pipe Material	Pipe Grade Minimum (%)	Pipe Grade Actual (%)	Area (acres)	Sum of Area (acres)	Runoff Coeff.	Sum of C x Area (acres)	Travel Time (minutes)	Time of Concentration (minutes)	Intensity (in./hr.)	Sum of Flows (cfs)	Design Flow (cfs)	Design Velocity (fps)	Actual Velocity (fps)	Hydraulic Gradient (%)	Change in Head (feet)	Upstream Top of Grate (feet)	Hydraulic Grade Upstream (feet)	Hydraulic Grade Downstream (feet)	Manhole Drop (D/S) (feet)	Pipe Flowline Upstream (feet)	Pipe Flowline Downstream (feet)	Depth from Gutter to HGL (feet)	Depth of Cover (feet)	Upstream NG Elev. (feet)	Depth from NG to HGL (feet)
1	B-B INLET	E INLET	14.00	24		1	RCP	0.180%	0.180%	0.15	0.15	0.65	0.10	0.83	22.2	9.06	0.88	9.60	3.06	0.28	0.002%	0.00	19.45	16.12	16.12	0.00	14.15	14.12	3.33	3.30	19.45	3.33
2	E INLET	***STM MH***	3.00	24		1	RCP	0.180%	1.000%	0.26	0.41	0.65	0.27	0.07	23.0	8.90	2.37	22.62	7.20	0.75	0.011%	0.00	18.56	16.09	16.09	0.00	***14.12***	***14.09***	2.47	2.44	18.56	2.47
3	A INLET	STM MH	58.00	24		1	RCP	0.180%	0.638%	0.04	0.04	0.65	0.03	12.48	20.7	9.36	0.24	18.07	5.75	0.08	0.000%	0.00	18.59	16.57	16.57	0.00	***14.94***	***14.57***	2.02	1.65	18.59	2.02
4	STM MH	***JUNC. BOX***	44.00	24		1	RCP	0.180%	1.091%	0.15	0.19	0.65	0.12	2.52	33.1	7.41	0.92	23.63	7.52	0.29	0.002%	0.00	19.11	11.87	11.87	0.00	***10.35***	***9.87***	7.24	6.76	19.11	7.24

NOTES:
1. This spreadsheet has been developed using the City of Houston criteria outlined in the November 2023 Infrastructure Design Manual. The Rational Method has been used to calculate flows, and Manning's Formula for pipes flowing full has been used to calculate velocities.
2. This spreadsheet calculates rainfall intensity using the b, d, and e constants for Harris County and the City of Houston, as outlined in Appendix H of the Harris County Infrastructure Regulations, and Chapter 9 of the November 2023 City of Houston Infrastructure Design Manual.
3. Minimum storm sewer grades and maximum velocities as established in the City of Houston design criteria have been used to establish the grades used in this system.
4. Land Use "SFR" represents Single-Family Residential development. Land Use "MFR" represents Multi-Family Residential development.
5. Design flow and velocity are based entirely on pipe grade and represent the conditior when pipe is flowing full with the hydraulic grade line equal to the pipe grade, and are used to demonstrate that the pipe slopes used in the calculations conform to the City of Houston minimum and maximum standards.

Runoff Coefficient Table	
Land Use	C
SFR (> ½ ac. lots)	0.35
SFR (¼ - ½ ac. lots)	0.45
SFR (< ¼ ac. lots)	0.55
MFR (< 20 d.u./ac.)	0.65
MFR (>= 20 d.u./ac.)	0.80
Business Districts	0.80
Light Industrial	0.65
Heavy Industrial	0.75
Railroad Yard Areas	0.30
Parks/Open Areas	0.18
Land Use Varies	ENTER

Pipe Material	Mannings "n" Value	Pipe Description
CLAY	0.012	Extra Strength Vitrified Clay Pipe
CMP	0.024	Corrugated Metal Pipe
CMPSI	0.013	CMP w/ Smooth Interior
HDPE	0.013	High Density Polyethylene Pipe
PVC	0.013	Polyvinyl Chloride Pipe
RCA	0.013	Reinforced Concrete Arch Pipe
RCB	0.015	Reinforced Concrete Box Culvert
RCE	0.013	Reinforced Concrete Elliptical Pipe
RCP	0.013	Reinforced Concrete Pipe

Rainfall Freq. (yrs)	b	d	e
2 year	48.35	9.07	0.7244
5 year	52.32	7.88	0.6900
10 year	54.68	6.96	0.6623
25 year	57.79	5.89	0.6294
50 year	61.00	5.46	0.6096
100 year	***60.66***	***4.44***	***0.5797***
500 year	62.17	2.95	0.5196

Master Spreadsheet - Storm Sewer Calculations Updated 02/10/2025
\\idseg.com\FS\Projects\0000\005708500 CoH Lift Stations - FY 2023\Eng\Calcs\Drainage\[1. Lockwood Drainage Calcs.xlsx]CALCULATIONS

NO.	DATE	REVISION	APP.

IDS Engineering Group
13430 NW. Freeway, Suite 700
Houston, Tx. 77040
713.462.3178
TxEng Firm 2726 | TxSurv Firm 10110700

SURVEYED BY: KUO & ASSOCIATES, INC.
TBPE FIRM #F-4578; TBPLS FIRM #1007560

THIS DOCUMENT IS RELEASED FOR THE PURPOSE OF REVIEW UNDER THE AUTHORITY OF MARCEL KHOUW, P.E. 101807 ON 12/17/2025. IT IS NOT TO BE USED FOR CONSTRUCTION PURPOSES.

CITY OF HOUSTON
HOUSTON PUBLIC WORKS

LIFT STATION RENEWAL AND REPLACEMENT FY 2023

LOCKWOOD LIFT STATION DRAINAGE CALCULATIONS

WBS NUMBER	FOR CITY OF HOUSTON USE ONLY
R-000267-0179-4	
DRAWING SCALE	
HORIZ: VALUE VERT: N/A	
CITY OF HOUSTON PM	
NAWARAJ PANTA, P.E.	
SHEET NO. 20 OF 321	

DWG. NO. LCK-C-07

FILE PATH: \\idseg.com\FS\Projects\0000\005708500 CoH Lift Stations - FY 2023\CAD\DWG\PRODUCTION\20-LOCKWOOD CALCULATIONS.dwg

PLOTTED: 12/17/2025 7:55 AM

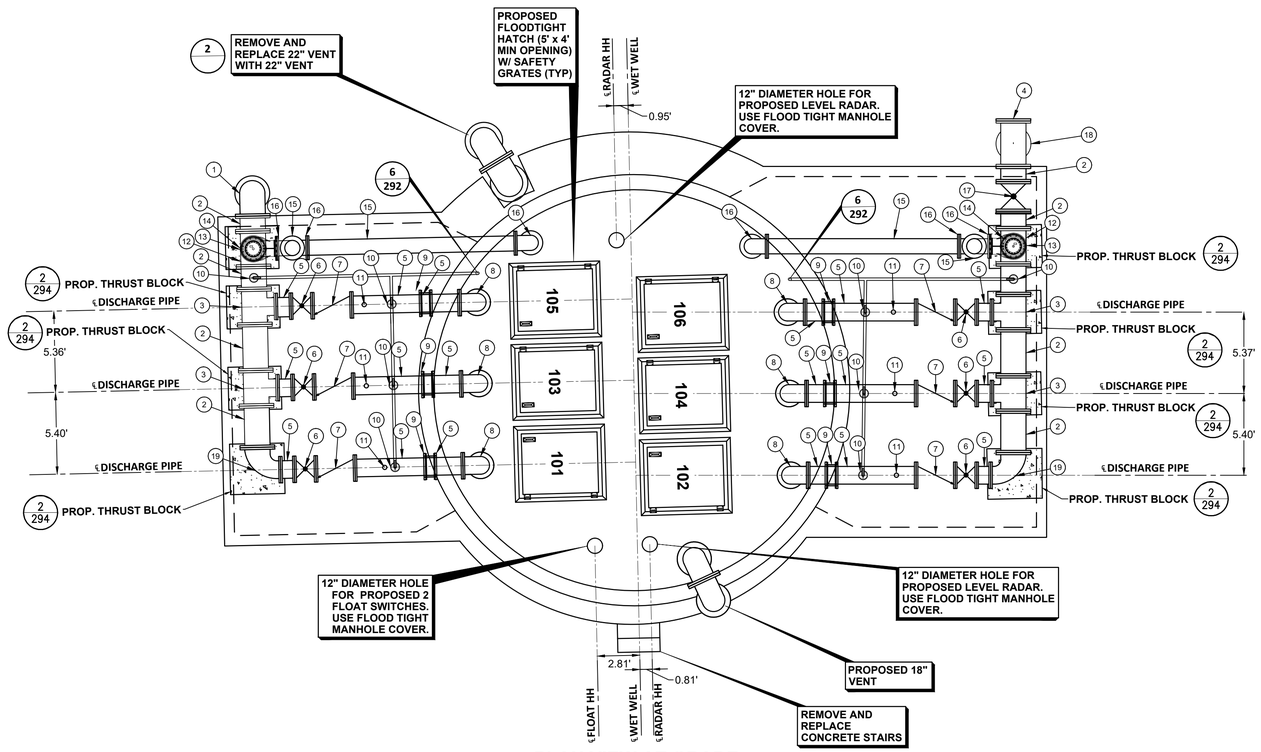

PLAN VIEW AT GRADE

SCALE: 1"=5'

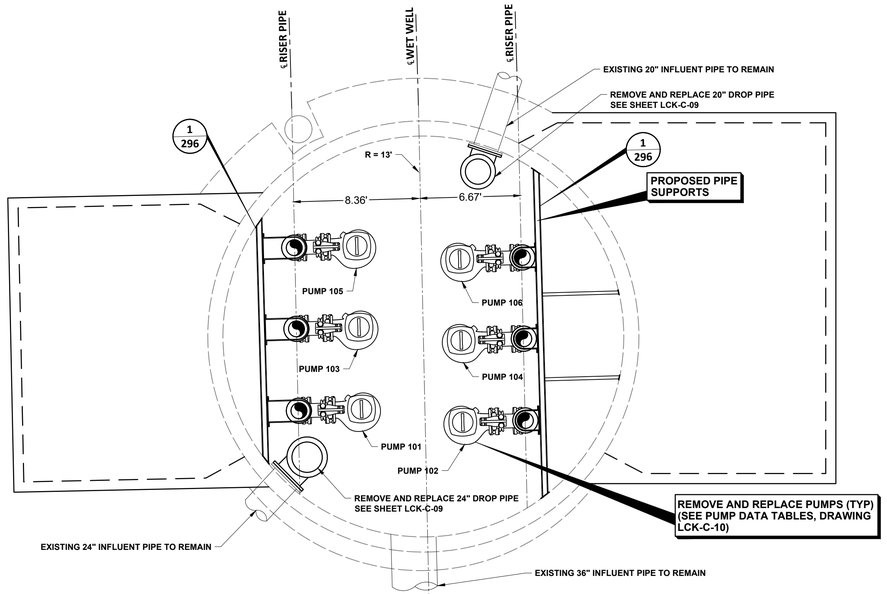

SECTION A-A VIEW A

1" = 5'

NOTES:

1. ABRASIVE BLAST AND COAT ALL PIPING AND FITTINGS.
2. CONTRACTOR TO VERIFY DIMENSIONS REQUIRED TO INSTALL AND OPERATE VALVES.
3. EXISTING LIFT STATION WET WELL STRUCTURE TO REMAIN.
4. UV PROTECTIVE COATINGS ARE REQUIRED BY THE CITY OF HOUSTON ON ALL VENT PIPES.
5. LABEL HATCHES WITH THE CORRESPONDING PUMP NUMBER USING A 12–INCH BY 6–INCH ALUMINUM PLATE ENGRAVED WITH 1.5–INCH LETTERING WELDED TO THE HATCH.
6. CONTRACTOR TO CONFIRM SIZE AND LOCATION OF THE WET WELL HATCHES PER HATCH AND PUMP MANUFACTURER REQUIREMENTS.
7. PUMP AND ANCHOR BOLTS ARE TO BE ADHESIVE TYPE, AND EMBEDDED IN THE CONCRETE SLAB. CONTRACTOR TO SUBMIT DESIGN OF PUMP ANCHOR BOLTS AND PATTERN, INCLUDING CALCULATIONS, CURING SHOP DRAWING SUBMISSION.
8. ALL PIPING IN THE WET WELL SHALL BE FLANGED. NO FLANGED COUPLING ADAPTORS, OR VICTAULIC STYLE COUPLINGS SHALL BE PERMITTED INSIDE OF THE WET WELL.
9. ACCESS HATCHES SHALL BE FOREST GREEN. SAFETY GRATING SHALL BE FURNISHED WITH SAFETY ORANGE POWDER COAT FINISH.

ITEMS TO BE REMOVED & REPLACED		
KEYED NOTES	ITEM	QTY
1	90° BEND (20")	2
2	SPOOL PIECE (20")	6
3	TEE (20" x 14")	5
4	BLIND FLANGE (20")	1
5	SPOOL PIECE (14")	18
6	PLUG VALVE (14")	6
7	CHECK VALVE (14")	6
8	90° BEND (14")	6
9	FLEXIBLE COUPLING (14")	6
10	3" AIR RELEASE & VACUUM VALVE ASSEMBLY	8
11	PRESSURE GAUGE ASSEMBLY	6
12	TEE (20" x 12")	1
13	PLUG VALVE (12")	2
14	SURGE RELIEF VALVE (12") SET TO OPEN AT 50 PSI	2
15	SPOOL PIECE (12")	4
16	90° BEND (12")	6
17	PLUG VALVE (20")	1
18	TEE (20" x 20")	1
19	REDUCING 90° BEND (20" x 14")	2

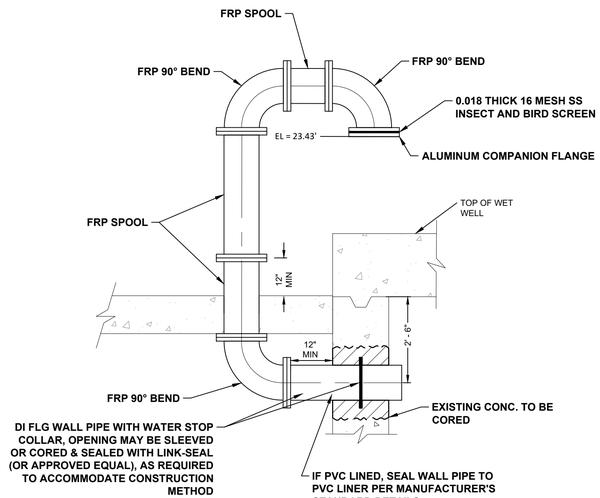

EXISTING STRUCTURE PENETRATION 2

N.T.S.

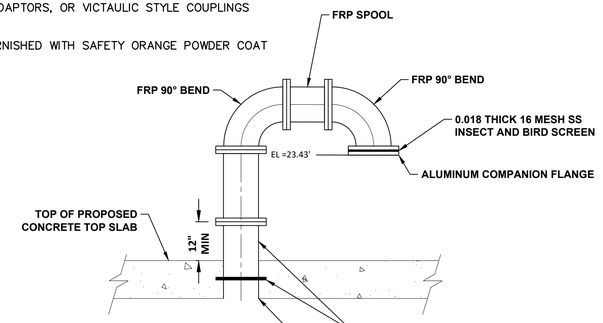

PROPOSED STRUCTURE PENETRATION 1

N.T.S.

LEGEND

- # / # — DETAIL NO. / SHEET NO.
- EXISTING CONCRETE
- REMOVE AND REPLACE CONCRETE AS PER DETAIL 11, SHEET XX.

NO.	DATE	REVISION	APP.

IDS Engineering Group
13430 NW. Freeway, Suite 700
Houston, Tx. 77040
713.462.3178
TxEng Firm 2726 | TxSurv Firm 10110700

SURVEYED BY: KUO & ASSOCIATES, INC.
TBPE FIRM #F-4578; TBPLS FIRM #1007560

THIS DOCUMENT IS RELEASED FOR THE PURPOSE OF REVIEW UNDER THE AUTHORITY OF MARCEL KHOUW, P.E. 101807 ON 12/17/2025. IT IS NOT TO BE USED FOR CONSTRUCTION PURPOSES.

CITY OF HOUSTON
HOUSTON PUBLIC WORKS

LIFT STATION RENEWAL AND REPLACEMENT FY 2023

LOCKWOOD LIFT STATION PLAN AT GRADE AND BASE

WBS NUMBER	FOR CITY OF HOUSTON USE ONLY
R–000267–0179–4	
DRAWING SCALE	
HORIZ: AS NOTED VERT: N/A	
CITY OF HOUSTON PM	
NAWARAJ PANTA, P.E.	
SHEET NO. 21 OF 321	

DWG. NO. LCK–C–08

FILE PATH: \\dseg.com\FS\Projects\0000\0057085OO CoH Lift Stations – FY 2023\CAD\DWG\PRODUCTION\21–LOCKWOOD PLAN AT GRADE.dwg

PLOTTED: 12/17/2025 7:56 AM

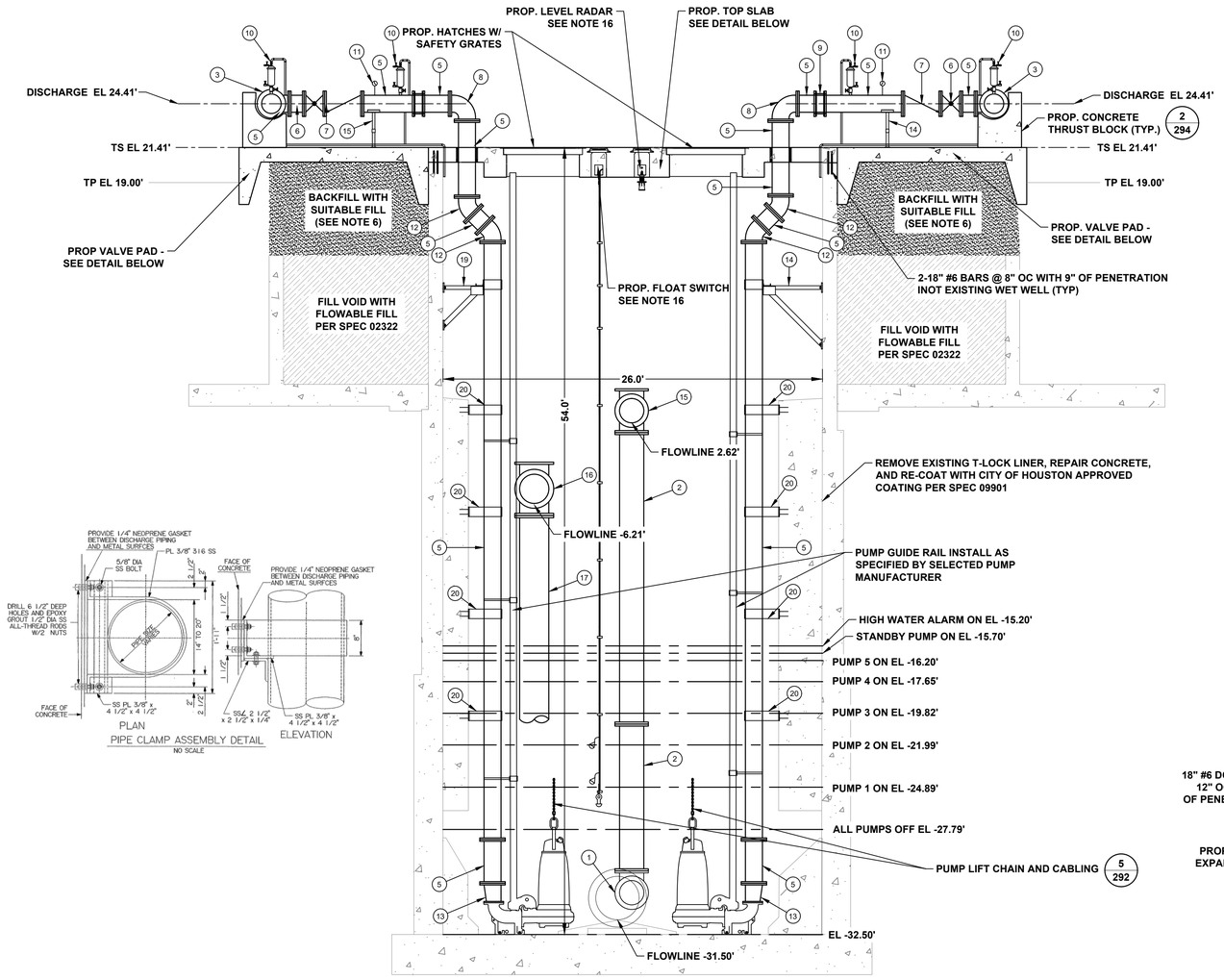

SECTIONAL ELEVATION A

SCALE: 1" = 5'

PIPE CLAMP ASSEMBLY DETAIL

NO SCALE

ITEMS TO BE REMOVED & REPLACED		
KEYED NOTES	ITEM	QTY
1	90° BEND (20")	1
2	SPOOL PIECE (20")	2
3	TEE (20" x 14")	2
4	TEE (20" x 14") W/ BLIND FLANGE (20")	0
5	SPOOL PIECE (14")	15
6	PLUG VALVE (14")	2
7	CHECK VALVE (14")	2
8	90° BEND (14")	2
9	FLEXIBLE COUPLING (14")	2
10	3" AIR RELEASE & VACUUM VALVE ASSEMBLY	4
11	PRESSURE GAUGE ASSEMBLY	6
12	45° BEND (14")	4
13	ECCENTRIC REDUCER (14" x 12")	2
14	ADJUSTABLE PIPE SUPPORT	6
15	TEE (20" x 20")	1
16	TEE (24" x 24")	1
17	SPOOL PIECE (24")	2
18	90° BEND (24") (NOT SHOWN FOR CLARITY, SEE NOTE 11)	1
19	PIPE CLAMP ASSEMBLY (SEE DETAIL THIS SHEET)	24
20	316 STAINLESS STEEL SUPPORT	6

NOTES:

1. ABRASIVE BLAST AND COAT ALL PIPING AND FITTINGS NOT BEING REPLACED IN WET WELL.
2. CONTRACTOR TO VERIFY DIMENSIONS REQUIRED TO INSTALL AND OPERATE VALVES.
3. EXISTING LIFT STATION WET WELL STRUCTURE TO REMAIN.
4. UV PROTECTIVE COATINGS ARE REQUIRED BY THE CITY OF HOUSTON ON ALL VENT PIPES.
5. LABEL HATCHES WITH THE CORRESPONDING PUMP NUMBER USING A 12–INCH BY 6–INCH ALUMINUM PLATE ENGRAVED WITH 1.5–INCH LETTERING WELDED TO THE HATCH.
6. FILL VOID LEFT BY REMOVAL OF EXISTING VALVE VAULT WITH SUITABLE FILL.
7. SEE ELECTRICAL PLANS FOR ADDITIONAL IMPROVEMENTS.
8. ABRASIVE BLAST AND COAT TO BE IN ACCORDANCE WITH SYSTEM 108 PER SPEC SECTION 09901 PART 2.03J.
9. FULL DROP PIPE CONFIGURATION NOT SHOWN FOR CLARITY.
10. CONTRACTOR TO CONFIRM SIZE AND LOCATION OF THE WET WELL HATCHES PER HATCH AND PUMP MANUFACTURER REQUIREMENTS
11. PUMP AND ANCHOR BOLTS ARE THE BE ADHESIVE TYPE, AND EMBEDDED IN THE CONCRETE SLAB. CONTRACTOR TO SUBMIT DESIGN OF PUMP ANCHOR BOLTS AND PATTERN, INCLUDING CALCULATIONS, DURING SHOP DRAWINGS SUBMISSION.
12. ALL PIPING IN THE WET WELL SHALL BE FLANGED. NO FLANGED COUPLING ADAPTORS, OR VICTAULIC STYLE COUPLINGS SHALL BE PERMITTED INSIDE OF THE WET WELL.
13. ACCESS HATCHES SHALL BE FOREST GREEN. SAFETY GRATING SHALL BE FURNISHED WITH SAFETY ORANGE POWDER COAT FINISH.
14. INSTALL PLUG VALVES TO OPEN UPWARD AND TO CLOSE TO A SEATING POSITION.
15. INSTALL CHECK VALVES SO THAT THE WEIGHT LEVER POSITION IS APPROXIMATELY 45 DEGREES BELOW THE VALVE HORIZONTAL CENTER LINE IN THE CLOSE POSITION AND APPROXIMATELY 45 DEGREES ABOVE THE HORIZONTAL CENTER LINE IN THE FULL OPEN POSITION.
16. PROPOSED FLOAT SWITCH AND LEVEL RADARS SHOWN FOR REFERENCE. REFER TO (LCK–C–08) FOR LOCATION AND SIZE

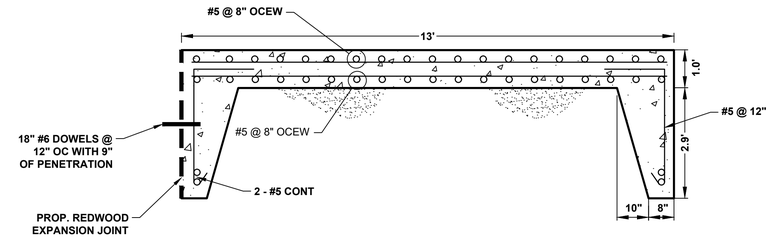

DISCHARGE PIPING CONCRETE SLAB DETAIL

SCALE: 1" = 2'

LEGEND

- # / # — DETAIL NO. / SHEET NO.
- EXIST. CONCRETE
- PROP. CONCRETE
- PROP. FLOWABLE FILL

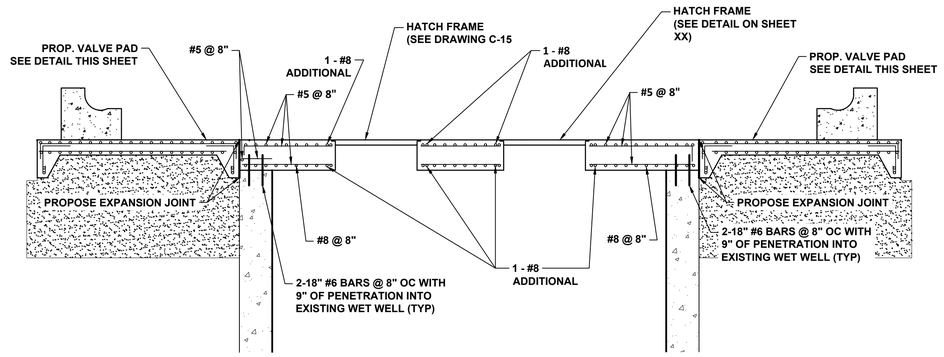

WET WELL TOP SLAB DETAIL

SCALE: 1"=5'

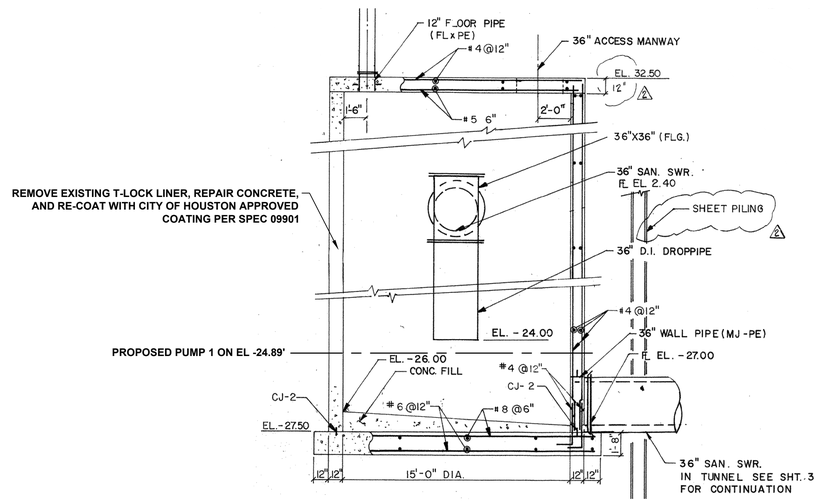

EXISTING MANHOLE (MH# 5805771) - TO BE REHABILITATED

SCALE: 1" = 5'

NO.	DATE	REVISION	APP.

IDS Engineering Group
13430 NW. Freeway, Suite 700
Houston, Tx. 77040
713.462.3178
TxEng Firm 2726 | TxSurv Firm 10110700

SURVEYED BY: KUO & ASSOCIATES, INC.
TBPE FIRM #F-4578; TBPLS FIRM #1007560

THIS DOCUMENT IS RELEASED FOR THE PURPOSE OF REVIEW UNDER THE AUTHORITY OF MARCEL KHOUW, P.E. 101807 ON 12/17/2025. IT IS NOT TO BE USED FOR CONSTRUCTION PURPOSES.

CITY OF HOUSTON
HOUSTON PUBLIC WORKS

LIFT STATION RENEWAL AND REPLACEMENT FY 2023

LOCKWOOD LIFT STATION ELEVATION SECTION

WBS NUMBER	FOR CITY OF HOUSTON USE ONLY
R-000267-0179-4	
DRAWING SCALE	
HORIZ: AS NOTED VERT: N/A	
CITY OF HOUSTON PM	
NAWARAJ PANTA, P.E.	
DWG. NO. LCK–C–09	SHEET NO. 22 OF 321

FILE PATH: \\tdseg.com\FS\Projects\0000\005708500 CoH Lift Stations - FY 2023\CAD\DWG\PRODUCTION\22-LOCKWOOD ELEV SECTION.dwg

PLOTTED: 12/17/2025 7:56 AM

LIFT STATION OVERALL DESIGN POINT
PWWF = 23.1 MGD (16,042 GPM)

LOCKWOOD LIFT STATION REHABILITATION
FLYGT NP 3306/665 3 ~ 870

DESIGN POINT
9625 GPM @ 71.00

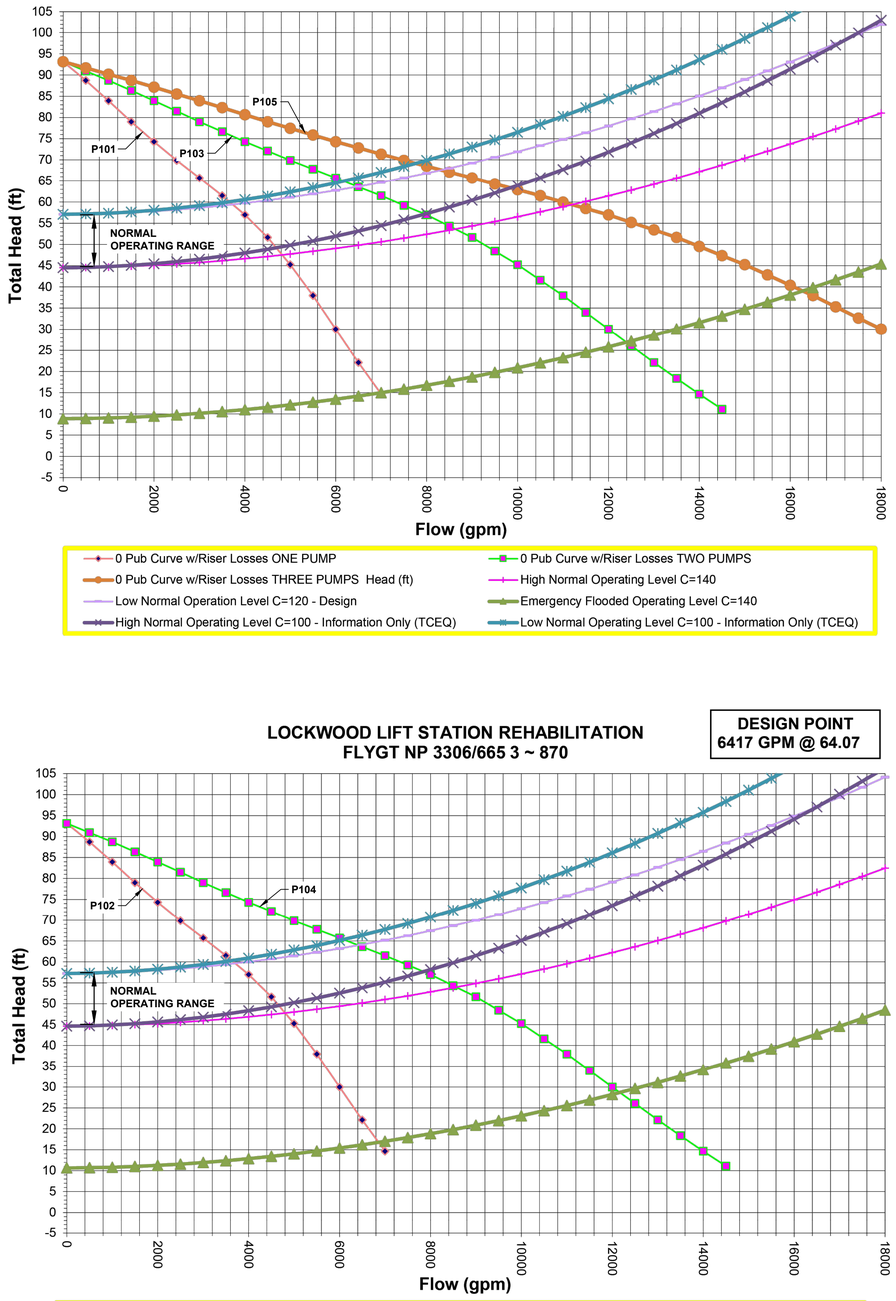

PUMP DATA TABLE*

PUMP CHARACTERISTICS	PUMP NO. 101	PUMP NO. 102	PUMP NO. 103	PUMP NO. 104	PUMP NO. 105	PUMP NO. 106
MOTOR DATA						
NOMIMAL SIZE (HP)	85	85	85	85	85	85
MAX SPEED (RPM)	880	880	880	880	880	880
SOLIDS PASSAGE						
MINIMUM SPHERE (IN)	3	3	3	3	3	3
CAPACITY (GPM)						
DESIGN	3180	3180	3180	3180	3180	3180
RUNOUT	7690	7690	7690	7690	7690	7690
Actual Cumulative Flow	3,734	6,508	8,500	12,234	15,008	
DISCHARGE HEAD (FT)						
DESIGN	66.80	66.80	66.80	66.80	66.80	66.80
RUNOUT	19	19	19	19	19	19
SHUT OFF	93.1	93.1	93.1	93.1	93.1	93.1
EFFICIENCY (%)						
DESIGN	80.9	80.9	80.9	80.9	80.9	80.9
NPSHR (FT)						
DESIGN	8.9	8.9	8.9	8.9	8.9	8.9

*Flygt NP 3306/665 3 ~870 used for all pump calculations.

NOTES:

1. PUMP ROTATION SHALL BE AS FOLLOWS: P106(STANDBY)–>P101, P105–>P102, P104–>P103, P103–>P104, P102–>P105, P101–>P106(STANDBY).

STATION OPERATING TABLES

PROPOSED CONDITION - 23.1 MGD

RISING WATER LEVEL

WATER LEVEL ELEVATION	ACTION	PUMP(S) IN OPERATION
-27.79	PUMPS OFF LEVEL - NO ACTION	ALL PUMPS ARE OFF
-24.89	PUMP 101 TURNS ON	PUMP 101 ON
-21.99	PUMP 102 TURNS ON	PUMP 101 AND 102 ON
-19.82	PUMP 103 TURNS ON	PUMP 101, 102, AND 103 ON
-17.65	PUMP 104 TURNS ON	PUMP 101, 102, 103, AND 104 ON
-16.20	PUMP 105 TURNS ON	PUMP 101, 102, 103, 104, AND 105 ON
-15.70	STANDBY PUMP TURNS ON	ALL PUMPS ON
-15.20	HIGH WATER ALARM ON	HIGH WATER ALARM SOUND

FALLING WATER LEVEL

WATER LEVEL ELEVATION	ACTION	PUMP(S) IN OPERATION
-15.20	HIGH WATER ALARM ON	HIGH WATER ALARM SOUND
-15.70	HIGH WATER ALARM OFF	ALL PUMPS ON
-16.20	STANDBY PUMP TURNS OFF	PUMP 101, 102, 103, 104, AND 105 ON
-17.65	PUMP 105 TURNS OFF	PUMP 101, 102, 103, AND 104 ON
-19.82	PUMP 104 TURNS OFF	PUMP 101, 102, AND 103 ON
-21.99	PUMP 103 TURNS OFF	PUMP 101 AND 102 ON
-24.89	PUMP 102 TURNS OFF	PUMP 101 ON
-27.79	PUMP 101 TURNS OFF	ALL PUMPS OFF - SEE NOTE 1

LOCKWOOD LIFT STATION REHABILITATION
FLYGT NP 3306/665 3 ~ 870

DESIGN POINT
6417 GPM @ 64.07

NO.	DATE	REVISION	APP.

IDS Engineering Group
13430 NW. Freeway, Suite 700
Houston, Tx. 77040
713.462.3178
TxEng Firm 2726 | TxSurv Firm 10110700

SURVEYED BY: KUO & ASSOCIATES, INC.
TBPE FIRM #F-4578; TBPLS FIRM #1007560

THIS DOCUMENT IS RELEASED FOR THE PURPOSE OF REVIEW UNDER THE AUTHORITY OF MARCEL KHOUW, P.E. 101807 ON 12/17/2025. IT IS NOT TO BE USED FOR CONSTRUCTION PURPOSES.

CITY OF HOUSTON
HOUSTON PUBLIC WORKS

LIFT STATION RENEWAL AND REPLACEMENT FY 2023

MECHANICAL LS PUMP CURVE DATA TABLES (LOCKWOOD)

WBS NUMBER	FOR CITY OF HOUSTON USE ONLY
R-000267-0179-4	
DRAWING SCALE	
HORIZ: N/A VERT: N/A	
CITY OF HOUSTON PM	
NAWARAJ PANTA, P.E.	

DWG. NO. LCK-C-10

SHEET NO. 23 OF 321

FILE PATH: \\idseg.com\FS\Projects\0000\005708500 CoH Lift Stations - FY 2023\CAD\DWG\PRODUCTION\23-LOCKWOOD CURVE DATA.dwg

PLOTTED: 12/17/2025 7:56 AM

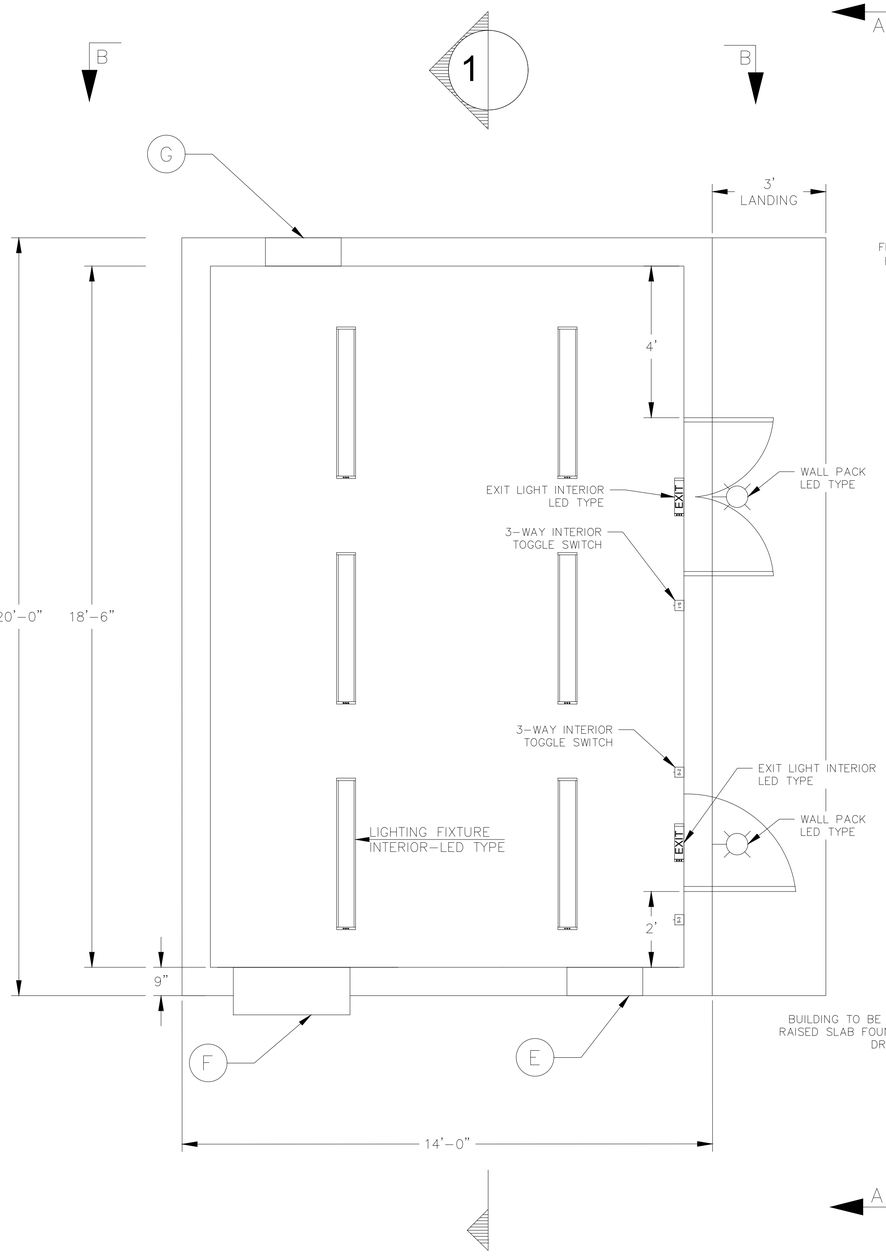

FLOOR PLAN

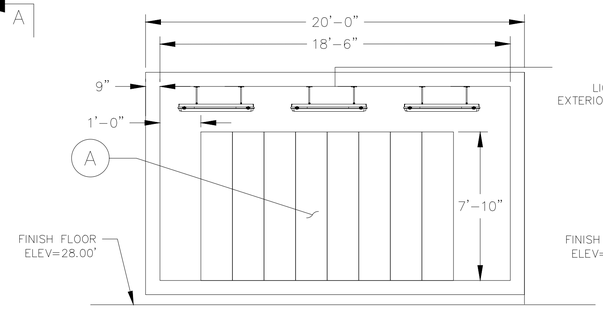

TYPICAL SECTION-1
SCALE: NTS

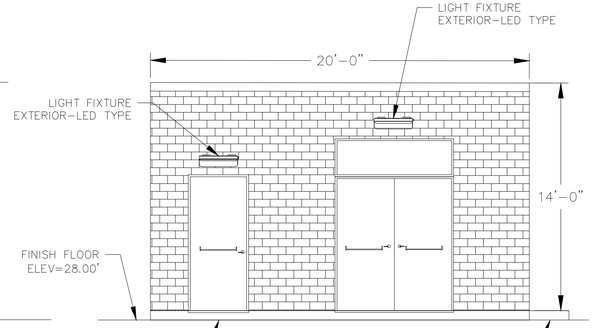

SIDE ELEVATION A
SCALE: NTS

EQUIPMENT PAD DETAIL
SCALE: NTS

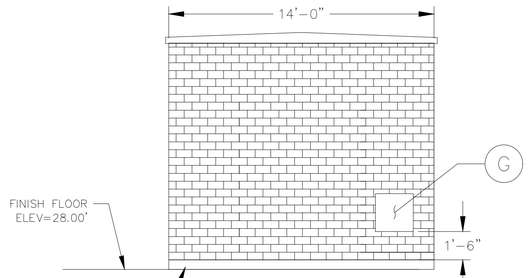

BACK ELEVATION B
SCALE: N.T.S.

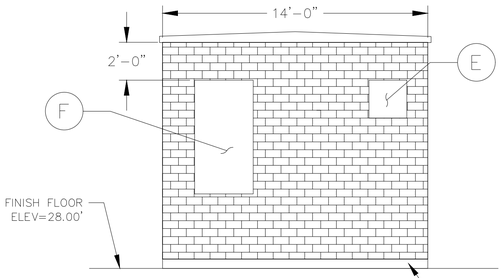

FRONT ELEVATION C
SCALE: N.T.S.

NOTES:

1. THE BUILDING IS GENERAL PURPOSE, NON-CLASSIFIED, NON-BLAST RATED.
2. ELECTRICAL CONDUITS INTO CONTROL BUILDING SHALL BE LOCATED AND POSITIONED PRIOR TO POURING BUILDING FOUNDATION OR IF PRECAST.
3. THE HVAC UNITS SHALL BE SIZED BASED ON HEAT LOSS CALCULATIONS. COORDINATE AC/HEAT PUMP OPENING SIZE WITH SELECTED MANUFACTURE'S RECOMMENDATIONS.
4. BUILDING DOOR SHALL BE OF 316 STAINLESS STEEL TYPE.
5. THE SINGLE ENTRANCE DOORS SHALL BE 36" (WIDE) X 84" (HEIGHT).
6. THE DOUBLE ENTRANCE DOORS SHALL BE 72" (WIDE), 84" (HEIGHT), WITH 24" HIGH.
7. OPENINGS FOR BELTLESS FAN (24"X24") ON TOP OF WALL ELEVATION WITH 24"X24" LOUVER ON THE BOTTOM. BOTH UNITS SHALL BE PROVIDED WITH REMOVABLE COVERS FOR STANDBY USE.
8. FOR LIGHTING PLAN SEE SHEET ZOE05.

EQUIPMENT IDENTIFICATION LIST

ITEM	TAG NO.	DESCRIPTION
A		480V MCC
B		480 V - 240 / 120 V SINGLE PHASE POWER PANEL BOARD
C		480 V - 240 / 120 V SINGLE PHASE LIGHTING TRANSFORMER
D		CONTROL PANEL
E		EXHAUST FAN
F		WALL MOUNTED HVAC UNIT/ W SS BURGLAR BARS (NOTE J)
G		LOUVER

NO.	DATE	REVISION	APP.

IDS Engineering Group
13430 NW. Freeway, Suite 700
Houston, Tx. 77040
713.462.3178
TxEng Firm 2726 | TxSurv Firm 10110700

SURVEYED BY: KUO & ASSOCIATES, INC.
TBPE FIRM #F-4578; TBPLS FIRM #1007560

THIS DOCUMENT IS RELEASED FOR THE PURPOSE OF REVIEW UNDER THE AUTHORITY OF MARCEL KHOUW, P.E. 101807 ON 12/17/2025. IT IS NOT TO BE USED FOR CONSTRUCTION PURPOSES.

CITY OF HOUSTON
HOUSTON PUBLIC WORKS

LIFT STATION RENEWAL AND REPLACEMENT FY 2023

ARCHITECTURAL PRECAST CONCRETE CONTROL BUILDING 4

WBS NUMBER	FOR CITY OF HOUSTON USE ONLY
R-000267-0179-4	
DRAWING SCALE	
HORIZ: N.T.S. VERT: N/A	
CITY OF HOUSTON PM	
NAWARAJ PANTA, P.E.	
DWG. NO. LCK-A-01	SHEET NO. 24 OF 321

FILE PATH: \\dseg.com\FS\Projects\0000\005708500 CoH Lift Stations - FY 2023\CAD\DWG\PRODUCTION\24-LOCKWOOD PROP BLDG.dwg

PLOTTED: 12/17/2025 7:56 AM

FILE PATH: \\idseg.com\FS\Projects\0000\005708500 CoH Lift Stations - FY 2023\CAD\DWG\PRODUCTION\25-LOCKWOOD PLATFORM.dwg

NO.	DATE	REVISION	APP.

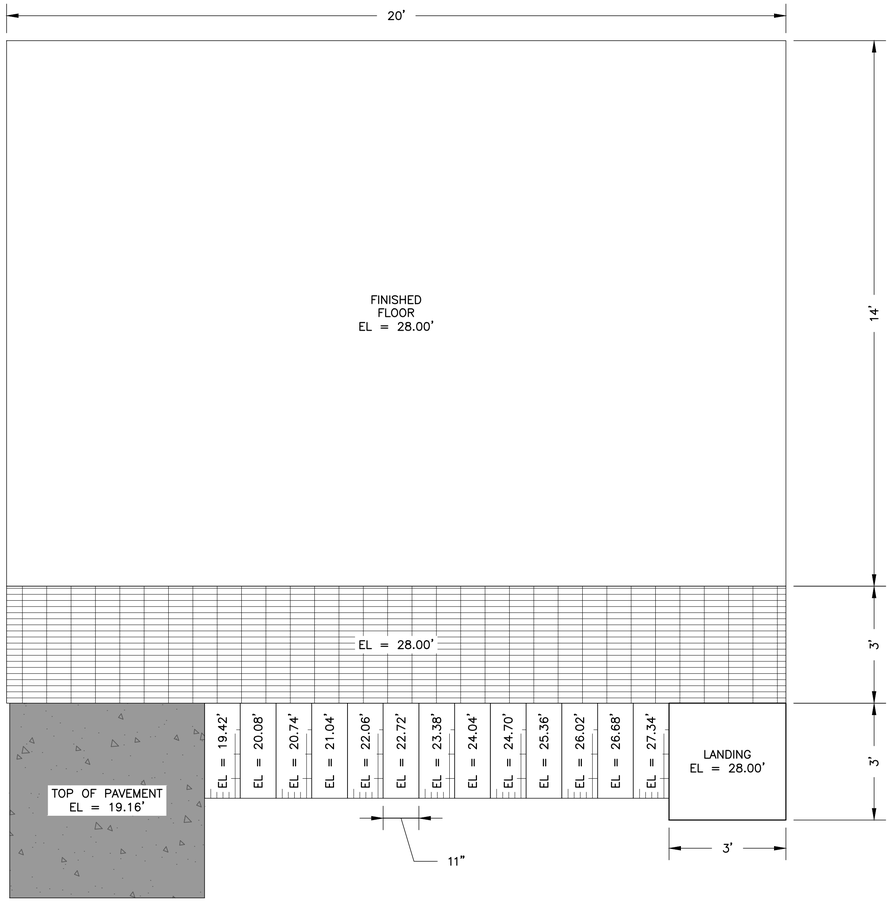

1 PLAN VIEW
N.T.S.

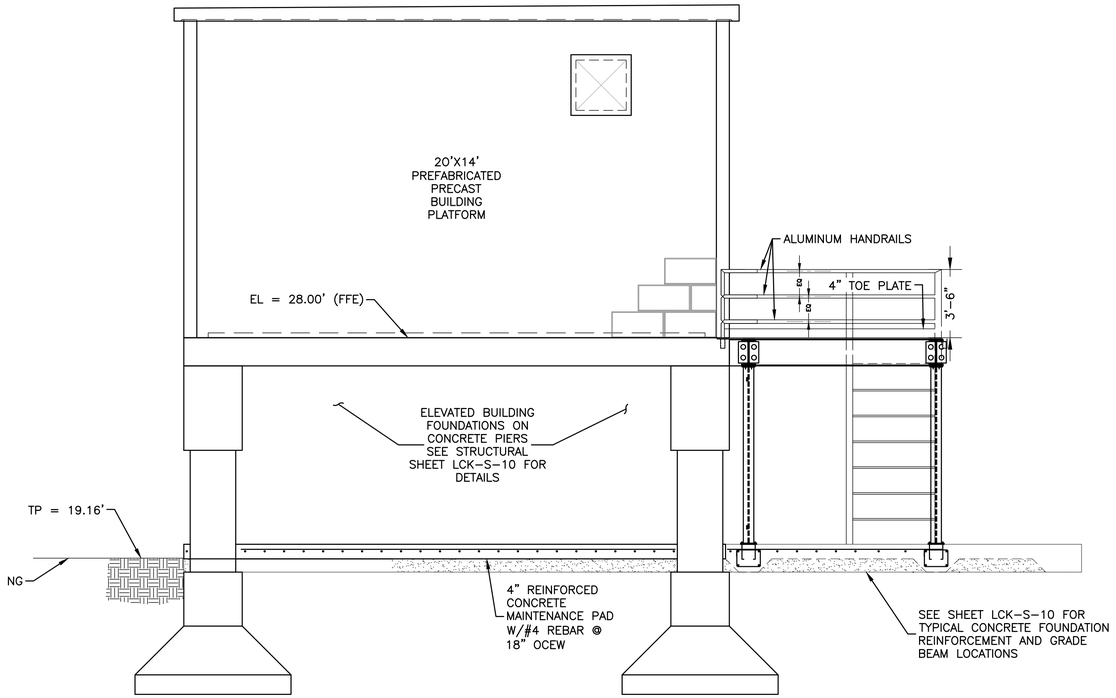

2 ELEVATION VIEW
N.T.S.

NOTES:

1. CONTRACTOR SHALL SUBMIT DRAWINGS OF THE PLATFORM AND BUILDING, MEETING THE 2021 INTERNATIONAL BUILDING CODE (AS AMENDED BY THE CITY OF HOUSTON), AND SIGNED AND SEALED BY AN ENGINEER REGISTERED OR LICENSED IN THE STATE OF TEXAS.
2. PLATFORM AND BUILDING SHOWN IS A REPRESENTATION OF FINAL PLATFORM. FINAL STRUCTURAL DESIGN MAY VARY BASED ON SIGNED, SEALED, AND APPROVED DEFERRED SUBMITTALS.
3. PLATFORM AND BUILDING SHOULD BE DESIGNED TO WITHSTAND LOADS FROM A 500-YEAR EVENT, BASED ON THE FEMA WSEL FOR A 500-YR FLOOD EVENT.
4. PLATFORM GRATING WILL BE ALUMINUM POWDER COATED.
5. PLATFORM AND BUILDING SHALL BE DESIGNED TO MEET THE ULTIMATE DESIGN WIND SPEED (VULT) OF 142 MPH IN 3 SECOND GUSTS AS REQUIRED FOR RISK CATEGORY III STRUCTURES PER SECTION 1609.3 AND TABLE 1609.3.1 OF THE 2021 IBC WITH CITY OF HOUSTON AMENDMENTS.
6. ADDITIONAL DETAILS CAN BE FOUND ON SUBSEQUENT SHEETS.
7. APPROVED FABRICATORS – THE PLATFORM(S), STAIRS, BUILDING(S), AND ALL APPURTENANCES REQUIRE A CITY OF HOUSTON APPROVED FABRICATOR. A LIST OF APPROVED FABRICATORS CAN BE DOWNLOADED AT HTTPS://WWW.HOUSTONPERMITTINGCENTER.ORG/MEDIA/2146/DOWNLOAD. FOR INFORMATION ABOUT THE APPROVED FABRICATORS PROGRAM, PLEASE CONTACT 832-394-9043 OR MAHER.KHANSA@HOUSTONTX.GOV.

IDS Engineering Group
13430 NW. Freeway, Suite 700
Houston, Tx. 77040
713.462.3178
TxEng Firm 2726 | TxSurv Firm 10110700

SURVEYED BY: KUO & ASSOCIATES, INC.
TBPE FIRM #F-4578; TBPLS FIRM #1007560

THIS DOCUMENT IS RELEASED FOR THE PURPOSE OF REVIEW UNDER THE AUTHORITY OF MARCEL KHOUW, P.E. 101807 ON 12/17/2025. IT IS NOT TO BE USED FOR CONSTRUCTION PURPOSES.

CITY OF HOUSTON
HOUSTON PUBLIC WORKS

LIFT STATION RENEWAL AND REPLACEMENT FY 2023

LOCKWOOD LIFT STATION WALKING PLATFORM LAYOUT

WBS NUMBER	FOR CITY OF HOUSTON USE ONLY
R-000267-0179-4	
DRAWING SCALE	
HORIZ: N.T.S. VERT: N/A	
CITY OF HOUSTON PM	
NAWARAJ PANTA, P.E.	
DWG. NO. LCK-A-02	SHEET NO. 25 OF 321

PLOTTED: 12/17/2025 7:56 AM

FILE PATH: \\idseg.com\FS\Projects\0000\005708500 CoH Lift Stations - FY 2023\CAD\DWG\PRODUCTION\26-LOCKWOOD ELEVATED PLATFORM.dwg

NO.	DATE	REVISION	APP.

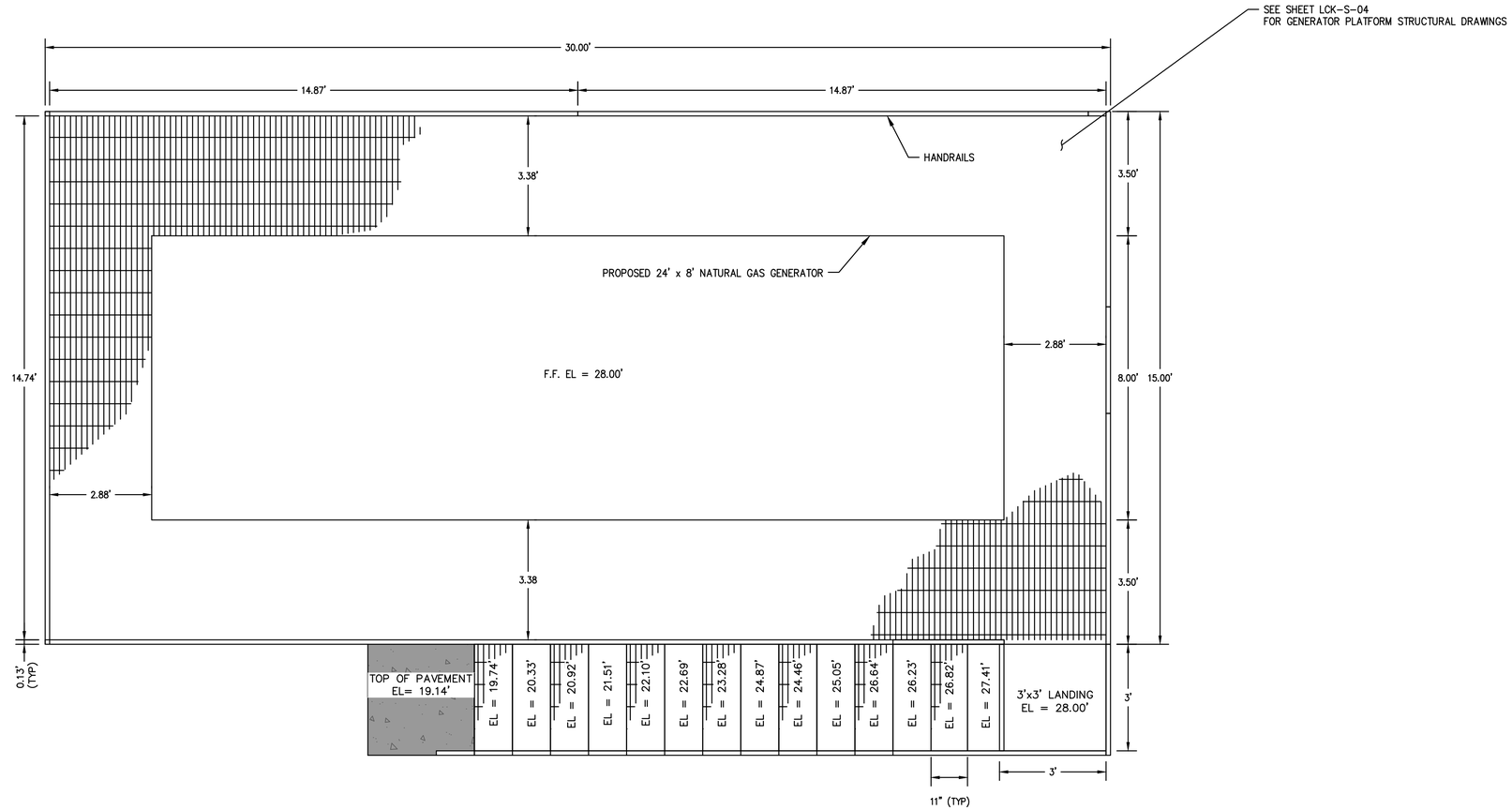

NOTES:

1. CONTRACTOR SHALL SUBMIT SIGNED AND SEALED FABRICATION DRAWINGS BY A PROFESSIONAL ENGINEER OF PLATFORM MEETING THE 2012 INTERNATIONAL BUILDING CODE (AS AMENDED BY THE CITY OF HOUSTON).
2. PLATFORM SHOULD BE DESIGNED TO WITHSTAND LOADS FROM A 500-YEAR EVENT, BASED ON THE FEMA WSEL FOR A 500-YR FLOOD EVENT.
3. PLATFORM GRATING WILL BE ALUMINUM POWDER COATED FOREST GREEN.
4. PLATFORM SHALL BE DESIGNED TO MEET THE ULTIMATE DESIGN WIND SPEED (VULT) OF 139 MPH IN 3 SECOND GUSTS AS REQUIRED FOR RISK CATEGORY II STRUCTURES PER SECTION 1609.3 AND TABLE 1609.3.1 OF THE 2012 IBC WITH CITY OF HOUSTON AMENDMENTS.

IDS Engineering Group
13430 NW. Freeway, Suite 700
Houston, Tx. 77040
713.462.3178
TxEng Firm 2726 | TxSurv Firm 10110700

SURVEYED BY: KUO & ASSOCIATES, INC.
TBPE FIRM #F-4578; TBPLS FIRM #1007560

THIS DOCUMENT IS RELEASED FOR THE PURPOSE OF REVIEW UNDER THE AUTHORITY OF MARCEL KHOUW, P.E. 101807 ON 12/17/2025. IT IS NOT TO BE USED FOR CONSTRUCTION PURPOSES.

CITY OF HOUSTON
HOUSTON PUBLIC WORKS

LIFT STATION RENEWAL AND REPLACEMENT FY 2023

LOCKWOOD LIFT STATION ELEVATED GENERATOR PLATFORM

WBS NUMBER	FOR CITY OF HOUSTON USE ONLY
R-000267-0179-4	
DRAWING SCALE	
HORIZ: 1" = 2' VERT: N/A	
CITY OF HOUSTON PM	
NAWARAJ PANTA, P.E.	

DWG. NO.	SHEET NO.
LCK-A-03	26 OF 321

PLOTTED: 12/17/2025 7:56 AM

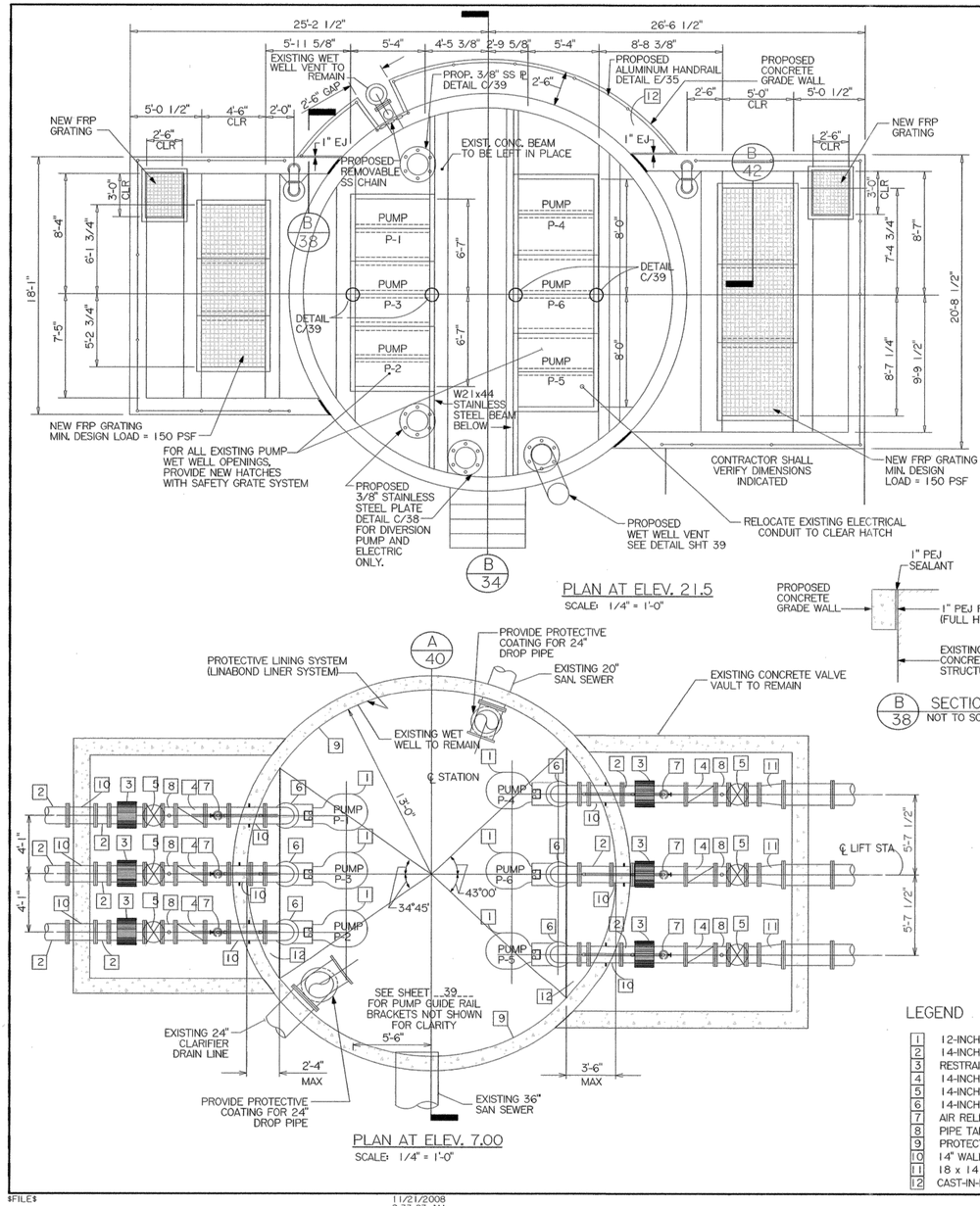

PLAN AT ELEV. 21.5
SCALE: 1/4" = 1'-0"

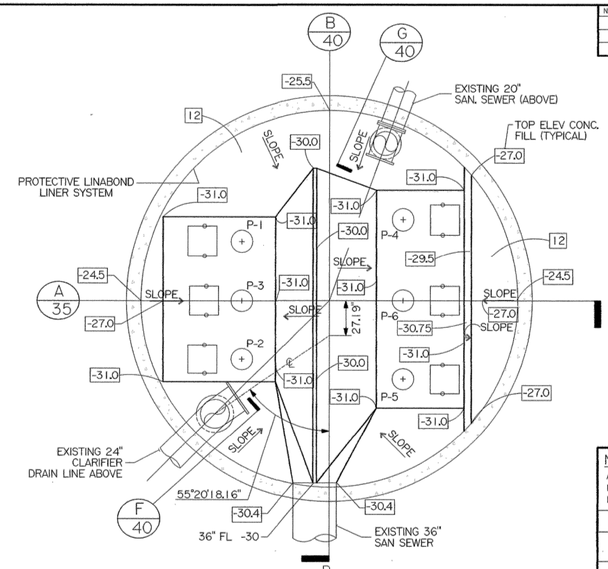

PLAN AT BASE OF WET WELL (ELEV-32.5)
SCALE: 1/4" = 1'-0"

PLAN AT ELEV. 7.00
SCALE: 1/4" = 1'-0"

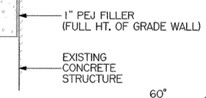

B 38 SECTION NOT TO SCALE

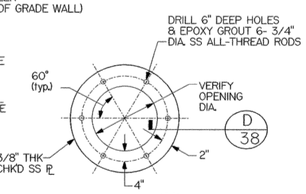

DETAIL C 38 NOT TO SCALE

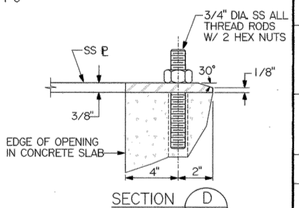

SECTION D 38 NOT TO SCALE

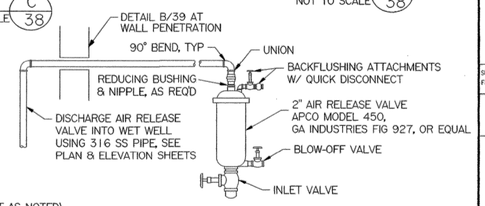

TYPICAL AIR RELEASE VALVE ASSY

DETAIL A 38 NOT TO SCALE

LEGEND (ALL NEW ITEMS EXCEPT AS NOTED)

1	12-INCH SUBMERSIBLE PUMPS
2	14-INCH FLANGED DISCHARGE PIPE
3	RESTRAINED FLANGED COUPLING ADAPTOR
4	14-INCH CHECK VALVE
5	14-INCH PLUG VALVE
6	14-INCH SR DI FLANGED 90° BEND
7	AIR RELEASE VALVE ASSEMBLY
8	PIPE TAP FOR PRESSURE GAGE
9	PROTECTIVE LINING (CONCRETE)
10	14" WALL PIPE
11	18 x 14 DI CONCENTRIC FLANGED REDUCER
12	CAST-IN-PLACE CONCRETE

No.	Date	Revisions	App.

AS BUILT

NOTICE:
AT LEAST 48 HOURS BEFORE EXCAVATING IN STREET R.O.W. OR EASEMENTS CALL THE LONE STAR NOTIFICATION (713)223-4567

PRIVATE UTILITY LINES SHOWN

N/A DATE

CENTERPOINT ENERGY/ELECTRIC FACILITES (APPROVED ONLY FOR CROSSING UNDERGROUND DUCTLINES, UNLESS OTHERWISE NOTED) VALID AT TIME OF REVIEW ONLY.

DATE

SBC APPROVED FOR UNDERGROUND CONDUIT FACILITIES ONLY SIGNATURE VALID FOR ONE YEAR

N/A DATE

CENTERPOINT ENERGY/GAS FACILITIES (GAS SERVICE LINES ARE NOT SHOWN)

DATE

CABLE

DEMPKLES & TERGESON ASSOCIATES, INC.
CONSULTING ENGINEERS
2100 North Loop West, Suite 305
Houston, Texas 77018-8013
Phone (713) 783-7717
Fax (713) 783-5431

SURVEYED BY: AMANI Engineering, Inc.
FB NO. P-5448

STATE OF TEXAS
CHRIS DEMPKLES
9163
REGISTERED
11/21/2008

CITY OF HOUSTON
DEPARTMENT OF PUBLIC WORKS AND ENGINEERING

LOCKWOOD LIFT STATION REHABILITATION

LIFT STATION PLANS

WBS NO.	
R-000267-00B3-4	
DRAWING SCALE	
AS NOTED	
CITY OF HOUSTON S.E.	
IRAJ RANJBAR, P.E.	
SHEET NO. 38 OF 76	

PUBLIC WORKS AND ENGINEERING
ACCEPTED FOR FILING
45601
CITY REGISTRATION NUMBER
HOUSTON, TEXAS

IDS Engineering Group
13430 NW. Freeway, Suite 700
Houston, Tx. 77040
713.462.3178
TxEng Firm 2726 | TxSurv Firm 10110700

SURVEYED BY: KUO & ASSOCIATES, INC.
TBPE FIRM #F-4578; TBPLS FIRM #1007560

THIS DOCUMENT IS RELEASED FOR THE PURPOSE OF REVIEW UNDER THE AUTHORITY OF MARCEL KHOUW, P.E. 101807 ON 12/17/2025. IT IS NOT TO BE USED FOR CONSTRUCTION PURPOSES.

CITY OF HOUSTON
HOUSTON PUBLIC WORKS

LIFT STATION RENEWAL AND REPLACEMENT FY 2023

EXISTING LIFT STATION RECORD DRAWING (SHEET 1 OF 2)

WBS NUMBER	FOR CITY OF HOUSTON USE ONLY
R-000267-0179-4	
DRAWING SCALE	
HORIZ: N/A VERT: N/A	
CITY OF HOUSTON PM	
NAWARAJ PANTA, P.E.	
SHEET NO. 27 OF 321	

DWG. NO. LCK-C-11

FOR REFERENCE ONLY

NO.	DATE	REVISION	APP.

FILE PATH: \\idseg.com\FS\Projects\0000\005708500 CoH Lift Stations - FY 2023\CAD\DWG\PRODUCTION\27-LOCKWOOD RECORD DWG.dwg

$FILE$ 11/21/2008 8:33:03 AM

PLOTTED: 12/17/2025 7:56 AM

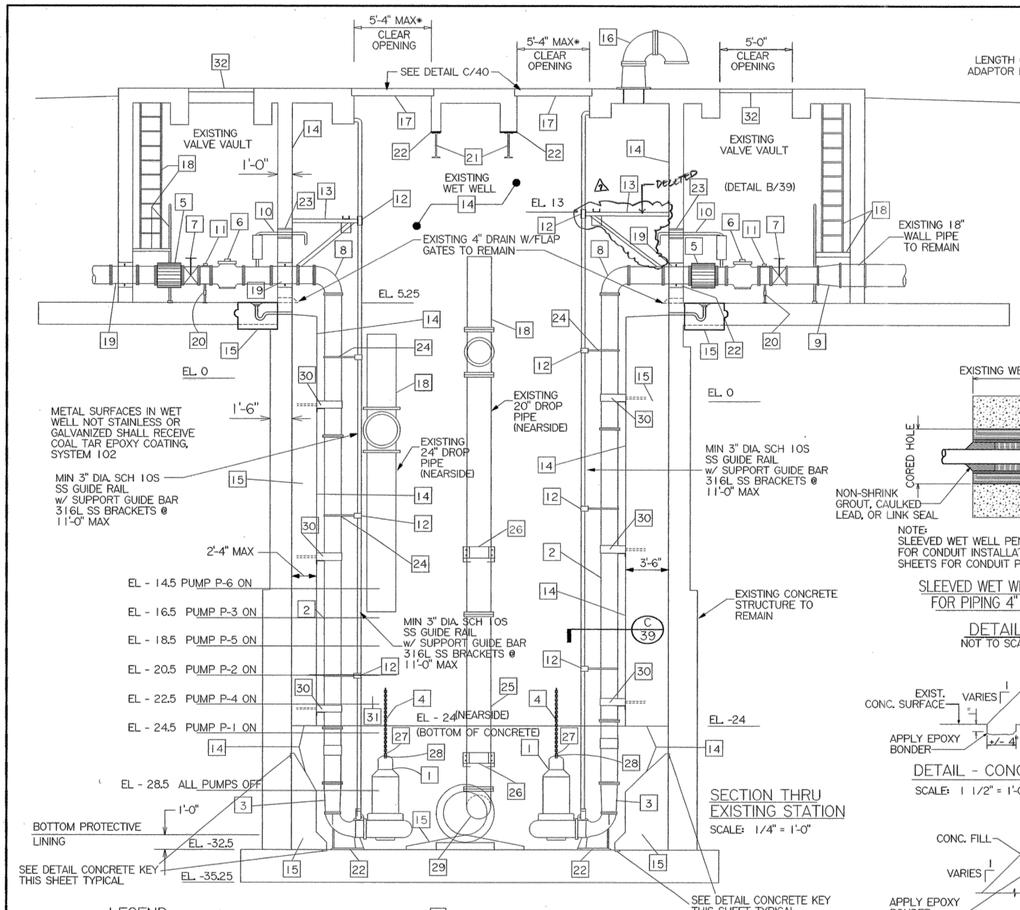

LENGTH OF FLANGED COUPLING ADAPTOR IS DEPENDENT ON SIZE AND MANUFACTURER

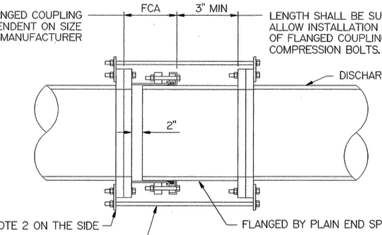

TYPICAL FLANGED COUPLING ADAPTOR RESTRAINT DETAIL

DETAIL A / 39 — NOT TO SCALE

FLANGED COUPLING ADAPTOR NOTES:

1. PROVIDE A NUMBER OF TIE RODS EQUAL TO 1/2 THE NUMBER OF FLANGE BOLTS. EVENLY SPACE INSTALLATION OF TIE RODS. DIAMETER OF TIE RODS TO BE EQUAL TO THE DIAMETER OF FLANGE BOLTS. LENGTH OF TIE RODS TO BE DETERMINED BY CONTRACTOR BASED ON SIZE AND MANUFACTURER OF FLANGED COUPLING ADAPTOR AND FINAL LENGTH OF SPOOL PIECE.
2. PROVIDE 316 SS TAB FOR ATTACHMENT OF TIE RODS. SIZE TO BE DETERMINED BY CONTRACTOR.
3. CONTRACTOR TO SUBMIT DETAILS DURING SHOP DRAWING SUBMISSION.
4. ALL HARDWARE SHALL BE 316 STAINLESS STEEL. TIE RODS SHALL BE THREADED.
5. THIS RESTRAINT DOES NOT REPLACE THRUST BLOCKS TO BE PROVIDED AT OTHER LOCATIONS.

NOTE:
SLEEVED WET WELL PENETRATION IS NOT TO BE USED FOR CONDUIT INSTALLATION. SEE ELECTRICAL DETAIL SHEETS FOR CONDUIT PENETRATIONS.

SLEEVED WET WELL PENETRATION FOR PIPING 4" DIA & SMALLER

DETAIL B / 39 — NOT TO SCALE

DETAIL - CONCRETE KEY AT SLAB

SCALE: 1 1/2" = 1'-0"

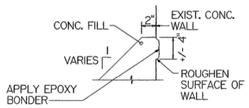

DETAIL - CONCRETE KEY AT WALL

SCALE: 1 1/2" = 1'-0"

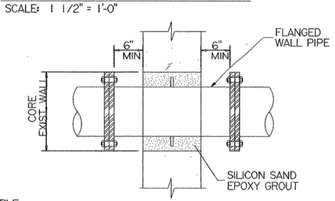

DETAIL - WET WELL WALL PENETRATION

FOR PIPING GREATER THAN 4" DIAMETER

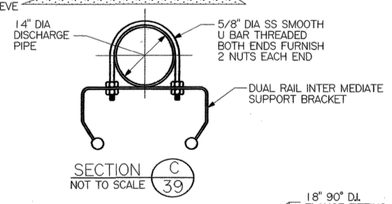

SECTION C / 39 — NOT TO SCALE

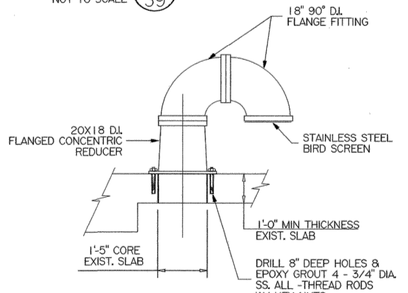

SECTION

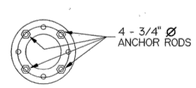

PLAN AT BASE

DETAIL WET WELL VENT

SCALE: 1/2" = 1'-0"

LEGEND (ALL NEW ITEMS EXCEPT AS NOTED)

1	12-INCH SUBMERSIBLE PUMPS (6 REQUIRED)
2	14-INCH DJ FLANGED DISCHARGE PIPE
3	14 x 12 DJ ECC FLANGED REDUCER
4	1/2" DIA. MIN 316 STAINLESS STEEL LIFTING CHAIN *
5	RESTRAINED FLANGED COUPLING ADAPTOR
6	14-INCH CHECK VALVE
7	14-INCH PLUG VALVE
8	14-INCH SR DI FLANGED 90° BEND
9	18 x 14 DJ CONC FLANGED REDUCER
10	AIR RELEASE VALVE ASSEMBLY
11	PIPE TAP FOR PRESSURE GAGE
12	PUMP GUIDE RAIL BRACKET
13	DISCHARGE PIPING SUPPORT BRACKET
14	PROTECTIVE LINING SYSTEM (CONCRETE) (LINABOND LINER SYSTEM)
15	CAST-IN-PLACE CONCRETE
16	18-INCH WET WELL VENT ASSEMBLY
17	HATCHES WITH SAFETY GRATING SYSTEM
18	PROTECTIVE COATING (METAL)
19	14-INCH WALL CASTING
20	ADJUSTABLE PIPE SUPPORT
21	W21 x 44 STAINLESS STEEL BEAM — DELETED
22	EPOXY GROUT
23	SLEEVED WET WELL PENETRATION
24	5/8" DIA SS U-BOLT, THREADED BOTH ENDS
25	EXTEND EXISTING 20" DROP PIPE
26	DROP PIPE CLAMP ASSEMBLY
27	1/2" MIN. 316 SS FORGED HAMMERLOCK *
28	1/2" MIN. 316 SS BOLT CHAIN SHACKLE *
29	20-INCH SR DI FLANGED 45° BEND
30	PIPE CLAMP ASSEMBLY
31	CONCRETE BAFFLE
32	FRP GRATING

* VERIFY CHAIN, HAMMERLOCK, AND SHACKLE SIZE WITH PUMP MANUFACTURER AND FINISH PROOF LOAD TO ENGINEER

NOTE:
SEE ELECTRICAL DRAWING E15 FOR SUBMERSIBLE TRANSDUCER DETAIL AND TRANSMITTER GUIDE BRACKET DETAIL.

NOTE:
INTERNAL LINING FOR STEEL OR DUCTILE IRON FORCE MAIN AND STATION DISCHARGE PIPING SHALL BE PROTECTO 401 CERAMIC LINING BY INDURON, OR EQUAL, TO NOMINAL THICKNESS OF 40 MILS.

No.	Date	Revisions	App.
7	9.17.14	DELETED W21 x 44 STAINLESS STEEL BEAM	

AS BUILT

NOTICE:
AT LEAST 48 HOURS BEFORE EXCAVATING IN STREET R.O.W. OR EASEMENTS CALL THE LONE STAR NOTIFICATION (713)223-4567

PRIVATE UTILITY LINES SHOWN

N/A DATE

CENTERPOINT ENERGY/ELECTRIC FACILITES (APPROVED ONLY FOR CROSSING UNDERGROUND DUCTLINES, UNLESS OTHERWISE NOTED) VALID AT TIME OF REVIEW ONLY.

DATE

SBC APPROVED FOR UNDERGROUND CONDUIT FACILITIES ONLY SIGNATURE VALID FOR ONE YEAR

N/A DATE

CENTERPOINT ENERGY/GAS FACILITIES (GAS SERVICE LINES ARE NOT SHOWN)

DATE

CABLE

DEMOPULOS & FERGUSON ASSOCIATES, INC. CONSULTING ENGINEERS
2180 North Loop West, Suite 305 Houston, Texas 77018-8013 Phone (713) 783-7717 Fax (713) 783-5431

SURVEYED BY: AMANI Engineering, Inc. FB NO. P-5448

CHRIS DEMOPULOS 9163 REGISTERED PROFESSIONAL ENGINEER 11/21/2008

CITY OF HOUSTON
DEPARTMENT OF PUBLIC WORKS AND ENGINEERING

LOCKWOOD LIFT STATION REHABILITATION

LIFT STATION SECTION AND DETAILS

WBS NO.	R-000267-00B3-4
DRAWING SCALE	AS NOTED
CITY OF HOUSTON S.E.	IRAJ RANJBAR, P.E.
SHEET NO.	39 OF 76

PUBLIC WORKS AND ENGINEERING ACCEPTED 45601 REGISTERED ENGINEER HOUSTON, TEXAS

IDS Engineering Group
13430 NW. Freeway, Suite 700
Houston, Tx. 77040
713.462.3178
TxEng Firm 2726 | TxSurv Firm 10110700

SURVEYED BY: KUO & ASSOCIATES, INC.
TBPE FIRM #F-4578; TBPLS FIRM #1007560

THIS DOCUMENT IS RELEASED FOR THE PURPOSE OF REVIEW UNDER THE AUTHORITY OF MARCEL KHOUW, P.E. 101807 ON 12/17/2025. IT IS NOT TO BE USED FOR CONSTRUCTION PURPOSES.

CITY OF HOUSTON
HOUSTON PUBLIC WORKS

LIFT STATION RENEWAL AND REPLACEMENT FY 2023

EXISTING LIFT STATION RECORD DRAWING (SHEET 2 OF 2)

WBS NUMBER	R-000267-0179-4
DRAWING SCALE	HORIZ: N/A VERT: N/A
CITY OF HOUSTON PM	NAWARAJ PANTA, P.E.
DWG. NO.	LCK-C-12
SHEET NO.	28 OF 321

FOR CITY OF HOUSTON USE ONLY

FOR REFERENCE ONLY

NO.	DATE	REVISION	APP.

FILE PATH: \\idseg.com\FS\Projects\0000\005708500 CoH Lift Stations - FY 2023\CAD\DWG\PRODUCTION\28-LOCKWOOD RECORD DWG.dwg

PLATFORM INTENT

EXPLODED 3D MODEL OF STRUCTURE
IS ONLY FOR VISUAL REFERENCE, AND
SHALL NOT BE USED TO GATHER
STRUCTURAL INFORMATION

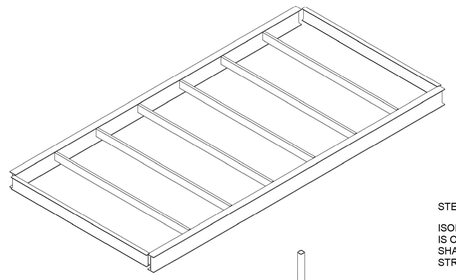

STEEL FRAMING SYSTEM

ISOMETRIC 3D MODEL OF STRUCTURE
IS ONLY FOR VISUAL REFERENCE, AND
SHALL NOT BE USED TO GATHER
STRUCTURAL INFORMATION

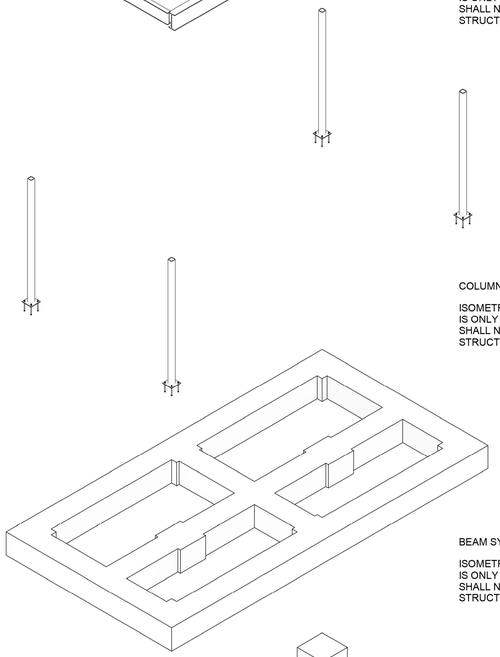

COLUMN SYSTEM

ISOMETRIC 3D MODEL OF STRUCTURE
IS ONLY FOR VISUAL REFERENCE, AND
SHALL NOT BE USED TO GATHER
STRUCTURAL INFORMATION

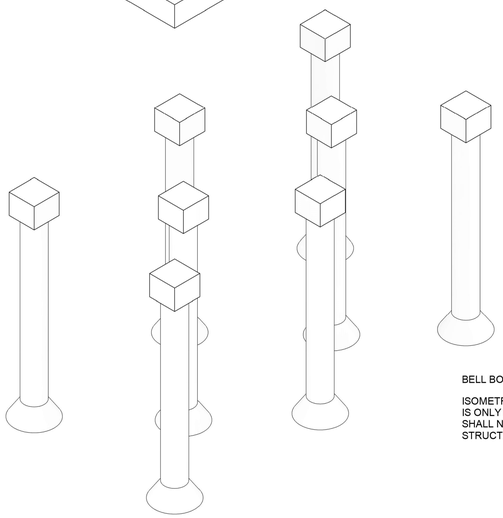

BEAM SYSTEM

ISOMETRIC 3D MODEL OF STRUCTURE
IS ONLY FOR VISUAL REFERENCE, AND
SHALL NOT BE USED TO GATHER
STRUCTURAL INFORMATION

BELL BOTTOM PIER AND PEDESTAL SYSTEM

ISOMETRIC 3D MODEL OF STRUCTURE
IS ONLY FOR VISUAL REFERENCE, AND
SHALL NOT BE USED TO GATHER
STRUCTURAL INFORMATION



NATURAL GAS PLATFORM

ISOMETRIC 3D MODEL OF STRUCTURE
IS ONLY FOR VISUAL REFERENCE, AND
SHALL NOT BE USED TO GATHER
STRUCTURAL INFORMATION

NO.	DATE	REVISION	APP.

P.E. SEAL
REQUIRED

PRELIMINARY

SUBJECT TO REVISION

This document is released for informational purposes under the authority of DAVID MOORE P.E. 139405 on 12/11/2025
It is not to be used for regulatory approval, permit, bidding, or construction purposes.

CONCEPT ENGINEERS
TX. FIRM REGISTRATION # F-04417
Structures for the whole community

IDS Engineering Group
13430 NW. Freeway
Suite 700
Houston, Tx. 77040
713.462.3178
TxEng Firm 2726
TxSurv Firm 10110700

CITY OF HOUSTON
HOUSTON PUBLIC WORKS

LIFT STATION RENEWAL
AND REPLACEMENT FY 2023

COVER SHEET – 3D MODEL

WBS NUMBER	FOR CITY OF HOUSTON USE ONLY
R-000267-0179-4	
DRAWING SCALE	
AS NOTED	
CITY OF HOUSTON PM	
NAWARAJ PANTA, P.E.	

DWG. NO.	SHEET NO.
LCK-S-01	29 OF 321

DESIGN CRITERIA

1. DESIGN CODE INTERNATIONAL BUILDING CODE 2021 WITH CITY OF HOUSTON AMENDMENTS

2. DESIGN LOADS:

   A. LIVE LOADS: (PSF)DEAD LOADS

SLABS OF GRADE	100	PSF	NATURAL GAS GENERATOR WEIGHT	XX LBS
STORAGE & MECHANICAL	150	PSF	ELECTRICAL BUILDING WEIGHT	95,000 LBS

   B. DEAD LOADS (SUPERIMPOSED)

SLABS OF GRADE	15	PSF
STORAGE & MECHANICAL	15	PSF

	UNIFORM LOADS	CONCENTRATED LOADS
STAIRS & EXISTING WAY	100 PSF	300 LBS
HANDRAILS & GUARD RAILS	50 LB/FT	200 LBS

3. WIND SPEED 146 MPH 3 SEC. GUST (ULTIMATE)
   EXPOSURE CATEGORY "C"
   RISK CATEGORY III
   DESIGN WIND FORCE ON NATURAL GAS GENERATOR XX LBS
   DESIGN WIND FORCE ON ELECTRICAL BUILDING XX LBS

GENERAL NOTES

1. THE CONTRACTOR SHALL COMPARE THE STRUCTURAL DRAWINGS WITH THE ARCHITECTURAL, CIVIL, PLUMBING, MECHANICAL AND ELECTRICAL DRAWINGS AS TO LAYOUT DIMENSIONS AND ELEVATIONS. ALL DISCREPANCIES, IF ANY ARE FOUND, SHALL BE REPORTED TO THE ARCHITECT FOR PROPER ADJUSTMENT BEFORE PROCEEDING WITH WORK. ANY DISCREPANCIES WITH THE STRUCTURAL DOCUMENTS SHALL BE IMMEDIATELY BROUGHT TO THE ATTENTION OF THE ARCHITECT/ENGINEER PRIOR TO THE SUBMISSION OF BIDS OF PROPOSALS, BEFORE COMMENCING THE WORK IN QUESTION. NO FIELD CHANGES OR DEVIATIONS FROM THE DESIGN ARE TO BE MADE WITHOUT PRIOR WRITTEN APPROVAL OF THE ARCHITECT AND/OR STRUCTURAL ENGINEER. NO CHANGE ORDER CONSIDERATION WILL BE GIVEN TO CHANGES FOR WHICH THE ARCHITECT AND/OR ENGINEER WERE NOT CONTACTED PRIOR TO CONSTRUCTION OF THE AFFECTED ITEM.

2. IN THE EVENT THAT CERTAIN FEATURES OF THE CONSTRUCTION ARE NOT FULLY SHOWN IN THE DRAWING OR CALLED OUT IN THE STRUCTURAL NOTES OR IN THE SPECIFICATIONS, THEN SUCH CONSTRUCTION SHALL BE IN THE SAME CHARACTER FOR SIMILAR CONDITIONS THAT ARE SHOWN OR CALLED FOR.

3. SEE ARCHITECTURAL DRAWINGS FOR FLOOR ELEVATIONS, SLOPE, AND THE LOCATION OF DEPRESSED FLOOR AREAS, AND OTHER REQUIREMENTS AT COLUMNS, WALLS, STAIRWELLS, SLABS, ETC. THE CONTRACTOR SHALL COMPARE THE STRUCTURAL SECTIONS WITH THE ARCHITECTURAL SECTIONS AND REPORT ANY DISCREPANCY TO THE ARCHITECT PRIOR TO FABRICATING OR INSTALLING STRUCTURAL MEMBERS.

4. PRINCIPAL OPENINGS THROUGH THE FRAMING ARE SHOWN ON DRAWINGS. THE CONTRACTOR SHALL EXAMINE THE ARCHITECTURAL AND MECHANICAL DRAWINGS FOR THE REQUIRED OPENINGS AS HE SHALL PROVIDE FOR ALL OPENINGS WHETHER SHOWN ON THE DRAWINGS OR NOT AND SHALL VERIFY SIZE AND LOCATION OF ALL OPENINGS WITH THE MECHANICAL CONTRACTOR. ANY DEVIATION FROM THE OPENINGS SHOWN ON THE STRUCTURAL DRAWINGS SHALL BE BROUGHT TO THE ENGINEER'S ATTENTION FOR APPROVAL.

5. REFER TO THE SPECIFICATIONS PROVIDED WITH THIS SUBMITTAL FOR THE REQUIRED STRUCTURAL SUBMITTALS THAT MUST BE SUBMITTED FOR E.O.R. REVIEW.

6. SPECIFICATIONS ARE PART OF THE CONSTRUCTION DOCUMENTS AND MUST BE USED IN CONJUNCTION WITH THE DRAWINGS.

7. DETAILS LABELED "TYPICAL DETAILS" ON DRAWINGS APPLY TO SITUATIONS OCCURRING ON THE PROJECT THAT ARE THE SAME OR SIMILAR TO THOSE SPECIFICALLY DETAILED, SUCH DETAILS APPLY WHETHER OR NOT THEY ARE REFERENCED AT EACH LOCATION. NOTIFY E.O.R. OF CONFLICTS REGARDING APPLICABILITY OF "TYPICAL DETAILS".

8. DO NOT LOAD THE SLAB ON GRADE WITH ERECTION CRANES OR ERECTION EQUIPMENT. THE SLAB HAS NOT BEEN DESIGNED FOR CRANE LOADS AND WILL REQUIRE AN INCREASE OF THICKNESS AND/OR REINFORCEMENT. OBTAIN E.O.R. APPROVAL ON PROPOSED CRANE SUPPORT PLAN FOR SLABS PRIOR TO COMMENCING WORK.

9. DO NOT STORE OR STACK CONSTRUCTION MATERIALS ON POURED OR ERECTED FLOOR/ROOFS IN EXCESS OF 80 PERCENT OF LIVE LOAD. CONTRACTOR SHALL ENSURE THAT ALL SUB-CONTRACTORS ARE INFORMED OF LOAD RESTRICTIONS. AVOID IMPACT WHEN PLACING MATERIALS OF POURED OR ERECTED SLABS FLOOR OR ROOF.

10. THE CONTRACT STRUCTURAL DOCUMENTS REPRESENT THE FINISHED STRUCTURE. THE CONTRACTOR IS RESPONSIBLE FOR THE MEANS OR METHODS OF CONSTRUCTION, PROVIDE ALL MEASURES REQUIRED TO PROTECT THE STRUCTURE, WORKMEN AND OTHER PERSONS DURING CONSTRUCTION; INCLUDING SHORING FOR CONSTRUCTION EQUIPMENT, SHORING FOR THE BUILDING, FORMS AND SCAFFOLDING, SHORING FOR THE RETAINING WALLS AND OTHER TEMPORARY SUPPORTS REQUIRED.

11. ALL STAIR MEMBERS INCLUDING, BUT NOT LIMITED TO, STRINGERS AND HANDRAILS SHALL BE DESIGNED BY STAIR ENGINEER AND STEEL FABRICATOR.

12. SHOP DRAWINGS AND OTHER ITEMS SHALL BE SUBMITTED TO THE ENGINEER FOR REVIEW PRIOR TO FABRICATION. ALL SHOP DRAWINGS SHALL BE REVIEWED BY THE GENERAL CONTRACTOR BEFORE SUBMITTAL. THE ENGINEER'S REVIEW IS TO BE FOR CONFORMANCE WITH THE DESIGN CONCEPT AND GENERAL COMPLIANCE WITH THE RELEVANT CONTRACT DOCUMENTS. THE ENGINEER'S REVIEW DOES NOT RELIEVE THE CONTRACTOR OF THE SOLE RESPONSIBILITY TO REVIEW, CHECK AND COORDINATE THE SHOP DRAWINGS PRIOR TO SUBMISSION. THE CONTRACTOR REMAINS SOLELY RESPONSIBLE FOR ERRORS AND OMISSIONS ASSOCIATED WITH THE PREPARATION OF SHOP DRAWINGS AS THEY PERTAIN TO MEMBER SIZES, DETAILS, DIMENSIONS, ETC.

13. SHOP DRAWINGS SHALL BE PREPARED WITH SUFFICIENT DETAIL AND NOTATION FOR FIELD ERECTION AND INSTALLATION. PHOTO COPIES OF THE CONTRACT DRAWINGS FOR USE AS SHOP DRAWINGS WILL NOT BE PERMITTED.

FOUNDATION NOTES

1. THE FOUNDATION SYSTEM HAS BEEN DESIGNED BASED ON THE FOLLOWING RECOMMENDATIONS SPECIFIED IN THE GEOTECHNICAL INVESTIGATION REPORT NUMBER HGT2210460.1.1 (A) BY HVJ ASSOCIATES, INC., DATED 10/24/2025. THE FOUNDATION SYSTEM IS DRILLED PIERS AND HAS BEEN DESIGNED USING A NET ALLOWABLE BEARING CAPACITY OF 6,000 PSF FOR TOTAL LOADS AND 4,500 PSF FOR DEAD PLUS SUSTAINED LIVE LOADS. REFER TO PLAN FOR TOTAL DEPTH BELOW EXISTING GRADE.

2. THE CONTRACTOR MUST OBTAIN A COPY OF THE GEOTECHNICAL REPORT DESCRIBED ABOVE AND FOLLOW ALL RECOMMENDATIONS IN REGARDS TO SOIL PREPARATION, COMPACTION, REMOVAL AND FILL REQUIREMENTS AS NECESSARY TO ACHIEVE THE DESIGN SOIL BEARING PRESSURE CAPACITY IF REQUIRED.

3. IN GENERAL SITE PREPARATION SHOULD CONSIST OF REMOVING ANY EXISTING FOUNDATIONS, PAVED AREAS, GRASS, TREE ROOTS, AND STRIPPING ORGANIC TOP SOILS. THE EXPOSED SUBGRADE SHOULD BE PROOF-ROLLED TO DETECT LOCAL WEAK AREAS WHICH SHOULD BE EXCAVATED, PROCESSED, AND RECOMPACTED IN LOOSE LIFTS OF APPROXIMATELY EIGHT-INCH THICKNESS. IN FLOOR SLAB, SUBGRADE SOILS SHOULD BE COMPACTED TO A MINIMUM OF 95% OR THE PROCTOR MAXIMUM DRY DENSITY (ASTM D698) AT A MOISTURE CONTENT WITHIN -1% TO +3% OF MAXIMUM MOISTURE. TREE STUMPS, IF PRESENT, SHOULD BE REMOVED BELOW FLOOR SLAB OR PAVEMENT GRADE, AND REMOVE 2 FEET OF EXISTING SOIL AND REPLACE WITH SELECTED FILL AS PER CITY OF HOUSTON STANDARD CONSTRUCTION SPECIFICATIONS. REFER TO GEOTECHNICAL REPORT.

4. SEE CIVIL DRAWINGS FOR ALL EXTERIOR SLABS AND CURBS AND LIMITS OF EXCAVATION.

5. DURING THE PLACEMENT AND FINISHING OF SLAB, USE FOGGING OR MISTING EQUIPMENT TO APPLY MOISTURE TO THE SLAB AREAS UNTIL FINAL CURING HAS BEGUN TO AVOID EXCESSIVELY RAPID EVAPORATION OF WATER FROM THE SLAB. DO NOT USE SPRAY WATER BOTTLES THAT APPLY LARGE AMOUNTS OF WATER THE SLAB SURFACE

6. FOR ALL REINFORCED CONCRETE FOUNDATION MEMBERS, CONTRACTOR SHALL FOLLOW ALL THE APPLICABLE ITEMS ON THE "REINFORCED CONCRETE NOTES:".

7. PROTECT PIPES AND CONDUITS RUNNING THROUGH WALLS AND SLABS WITH 1/2" EXPANSION MATERIAL.

8. DO NOT PLACE FOOTINGS OR SLABS AGAINST SUBGRADE CONTAINING FREE WATER.

9. MAINTAIN PROPER SITE DRAINAGE DURING CONSTRUCTION TO ENSURE SURFACE RUNOFF AWAY FROM STRUCTURES AND TO PREVENT PONDING OF SURFACE RUNOFF NEAR THE STRUCTURES.

10. KEEP OPEN EXCAVATIONS AROUND BUILDING DRY, BACKFILL AGAINST FOUNDATIONS AND GRADE BEAMS AS SOON AS PRACTICAL. PUMP WATER OUT OF OPEN EXCAVATIONS OF FLOODING PRIOR TO BACKFILLING.

REINFORCED CONCRETE NOTES

1. DETAILING OF CONCRETE REINFORCEMENT AND ACCESSORIES SHALL BE IN ACCORDANCE WITH ACI PUBLICATION 315, LATEST EDITION.

2. CONCRETE REINFORCING SHALL CONFORM TO THE REQUIREMENTS OF ASTM A-615, GRADE 60. WELDED WIRE FABRIC SHALL BE IN ACCORDANCE WITH ASTM A-185.

3. CONCRETE IN ALL AREAS SHALL HAVE SAND AND GRAVEL AGGREGATE CEMENT CONFORMING TO ASTM C 150, TYPE I, AND DESIGNATED COMPRESSIVE STRENGTH (f'c) AT 28 DAYS AS CALLED OUT IN NOTE #4 BELOW. ALSO SEE PROJECT SPECIFICATIONS FOR DIFFERENT AGGREGATE AND COMPRESSIVE STRENGTH REQUIREMENTS.

4. UNLESS NOTED OTHERWISE, CONCRETE SHALL MEET OR EXCEED THE MINIMUM COMPRESSIVE STRENGTH REQUIREMENTS AT 28 DAYS:

   A. CONCRETE DESIGN STRENGTH:

   a. GRADE BEAMS & SLABS ON GRADE: f'c = 4,000 PSI

   b. PIER CAPS, WALLS, STAIRS & ANY OTHER NOT NOTED: f'c = 4,000 PSI

   c. PIERS: f'c = 4,000 PSI

   B. CONCRETE COVER REINFORCEMENT COVER SHALL MEET THE FOLLOWING REQUIREMENTS (UNLESS SPECIFICALLY OTHERWISE IN PLANS):

   a. SLAB ON GRADE 1" TOP

   b. GRADE BEAMS 1 1/2" TOP, 3" BOTTOM, 2" SIDES

   c. DRILLED PIERS 3" ALL SURFACES

   d. COLUMNS 1 1/2" ALL SURFACES

   (SEE SECTION 20.6 ACI 318-19 FOR CONDITIONS NOT NOTED.

5. FLY ASH MAY BE USED TO REPLACE A PORTION OF THE PORTLAND CEMENT, THE RATIO OF FLY ASH TO THE TOTAL OF THE FLY ASH AND CEMENT IN A MIX SHALL NOT EXCEED 20%. FLY ASH SHALL CONFORM TO ASTM C618, TYPE C OR F.

6. IT SHALL BE THE RESPONSIBILITY OF THE CONTRACTOR TO COORDINATE WITH THE CONCRETE SUPPLIER TO ENSURE A PUMPABLE AND WORKABLE MIX. TESTING LAB WILL CONTROL SLUMP AND ONLY TESTING LAB CAN ADD WATER ON JOB SITE. CONCRETE SUPPLIER WILL INFORM TESTING LAB/CONTRACTOR OF MAXIMUM WATER ALLOWABLE THAT CAN BE ADDED ON JOB SITE BEFORE W/C RATIO IS EXCEEDED. THE USE OF PLASTICIZERS, RETARDANTS AND OTHER ADDITIVES SHALL BE AT THE OPTION OF THE CONTRACTOR SUBJECT TO THE APPROVAL OF THE STRUCTURAL ENGINEER. FOLLOW THE RECOMMENDATIONS OF THE MANUFACTURER FOR THE PROPER USE OF ADDITIVES. THE USE OF CALCIUM CHLORIDE OR OTHER CHLORIDE BEARING SALTS SHALL NOT BE PERMITTED.

7. CONCRETE SLUMP TESTS SHALL BE MADE BEFORE AND AFTER THE ADDITION OF ADMIXTURES AND MAY BE TAKEN AT THE BACK OF THE TRUCK. CONCRETE FOR THE PREPARATION OF TEST CYLINDERS SHALL BE TAKEN FROM THE HOSE END FOR CONCRETE PLACED BY PUMP.

8. ALL REINFORCING STEEL SHALL BE LAPPED PER THE LATEST EDITION OF THE ACI-318-19. SPLICES. CORNERS AND INTERSECTIONS WITH STANDARD 90 DEGREE BEND OR CORNER BARS. LAP TOP BARS AT CENTER OF SPAN. LAP WELDED WIRE MESH ONE FULL MESH AT SIDE AND END LAPS. DO NOT LAP OR WELD REINFORCEMENT IN THE FIELD UNLESS SPECIFICALLY SHOWN ON STRUCTURAL DRAWINGS OR APPROVED BY E.O.R. WHEN SPECIFICALLY APPROVED, PROVIDE WELDED REINFORCEMENT IN ACCORDANCE WITH ASTM A706. USE LOW HYDROGEN ELECTRODES FOR WELDING OF REINFORCEMENT IN CONFORMANCE WITH "WELDING STEEL, METAL INSERTS AND CONNECTIONS IN REINFORCED CONCRETE CONSTRUCTION" AMERICAN WELDING SOCIETY AWS D1.4 WHERE REQUIRED, PROVIDE DOWELS TO MATCH SIZE AND SPACING OF MAIN REINFORCING.

9. REFER TO ARCHITECTURAL, MECHANICAL, ELECTRICAL AND PLUMBING DRAWINGS FOR ANY OTHER ADDITIONAL SLEEVES, ANCHORS, VENT OPENINGS, ETC., NOT SHOWN ON STRUCTURAL PLANS THAT MIGHT BE REQUIRED.

10. PLACE CONCRETE IN A MANNER SO AS TO PREVENT SEGREGATION OF THE MIX. DELAY FLOATING AND TROWELLING OPERATIONS UNTIL CONCRETE HAS LOST SURFACE WATER SHEEN OR ALL FREE WATER. DO NOT SPRINKLE FREE CEMENT ON THE SLAB SURFACE. FINISHING OF SLAB SURFACES SHALL COMPLY WITH THE RECOMMENDATIONS OF AC1 302.1 AND 304.

11. UNLESS NOTED OTHERWISE ON PLAN, CONTROL JOINTS IN SLAB ON GRADE TO BE LOCATED APPROXIMATELY 225 SQ. FT. GRIDS. ACTUAL LOCATION TO BE DETERMINED BY OWNER OR CONTRACTOR.

12. PROVIDE 7 DAY CURING OF SLAB IMMEDIATELY AFTER FINISHING, USING ONE OF THE FOLLOWING METHODS

   A. CONTINUOUSLY WATERED BURLAP

   B. WATERPROOF MEMBRANES

13. PROTECT THE CONCRETE SURFACE BETWEEN FINISHING OPERATIONS ON HOT, DRY WINDY DAYS OR ANY OTHER TIME THAT PLASTIC SHRINKAGE CRACKS COULD DEVELOP BY USING WET BURLAP, PLASTIC MEMBRANE OR FOGGING. PROTECT CONCRETE SLAB AT ALL TIMES FROM RAIN, HAIL OR OTHER INJURIOUS EFFECTS.

14. UNLESS SPECIFIED CONCRETE MUST REACH THE FOLLOWING PERCENTAGES OF ITS 28-DAY COMPRESSIVE STRENGTH (F'c), BEFORE FORMS MAY BE REMOVED. 40% WALLS, COLUMNS & BEAM SIDES, 70% JOISTS, PANS & BEAM BOTTOMS (IF RESHORED), 85% SHORING FOR FLOOR SYSTEMS (IF NOT SHORED)

15. AN INDEPENDENT CERTIFIED TESTING LABORATORY SHALL VERIFY AND PROVIDE REPORTS CERTIFYING THE FOLLOWING:

   A. CONCRETE PLANT BATCH TICKETS FOR EACH TRUCK TO VERIFY THAT THE CONCRETE MATCHES THE APPROVED DESIGN MIX.

   B. CONCRETE SLUMP IS IN ACCORDANCE WITH APPROVED DESIGN MIX.

   C. CONCRETE PLACEMENT PREPARATIONS ARE IN ACCORDANCE WITH ACI SPECIFICATIONS.

   D. CONTROL / CONTRACTION JOINTS ARE INSTALLED WITHIN THE ACI TIME ALLOWANCE.

   E. PROPER CURING METHODS ARE BEING UTILIZED.

16. NO CONCRETE SHALL BE PLACED OUTSIDE OF THESE SPECIFICATIONS WITHOUT THE ENGINEER'S APPROVAL, ANY ITEMS NOT IN COMPLIANCE WITH THE OUTLINED SPECIFICATION SHALL BE REPORTED TO THE ARCHITECT AND STRUCTURAL ENGINEER WITHIN 24 HOURS.

17. REFER TO ARCHITECTURAL DRAWINGS FOR WATER PROOFING REQUIREMENTS.

18. UNLESS OTHERWISE NOTED ALL VERTICAL REINFORCEMENT ON COLUMNS SHALL BE SPLICED A MINIMUM OF 36 BAR DIAMETERS.

19. THE SHORES FOR THE FLOOR SLAB & BEAMS SHALL BE ADEQUATE TO CARRY THE TOTAL WEIGHT OF THE SLAB SYSTEM TO THE GROUND, ALL SHORING / RESHORING DESIGN SHALL BE THE RESPONSIBILITY OF THE CONTRACTOR.

20. THERE SHALL BE NO HORIZONTAL CONSTRUCTION JOINTS IN CONCRETE POURS. ALL CONSTRUCTION JOINTS SHALL BE MADE IN THE MIDDLE OF THE SPAN. WHEN A BEAM INTERSECTS A GIRDER AT MIDDLE 1/3 OF SPAN, THE JOINTS SHALL BE OFFSET DISTANCE EQUAL TO TWICE THE WIDTH OF THE BEAM. THE LOCATION OF CONSTRUCTION JOINTS SHALL BE APPROVED BY THE STRUCTURAL ENGINEER. ADDITIONAL REINFORCING AT CONSTRUCTION JOINTS SHALL BE SPECIFIED BY THE BEGINNER, SEE TYPICAL DETAIL. PROVIDE 75 FEET MAXIMUM SPACING OF CONSTRUCTION JOINTS IN GRADE BEAMS.

21. THE MAXIMUM WATER TO CEMENT RATIO: 0.50 (MAX) FOR NON-AIR ENTRAINED. AND 0.48 (MAX) FOR AIR ENTRAINED.

22. MAX. AGGREGATE SIZE 3/4 INCH.

23. PROVIDE BAR SUPPORT ACCESSORIES IN ACCORDANCE WITH THE LATEST ACI MANUAL, STANDARD PRACTICE FOR DETAILING REINFORCED CONCRETE STRUCTURES, SUPPORT BEAM REINFORCING ON BEAMS BOLSTERS SPACED NOT MORE THAN 4 FEET ON CENTER.

24. PROVIDE BAR SUPPORTS WITH PLASTIC COATED LEGS OR HOT DIP GALVANIZING AFTER FABRICATION FOR CONCRETE EXPOSED TO VIEW. PROVIDE STAINLESS STEEL BAR SUPPORTS FOR CONCRETE TO RECEIVE A SAND BLAST FINISH.

25. FOR PIPE INSTALLED HORIZONTALLY WITHIN THE SLAB, PROVIDE MAXIMUMS OUTSIDE DIAMETER OF 30% OF SLAB THICKNESS. PLACE CONDUIT OR PIPE BETWEEN THE TOP AND BOTTOM LAYER OF REINFORCEMENT WITH THE CENTER THIRD OF SLAB, DO NOT SPACE CONDUITS OF PIPES CLOSER THAN THREE DIAMETERS OF WIDTHS ON CENTER.

26. CONTRACTOR AND SUPPLIER TO COORDINATE ADDITIONAL ADMIXTURES AND SUBMIT MIX DESIGNS AS REQUIRED FOR MASS CONCRETE. AFTER COMPLETION OF THE EQUIPMENT FOUNDATION, THE CONCRETE SHALL BE INSPECTED AND ALL CRACKS FROM SHRINKAGE AND CONSTRUCTION STRESS SHALL BE REPAIRED.

REINFORCED CONCRETE NOTES CONTINUED

TENSION DEVELOPMENT LENGTH ('ld')

BAR SIZE	f'c= 3000 PSI		f'c= 4000 PSI		f'c= 5000 PSI		f'c= 6000 PSI		f'c= 7000 PSI		f'c= 8000 PSI		f'c= 10000 PSI	
	ld TOP	ld BOT	ld TOP	ld BOT	ld TOP	ld BOT	ld TOP	ld BOT	ld TOP	ld BOT	ld TOP	ld BOT	ld TOP	ld BOT
#3	1'-9"	1'-4"	1'-6"	1'-2"	1'-5"	1'-1"	1'-3"	1'-0"	1'-2"	1'-0"	1'-1"	1'-0"	1'-0"	1'-0"
#4	2'-4"	1'-10"	2'-1"	1'-7"	1'-10"	1'-5"	1'-8"	1'-3"	1'-7"	1'-2"	1'-5"	1'-1"	1'-4"	1'-0"
#5	3'-0"	2'-3"	2'-7"	2'-0"	2'-4"	1'9"	2'-1"	1'-7"	2'-0"	1'-6"	1'-10"	1'-5"	1'-8"	1'-3"
#6	3'-7"	2'-9"	3'-11"	2'-4"	2'-9"	2'-1"	2'-6"	1'-11"	2'-4"	1'-10"	2'-2"	1'-8"	1'-11"	1'-6"
#7	5'-2"	4'-0"	4'-5"	3'-6"	4'-0"	3'-1"	3'-8"	2'-10"	3'-5"	2'-8"	3'-2"	2'-5"	2'-10"	2'-2"
#8	5'-11"	4'-7"	5'-2"	3'-11"	4'-7"	3'-6"	4'-2"	3'-3"	4'-0"	3'-1"	3'-8"	2'-10"	3'-3"	2'-6"
#9	6'-8"	5'-2"	5'-9"	4'-5"	5'-2"	4'-0"	4'-9"	3'-8"	4'-5"	3'-5"	4'-1"	3'-2"	3'-8"	2'-10"
#10	7'-6"	5'-10"	6'-6"	5'-0"	5'-10"	4'-6"	5'-4"	4'-1"	5'-0"	3'-10"	4'-7"	3'-7"	4'-2"	3'-2"
#11	8'-4"	6'-5"	7'-3"	5'-7"	6'-6"	5'-0"	5'-11"	4'-7"	5'-6"	4'-3"	5'-1"	3'-11"	4'-5"	3'-6"

NOTES:
1. TABULATED VALUES ARE APPLICABLE ONLY IF CLEAR SPACING OF BARS BEING DEVELOPED OR SPLICED IS NOT LESS THAN 'db', CLEAR COVER IS NOT LESS THAN 'db' AND STIRRUPS OR TIES THROUGHOUT 'ld' IS NOT LESS THAN CODE MINIMUM, OR CLEAR SPACING OF BARS BEING DEVELOPED OR SPLICED IS NOT LESS THAN 2" 'db' AND CLEAR COVER IS NOT LESS THAN 'db'. FOR OTHER CASES , MULTIPLY TABULATED VALUES BY 1.5.
2. 'TOP' BARS ARE HORIZONTAL REBARS WITH MORE THAN 12 IN OF FRESH CONCRETE CAST BELOW THE BARS AT THE DEVELOPMENT LENGTH.
3. FOR LIGHT WEIGHT CONCRETE MULTIPLY THE TABULATED VALUES BY 1.3.
4. FOR EPOXY COATED BARS, MULTIPLY THE TABULATED VALUES BY 1.5 FOR 'BOT' BARS, OR BY 1.3. FOR TOP BARS.
5. FOR REINFORCEMENT OTHER THAN GRADE 60, MODIFY THE TABULATED VALUES BY THE RATIO OF THE REINFORCEMENT YIELD STRENGTH DIVIDED BY 60 KSI.

TENSION LAP SPLICES-CLASS B- TOP & BOT BARS

BAR SIZE	f'c= 3000 PSI		f'c= 4000 PSI		f'c= 5000 PSI		f'c= 6000 PSI		f'c= 7000 PSI		f'c= 8000 PSI		f'c= 10000 PSI	
	TOP	BOT	TOP	BOT	TOP	BOT	TOP	BOT	TOP	BOT	TOP	BOT	TOP	BOT
#3	2'-4"	1'-9"	2'-0"	1'-6"	1'-10"	1'-5"	1'-8"	1'-4"	1'-7"	1'-4"	1'-5"	1'-4"	1'-3"	1'-0"
#4	3'-1"	2'-4"	2'-8"	2'-1"	2'-5"	1'-10"	2'-2"	1'-8"	2'-1"	1'-7"	1'-11"	1'-5"	1'-8"	1'-7"
#5	3'-10"	3'-0"	3'-4"	2'-7"	3'-0"	2'-4"	2'-9"	2'-1"	2'-7"	2'-0"	2'-4"	1'-10"	2'-1"	1'-8"
#6	4'-8"	3'-7"	4'-0"	3'-1"	3'-7"	2'-9"	3'-3"	2'-8"	2'-11"	2'-4"	2'-10"	2'-2"	2'-6"	1'-11"
#7	6'-9"	5'-2"	5'-10"	4'-6"	5'-3"	4'-0"	4'-9"	3'-8"	4'-6"	3'-5"	4'-2"	3'-2"	3'-8"	2'-10"
#8	7'-9"	5'-11"	6'-8"	5'-2"	6'-0"	4'-7"	5'-5"	4'-2"	5'-1"	3'-11"	4'-9"	3'-8"	4'-3"	3'-3"
#9	8'-8"	6'-8"	7'-6"	5'-2"	6'-9"	5'-2"	6'-2"	4'-9"	5'-9"	4'-5"	5'-4"	4'-1"	4'-9"	3'-8"
#10	9'-10"	7'-6"	8'-6"	5'-9"	7'-7"	5'-10"	6'-11"	5'-4"	6'-6"	5'-0"	6'-0"	4'-7"	5'-4"	4'-2"
#11	10'-11"	8'-4"	9'-5"	7'-3"	8'-5"	6'-6"	7'-8"	5'-11"	7'-2"	5'-6"	6'-8"	5'-1"	5'-11"	4'-5"

NOTES:
1. TABULATED VALUES ARE APPLICABLE ONLY IF CLEAR SPACING OF BARS BEING DEVELOPED OR SPLICED IS NOT LESS THAN 'db', CLEAR COVER IS NOT LESS THAN 'db' AND STIRRUPS OR TIES THROUGHOUT 'ld' IS NOT LESS THAN CODE MINIMUM, OR CLEAR SPACING OF BARS BEING DEVELOPED OR SPLICED IS NOT LESS THAN 2" 'db' AND CLEAR COVER IS NOT LESS THAN 'db'. FOR OTHER CASES , MULTIPLY TABULATED VALUES BY 1.5.
2. 'TOP' BARS ARE HORIZONTAL REBARS WITH MORE THAN 12 IN OF FRESH CONCRETE CAST BELOW THE BARS AT THE DEVELOPMENT LENGTH.
3. FOR LIGHT WEIGHT CONCRETE MULTIPLY THE TABULATED VALUES BY 1.3.
4. FOR EPOXY COATED BARS, MULTIPLY THE TABULATED VALUES BY 1.5 FOR 'BOT' BARS, OR BY 1.3. FOR TOP BARS.
5. FOR REINFORCEMENT OTHER THAN GRADE 60, MODIFY THE TABULATED VALUES BY THE RATIO OF THE REINFORCEMENT YIELD STRENGTH DIVIDED BY 60 KSI.
6. FOR CLASS 'A' SPLICE USE SAME AS TENSION DEVELOPMENT LENGTH.

"Ldh" TENSION DEPELOPMENT (EMBEDMENT) LENGTH FOR STANDARD END HOOKS (GRADE 60 BARS - NORMAL WEIGHT CONCRETE - GENERAL USE)

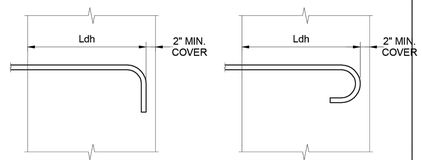

STANDARD 90 HOOK SIDE COVER > 21/2" | STANDARD 180 HOOK SIDE COVER > 21/2"

BAR SIZE	fc=3000 psi Ldh	fc=4000 psi Ldh	fc=5000 psi Ldh	fc=6000 psi Ldh
# 3	9"	7"	7"	6"
# 4	11"	10"	9"	8"
# 5	1'-2"	1'-0"	11"	10"
# 5	1'-5"	1'-3"	1'-1"	1'-0"
# 6	1'-7"	1'-5"	1'-3"	1'-2"
# 7	1'-10"	1'-7"	1'-5"	1'-4"
# 8	2'-1"	1'-10"	1'-7"	1'-6"
# 9	2'-4"	2'-0"	1'-10"	1'-8"
# 10	2'-8"	2'-2"	2'-0"	1'-10"

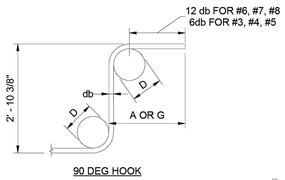

90 DEG HOOK

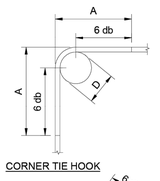

CORNER TIE HOOK

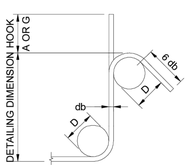

135 DEG HOOK

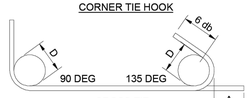

CROSS TIE

STIRRUP & TIE HOOK TYPES

BAR SIZE	D (IN.)	90 DEG HOOK A OR G (IN.)	135 DEG HOOK A OR G (IN.)
#3	1 1/2	4	4
#4	2	4 1/2	4 1/2
#5	2 1/2	6	5 1/2

APP. | DATE | REVISION | NO.

P.E. SEAL REQUIRED
PRELIMINARY
SUBJECT TO REVISION

This document is released for informational purposes under the authority of DAVID MOORE P.E. 139405 on 12/11/2025 It is not to be used for regulatory approval, permit, bidding, or construction purposes.

CONCEPT ENGINEERS
TX. FIRM REGISTRATION # F-04417
Structures for the whole community

IDS Engineering Group
13430 NW. Freeway
Suite 700
Houston, Tx. 77040
713.462.3178
TxEng Firm 2726
TxSurv Firm 10110700

CITY OF HOUSTON
HOUSTON PUBLIC WORKS

LIFT STATION RENEWAL AND REPLACEMENT FY 2023

GENERAL NOTES

WBS NUMBER	R-000267-0179-4
DRAWING SCALE	AS NOTED
CITY OF HOUSTON PM	NAWARAJ PANTA, P.E.
DWG. NO.	LCK-S-02
SHEET NO.	30 OF 321

FOR CITY OF HOUSTON USE ONLY

STRUCTURAL STEEL NOTES

1. ALL STRUCTURAL STEEL MEMBERS SHALL CONFORM TO THE FOLLOWING DESIGNATION

W SHAPES	ASTM A992		(50KSI)
SQUARE RECTANGULAR TUBES	ASTM A500	GR. C	(50 KSI)
ROUND TUBES (HSS)	ASTM A500	GR. C	(46 KSI)
STEEL PIPES	ASTM A53	GR. B	(35 KSI)
CHANNELS	ASTM A36		(36 KSI)
PLATES, ANGLES, MISC, STEEL	ASTM A36		(36 KSI)
ANCHOR RODS	ASTM F1554	GR.36	(36 KSI)
HARDENED STEEL WASHERS	ASTM F436		
HEAVY HEX NUTS	ASTM A563		
SEE NOTE 16			

2. ALL STRUCTURAL STEEL SHALL BE DETAILED FABRICATED AND ERECTED IN ACCORDANCE WITH A.I.S.C. STANDARDS 15th EDITION.

3. FOR ALL HIGH STRENGTH BOLTS, HARDENED WASHERS SHALL BE PROVIDED ON NUT SIDE OF BOLT FOR TORQUING AS REQUIRED.

4. ALL WELDING SHALL CONFORM TO STANDARD OF THE AMERICAN WELDING SOCIETY, AWS D1.1 LATEST EDITION STRUCTURAL WELDING CODE

5. E70 ELECTRODES FOR ALL FIELD AND SHOP WELDING SHALL CONFORM TO ANSI/AWS D1.1 LATEST EDITION UNLESS NOTED OTHERWISE ALL WELD SIZES SHALL BE PER AISC CODE. REFER TO NOTE 17 FOR ADDITIONAL INFORMATION.

6. SPLICING STRUCTURAL MEMBERS IS PROHIBITED WITHOUT PRIOR APPROVAL OF THE STRUCTURAL ENGINEER.

7. ANY TEMPORARY SHORING OR BRACING DURING THE CONSTRUCTION PHASE BEFORE COMPLETION OF CONNECTIONS IS THE RESPONSIBILITY OF THE CONTRACTOR.

8. IF NOT SHOWN ON THE DRAWINGS, SUPPORT OF METAL DECK AROUND COLUMN CLOSURE, SCREED PLATES AROUND THE OPENINGS AND EDGE OF SLAB SHALL BE PROVIDED BY THE CONTRACTOR.

9. ALL FIELD CONNECTIONS TO BOLTED WITH A325 BOLTS. BOLTS TO BE LEJEUNE TYPE OR EQUAL. PROVIDE MINIMUM OF TWO BOLTS PER CONNECTION, MINIMUM BOLT DIAMETER 3/4".

10. ALL EXPOSED STEEL SHALL BE HOT DIPPED GALVANIZED.

11. THE BEAM-TO-BEAM AND BEAM-TO-COLUMN SIMPLE SHEAR CONNECTIONS SHOULD DEVELOP THE END REACTION OF THE CONNECTED BEAM. THE END REACTION OF THE CONNECTED BEAM CAN BE OBTAINED FROM THE LOAD CARRYING CAPACITY OF THE BEAM ON THE BASIS OF EQUIVALENT UNIFORM LOADS GIVEN IN THE PART 3 OF AISC MANUAL LATEST EDITIONS (UNLESS LARGER REACTION IS SHOWN ON DRAWINGS). THE MINIMUM SHEARING CAPACITY OF 15 KIPS SHALL BE PROVIDED FOR ALL BEAMS. REFER TO NOTE 22 FOR COMPOSITE BEAM CONNECTION REQUIREMENTS.

12. THE DESIGN OF STRUCTURAL STEEL CONNECTIONS IS THE RESPONSIBILITY OF THE CONTRACTOR AND THE STEEL FABRICATOR. THE DESIGN OF STEEL CONNECTIONS SHALL BE PERFORMED BY A REGISTERED PROFESSIONAL ENGINEER, AND SHALL BE SUBMITTED TO THE ENGINEER OF RECORD FOR REVIEW.

13. STEEL BEAM BEARING ON MASONRY SHALL HAVE A MINIMUM OF 8" BEARING AND ANCHOR AS SHOWN ON THE DRAWINGS, MASONRY SHALL ALSO HAVE SOLID MASONRY OR FULLY GROUTED CELLS FROM STEEL BEARING TO GRADE BEAM BELOW.

14. UNLESS OTHERWISE NOTED, ALL MOMENT CONNECTIONS SHALL BE MADE WITH FULL PENETRATION WELD AND SHALL BE DESIGNED TO DEVELOP FULL CAPACITY OF THE MEMBER.

15. ANY MISCELLANEOUS STEEL NOT SHOWN ON THE PLANS, BUT REQUIRED DUE TO COORDINATION BETWEEN DIFFERENT DISCIPLINES SHALL BE INCLUDED BY THE CONTRACTOR IN THEIR BID.

16. CONNECTION MATERIALS
    a. BEAM, COLUMNS, STIFFENER PLATES AND DOUBLE PLATES TO MATCH GRADE STEEL OF STRUCTURAL ELEMENT
    b. ALL CONNECTION MATERIALS, EXCEPT AS OTHERWISE NOTED HEREIN OR IN THE DRAWINGS, INCLUDING BEARING PLATES, GUSSET PLATES, STIFFENER PLATES, ETC. ASTM A36

17. WELD MINIMUM SIZE & STRENGTH
    a. PROVIDE MINIMUM SIZE OF FILLET WELDS AS SPECIFIED IN TABLE J2,4 OF AISC MANUAL.
    b. PROVIDE MINIMUM EFFECTIVE THROAT THICKNESS OF PARTIAL PENETRATION GROOVE WELDS AS SPECIFIED ON TABLE J2.3 OF AISC MANUAL
    c. DEVELOP THE FULL TENSILE STRENGTH OF THE MEMBER ELEMENT JOIN ON ALL SHOP AND FIELD WELDS U.N.O.
    d. WHERE CONNECTIONS ARE NOTED ON DRAWINGS AS MOMENT CONNECTIONS PROVIDE WELDS TO DEVELOP FULL FLEXURAL CAPACITY OF THE LESSER MEMBER.

18. PROVIDE BOLTS, NUTS AND WASHERS THAT ARE HOT DIPPED GALVANIZED ACCORDING TO ASTM A153, CLASS C WHEN USED TO CONNECT STEEL ELEMENTS THAT ARE HOT DIP GALVANIZED AFTER FABRICATION.

19. FABRICATE AND ASSEMBLE STRUCTURAL MEMBERS/ASSEMBLIES IN SHOP TO GREATEST EXTEND POSSIBLE.

20. IF CAMBER OF STRUCTURAL MEMBERS IS INDICATED ON THE DRAWINGS WHERE POSSIBLE, CAMBER OF BEAMS TO BE APPLIED BY COLD BEND PROCESS, CAMBER INDICATED IN THE DRAWINGS ARE INTENDED TO BE FINAL CAMBER AT THE TIME OF ERECTION, AND WITHIN TOLERANCE O MINUS ZERO TO PLUS 1/8" FOR EACH TEM FEET OF MEMBER LENGTH. ALL BEAMS SHALL BE INSTALLED SO THAT NATURAL OF SPECIFIC CAMBER IS ORIENTED UPWARDS.

21. CONTRACTOR SHALL BE RESPONSIBLE FOR ALL ERRORS OF DETAILING ON THE SHOP DRAWINGS, ERRORS IN FABRICATION, AND THE CORRECT FITTING OF STRUCTURAL STEEL MEMBERS.

22. FIELD MODIFICATION TO STRUCTURAL STEEL IS PROHIBITED WITHOUT PRIOR APPROVAL BY THE E.O.R.

23. CLEAN STEEL OF RUST, LOSE MILL SCALE AND OTHER FOREIGN MATERIALS WHERE REQUIRED FOR FABRICATION, FITTING UP. OR WELDING.

24. DO NOT CUT STRUCTURAL STEEL MEMBERS FOR THE WORK OF OTHER TRADES WITHOUT PRIOR REVIEW AND APPROVAL OF THE E.O.R.

25. AFTER FABRICATION, HOT DIP GALVANIZE STRUCTURAL STEEL AND THEIR CONNECTIONS PERMANENTLY EXPOSED TO THE OUTSIDE, SUCH ITEMS INCLUDE BUT ARE NOT LIMITED TO:

    1. SHELF ANGLES
    2. PARAPET WALL SUPPORTING MEMBERS
    3, SCREEN WALL SUPPORTING MEMBERS
    4. EMBEDDED PLATES IN CONCRETE
    5. BUILDING CLADDING SUPPORT STEEL.

26. EXAMINE THE ARCHITECTURAL AND STRUCTURAL DRAWINGS FOR OTHER ITEMS THAT REQUIRE HOT DIPPED GALVANIZATION

27. PROVIDE NON-SHRINK NON-METALLIC GROUT FOR BASE PLATES WITH MINIMUM 28 DAYS COMPRESSIVE STRENGTH OF 6000 PSI COMPLETE GROUT WORK BEFORE ROOF CONCENTRATED POURING OF A SINGLE STORY BUILDING.

28. STRUCTURAL STEEL CONNECTIONS NOT COMPLETELY DETAILED ON THE DRAWINGS, INCLUDING MATERIAL GRADE & SIZES, WELD SIZES AND NUMBER OF BOLTS SHALL BE DESIGNED BY THE CONTRACTOR UNDER SUPERVISION OF REGISTERED PROFESSIONAL ENGINEER WHO IS REGISTERED ON THE STATE OF TEXAS AN EMPLOYED BY STEEL FABRICATOR, DESIGN CALCULATIONS TO BE SEALED BY FABRICATOR'S REGISTERED PROFESSIONAL ENGINEER, SHOP DRAWINGS SUBMITTED WITHOUT COMPLETE DESIGN CALCULATIONS WILL NOT BE REVIEWED. WHERE PREDESIGNED CONNECTIONS ARE TAKEN DIRECTLY FROM TABLES IN AISC MANUAL. CALCULATIONS NEED TO BE SUBMITTED PROVIDED JOB DESIGN CONDITIONS PRECISELY MATCH THOSE ASSUMED IN THE AISC MANUAL.

29. FURNISH SHOP DRAWINGS FOR E.O.R.'S REVIEW PRIOR TO FABRICATION. INCLUDE WELDING PROCEDURES, TESTING PROGRAMS FOR WELDING AND HIGH STRENGTH BOLTING, COATING MATERIAL, AND ERECTION SEQUENCE IN SHOP DRAWINGS.

30. MILL STEEL COLUMNS ENDS TO FIT FLUSH WITH BASE PLATE, AND END PLATES, FIELD ASSEMBLY OF THESE STEEL ELEMENTS TO THE COLUMNS IS PROHIBITED.

31. PROVIDE HEADED STUDS (SHEAR AND ANCHOR) MADE OF MATERIAL CONFORMING TO AWS D1.1 CLAUSE 9.2.6.

32. PROVIDE DEFORMED ANCHORS MADE OF MATERIAL CONFORMING TO ASTM A1064.

33. WELD STUDS ACCORDING TO MANUFACTURER'S RECOMMENDATIONS. MANUAL ARC (STICK) WELDING OF HEADED STUDS AND/OR DEFORMED ANCHORS IS NOT ALLOWED.

34. PRIOR TO DECK PLACEMENT, VERIFY THAT STEEL BEAMS BEARING ON MASONRY HAVE 6" MINIMUM BEARING AND ARE ANCHORED S SHOWN ON DRAWINGS.

EXISTING CONSTRUCTION NOTES

1. BEFORE PROCEEDING WITH ANY WORK WITHIN THE EXISTING FACILITY, THE CONTRACTOR SHALL FAMILIARIZE HIMSELF WITH EXISTING STRUCTURAL AND OTHER CONDITIONS. IT SHALL BE THE CONTRACTOR'S RESPONSIBILITY TO PROVIDE ALL NECESSARY BRACING, SHORING, AND OTHER SAFEGUARDS TO MAINTAIN ALL PARTS OF THE EXISTING WORK IN A SAFE CONDITION DURING THE PROCESS OF CONSTRUCTION, AND TO PROTECT FROM DAMAGE THOSE PORTIONS OF THE EXISTING WORK WHICH ARE TO REMAIN.

2. THE CONTRACTOR SHALL FIELD VERIFY THE DIMENSIONS, ELEVATIONS, ETC. NECESSARY FOR THE PROPER CONSTRUCTION AND ALIGNMENT OF THE NEW PORTIONS OF THE WORK TO THE EXISTING WORK. THE CONTRACTOR SHALL MAKE ALL MEASUREMENTS NECESSARY FOR FABRICATION AND ERECTION OF STRUCTURAL MEMBERS. ANY DISCREPANCY SHALL BE IMMEDIATELY BROUGHT TO THE ATTENTION OF THE ENGINEER.

3. WELDING TO AND WITHIN AN EXISTING FACILITY PRESENTS POTENTIAL HAZARDS, INCLUDING:
    A. FIRE HAZARD DUE TO THE EXISTING CONSTRUCTION AND BUILDING CONTENTS.
    B. STRUCTURAL LIQUEFACTION DUE TO WELDING ACROSS THE FULL SECTION OF STRUCTURAL MEMBERS.
    RECOMMENDATIONS TO PREVENT THESE HAZARDS INCLUDE:
    A. PROTECT EXISTING COMBUSTIBLES PRIOR TO WELDING. KEEP A SEPARATE WATCHMAN AND SEVERAL FIRE EXTINGUISHERS ON HAND
    B. WELD IN SMALL INCREMENTS. ALLOW WELDS TO HARDEN BEFORE CONTINUING TO THE NEXT INCREMENT.
    C. DO NOT LEAVE THE SITE UNTIL SATISFIED THAT NO FIRE HAZARD EXISTS.

4. THE CONTRACTOR SHALL BE RESPONSIBLE FOR THE DESIGN AND ERECTION OF ALL SHORING NECESSARY TO SAFEGUARD THE EXISTING STRUCTURE. THE CONTRACTOR SHALL SUBMIT A DETAILED PLAN FOR SHORING, BRACING, AND PROTECTION OF THE EXISTING CONSTRUCTION.

DEMOLITION NOTES

1. PERFORM DEMOLITION IN A CAREFUL AND CONTROLLED MANNER TO PREVENT DAMAGE TO EXISTING STRUCTURES , UTILITES AND IMPROVEMENTS TO REMAIN.

2. CONTRACTOR SHALL BE SOLEY RESPONSIBLE FOR ALL MEANS, METHODS, SEQUENCES . PROCEDURES, AND SAFETY PRECAUTIONS ASSOCIATED WITH DEMOLITION. ENGINEER'S DRAWINGS INDICATE LIMITS OF DEMOLITION ONLY AND DO NOT PRESCRIBE HOW DEMOLITION IS TO BE PERFORMED.

3. VERIFY FIELD CONDITIONS PRIOR TO STARTING WORK. PROVIDE ALL NECESSARY BRACING, SHORING, AND TEMPORARY SUPPORTS TO PREVENT MOVEMENT OR DAMAGE TO ADJACENT OR REMAINING STRUCTURES.

4. IMMEDIATELY CEASE OPERATIONS AND NOTIFY OWNER AND ENGINEER IF MOVEMENT, SETTLEMENT, OR UNSAFE CONDITIONS ARE OBSERVED DO NOT RESUME WORK UNTIL SAFETY HAS BEEN RESTORED.

5. REMOVE ONLY PORTIONS OF CONSTRUCTION INDICATED ON THE DRAWINGS. WHERE LIMITS ARE UNCLEAR, CONFIRM EXTENT OF REMOVAL WITH ENGINEER PRIOR TO PROCEEDING.

6. PERFORM ALL WORK IN ACCORDANCE WITH LOCAL, STATE AND FEDERAL REGULATIONS INCLUDING OSHA REQUIREMENTS. MAINTAIN SAFE ACCESS AND CONTROL DUST, DEBRIS, AND NOISE AT ALL TIMES.

7. REPAIR OR REPLACE, AT NO COST TO THE OWNER, ANY DAMAGE RESULTING FROM DEMOLITION OPERATIONS OR DEMOLITION PERFORMED BEYOND THE LIMITS INDICATED.

8. ENGINEER'S RESPONSIBILITY IS LIMITED TO DEFINING THE EXTENT OF DEMOLITION. CONTRACTOR SHALL BE FULLY RESPONSIBLE FOR MEANS, METHODS SAFETY AND PRTECTION OF EXISTING STRUCTURES AND FACILITIES.

STRUCTURAL ABBREVIATIONS

AB	ANCHOR BOLT	FLR	FLOOR	PERP	PERPENDICULAR
ALT	ALTERNATIVE	FOM	FACE OF MASONRY	PL	PLATE
ALUM	ALUMINUM	FS	FAR SIDE	PLUMB	PLUMBING
ARCH	ARCHITECTURAL	FT	FOOT	PNL	PANEL
B	BOTTOM	FTG	FOOTING	POLY	POLYETHYLENE
B/	BOTTOM OF	FUT	FUTURE	PREFAB	PREFABRICATED
BLDG	BUILDING	GA	GAGE	PSF	POUNS PER SQUARE FOOT
BM	BEAM	GALV	GALVANIZED	PSI	POUNS PER SQUARE INCH
B/BOT	BOTTOM	GYP	GYPSUM	QTY	QUANTITY
BRG	BEARING	HORIZ	HORIZONTAL	R	RADIUS
C	CHANNEL SHAPE	HP	HIGH POINT	RE	CALLED RIGHT END
C TO C	CENTER TO CENTER	HSS	HOLLOW STRUCTURAL SECTION	RE:	REFERENCE
CANT	CANTILIVER	HT	HEIGHT	REINF	REINFORCE (MENT) (D)
CJ	CONTROL JOINT	IN	INCH	REQ	REQUIRE
CONST JT	CONSTRUCTION JOINT	INFO	INFORMATION	REQD	REQUIRED
CL	CENTER LINE	INT	INTERIOR	REV	REVISION
CLR	CLEAR	INSUL	INSULATION	SCHED	SCHEDULE
CMU	CONCRETE MASONRY UNIT	JB	JOIST BOTTOM / SEAT ELEVATION	SF	SQUARE FOOT
COL	COLUMN	JST	JOIST	SHT	SHEET
CONC	CONCRETE	JT	JOINT	SI	SQUARE INCH
CONN	CONNECTION	K	KIPS	SIM	SIMILAR
CONST	CONSTRUCTION	KO	KNOCK OUT	SL	SLOPE
CONT	CONTINUOUS	KSF	KIPS PER SQUARE FOOT	SOG	SLAB ON GRADE
COORD	COORDINATE	KSI	KIPS PER SQUARE INCH	SPA	SPACES (D)
CTR	CENTER	L	ANGLE	SPEC	SPECIFICATION
CTRD	CENTERED	LB	POUND	STD	STANDARD
D	DEPTH	LE	LEFT END	STIFF	STIFFENER
DBA	DEFORMED ANCHOR BAR	LG	LONG	STL	STEEL
DBL	DOUBLE	LLH	LONG LEG HORIZONTAL	SW	SHORTWAY
DBL TEE	PRECAST DOUBLE TEE	LLV	LONG LEG VERTICAL	SYM	SYMETRICAL
DIA	DIAMETER	LSH	LONG SIDE HORIZONTAL	T	TOP
DIAG	DIAGONAL	LSV	LONG SIDE VERTICAL	T/	TOP OF
DIM	DIMENSION	LP	LOW POINT	T&B	TOP AND BOTTOM
DN	DOWN	LW	LONG WAY	THK	THICK
DTL	DETAIL	M	MIDDLE	TOF	TOP OF FOOTING
DWG	DRAWING	MANUF/MFR	MANUFACTER	TOJ	TOP OF JOIST
DWL	DOWEL	MATL	MATERIAL	TOS	TOP OF STEEL
EA	EACH	MAX	MAXIMUM	TRANSV	TRANSVERSE
EE	EACH END	MECH	MECHANICAL	TYP.	TYPICAL
EF	EACH FACE	MEP	MECHANICAL/ELECTRICAL/ PLUMBING	UON	UNLESS OTHERWISE NOTED
EJ	EXPANSION JOINT			VERT	VERTICAL
EL/ELEV	ELEVATION	MEZZ	MEZZANINE	WF	WIDE FLANGE SHAPE
EOR	ENGINEER OF RECORD	MIN	MINIMUM	W/	WITH
EOS	EDGE OF SLAB	MISC	MISCELLANEOUS	W/O	WITHOUT
EQ	EQUAL	MO	MASONRY OPENING	WP	WORK POINT
EQUIP	EQUIPMENT	MSL	MEAN SEA LEVEL	WS	WATERSTOP
ES	EACH SIDE	MTL	METAL	WT	T SHAPE
EW	EACH WAY	NO	NUMBER	WWF	WELDED WIRE FABRIC
EXIST	EXISTING	NS	NEAR SIDE	&	AND
EXP	EXPANSION	N.T.S.	NOT TO SCALE	@	AT
EXT	EXTERIOR	OC	ON CENTER	Ø	DIAMETER
FD	FLOOR DRAIN	OC EW	ON CENTER EACH WAY	#	NUMBER
FDN	FOUNDATION	OPNG	OPENING	±	PLUS/MINUS
FL	FULL LENGTH	OPP	OPPOSITE		
FF	FINISH FLR	PEMB	PREENGINEERRED METAL BUILDING		

NO.	DATE	REVISION	APP.

P.E. SEAL REQUIRED

PRELIMINARY

SUBJECT TO REVISION

This document is released for informational purposes under the authority of DAVID MOORE P.E. 139405 on 12/11/2025 It is not to be used for regulatory approval, permit, bidding, or construction purposes.

CONCEPT ENGINEERS

TX. FIRM REGISTRATION # F-04417

Structures for the whole community

IDS Engineering Group

13430 NW. Freeway
Suite 700
Houston, Tx. 77040
713.462.3178

TxEng Firm 2726
TxSurv Firm 10110700

CITY OF HOUSTON

HOUSTON PUBLIC WORKS

LIFT STATION RENEWAL AND REPLACEMENT FY 2023

GENERAL NOTES

WBS NUMBER	FOR CITY OF HOUSTON USE ONLY
R-000267-0179-4	
DRAWING SCALE	
AS NOTED	
CITY OF HOUSTON PM	
NAWARAJ PANTA, P.E.	
DWG. NO. LCK-S-03	SHEET NO. 31 OF 321

SPECIAL INSPECTIONS NOTES

THE FOLLOWING STATEMENT AND SCHEDULES OF INSPECTIONS OUTLINE THE SPECIAL INSPECTIONS AND TESTS NECESSARY FOR THIS PROJECT.
THE GENERAL CONTRACTOR SHALL HIRE AN "APPROVED AGENCY" PER THE INTERNATIONAL BUILDING CODE (IBC) SECTION 1703 TO PROVIDE SPECIAL INSPECTIONS FOR THIS PROJECT. THE QUALIFIED SPECIAL INSPECTOR SHALL REFERENCE THESE PLANS AND CHAPTER 17 OF THE IBC FOR ALL SPECIAL INSPECTION REQUIREMENTS. SPECIAL INSPECTION REPORTS SHOULD BE SUBMITTED WEEKLY.
THE APPROVED AGENCY SHALL SUBMIT COPIES OF ALL INSPECTION REPORTS TO THE ARCHITECT/ENGINEER AND THE AUTHORITY HAVING JURISDICTION (BUILDING OFFICIAL) FOR REVIEW. THE SPECIAL INSPECTION SHALL BRING DISCREPANCIES TO THE IMMEDIATE ATTENTION OF THE GENERAL CONTRACTOR FOR CORRECTION. IF THE DISCREPANCIES ARE NOT CORRECTED, THE DISCREPANCIES SHALL BE BROUGHT TO THE ATTENTION OF THE BUILDING OFFICIAL AND TO THE ARCHITECT PRIOR TO THE COMPLETION OF THAT PHASE OF THE WORK. IN ADDITION TO SPECIAL INSPECTION REPORTS AND TESTS, SUBMIT REPORTS AND CERTIFICATES NOTED IN IBC 1704.5 TO THE AUTHORITY HAVING JURISDICTION. FINAL REPORTS DOCUMENTING SPECIAL INSPECTIONS AND TESTS MUST BE SUBMITTED TO THE BUILDING OFFICIAL PER IBC 1704.2.4.

STATEMENT OF SPECIAL INSPECTIONS:

THIS SPECIAL INSPECTIONS STATEMENT HAS BEEN PREPARED WITH THE UNDERSTANDING THAT SEOR AND THE BUILDING OFFICIAL REPRESENTATIVE WILL:

- REVIEW AND ACCEPT THE QUALIFICATIONS OF THE SPECIAL INSPECTORS
- OBSERVE THE SPECIAL INSPECTION OPERATIONS TAKING PLACE AT THE PROJECT SITE TO ENSURE THAT THE SPECIAL INSPECTORS ARE COMPETENT AND CARRYING OUT THEIR ASSIGNED RESPONSIBILITIES AS SPECIFIED IN THIS STATEMENT.
- REVIEW ALL THE SPECIAL INSPECTION REPORTS THAT THE SPECIAL INSPECTOR HAS PROVIDED THEM WITH.
- CONDUCT INSPECTIONS AS SPECIFIED BY IBC SECTION 110.3

THE FOLLOWING SPECIAL INSPECTIONS APPLY TO THIS PROJECT:

- SPECIAL INSPECTIONS FOR STANDARD BUILDINGS PER IBC 1705.1 [REQUIRED]
- STORM SHELTER INSPECTIONS SHALL MATCH THE REQUIREMENTS OF THE HOST BUILDING PER SECTION 106 OF 2020 ICC-500. [REQUIRED]

SPECIAL INSPECTION OF SHOP-FABRICATED GRAVITY LOAD-BEARING MEMBERS AND ASSEMBLIES:

SPECIAL INSPECTION OF SHOP-FABRICATED GRAVITY LOAD BEARING MEMBERS & ASSEMBLIES SHALL BE PERFORMED BY THE SPECIAL INSPECTOR AS STATED IN SECTION 1704.2.5, WHICH INCLUDES THE FOLLOWING:

- BEFORE FABRICATION BEGINS, SPECIAL INSPECTORS REPRESENTING THE GENERAL CONTRACTOR NEED TO VISIT THE FABRICATOR'S SHOP TO VERIFY THAT THE FABRICATOR HAS DETAILED FABRICATION AND QUALITY CONTROL (QC) PROCEDURES IN PLACE. THESE PROCEDURES SHOULD COVER INSPECTION, WORKMANSHIP CONTROL, MATERIAL CONTROL, AND THE FABRICATOR'S ABILITY TO ADHERE TO THE APPROVED CONSTRUCTION DOCUMENTS AND REFERENCED STANDARDS.
- THE FABRICATOR MUST HAVE DETAILED PROCEDURES FOR MATERIAL CONTROL AVAILABLE FOR THE INSPECTOR TO REVIEW. THESE PROCEDURES SHOULD SHOW THAT THE FABRICATOR CAN MAINTAIN ACCURATE RECORDS AND PROCESSES SO THAT AT ANY POINT DURING FABRICATION, THE MATERIAL SPECIFICATION, GRADE, AND RELEVANT TEST REPORTS FOR PRIMARY LOAD-CARRYING MEMBERS CAN BE IDENTIFIED.

SPECIAL INSPECTION OF STRUCTURAL STEEL:

AS PER IBC SECTION 1705.2.1, A QUALIFIED SPECIAL INSPECTOR OF AN "APPROVED AGENCY" PROVIDING QUALITY ASSURANCE (QA) SPECIAL INSPECTIONS FOR THE PROJECT SHALL REVIEW AND CONFIRM THE FABRICATOR AND ERECTOR'S QUALITY CONTROL (QC) PROCEDURES FOR COMPLETENESS AND ADEQUACY RELATIVE TO AISC 360-16 CHAPTER N, AISC 303-16 CODE OF STANDARD AND PRACTICE, AWS D1.1-2015 STRUCTURAL WELDING CODE, AND 2018 IBC CODE REQUIREMENTS FOR THE FABRICATOR'S SCOPE OF WORK.

- QA AGENCY PROVIDING SPECIAL INSPECTIONS MUST EMPLOY PERSONNEL WHO MEET THE MINIMUM QUALIFICATION REQUIREMENTS FOR INSPECTION AND NONDESTRUCTIVE TESTING (NDT) AS PER AISC 360 SECTION N4.
- ENSURE THE FABRICATOR AND ERECTOR QUALITY CONTROL (QC) PROGRAM COMPLIES WITH AISC 360 SECTION N2.
- QC AND QA PERSONNEL SHALL INSPECT WELDS AND BOLTS PER THE SCHEDULE OF SPECIAL INSPECTIONS BELOW.
- ALL AWS D1.1 STRUCTURAL WELDING CODE PROVISIONS FOR STATICALLY LOADED STRUCTURES SHALL APPLY.
- NONDESTRUCTIVE TESTING (NDT) OF WELDS:
  - NON-DESTRUCTIVE TESTING (NDT) OF WELDED JOINTS PER AISC 360 N5.5
  - RISK CATEGORY FOR DETERMINATION OF THE EXTENT OF NDT PER AISC 360 N5.5B IS NOTED IN THE DESIGN CRITERIA AND LOADS SECTION OF THESE GENERAL REQUIREMENTS. NDT MUST BE DOCUMENTED, AND REPORTS SHOULD SPECIFY THE TESTED WELD BY PIECE MARK AND LOCATION.
- ADDITIONAL INSPECTION TASKS PER AISC 360 SECTION N5.8.

POST-INSTALLED ANCHORS TO CONCRETE AND MASONRY: SHALL COMPLY WITH IBC SECTION 1703. INSPECTIONS MUST COMPLY WITH THE REQUIREMENTS IN THE APPROVED ICC EVALUATION REPORT AND THE DESIGN REQUIREMENTS SPECIFIED ON THE DRAWINGS. REFER TO THE POST INSTALLED ANCHORS SECTION OF THESE NOTES FOR ANCHORS THAT ARE THE BASIS OF THE DESIGN. THE SPECIAL INSPECTOR MUST ENSURE THAT THE ANCHORS ARE IN ACCORDANCE WITH THE POST-INSTALLED ANCHORS SECTION OF THESE NOTES OR AS SPECIFICALLY INDICATED ON THE DRAWINGS. SUBSTITUTIONS MUST BE APPROVED BY THE SER AND REQUIRE SUPPORTING CALCULATIONS AND THE CURRENT 2018 IBC-RECOGNIZED ICC EVALUATION SERVICES (ES) REPORT. SPECIAL INSPECTORS MUST DOCUMENT COMPLIANCE WITH ALL ELEMENTS REQUIRED IN THE RELEVANT ICC EVALUATION SERVICES (ES) REPORT IN THEIR SPECIAL INSPECTION REPORT.

PREFABRICATED CONSTRUCTION: ALL PREFABRICATED CONSTRUCTION SHALL CONFORM TO IBC SECTION 1703.

PER THE ICC-500, SECTION 111.1 STRUCTURAL OBSERVATION :

DURING CONSTRUCTION OF THE STORM SHELTER, THE BUILDING OWNER SHALL EMPLOY A REGISTERED DESIGN PROFESSIONAL TO CONDUCT VISUAL OBSERVATIONS OF THE CONSTRUCTION OF THE STRUCTURAL SYSTEM FOR GENERAL CONFORMANCE TO THE APPROVED CONSTRUCTION DOCUMENTS AT SIGNIFICANT CONSTRUCTION STAGES AND AT COMPLETION OF THE CONSTRUTION OF THE STRUCTURAL SYSTEM.

STRUCTURAL OBSERVATION SHALL NOT OBVIATE THE NEED FOR OTHER INSPECTIONS OR TESTING REQUIRED BY THIS STANDARD OR APPLICABLE CODE.

DEFICIENCIES SHALL BE REPORTED IN WRITING TO THE ATHORITY HAVING JURISDICTION AND OWNER OR THE OWNER'S AUTHORIZED AGENT. AT THE CONCLUSION OF THE WORK, THE REGISTERED DESIGN PROFESSIONAL WHO MADE THE STRUCTURAL OBSERVATIONS SHALL SUBMIT TO THE AUTHORITY HAVING JURISDICTION A WRITTEN STATEMENT THAT THE SITE VISITS HAVE BEEN MADE AND SHALL IDENTIFY ANY REPORTED DEFICIENCIES THAT, TO THE BEST OF THE STRUCTURAL OBSERVER'S KNOWLEDGE, HAVE NOT BEEN RESOLVED.

SECTION 110
SPECIAL INSPECTIONS

110.1 SPECIAL INSPECTIONS

SPECIAL INSPECTION SHALL BE PROVIDED IN ACCORDANCE SITH THIS SECTION, IN ADDITION TO THOSE REQUIRED BY THE *AUTHORITY HAVING JURISDICTION* IN ACCORDANCE WITH THE *APPLICABLE CODE*. ONE STATEMENT OF *SPECIAL INSPECTIONS* SHALL BE PERMITTED TO APPLY TO BOTH *HOST BUILDING* AND *STORM SHELTER* CONSTRUCTION.

EXCEPTION: PREFABRICATED OR PANELIZED *STORM SHELTER* COMPONENTS THAT HAVE BEEN INSPECTED AND *LABELED* BY AN *APPROVED AGENCY* MEETING THE REQUIREMENTS OF THE *APLICABLE CODE*.

110.1.2 SPECIAL CASES

SPECIAL INSPECTIONS SHALL BE PROVIDED FOR PROPOSED WORK COMPRISED OF THE FOLLOWING:

1. CONSTRUCTION MATERIALS AND SYSTEMS THAT ARE ALTERNATIVES TO TRADITIONAL MATERIALS AND SYSTEMS PRESCRIBED BY THE *APPLICABLE CODE*.
2. UNUSUAL DESIGN AND CONSTRUCTION APPLICATIONS.
3. ANCHORS POS-INSTALLED IN HARDENED CONCRETE AND MASONRY, WHERE USED FOR ANCHORAGE OF *STORM SHELTER* COMPONENTS FORMING A PART OF THE *STORM SHELTER* ENCLOSURE OR FOR ANCHORAGE OF THE *STORM SHELTER* STRUCTURE TO FOUNDATIONS SHALL BE IN ACCORDANCE WITH SECTION 110.1.2.1.

110.1.2.1 SPECIAL INSPECTIONS TO VERIFY ANCHOR INSTALLATION

A *SPECIAL INSPECTION* SHALL BE PROVIDED TO VERIFY THE POS-INSTALLED ANCHOR INSTALLATION AND CAPACITY IN ACCORDANCE WITH SECTION 106.2.1. FOR POST-INSTALLED ANCHORAGE TO FOUNDATIONS, *SPECIAL INSPECTION* SHALL BE PROVIDED TO VERIFY FOUNDATION ADEQUACY IN ACCORDANCE WITH SECTIONS 106.2.1 AND 307.

TABLE 1705.3
REQUIRED SPECIAL INSPECTIONS AND TESTS OF CONCRETE CONSTRUCTION

TYPE	CONTINUOUS SPECIAL INSPECTION	PERIODIC SPECIAL INSPECTION	REFERENCED STANDARD[a]	IBC REFERENCE
1. INSPECT REINFORCEMENT, INCLUDING RESTRESSING TENDONS, AND VERIFY PLACEMENT.	-	X	ACI 318: CH. 20, 25.2, 25.3, 26.6.1-26.6.3	-
2. REINFORCING BAR WELDING:				-
a. VERIFY WELDABILITY OF REINFORCING BARS OTHER THAN ASTM A706;			AWS D1.4	
b. INSPECT SINGLE-PASS FILLET WELDS, MAXIMUM 5/16"; AND	-	X	ACI 318: 26.6.4	
c. INSPECT ALL OTHER WELDS.	X	X		
3. INSPECT ANCHORS CAST IN CONCRETE.	-	X	ACI 318: 17.8.2	-
4. INSPECT ANCHORS POST-INSTALLED IN HARDENED CONCRETE MEMBERS.[B]				-
a. ADHESIVE ANCHORS INSTALLED IN HORIZONTALLY OR UPWARDLY INCLINED ORIENTATIONS TO RESIST SUSTAINED TENSION LOADS.	X	X	ACI 318: 17.8.2.4	
b. MECHANICAL ANCHORS AND ADHESIVE ANCHORS NOT DEFINED IN 4.A.			ACI 318: 17.8.2	
5. VERIFY USE OF REQUIRED DESIGN MIX.	-	X	ACI 318: CH. 19, 26.4.3, 26.4.4	-
6. PRIOR TO CONCRETE PLACEMENT, FABRICATE SPECIMENS FOR STRENGTH TESTS, PERFORM SLUMP AND AIR CONTENT TESTS, AND DETERMINE THE TEMPERATURE OF THE CONCRETE.	X		ASTM C31 ASTM C172 ACI 318: 26.5, 26.12	-
7. INSPECT CONCRETE AND SHOTCRETE PLACEMENT FOR PROPER APPLICATION TECHNIQUES.	X		ACI 318: 26.5	-
8. VERIFY MAINTENANCE OF SPECIFIED CURING TEMPERATURE AND TECHNIQUES.	-	X	ACI 318: 26.10	-
9. INSPECT PRESTRESSED CONCRETE FOR: A. APPLICATION OF PRESTRESSING FORCES; AND B. GROUTING OF BONDED PRESTRESSING TENDONS.	X X		ACI 318: CH. 20, 25.2, 25.3, 26.6.1-26.6.3	-
10. INSPECT ERECTION OF PRECAST CONCRETE MEMBERS.	-	X	ACI 318: 26.9	-
11. FOR PRECAST CONCRETE DIAPHRAGM CONNECTIONS OR REINFORCEMENT AT JOINTS CLASSIFIED AS MODERATE OR HIGH DEFORMABILITY ELEMENTS (MDE OR HDE) IN STRUCTURES ASSIGNED TO SEISMIC DESIGN CATEGORY C, D, E OR F, INSPECT SUCH CONNECTIONS AND REINFORCEMENT IN THE FIELD FOR:			ACI 318: 26.13.1.3	-
a. INSTALLATION OF THE EMBEDDED PARTS	X			
b. COMPLETION OF THE CONTINUITY OF REINFORCEMENT ACROSS JOINTS.	X		ACI 550.5	
c. COMPLETION OF CONNECTIONS IN THE FIELD.	X			
12. INSPECT INSTALLATION TOLERANCES OF PRECAST CONCRETE DIAPHRAGM CONNECTIONS FOR COMPLIANCE WITH ACI 550.5.	-	X	ACI 318: 26.13.1.3	-
13. VERIFY IN-SITU CONCRETE STRENGTH, PRIOR TO STRESSING OF TENDONS IN POST-TENSIONED CONCRETE AND PRIOR TO REMOVAL OF SHORES AND FORMS FROM BEAMS AND STRUCTURAL SLABS.	-	X	ACI 318: 26.11.2	-
14. INSPECT FORMWORK FOR SHAPE, LOCATION AND DIMENSIONS OF THE CONCRETE MEMBER BEING FORMED.	-	X	ACI 318: 26.11.1.2(b)	-

SCHEDULES OF SPECIAL INSPECTIONS:

TABLE 1705.6
REQUIRED SPECIAL INSPECTIONS AND TESTS OF SOILS

TYPE	CONTINUOUS SPECIAL INSPECTION	PERIODIC SPECIAL IN- SPECTION
1. VERIFY MATERIALS BELOW SHALLOW FOUNDATIONS ARE ADEQUATE TO ACHIEVE THE DESIGN BEARING CAPACITY.	-	X
2. VERIFY EXCAVATIONS ARE EXTENDED TO PROPER DEPTH AND HAVE REACHED PROPER MATERIAL.	-	X
3. PERFORM CLASSIFICATION AND TESTING OF COMPACTED FILL MATERIALS.	-	X
4. VERIFY USE OF PROPER MATERIALS, DENSITIES AND LIFT THICKNESSES DURING PLACEMENT AND COMPACTION OF COMPACTED FILL.	X	-
5. PRIOR TO PLACEMENT OF COMPACTED FILL, INSPECT SUBGRADE AND VERIFY THAT SITE HAS BEEN PREPARED PROPERLY.	-	X

TABLE 1705.2.3
REQUIRED SPECIAL INSPECTIONS OF OPEN-WEB STEEL JOISTS AND JOIST GIRDERS

TYPE	CONTINUOUS SPECIAL INSPECTION	PERIODIC SPECIAL INSPECTION	REFERENCED STANDARD[a]
1. INSTALLATION OF OPEN-WEB STEEL JOISTS AND JOIST GIRDERS.			
a. END CONNECTIONS – WELDING OR BOLTED.	-	X	SJI SPECIFICATIONS LISTED IN SECTION 2207.1.
b. BRIDGING – HORIZONTAL OR DIAGONAL.	-	X	-
1. STANDARD BRIDGING.	X	X	SJI SPECIFICATIONS LISTED IN SECTION 2207.1.
2. BRIDGING THAT DIFFERS FROM THE SJI SPECIFICATIONS LISTED IN SECTION 2207.1.	-	X	-

MINIMUM REQUIREMENTS FOR INSPECTIONS OF STRUCTURAL STEEL CONSTRUCTION

INSPECTION TASKS	QC	QA	REFERENCED STANDARD
INSPECTION TASKS PRIOR TO WELDING			
1. Welder qualification records and continuity records	P	O	AISC 360 TABLE N5.4-1
2. Welding procedure specifications (WPSs) available	P	O	AISC 360 TABLE N5.4-1
3. Manufacturing certifications for welding consumables available	P	O	AISC 360 TABLE N5.4-1
4. Material identification (type/grade)	P	O	AISC 360 TABLE N5.4-1
5. Welder Identification system	P	O	AISC 360 TABLE N5.4-1
8. Configuration and finish of access holes	P	O	AISC 360 TABLE N5.4-1
9. Fit-up of fillet welds • Dimensions (alignment gaps at root) • Cleanliness (condition of steel surfaces) • Tacking (tack weld quality and location)	P	O	AISC 360 TABLE N5.4-1
10. Check welding equipment	P	O	AISC 360 TABLE N5.4-1
INSPECTION TASKS DURING WELDING			
1. Use of qualified welders	P	O	AISC 360 TABLE N5.4-2
2. Control and handling of welding consumables • Packaging • Exposure Control	P	O	AISC 360 TABLE N5.4-2
3. No welding over cracked track welds	P	O	AISC 360 TABLE N5.4-2
4. Environmental conditions • Wind speed within limits • Precipitation and temperature	P	O	AISC 360 TABLE N5.4-2
5. WPS followed • Settings on welding equipment • Travel speed • Selected welding materials • Shielding gas type/flowrate • Preheat applied • Interpass temperature maintained (min/max) • Proper position (F,V,H,OH)	P	O	AISC 360 TABLE N5.4-2
6. Welding techniques • Interpass and final cleaning • Each pass within profile limitations • Each pass meets quality requirements	P	O	AISC 360 TABLE N5.4-2
INSPECTION TASKS AFTER WELDING			
1. Welds cleaned	P	O	AISC 360 TABLE N5.4-3
2. Size, length, and locations of welds	P	O	AISC 360 TABLE N5.4-3
3. Welds meet visual acceptance criteria • Crack prohibition • Weld/base-metal fusion • Crater cross section • Weld profiles • Weld size • Undercut • Porosity	P	O	AISC 360 TABLE N5.4-3
4. Arc strikes	P	O	AISC 360 TABLE N5.4-3
5. k-area	P	O	AISC 360 TABLE N5.4-3
6. Weld access holes in roled heavy shapes and built-up heavy shapes	P	O	AISC 360 TABLE N5.4-3
7. Backing removed and weld tabs removed (if required)	P	O	AISC 360 TABLE N5.4-3
8. Repair activities	P	O	AISC 360 TABLE N5.4-3
9. Document acceptance or rejection of welded joint or member	P	O	AISC 360 TABLE N5.4-3
10. No prohibited welds have been added without the approval of the EOR	P	O	AISC 360 TABLE N5.4-3
INSPECTION TASKS PRIOR TO BOLTING			
1.Manufacturer's certifications available for fastener materials	P	O	AISC 360 TABLE N5.6-1
2.Fasteners marked in accordance with ASTM requirements	P	O	AISC 360 TABLE N5.6-1
3.Correct fasteners selected for the joint detail (grade, type, bolt length if threads are to be excluded from shear plane)	P	O	AISC 360 TABLE N5.6-1
4.Correct bolting procedures selected for joint detail	P	O	AISC 360 TABLE N5.6-1
5.Connecting elements, including the appropriate faying surface condition and hole preparation, if specified, meet applicable requirements.	P	O	AISC 360 TABLE N5.6-1
6.Pre-installation verification testing by installation personnel observed and documented for fastener assemblies and methods used	P	O	AISC 360 TABLE N5.6-1
7.Proper storage provided for bolts, nuts, washers and other fasteners components	P	O	AISC 360 TABLE N5.6-1
INSPECTION TASKS DURING BOLTING			
1. Fastener assemblies, of suitable condition, placed in all holes and washers are positioned as required	P	O	AISC 360 TABLE N5.6-2
2. Joint brought to the snug-tight condition prior to the pre-tensioning operation	P	O	AISC 360 TABLE N5.6-2
3. Fastener component not turned by the wrench prevented from rotating	P	O	AISC 360 TABLE N5.6-2
4. Fasteners are pre-tensioned in accordance with the RCSC Specification, progressing systematically from the most rigid point toward the free edges.	P	O	AISC 360 TABLE N5.6-2
INSPECTION TASKS AFTER BOLTING	P	O	AISC 360 TABLE N5.6-2
1. Document acceptance or rejection of bolted connections	P	O	AISC 360 TABLE N5.6-2

O - Observe these items on a random basis. Operations need not be delayed pending these inspections
P - Perform these tasks for each welded joint or member, each bolted connection, or each steel element

NO.	DATE	REVISION	APP.

P.E. SEAL REQUIRED
PRELIMINARY
SUBJECT TO REVISION
This document is released for informational purposes under the authority of DAVID MOORE P.E. 139405 on 12/11/2025 It is not to be used for regulatory approval, permit, bidding, or construction purposes.

CONCEPT ENGINEERS
TX. FIRM REGISTRATION # F-04417
Structures for the whole community

IDS Engineering Group
13430 NW. Freeway
Suite 700
Houston, Tx. 77040
713.462.3178
TxEng Firm 2726
TxSurv Firm 10110700

CITY OF HOUSTON
HOUSTON PUBLIC WORKS

LIFT STATION RENEWAL AND REPLACEMENT FY 2023

GENERAL NOTES

WBS NUMBER	FOR CITY OF HOUSTON USE ONLY
R-000267-0179-4	
DRAWING SCALE	
AS NOTED	
CITY OF HOUSTON PM	
NAWARAJ PANTA, P.E.	
DWG. NO. LCK-S-04	SHEET NO. 32 OF 321

NO.	DATE	REVISION	APP.

PROPOSED RETAINING WALL
RE: CIVIL. SEE SHEET S-6
FOR DETAILS

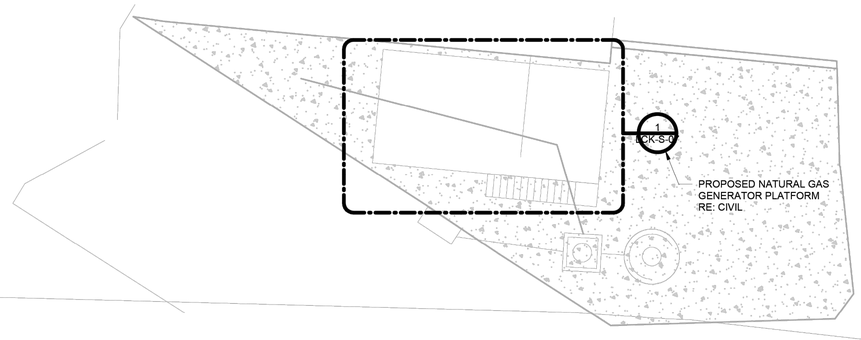

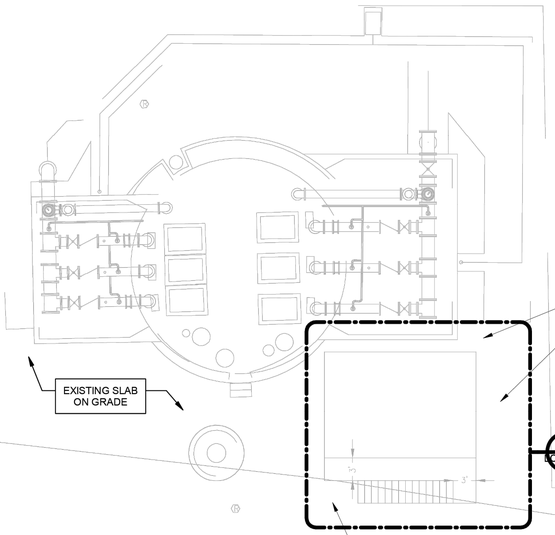

EXTENT OF EXISTING SLAB REMOVAL SHALL BE A MINIMUM OF 3'-0" BEYOND THE EDGE OF THE PROPOSED ELECTRICAL BUILDING AND CONCRETE STAIRS, TYPICAL. CONTRACTOR SHALL COORDINATE EXACT REMOVAL LIMITS AND BUILDING LOCATIONS WITH CIVIL DRAWINGS AND VERIFY ALL DIMENSIONS AND LAYOUT IN THE FIELD PRIOR TO DEMOLITION. STRUCTURAL DRAWINGS INDICATE GENERAL INTENT ONLY.

PORTION OF EXISTING SLAB-ON-GRADE TO BE REMOVED. REPLACE WITH NEW STRUCTURAL SLAB AS SHOWN ON SHEET S-7. SEE DETAIL SXX FOR CONNECTION TO EXISTING SLAB, TYPICAL. CONTRACTOR SHALL VERIFY EXISTING CONDITIONS, INCLUDING SLAB THICKNESS, REINFORCING, AND ELEVATIONS, PRIOR TO SAWCUTTING OR REMOVAL. CONTRACTOR IS RESPONSIBLE FOR MAINTAINING STABILITY OF ADJACENT SLAB AND COORDINATING FINAL ELEVATIONS, JOINT ALIGNMENT, AND SAWCUT LOCATIONS IN THE FIELD.

P.E. SEAL
REQUIRED

PRELIMINARY

SUBJECT TO REVISION

This document is released for informational purposes under the authority of DAVID MOORE P.E. 139405 on 12/11/2025 It is not to be used for regulatory approval, permit, bidding, or construction purposes.

CONCEPT ENGINEERS
TX. FIRM REGISTRATION # F-04417
Structures for the whole community

IDS Engineering Group
13430 NW. Freeway
Suite 700
Houston, Tx. 77040
713.462.3178
TxEng Firm 2726
TxSurv Firm 10110700

CITY OF HOUSTON

HOUSTON PUBLIC WORKS

LIFT STATION RENEWAL AND REPLACEMENT FY 2023

SITE PLAN

WBS NUMBER	FOR CITY OF HOUSTON USE ONLY
R-000267-0179-4	
DRAWING SCALE	
AS NOTED	
CITY OF HOUSTON PM	
NAWARAJ PANTA, P.E.	
SHEET NO. 33 OF 321	

DWG. NO.
LCK-S-05

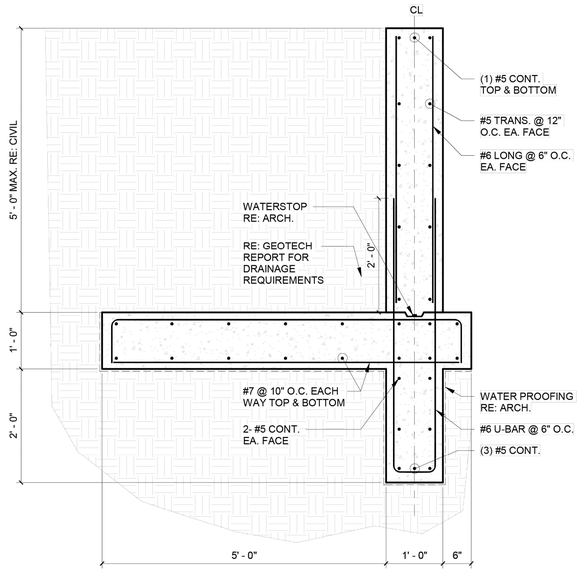

1 RETAINING WALL DETAIL

3/4" = 1'-0"

NO.	DATE	REVISION	APP.

P.E. SEAL
REQUIRED

PRELIMINARY

SUBJECT TO REVISION

This document is released for informational purposes under the authority of DAVID MOORE P.E. 139405 on 12/11/2025 It is not to be used for regulatory approval, permit, bidding, or construction purposes.

CONCEPT ENGINEERS
TX. FIRM REGISTRATION # F-04417
Structures for the whole community

IDS Engineering Group
13430 NW. Freeway
Suite 700
Houston, Tx. 77040
713.462.3178
TxEng Firm 2726
TxSurv Firm 10110700

CITY OF HOUSTON

HOUSTON PUBLIC WORKS

LIFT STATION RENEWAL AND REPLACEMENT FY 2023

RETAINING WALL PLAN & DETAILS

WBS NUMBER	FOR CITY OF HOUSTON USE ONLY
R-000267-0179-4	
DRAWING SCALE	
AS NOTED	
CITY OF HOUSTON PM	
NAWARAJ PANTA, P.E.	
SHEET NO. 34 OF 321	

DWG. NO. LCK-S-06

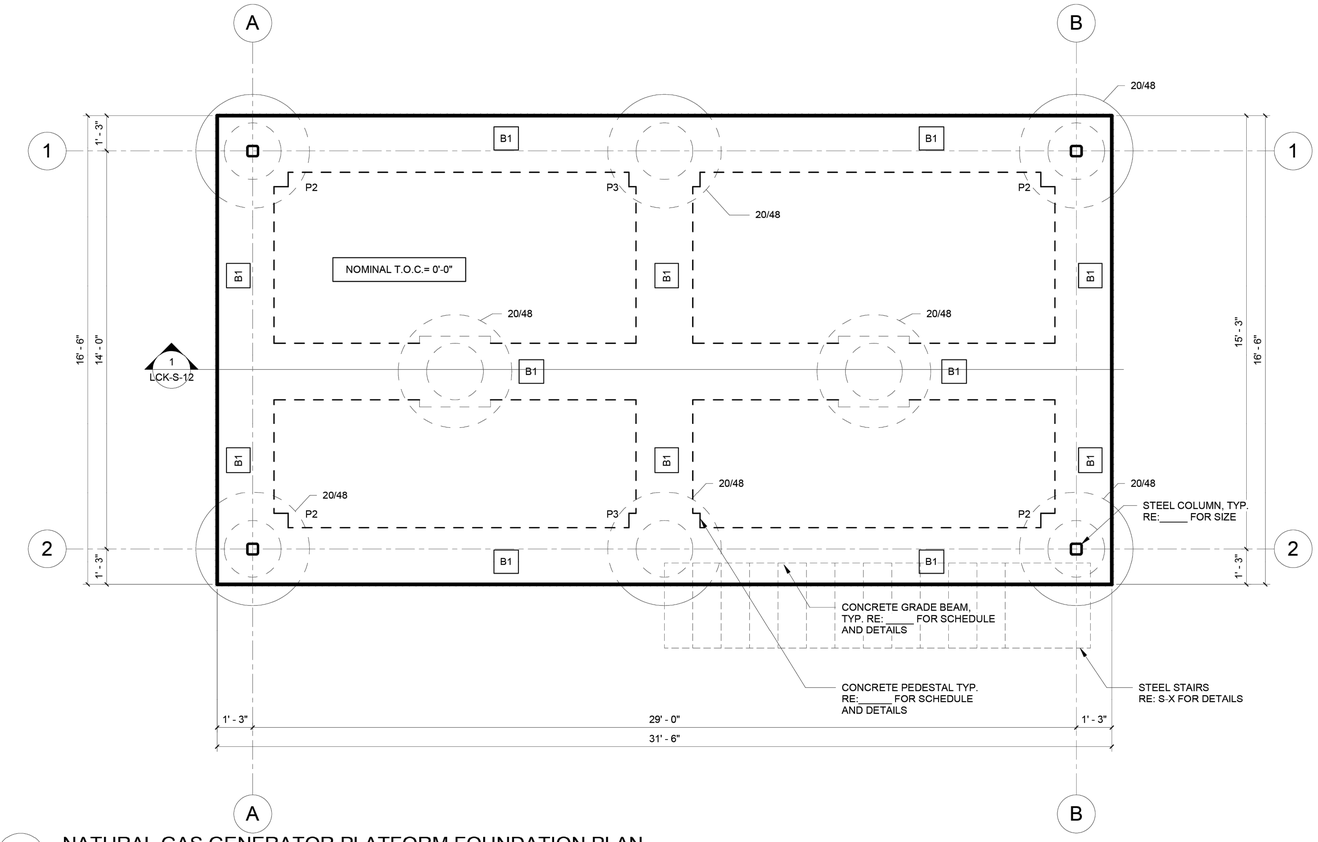

1 NATURAL GAS GENERATOR PLATFORM FOUNDATION PLAN

3/8" = 1'-0"

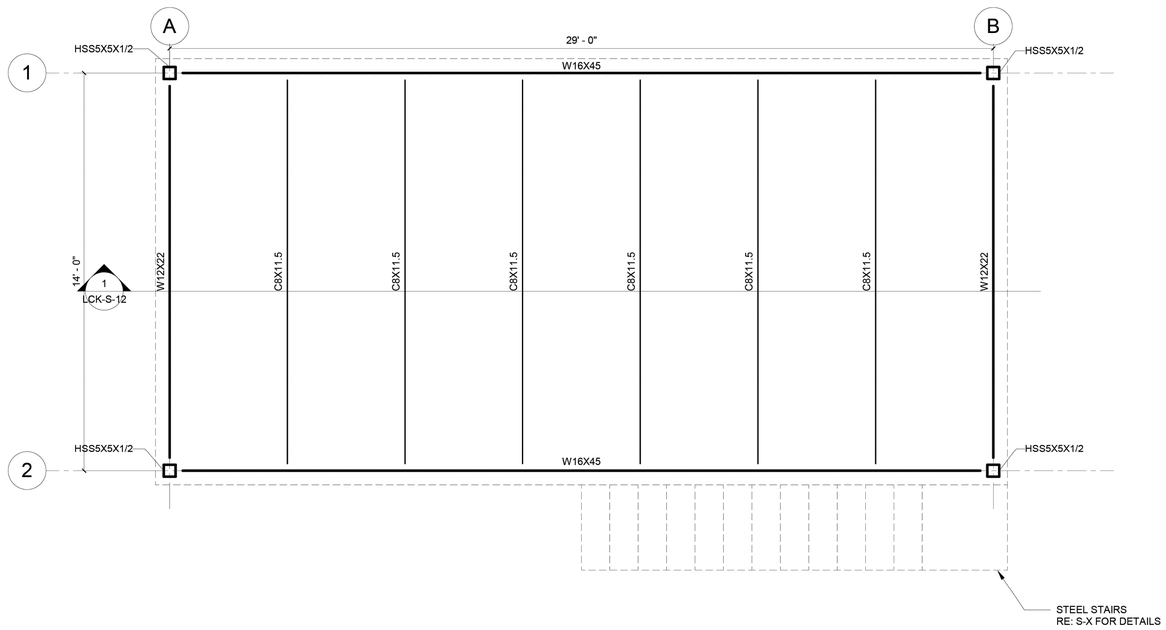

2 NATURAL GAS GENERATOR PLATFORM FRAMING PLAN

3/8" = 1'-0"

PLAN NOTES:

1. CENTER ALL DRILLED SHAFTS UNDER CENTERLINE OF STEEL COLUMN. IF NO STEEL COLUMN IS SHOWN, CENTER DRILLED SHAFTS UNDER CENTER OF GRADE BEAM.

2. ALL STEEL TO BE HOT DIPPED GALVANIZED.

3. FINISH FLOOR ELEVATION = 0'-0". FINISH FLOOR ELEVATION OF NEW STRUCTURAL SLAB TO MATCH ELEVATION OF EXISTING SLAB. RE: CIVIL FOR ACTUAL ELEVATION.

4. "P1" AS SHOWN ON PLAN INDICATES CONCRETE PEDESTAL TYPE P1. THE TOP ELEVATION OF ALL PEDESTALS IS AT -1'-0" TYP U.N.O. REFER TO S-XX FOR DIMENSIONS & REINF.

5. "B1" AS SHOWN ON PLAN INDICATES CONCRETE BEAM TYPE B1. THE TOP ELEVATION OF ALL BEAMS IS AT -1'-0" TYP U.N.O. REFER TO S-XX FOR BEAM SCHEDULE AND DETAILS.

6. " 24/48 " AS SHOWN ON PLAN INDICATES A DRILLED PIER WITH A SHAFT DIAMETER OF 24 INCHES AND A BELL DIAMETER OF 48 INCHES. THE ELEVATION OF ALL STRIGHT SHAFTS IS AT -3'-0" U.N.O. RE: SXX FOR DRILLED PIER SCHEDULE AND DETAILS.

7. REFER TO CIVIL/MEP FOR DIMENSIONS AND LOCATIONS OF ALL SLOPED AND DEPRESSION.

8. (*) INDICATES BEAMS WITH VARYING DEPTHS. RE: SECTION

9. PORTION OF EXISTING SLAB-ON-GRADE TO BE REMOVED. REPLACE WITH NEW STRUCTURAL SLAB AS SHOWN ON SHEET S-7. SEE DETAIL SXX FOR CONNECTION TO EXISTING SLAB, TYPICAL. CONTRACTOR SHALL VERIFY EXISTING CONDITIONS, INCLUDING SLAB THICKNESS, REINFORCING, AND ELEVATIONS, PRIOR TO SAWCUTTING OR REMOVAL. CONTRACTOR IS RESPONSIBLE FOR MAINTAINING STABILITY OF ADJACENT SLAB AND COORDINATING FINAL ELEVATIONS, JOINT ALIGNMENT, AND SAWCUT LOCATIONS IN THE FIELD.

10. EXTENT OF EXISTING SLAB REMOVAL SHALL BE A MINIMUM OF 3'-0" BEYOND THE EDGE OF THE PROPOSED ELECTRICAL BUILDING AND CONCRETE STAIRS, TYPICAL. CONTRACTOR SHALL COORDINATE EXACT REMOVAL LIMITS AND BUILDING LOCATIONS WITH CIVIL DRAWINGS AND VERIFY ALL DIMENSIONS AND LAYOUT IN THE FIELD PRIOR TO DEMOLITION. STRUCTURAL DRAWINGS INDICATE GENERAL INTENT ONLY.

NO.	DATE	REVISION	APP.

P.E. SEAL REQUIRED

PRELIMINARY

SUBJECT TO REVISION

This document is released for informational purposes under the authority of DAVID MOORE P.E. 139405 on 12/11/2025 It is not to be used for regulatory approval, permit, bidding, or construction purposes.

CONCEPT ENGINEERS
TX. FIRM REGISTRATION # F-04417
Structures for the whole community

IDS Engineering Group
13430 NW. Freeway
Suite 700
Houston, Tx. 77040
713.462.3178
TxEng Firm 2726
TxSurv Firm 10110700

CITY OF HOUSTON

HOUSTON PUBLIC WORKS

LIFT STATION RENEWAL AND REPLACEMENT FY 2023

NATURAL GAS GENERATOR PLATFORM FOUNDATION & FRAMING PLAN

WBS NUMBER	FOR CITY OF HOUSTON USE ONLY
R-000267-0179-4	
DRAWING SCALE	
AS NOTED	
CITY OF HOUSTON PM	
NAWARAJ PANTA, P.E.	
SHEET NO. 35 OF 321	

DWG. NO. LCK-S-07

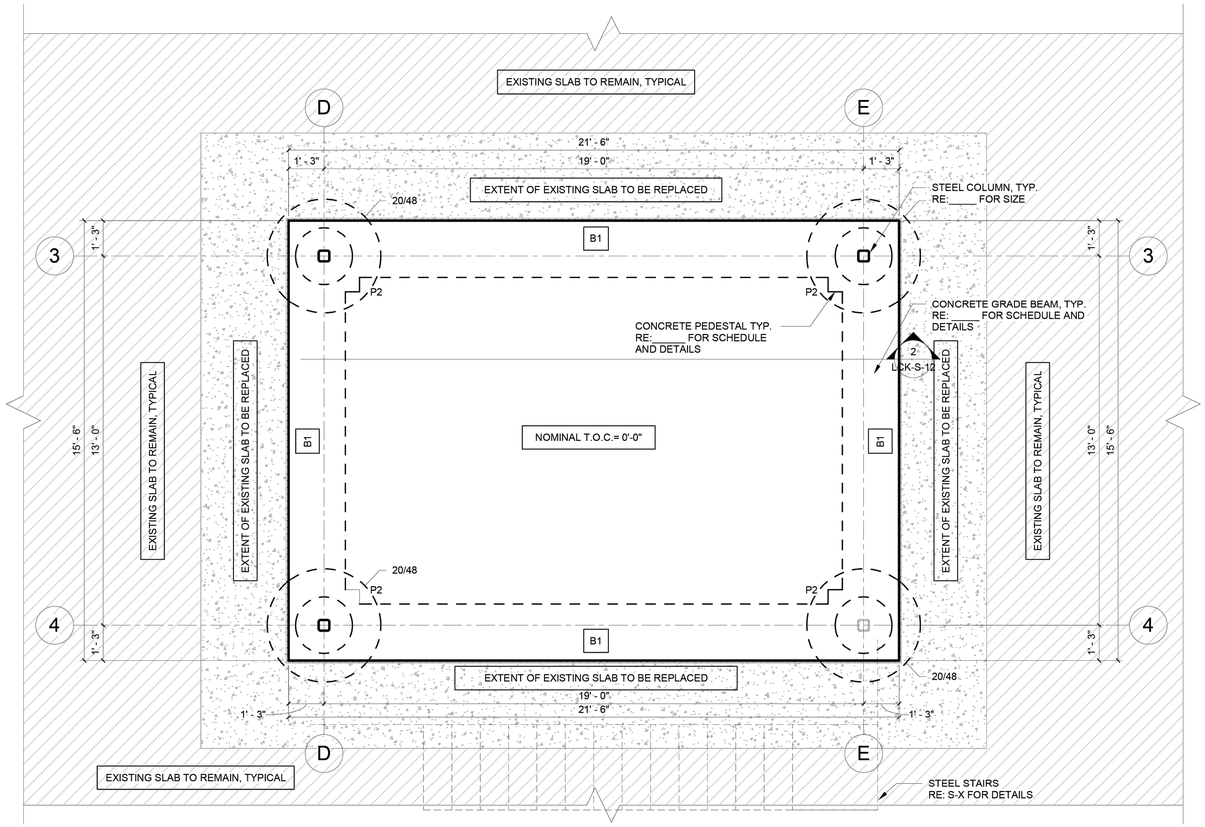

1 ELECTRICAL BUILDING PLATFORM FOUNDATION PLAN

3/8" = 1'-0"

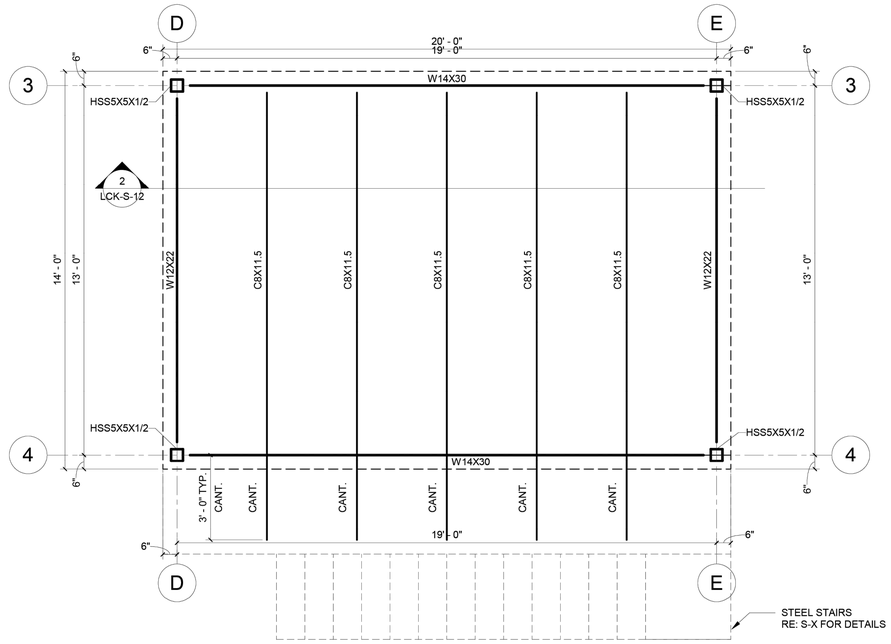

2 ELECTRICAL BUILDING PLATFORM FRAMING PLAN

3/8" = 1'-0"

PLAN NOTES:

1. CENTER ALL DRILLED SHAFTS UNDER CENTERLINE OF STEEL COLUMN. IF NO STEEL COLUMN IS SHOWN, CENTER DRILLED SHAFTS UNDER CENTER OF GRADE BEAM.

2. ALL STEEL TO BE HOT DIPPED GALVANIZED.

3. FINISH FLOOR ELEVATION = 0'-0". FINISH FLOOR ELEVATION OF NEW STRUCTURAL SLAB TO MATCH ELEVATION OF EXISTING SLAB. RE: CIVIL FOR ACTUAL ELEVATION.

4. "P1" AS SHOWN ON PLAN INDICATES CONCRETE PEDESTAL TYPE P1. THE TOP ELEVATION OF ALL PEDESTALS IS AT -1'-0" TYP U.N.O. REFER TO S-XX FOR DIMENSIONS & REINF.

5. "B1" AS SHOWN ON PLAN INDICATES CONCRETE BEAM TYPE B1. THE TOP ELEVATION OF ALL BEAMS IS AT -1'-0" TYP U.N.O. REFER TO S-XX FOR BEAM SCHEDULE AND DETAILS.

6. " 24/48 " AS SHOWN ON PLAN INDICATES A DRILLED PIER WITH A SHAFT DIAMETER OF 24 INCHES AND A BELL DIAMETER OF 48 INCHES. THE ELEVATION OF ALL STRIGHT SHAFTS IS AT -3'-0" U.N.O. RE: SXX FOR DRILLED PIER SCHEDULE AND DETAILS.

7. REFER TO CIVIL/MEP FOR DIMENSIONS AND LOCATIONS OF ALL SLOPED AND DEPRESSION.

8. (*) INDICATES BEAMS WITH VARYING DEPTHS. RE: SECTION

9. PORTION OF EXISTING SLAB-ON-GRADE TO BE REMOVED. REPLACE WITH NEW STRUCTURAL SLAB AS SHOWN ON SHEET S-7. SEE DETAIL SXX FOR CONNECTION TO EXISTING SLAB, TYPICAL. CONTRACTOR SHALL VERIFY EXISTING CONDITIONS, INCLUDING SLAB THICKNESS, REINFORCING, AND ELEVATIONS, PRIOR TO SAWCUTTING OR REMOVAL. CONTRACTOR IS RESPONSIBLE FOR MAINTAINING STABILITY OF ADJACENT SLAB AND COORDINATING FINAL ELEVATIONS, JOINT ALIGNMENT, AND SAWCUT LOCATIONS IN THE FIELD.

10. EXTENT OF EXISTING SLAB REMOVAL SHALL BE A MINIMUM OF 5'-0" BEYOND THE EDGE OF THE PROPOSED ELECTRICAL BUILDING AND CONCRETE STAIRS, TYPICAL. CONTRACTOR SHALL COORDINATE EXACT REMOVAL LIMITS AND BUILDING LOCATIONS WITH CIVIL DRAWINGS AND VERIFY ALL DIMENSIONS AND LAYOUT IN THE FIELD PRIOR TO DEMOLITION. STRUCTURAL DRAWINGS INDICATE GENERAL INTENT ONLY.

NO.	DATE	REVISION	APP.

P.E. SEAL REQUIRED

PRELIMINARY

SUBJECT TO REVISION

This document is released for informational purposes under the authority of DAVID MOORE P.E. 139405 on 12/11/2025 It is not to be used for regulatory approval, permit, bidding, or construction purposes.

CONCEPT ENGINEERS
TX. FIRM REGISTRATION # F-04417
Structures for the whole community

IDS Engineering Group
13430 NW. Freeway
Suite 700
Houston, Tx. 77040
713.462.3178
TxEng Firm 2726
TxSurv Firm 10110700

CITY OF HOUSTON

HOUSTON PUBLIC WORKS

LIFT STATION RENEWAL AND REPLACEMENT FY 2023

ELECTRICAL BUILDING FOUNDATION & FRAMING PLAN

WBS NUMBER	FOR CITY OF HOUSTON USE ONLY
R-000267-0179-4	
DRAWING SCALE	
AS NOTED	
CITY OF HOUSTON PM	
NAWARAJ PANTA, P.E.	

DWG. NO.	SHEET NO.
LCK-S-08	36 OF 321

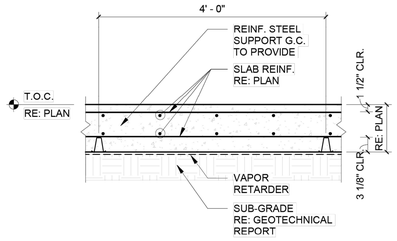

1 TYPICAL SLAB SECTION DETAIL

3/4" = 1'-0"

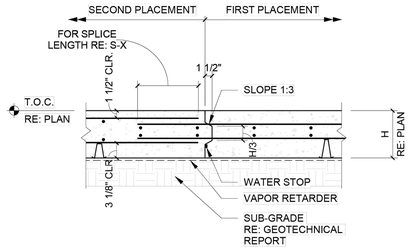

NOTE:
MAXIMUM 80 FEET BETWEEN CONSTRUCTION JOINTS AND 72 HOURS MINIMUM BETWEEN ADJACENT PLACEMENTS.

2 TYPICAL CONSTRUCTION JOINT

3/4" = 1'-0"

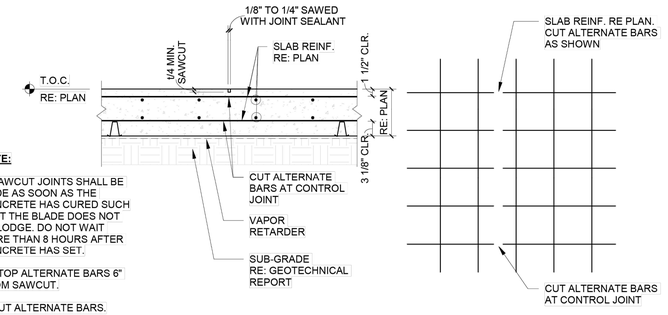

NOTE:

1. SAWCUT JOINTS SHALL BE MADE AS SOON AS THE CONCRETE HAS CURED SUCH THAT THE BLADE DOES NOT DISLODGE. DO NOT WAIT MORE THAN 8 HOURS AFTER CONCRETE HAS SET.
2. STOP ALTERNATE BARS 6" FROM SAWCUT.
3. CUT ALTERNATE BARS.

3 TYPICAL SLAB CONTROL JOINT

3/4" = 1'-0"

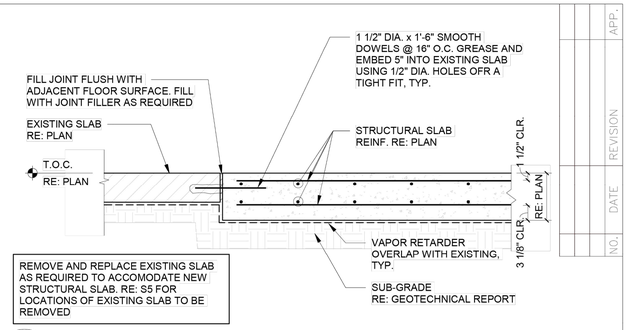

4 TYP NEW TO EXISTING SLAB CONSTRUCTION JOINT

NO SCALE

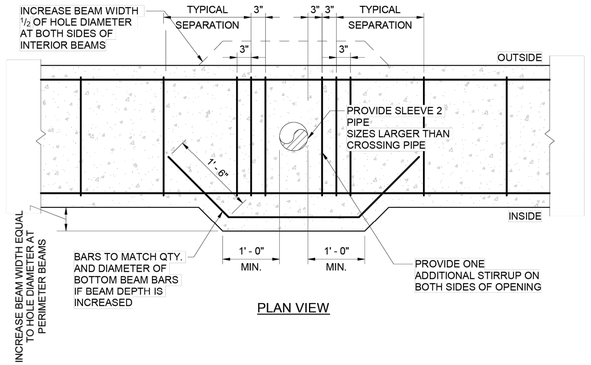

PLAN VIEW

5 VERT. PIPE OPENING LARGER THAN 3" THRU GD. BM.

3/4" = 1'-0"

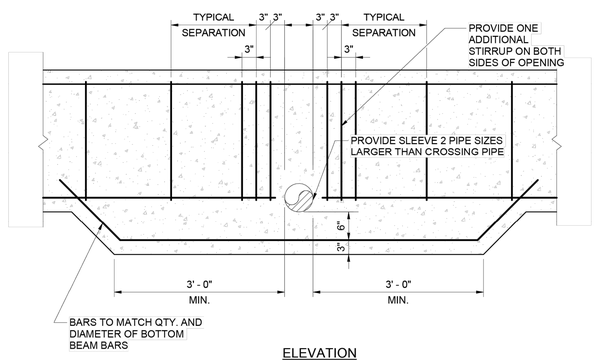

ELEVATION

6 PIPE OPENING THRU GD. BM. IN CONFLICT W/BOT. REINF.

3/4" = 1'-0"

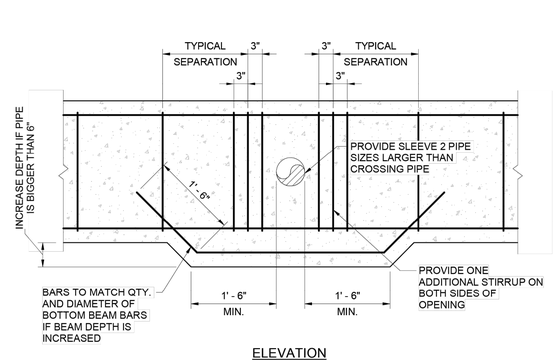

ELEVATION

7 TYP. DETAIL PIPE OPENING THRU GRADE BEAM

3/4" = 1'-0"

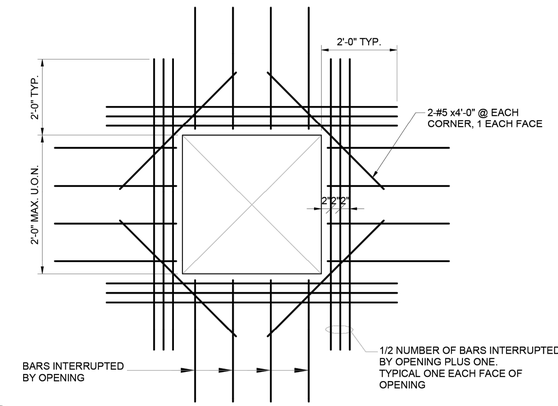

8 TYPICAL ADDITIONAL BAR PLACING DETAIL FOR SLAB

3/4" = 1'-0"

NOTE:

1. GENERAL CONTRACTOR TO COORDINATE REQUIRED SIZE OF BLOCK OUT FOR COLUMNS WITH ARCHITECT AND/OR OWNER.
2. APPLY BLOCK OUT THROUGH FULL DEPTH OF SLAB CONSTRUCTION.
3. BLOCK OUT SHALL BE 3" CLEAR OF EDGE OF BASE PLATE AND STRUCTURAL PLINTH BELOW.
4. COORDINATE CONTROL JOINTS WITH ARCHITECTURAL DRAWINGS.

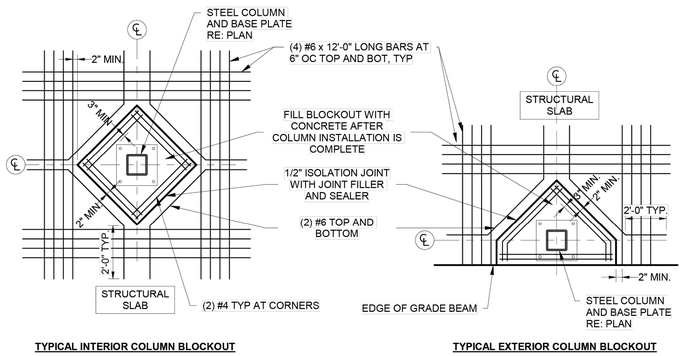

TYPICAL INTERIOR COLUMN BLOCKOUT | **TYPICAL EXTERIOR COLUMN BLOCKOUT**

9 TYPICAL BLOCKOUT DETAIL

1/2" = 1'-0"

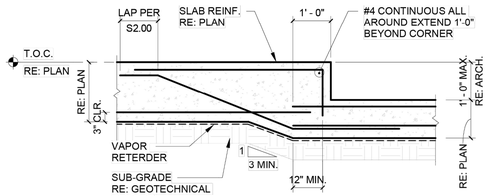

NOTE:
TRANSVERSE REINFORCEMENT NOT SHOWN FOR CLARITY

11 TYP. SLAB DEPRESSION DETAIL

1/2" = 1'-0"

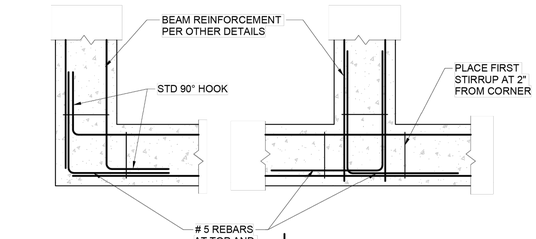

12 TYP. BAR PLACING DETAILS

3/4" = 1'-0"

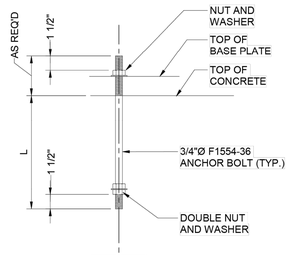

ELEVATION

10 TYPICAL ANCHOR BOLT DETAIL

1 1/2" = 1'-0"

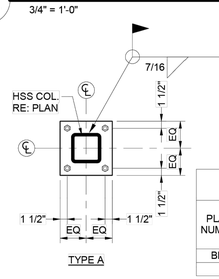

TYPE A

7-BASE PLATE AND ANCHOR BOLT SCHEDULE

PLATE NUMBER	PLATE TYPE	PLATE THICKNESS	PLATE Fy	ANCHOR BOLT TYPE	ANCHOR BOLT DIAMETER	PLATE DIM.	ANCHOR BOLT LENGTH (L)
BP-1	TYPE A	3/4"	36 ksi	TYPE 1	3/4"	12"X12"	18"

13 BASE PLATE DETAILS AND SCHEDULE

3/4" = 1'-0"

APP. | NO. | DATE | REVISION

P.E. SEAL REQUIRED

PRELIMINARY

SUBJECT TO REVISION

This document is released for informational purposes under the authority of DAVID MOORE P.E. 139405 on 12/11/2025 It is not to be used for regulatory approval, permit, bidding, or construction purposes.

CONCEPT ENGINEERS
TX. FIRM REGISTRATION # F-04417
Structures for the whole community

IDS Engineering Group
13430 NW. Freeway
Suite 700
Houston, Tx. 77040
713.462.3178
TxEng Firm 2726
TxSurv Firm 10110700

CITY OF HOUSTON

HOUSTON PUBLIC WORKS

LIFT STATION RENEWAL AND REPLACEMENT FY 2023

TYPICAL FOUNDATION DETAILS

WBS NUMBER	R-000267-0179-4
DRAWING SCALE	AS NOTED
CITY OF HOUSTON PM	NAWARAJ PANTA, P.E.
DWG. NO.	LCK-S-09
SHEET NO.	37 OF 321

FOR CITY OF HOUSTON USE ONLY

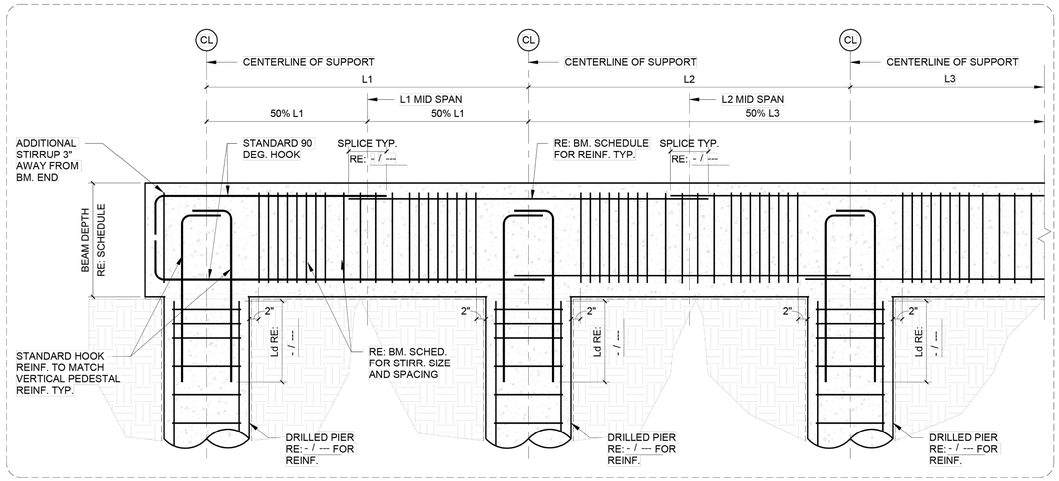

SECTION AT CONTINUOUS BEAM

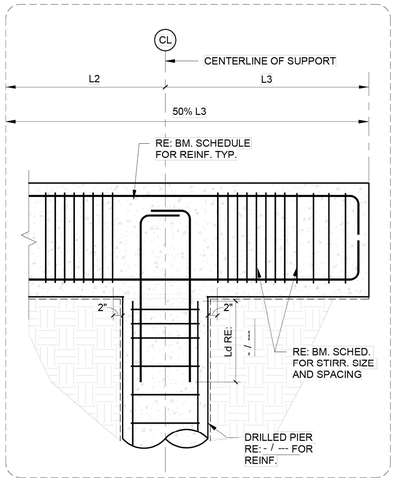

SECTION AT CANTILEVERED BEAM

BEAM SCHEDULE						
TAG	WIDTH	DEPTH	TOP REINFORCEMENT	MIDDLE REINFORCEMENT	BOTTOM REINFORCEMENT	STIRRUPS
B1	2'-0"	2'-0"	(5) #7	-	(5) #7	#4 @ 10" O.C. (3 @ 3" O.C., REST @ 10" O.C.) PROVIDE #4 @ 6" O.C. IN CANTILEVERED END. HOOK LONGITUDINAL BARS IN CANTILEVERED END.
B2	2'-0"	2'-0"	(3) #7	-	(3) #7	#4 @ 10" O.C. (3 @ 3" O.C., REST @ 10" O.C.)
B3	2'-0"	RE: PLAN	(5) #7	(6) #6	(5) #7	#4 @ 10" O.C. (3 @ 3" O.C., REST @ 10" O.C.)

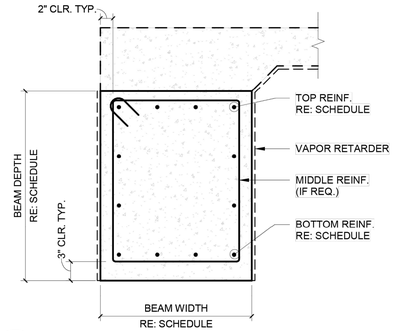

1 TYPICAL REINFORCEMENT SPLICE DETAIL AT BEAM (NEW DETAIL)

3/4" = 1'-0"

2 BEAM SCHEDULE

1" = 1'-0"

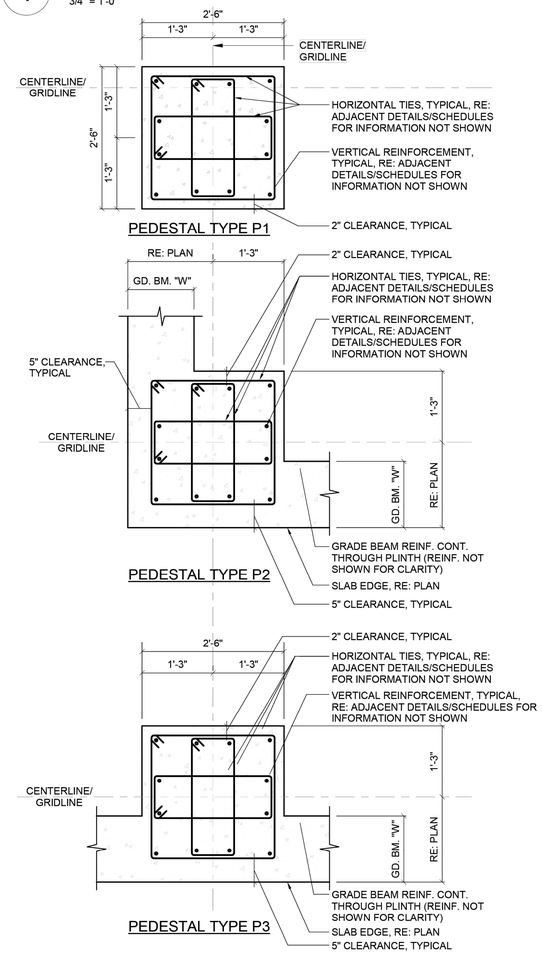

3 TYP. PEDESTAL DETAILS/SCHEDULES

3/4" = 1'-0"

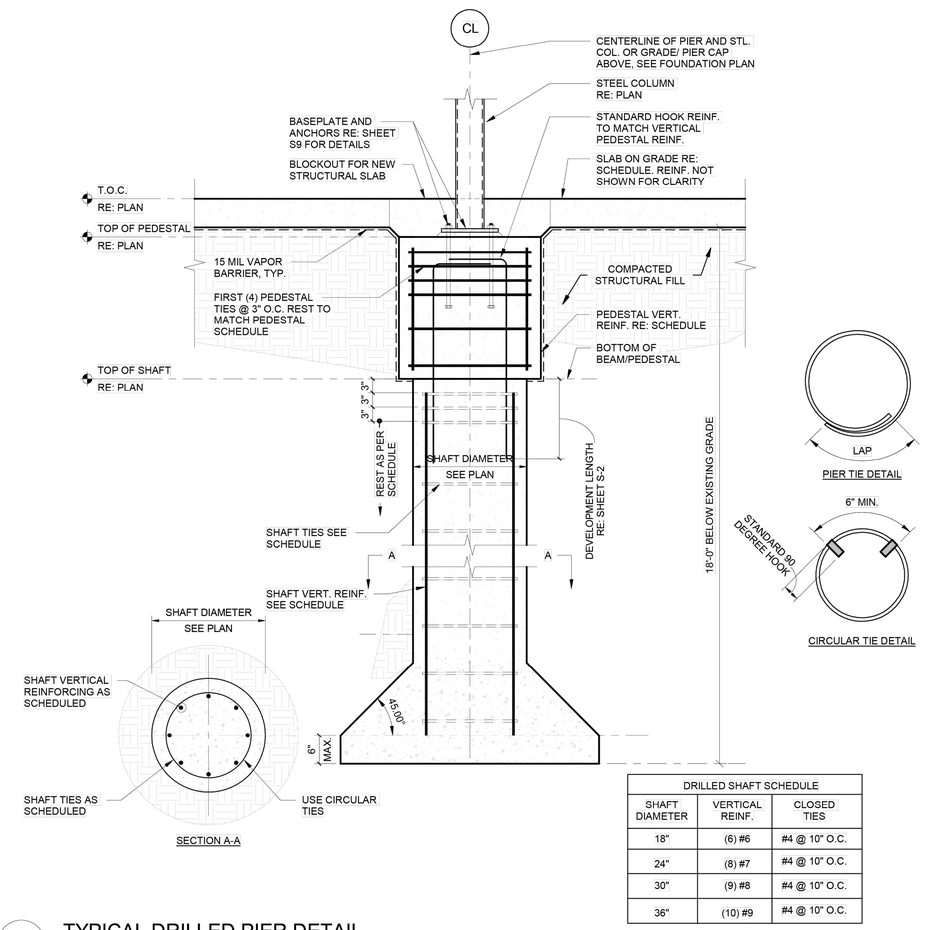

DRILLED SHAFT SCHEDULE		
SHAFT DIAMETER	VERTICAL REINF.	CLOSED TIES
18"	(6) #6	#4 @ 10" O.C.
24"	(8) #7	#4 @ 10" O.C.
30"	(9) #8	#4 @ 10" O.C.
36"	(10) #9	#4 @ 10" O.C.

4 TYPICAL DRILLED PIER DETAIL

3/4" = 1'-0"

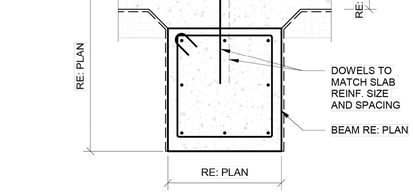

5 SECTION AT INTERIOR BEAM

3/4" = 1'-0"

PEDESTAL SCHEDULE			
TAG	VERT. REINF.	CLOSED TIES	NOTES
TYPE P1	(12) #6	#4 @ 10" O.C.	TOP 4- #4 CLOSED TIES @ 3" O.C., REST @ 10" O.C.
TYPE P2	(12) #6	#4 @ 10" O.C.	TOP 4- #4 CLOSED TIES @ 3" O.C., REST @ 10" O.C.
TYPE P3	(12) #6	#4 @ 10" O.C.	TOP 4- #4 CLOSED TIES @ 3" O.C., REST @ 10" O.C.

6 PEDESTAL SCHEDULE

1" = 1'-0"

APP. | REVISION | DATE | NO.

P.E. SEAL REQUIRED

PRELIMINARY

SUBJECT TO REVISION

This document is released for informational purposes under the authority of DAVID MOORE P.E. 139405 on 12/11/2025 It is not to be used for regulatory approval, permit, bidding, or construction purposes.

CONCEPT ENGINEERS
TX. FIRM REGISTRATION # F-04417
Structures for the whole community

IDS Engineering Group
13430 NW. Freeway
Suite 700
Houston, Tx. 77040
713.462.3178
TxEng Firm 2726
TxSurv Firm 101107700

CITY OF HOUSTON
HOUSTON PUBLIC WORKS

LIFT STATION RENEWAL AND REPLACEMENT FY 2023

FOUNDATION DETAILS & SCHEDULES

WBS NUMBER	R-000267-0179-4
DRAWING SCALE	AS NOTED
CITY OF HOUSTON PM	NAWARAJ PANTA, P.E.
DWG. NO.	LCK-S-10
SHEET NO.	38 OF 321

FOR CITY OF HOUSTON USE ONLY

SINGLE SHEAR PLATE CONNECTION SCHEDULE					
BEAM	BOLTS	DIAMETER	GRADE	PLATE	WELD
W6x	2	5/8"	A325	1/4"	3/16" FILLET
W8x	2	3/4"	A325	1/4"	3/16" FILLET
W10x	3	3/4"	A325	1/4"	3/16" FILLET
W12x	3	7/8"	A325	5/16"	1/4" FILLET
W14x	3	7/8"	A325	5/16"	1/4" FILLET
W16x	4	7/8"	A325	5/16"	1/4" FILLET
W18x	5	7/8"	A325	5/16"	1/4" FILLET
W21x	6	7/8"	A325	3/8"	5/16" FILLET
W24x	6	7/8"	A325	3/8"	5/16" FILLET

1 CONNECTION SCHEDULE
3/4" = 1'-0"

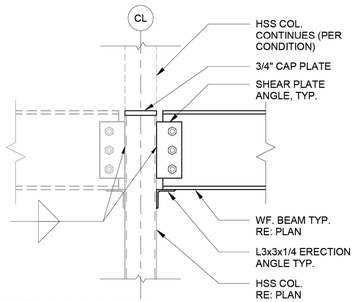

NOTES:
1. PROVIDE NUMBER OF REQUIRED BOLTS TO SUPPORT REACTION.
2. RE: PLAN DOUBLE / SINGLE CONDITIONS.

2 TYP. BM. TO COL. SHEAR CONNECTION
1" = 1'-0"

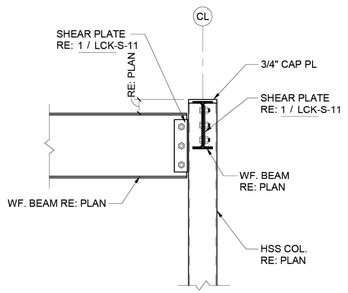

3 BM./COL. CONNECTION DET.
3/4" = 1'-0"

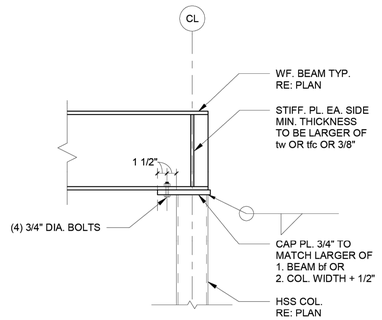

4 TYP. BEAM OVER COLUMN CONNECTION
1" = 1'-0"

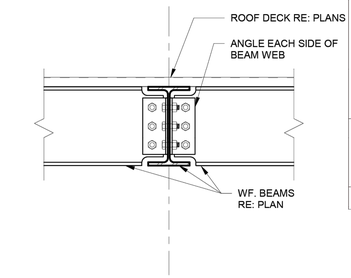

NOTES:
1. SEE SCHEDULE FOR MORE INFORMATION.

5 TYP. BEAM TO BEAM CONNECTION
1" = 1'-0"

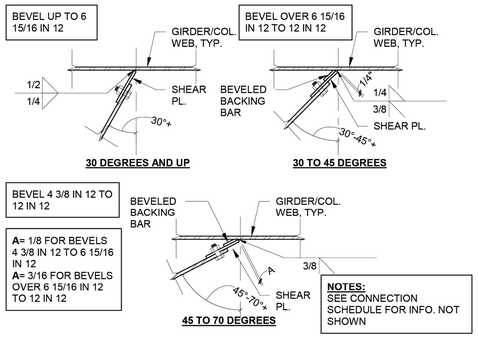

6 SKEWED BEAM CONNECTIONS
1" = 1'-0"

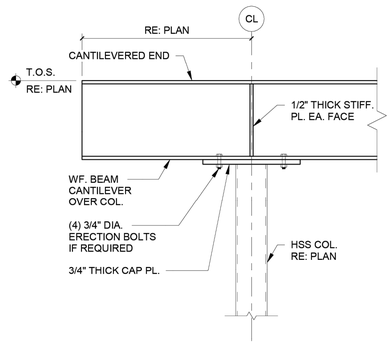

7 TYP. CANTILEVERED STL. BM.
1" = 1'-0"

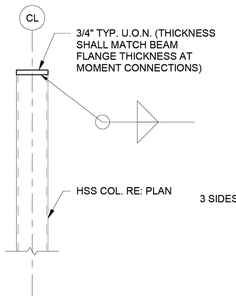

8 TYP. HSS COLUMN CAP PLATE
1" = 1'-0"

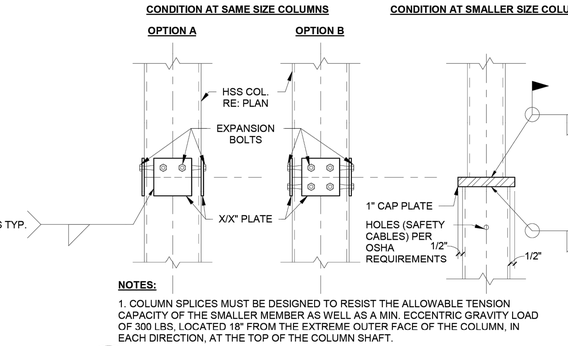

NOTES:
1. COLUMN SPLICES MUST BE DESIGNED TO RESIST THE ALLOWABLE TENSION CAPACITY OF THE SMALLER MEMBER AS WELL AS A MIN. ECCENTRIC GRAVITY LOAD OF 300 LBS, LOCATED 18" FROM THE EXTREME OUTER FACE OF THE COLUMN, IN EACH DIRECTION, AT THE TOP OF THE COLUMN SHAFT.

9 TYP. HSS COLUMN SPLICE DETAILS
1 1/2" = 1'-0"

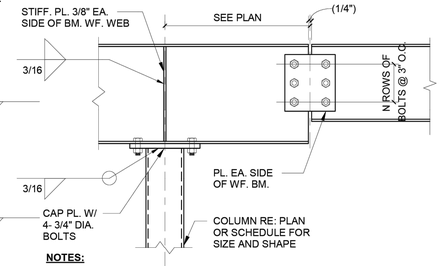

NOTES:
1. BOLTS ARE ASTM A325N.
2. BEAM SIZE IS THE SUPPORTED BEAM.
3. SHORT-SLOTTED HOLES SHALL NOT BE USED FOR PRIMARY FRAME CONNECTIONS. SEE SPECIFICATIONS FOR ADDITIONAL INFORMATION.
4. RE: CONNECTION SHEDULE

10 TYP. BEAM. SPLICE CONNX.
1" = 1'-0"

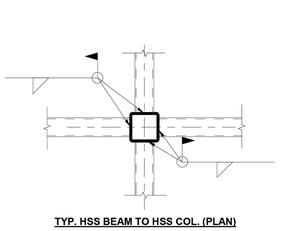

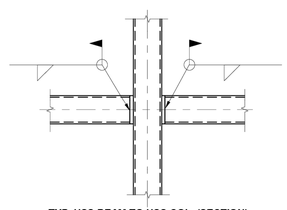

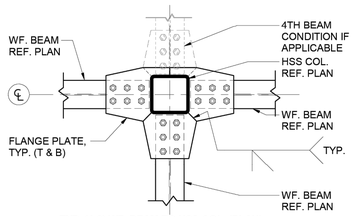

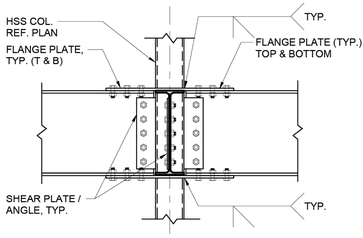

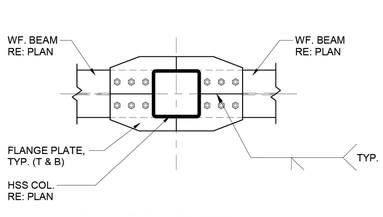

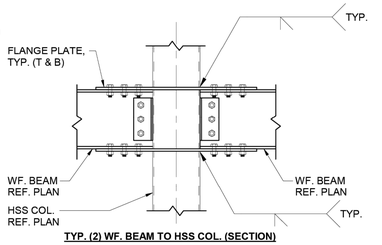

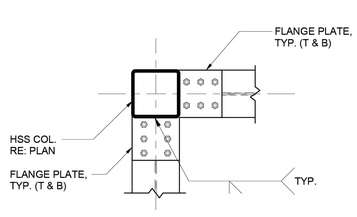

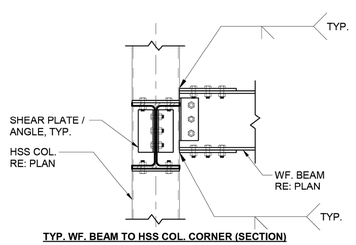

NOTES:
1. BOLTS IN WEB CONNECTION SHALLBE SNUG TIGHTENED PRIOR TO WELDING OF FLANGES.
2. SLIP-CRITICAL BOLTED CONNECTION IN WEB USING A325 BOLTS IN HORIZONTAL SHORT-SLOTTED HOLES U.N.O. RESISTANCE BY BOLTS TO SHEAR SHALL BE BY FRICTION, PROPORTIONED USING THE STANDARD HOLE VALUE ON A CLASS "A" SURFACE.
3. REFER TO SPECIFICATIONS FOR CONNECTION DESIGN CRITERIA.
4. PROVIDE PREDESIGNED SHEAR CONNECTIONS AS SHOWN IN AISC LRFD MANUAL WHERE APPLICABLE.
5. IF MOMENT IS SHOWN ON DRAWINGS, PARTIAL PENETRATION WELD TO DEVELOP MOMENT CAN BE USED IN LIEU OF CJP WELD. FOR THIS CASE, WELD SHALL BE REQUIRED TO DEVELOP THE BEAM FLANGE FORCE COMPUTED AS FOLLOWS: Pu= (Mu)/(0.95D). WHERE: Mu= DESIGN MOMENT (KIP-IN). D= BEAM DEPTH (INCHES). Pu= BEAM FLANGE FORCE (KIPS).

11 TYP. MOMENT CONNECTIONS
3/4" = 1'-0"

NO.	DATE	REVISION	APP.

P.E. SEAL REQUIRED

PRELIMINARY

SUBJECT TO REVISION

This document is released for informational purposes under the authority of DAVID MOORE P.E. 139405 on 12/11/2025 It is not to be used for regulatory approval, permit, bidding, or construction purposes.

CONCEPT ENGINEERS
TX. FIRM REGISTRATION # F-04417
Structures for the whole community

IDS Engineering Group
13430 NW. Freeway
Suite 700
Houston, Tx. 77040
713.462.3178
TxEng Firm 2726
TxSurv Firm 10110700

CITY OF HOUSTON
HOUSTON PUBLIC WORKS

LIFT STATION RENEWAL AND REPLACEMENT FY 2023

TYPICAL STEEL DETAILS

WBS NUMBER	FOR CITY OF HOUSTON USE ONLY
R-000267-0179-4	
DRAWING SCALE	
AS NOTED	
CITY OF HOUSTON PM	
NAWARAJ PANTA, P.E.	
DWG. NO. LCK-S-11	SHEET NO. 39 OF 321

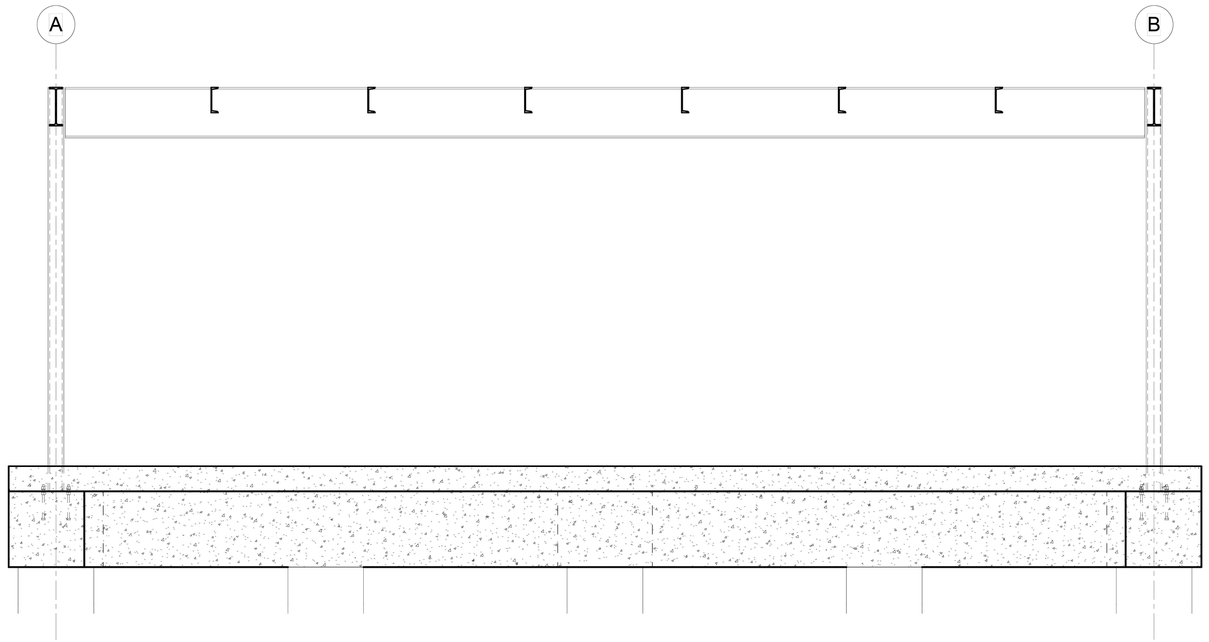

1 NATURAL GAS GENERATOR SECTION

1/2" = 1'-0"

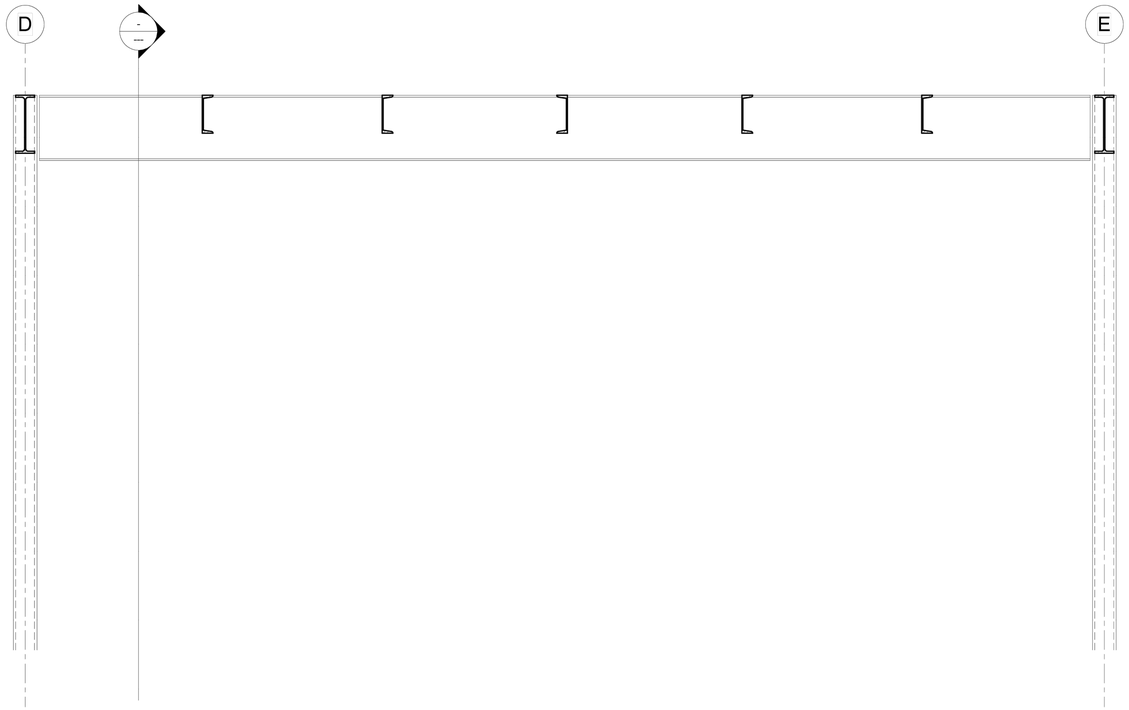

2 ELECTRICAL BUILDING SECTION

3/4" = 1'-0"

NO.	DATE	REVISION	APP.

P.E. SEAL REQUIRED

PRELIMINARY

SUBJECT TO REVISION

This document is released for informational purposes under the authority of DAVID MOORE P.E. 139405 on 12/11/2025 It is not to be used for regulatory approval, permit, bidding, or construction purposes.

CONCEPT ENGINEERS

TX. FIRM REGISTRATION # F-04417

Structures for the whole community

IDS Engineering Group

13430 NW. Freeway
Suite 700
Houston, Tx. 77040
713.462.3178

TxEng Firm 2726
TxSurv Firm 10110700

CITY OF HOUSTON

HOUSTON PUBLIC WORKS

LIFT STATION RENEWAL AND REPLACEMENT FY 2023

FRAMING DETAILS

WBS NUMBER	FOR CITY OF HOUSTON USE ONLY
R-000267-0179-4	
DRAWING SCALE	
AS NOTED	
CITY OF HOUSTON PM	
NAWARAJ PANTA, P.E.	

DWG. NO.	SHEET NO.
LCK-S-12	40 OF 321

PLOTTED: 12/11/2025 8:22 PM

FILE PATH: O:\H8108_Lift Station Rehabilitation And Reconstruction (IDS)\6 Drawings\Electrical\Working\Lockwood\H8108_LCK-E-01.dwg

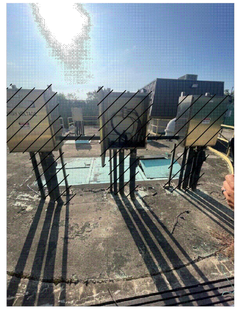

EXISTING PUMP J-BOX
NO.1,NO.2,NO.3,NO.4,NO.5,NO.6

PHOTOGRAPH A - 2
NTS

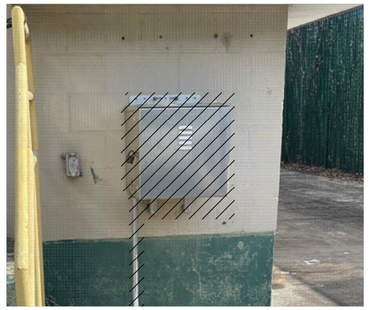

EXISTING WIMAX
BOX

PHOTOGRAPH B - 3
NTS



EXISTING CAMERA
POLE

PHOTOGRAPH C - 4
NTS



EXISTING WIMAX
POLE

PHOTOGRAPH D - 5
NTS

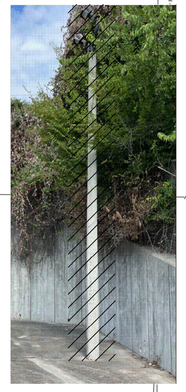

EXISTING LIGHT
POLE

PHOTOGRAPH E - 1
NTS

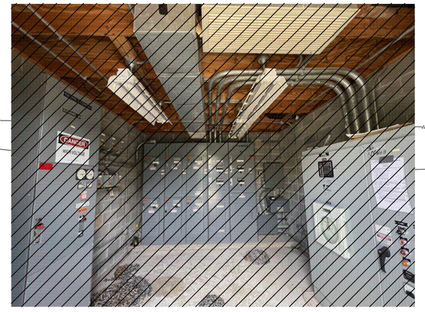

EXISTING ELECTRICAL EQUIPMENT
(IN EXISTING ELECTRICAL BUILDING)

PHOTOGRAPH E - 6
NTS

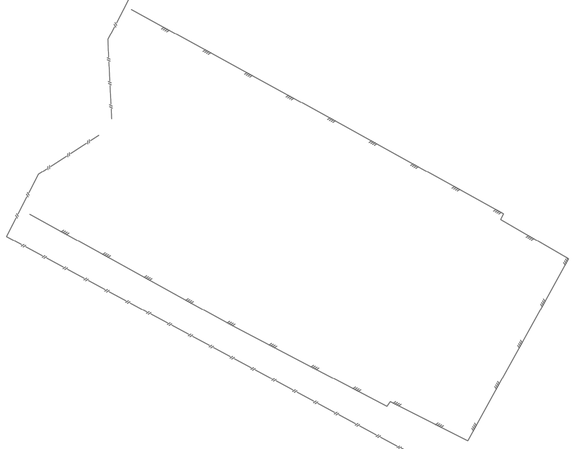

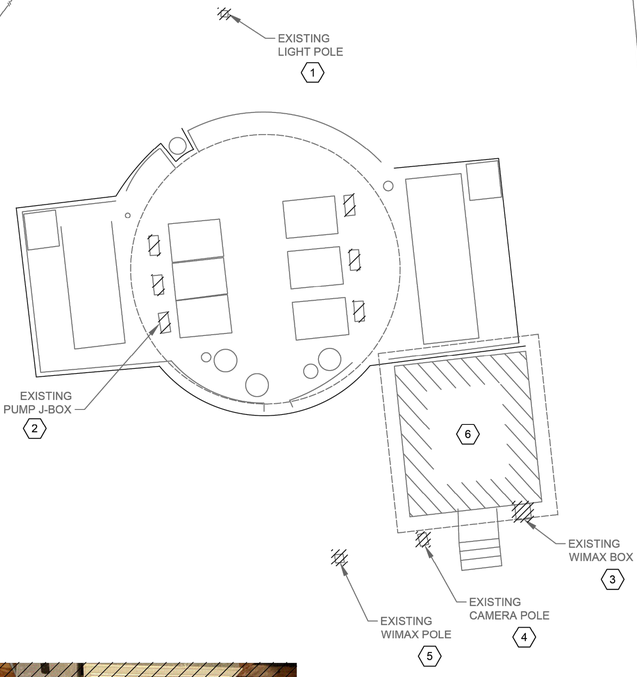

LOCKWOOD ELECTRICAL
EXISTING SITE
PLAN
1"= 8'-0"

NOTES BY SYMBOL "⟨#⟩":

1. EXISTING LIGHT POLE TO BE DEMOLISHED AND REMOVED.
2. EXISTING PUMP J-BOXES FOR NO.1, NO.2, NO.3, NO.4, NO.5, NO.6 PUMPS TO BE DEMOLISHED AND REMOVED.
3. EXISTING WIMAX BOX TO BE DEMOLISHED AND REMOVED.
4. EXISTING CAMERA POLE TO BE DEMOLISHED AND REMOVED.
5. EXISTING WIMAX POLE TO BE DEMOLISHED AND REMOVED.
6. EXISTING MCC, CONTROL PANEL, POWER FACTOR CORRECTION CAPACITORS, SWITCHBOARD, LIGHTING PANEL, LIGHTING TRANSFORMER, LIGHTING, AND ASSOCIATED CONDUITS AND WIRES IN ELECTRICAL BUILDING TO BE DEMOLISHED AND REMOVED.

NO.	DATE	REVISION	APP.

FOR INTERIM REVIEW
ONLY NOT INTENDED FOR
PERMIT, BIDDING OR
CONSTRUCTION PURPOSES.
ENGINEER:
HOSS FOROUZAN
P.E. SERIAL NO.77748
12/15/2025

GAI
Gupta & Associates, Inc.
CONSULTING ENGINEERING
Registration No. F-2593
302 Dennis St.,
Houston, Texas 77006
Tel: 713-636-2936
Fax: 713-636-2987
email: hforouzan@gaiconsulting.com

IDS Engineering Group
13430 NW. Freeway
Suite 700
Houston, Tx. 77040
713.462.3178
TxEng Firm 2726
TxSurv Firm 10110700

CITY OF HOUSTON
HOUSTON PUBLIC WORKS

LIFT STATION RENEWAL
AND REPLACEMENT FY 2023

LOCKWOOD LIFT STATION
EXISTING SITE PLAN

WBS NUMBER	FOR CITY OF HOUSTON USE ONLY
R-000267-0179-4	
DRAWING SCALE	
HORIZ: VERT:	
CITY OF HOUSTON PM	
NAWARAJ PANTA, P.E.	
SHEET NO. 41 OF 321	

DWG. NO. LCK-E-1

IDS JOB No. 0057-085-00

PLOTTED: 12/11/2025 8:23 PM

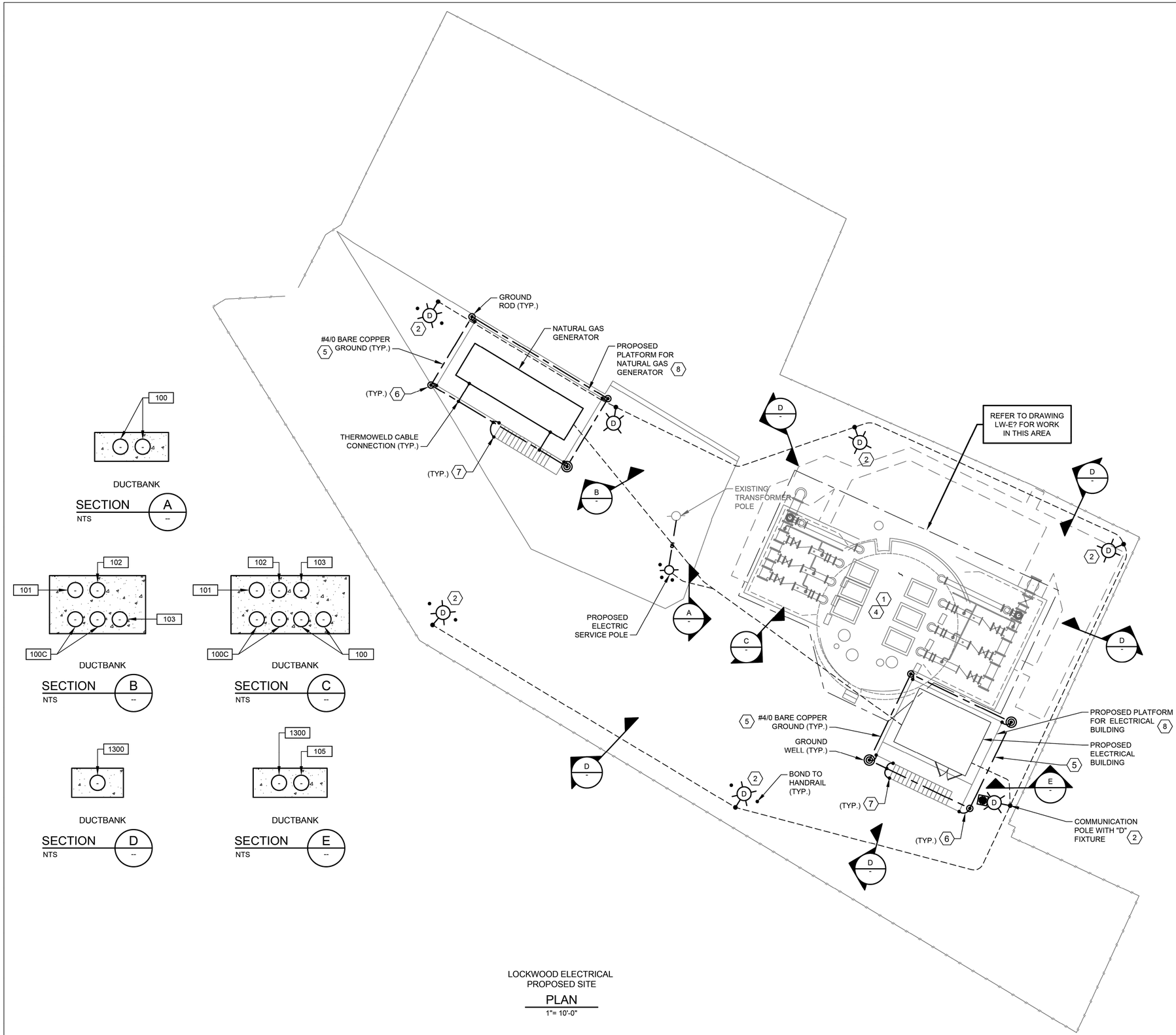

LOCKWOOD ELECTRICAL
PROPOSED SITE
PLAN
1"= 10'-0"

DUCTBANK
SECTION A
NTS

DUCTBANK
SECTION B
NTS

DUCTBANK
SECTION C
NTS

DUCTBANK
SECTION D
NTS

DUCTBANK
SECTION E
NTS

NOTES:

1. THE ELECTRICAL INSTALLATION IN THE WET WELL SHALL BE EXPLOSION PROOF, IN ACCORDANCE WITH THE NATIONAL ELECTRICAL CODE FOR CLASS I, DIVISION 1 LOCATIONS.
2. YARD LIGHT CONTROLLED BY LIGHTING SWITCH.
3. TYPE "B" FIXTURE TO BE INSTALLED ON THE POLE PROVIDING WIRES FOR THE "B" LIGHT.
4. INSIDE WETWELL RATED NEMA CLASS , DIV. 1, OUTSIDE ABOVE GROUND, AROUND WETWELL RATED CLASS 1, DIV. 2 ACCORDING TO NFPA 820.
5. GROUNDING LOOP SHALL BE BURIED 30" BELOW FINISHED GRADE.
6. #4/0 BARE COPPER GROUND TO BE BONDED TO PLATFORM STRUCTURAL STEEL.
7. #4/0 BARE COPPER GROUND TO BE BONDED TO HANDRAIL.
8. REFER TO THE ASSOCIATED STRUCTURE DRAWINGS FOR THE PLATFORM DETAILS.

NO.	DATE	REVISION	APP.

GENERAL NOTES:

1. NO ELECTRICAL MATERIAL, APPARATUS, DEVICES, APPLIANCES, FIXTURES, OR EQUIPMENT SHALL BE SOLD OR INSTALLED IN THE CITY UNLESS THEY ARE IN CONFORMANCE WITH THE PROVISIONS OF SECTION 508 CITY OF HOUSTON ELECTRICAL CODE, THE LAWS OF THE STATE OF TEXAS AND ANY APPLICABLE RULES AND REGULATIONS ISSUED UNDER THE AUTHORITY OF THE STATE STATUES. THE MAKER'S NAME, TRADEMARK, OR OTHER IDENTIFICATION SYMBOL SHALL BE PLACED ON ALL ELECTRICAL MATERIALS, APPARATUS, DEVICES, APPLIANCES, FIXTURES, AND EQUIPMENT USED OR INSTALLED UNDER THE PROVISIONS OF THIS CODE. ALL ELECTRICAL MATERIALS AND EQUIPMENT SHALL BE LISTED AND LABELED FOR THE INTENDED USE AND SHALL BE INCLUDED IN A LIST PUBLISHED BY AN APPROVAL AGENCY.

FOR INTERIM REVIEW
ONLY NOT INTENDED FOR
PERMIT, BIDDING OR
CONSTRUCTION PURPOSES.
ENGINEER:
HOSS FOROUZAN
P.E. SERIAL NO.77748
12/15/2025

GAI
Gupta & Associates, Inc.
CONSULTING ENGINEERING
Registration No. F-2593
302 Dennis St.,
Houston, Texas 77006
Tel: 713-636-2936
Fax: 713-636-2987
email: hforouzan@gaiconsulting.com

IDS Engineering Group
13430 NW. Freeway
Suite 700
Houston, Tx. 77040
713.462.3178
TxEng Firm 2726
TxSurv Firm 10110700

CITY OF HOUSTON
HOUSTON PUBLIC WORKS

LIFT STATION RENEWAL
AND REPLACEMENT FY 2023

LOCKWOOD LIFT STATION PROPOSED SITE PLAN

WBS NUMBER	FOR CITY OF HOUSTON USE ONLY
R-000267-0179-4	
DRAWING SCALE	
HORIZ: VERT:	
CITY OF HOUSTON PM	
NAWARAJ PANTA, P.E.	
SHEET NO. 42 OF 321	

DWG. NO.
LCK-E-2

IDS JOB No. 0057-085-00

FILE PATH: O:\H8108_Lift Station Rehabilitation And Reconstruction (IDS)\6 Drawings\Electrical\Working\Lockwood\H8108_LCK-E-02.dwg

PLOTTED: 12/11/2025 8:23 PM

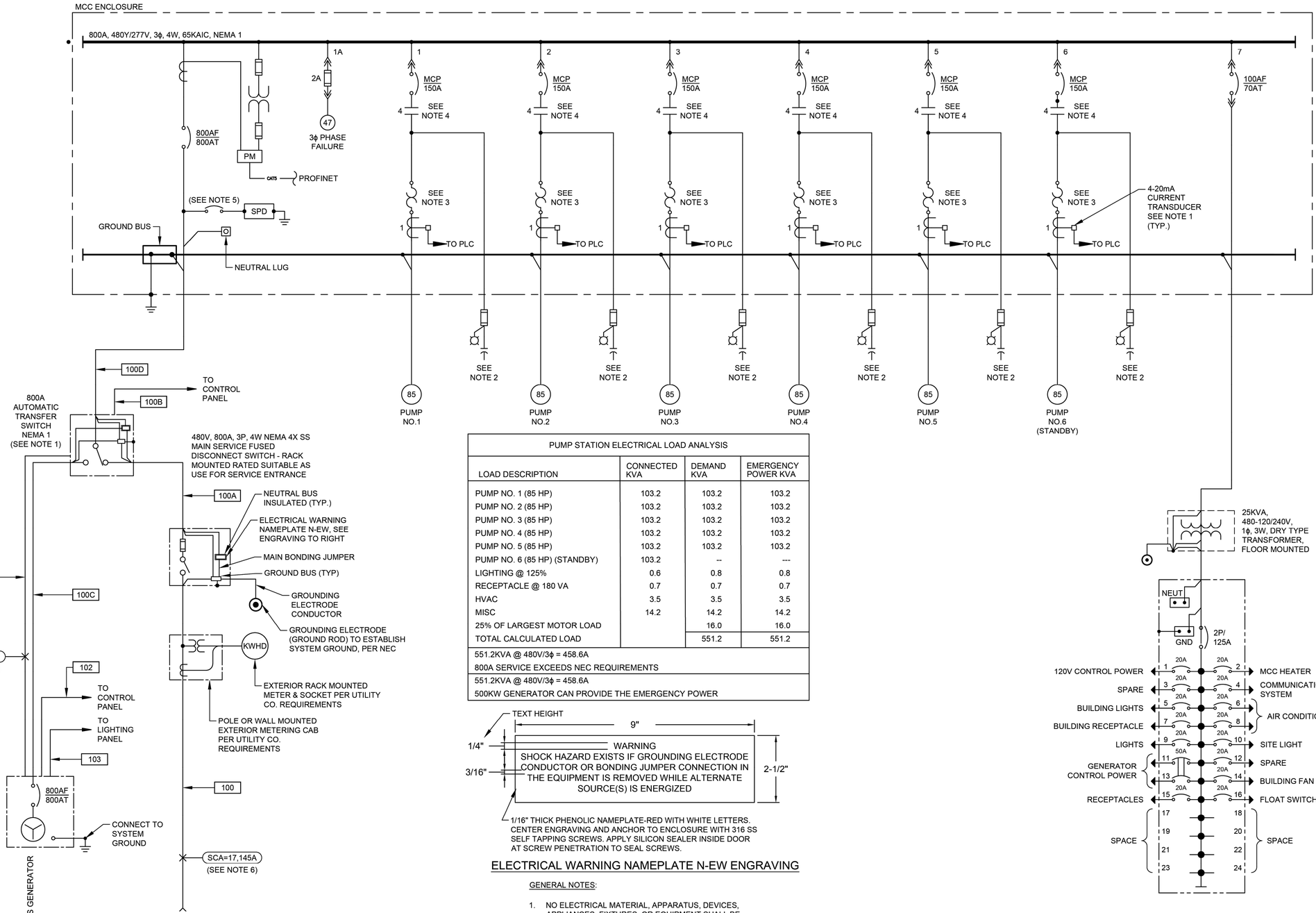

PUMP STATION ELECTRICAL LOAD ANALYSIS			
LOAD DESCRIPTION	CONNECTED KVA	DEMAND KVA	EMERGENCY POWER KVA
PUMP NO. 1 (85 HP)	103.2	103.2	103.2
PUMP NO. 2 (85 HP)	103.2	103.2	103.2
PUMP NO. 3 (85 HP)	103.2	103.2	103.2
PUMP NO. 4 (85 HP)	103.2	103.2	103.2
PUMP NO. 5 (85 HP)	103.2	103.2	103.2
PUMP NO. 6 (85 HP) (STANDBY)	103.2	--	---
LIGHTING @ 125%	0.6	0.8	0.8
RECEPTACLE @ 180 VA	0.7	0.7	0.7
HVAC	3.5	3.5	3.5
MISC	14.2	14.2	14.2
25% OF LARGEST MOTOR LOAD		16.0	16.0
TOTAL CALCULATED LOAD		551.2	551.2
551.2KVA @ 480V/3ϕ = 458.6A			
800A SERVICE EXCEEDS NEC REQUIREMENTS			
551.2KVA @ 480V/3ϕ = 458.6A			
500KW GENERATOR CAN PROVIDE THE EMERGENCY POWER			

1/16" THICK PHENOLIC NAMEPLATE-RED WITH WHITE LETTERS. CENTER ENGRAVING AND ANCHOR TO ENCLOSURE WITH 316 SS SELF TAPPING SCREWS. APPLY SILICON SEALER INSIDE DOOR AT SCREW PENETRATION TO SEAL SCREWS.

ELECTRICAL WARNING NAMEPLATE N-EW ENGRAVING

GENERAL NOTES:

1. NO ELECTRICAL MATERIAL, APPARATUS, DEVICES, APPLIANCES, FIXTURES, OR EQUIPMENT SHALL BE SOLD OR INSTALLED IN THE CITY UNLESS THEY ARE IN CONFORMANCE WITH THE PROVISIONS OF SECTION 508 CITY OF HOUSTON ELECTRICAL CODE, THE LAWS OF THE STATE OF TEXAS AND ANY APPLICABLE RULES AND REGULATIONS ISSUED UNDER THE AUTHORITY OF THE STATE STATUES. THE MAKER'S NAME, TRADEMARK, OR OTHER IDENTIFICATION SYMBOL SHALL BE PLACED ON ALL ELECTRICAL MATERIALS, APPARATUS, DEVICES, APPLIANCES, FIXTURES, AND EQUIPMENT USED OR INSTALLED UNDER THE PROVISIONS OF THIS CODE. ALL ELECTRICAL MATERIALS AND EQUIPMENT SHALL BE LISTED AND LABELED FOR THE INTENDED USE AND SHALL BE INCLUDED IN A LIST PUBLISHED BY AN APPROVAL AGENCY.

NOTES:

1. PROVIDE 5A PRIMARY TO 4-20mA CURRENT TRANSDUCER.
2. CONTRACTOR TO COORDINATE POWER FACTOR CORRECTION CAPACITOR SIZE WITH PUMP MANUFACTURER. MINIMUM 95% POWER FACTOR CORRECTION AT FULL LOAD. MOUNT CAPACITORS EXTERNAL ABOVE MCC ON THE APPROPRIATE SECTION.
3. COMBINATION OF CT AND OVERLOAD RELAY AS REQUIRED.
4. STARTER NEMA SIZE 3 OR GREATER SHALL BE VACUUM TYPE.
5. PROVIDE BREAKER ACCORDING TO MANUFACTURER'S REQUIREMENTS.
6. POINT TO POINT METHOD IS USED FOR SHORT CIRCUIT CURRENT CALCULATION.
7. CONTRACTOR SHALL PROVIDE A PERMANENTLY AFFIXED LABEL (2" X 3") SHOWING THE AVAILABLE FAULT CURRENT AND CALCULATION DATE. THE LABEL SHALL BE BLUE LETTERING ON A CONTRASTING BACKGROUND.
8. THE INSULATION TYPES OF ALL ELECTRICAL CONDUCTOS USED IN THE PROJECT HAVE BEEN SPECIFIED IN ELECTRICAL SPECIFICATIONS (16120, 16121, AND 16122). THE TYPES OF CONDUITS USED IN THE PROJECT HAS BEEN SPECIFIED IN ELECTRICAL SPECIFICATIONS 16111.
9. THE INFORMATION IS PROVIDED BY GENERATOR MANUFACTURER (CUMMINS).
10. REFER TO INSTRUMENTATION DRAWINGS LCK-I-11, LCK-I-12, LCK-I-13, LCK-I-14, LCK-I-15, LCK-I-16 FOR PUMP CONTROL SCHEMATIC.

NO.	DATE	REVISION	APP.

FOR INTERIM REVIEW
ONLY NOT INTENDED FOR
PERMIT, BIDDING OR
CONSTRUCTION PURPOSES.
ENGINEER:
HOSS FOROUZAN
P.E. SERIAL NO.77748
12/15/2025

GAI
Gupta & Associates, Inc.
CONSULTING ENGINEERING
Registration No. F-2593
302 Dennis St.,
Houston, Texas 77006
Tel: 713-636-2936
Fax: 713-636-2987
email: hforouzan@gaiconsulting.com

IDS Engineering Group
13430 NW. Freeway
Suite 700
Houston, Tx. 77040
713.462.3178
TxEng Firm 2726
TxSurv Firm 10110700

CITY OF HOUSTON
HOUSTON PUBLIC WORKS

LIFT STATION RENEWAL AND REPLACEMENT FY 2023

LOCKWOOD LIFT STATION SINGLE LINE DIAGRAM

WBS NUMBER	FOR CITY OF HOUSTON USE ONLY
R-000267-0179-4	
DRAWING SCALE	
HORIZ: VERT:	
CITY OF HOUSTON PM	
NAWARAJ PANTA, P.E.	
SHEET NO. 43 OF 321	

DWG. NO. LCK-E-3

IDS JOB No. 0057-085-00

FILE PATH: O:\H8108_Lift Station Rehabilitation And Reconstruction (IDS)\6 Drawings\Electrical\Working\Lockwood\H8108_LCK-E-03.dwg

PLOTTED: 12/11/2025 8:23 PM

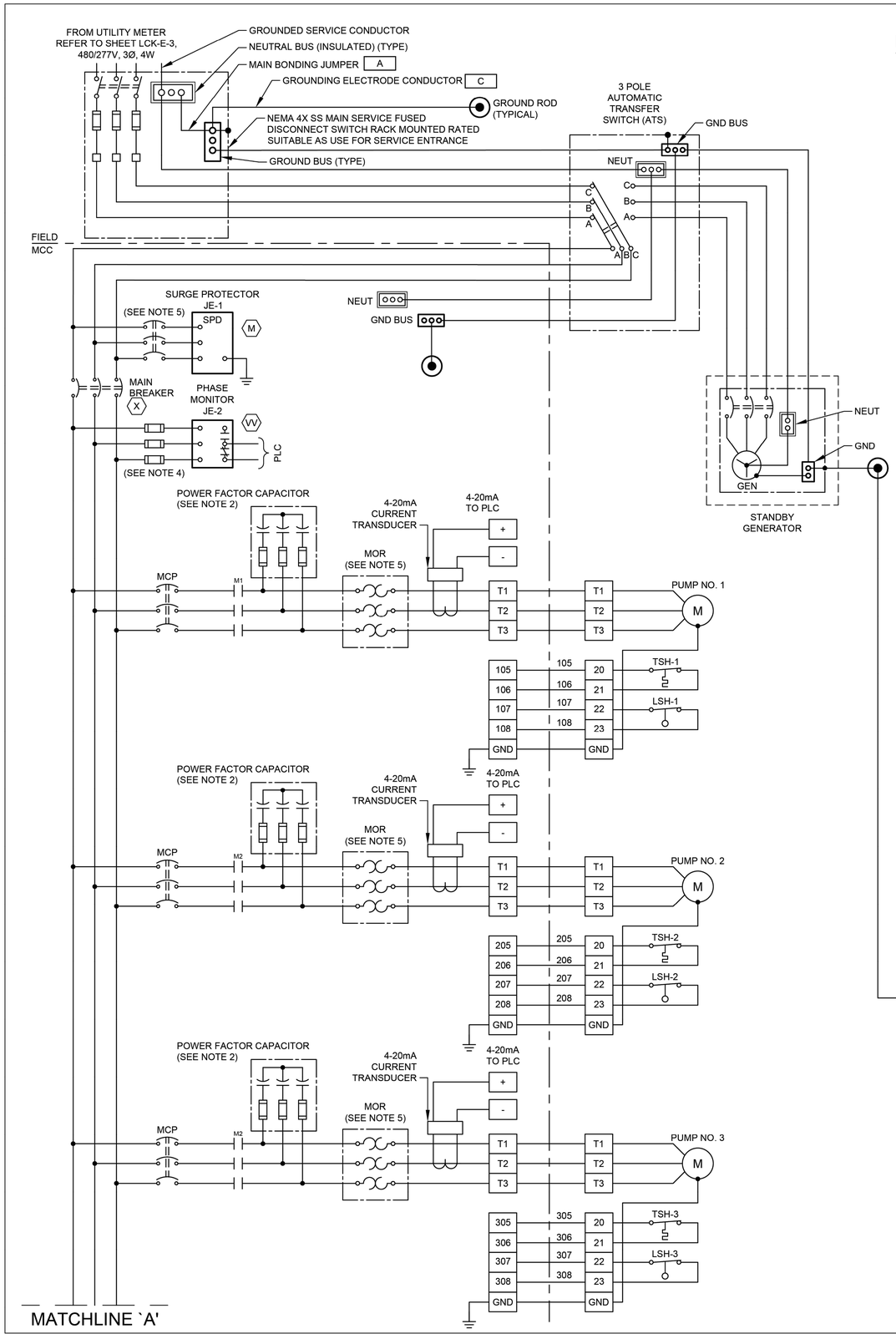

MATCHLINE `A'

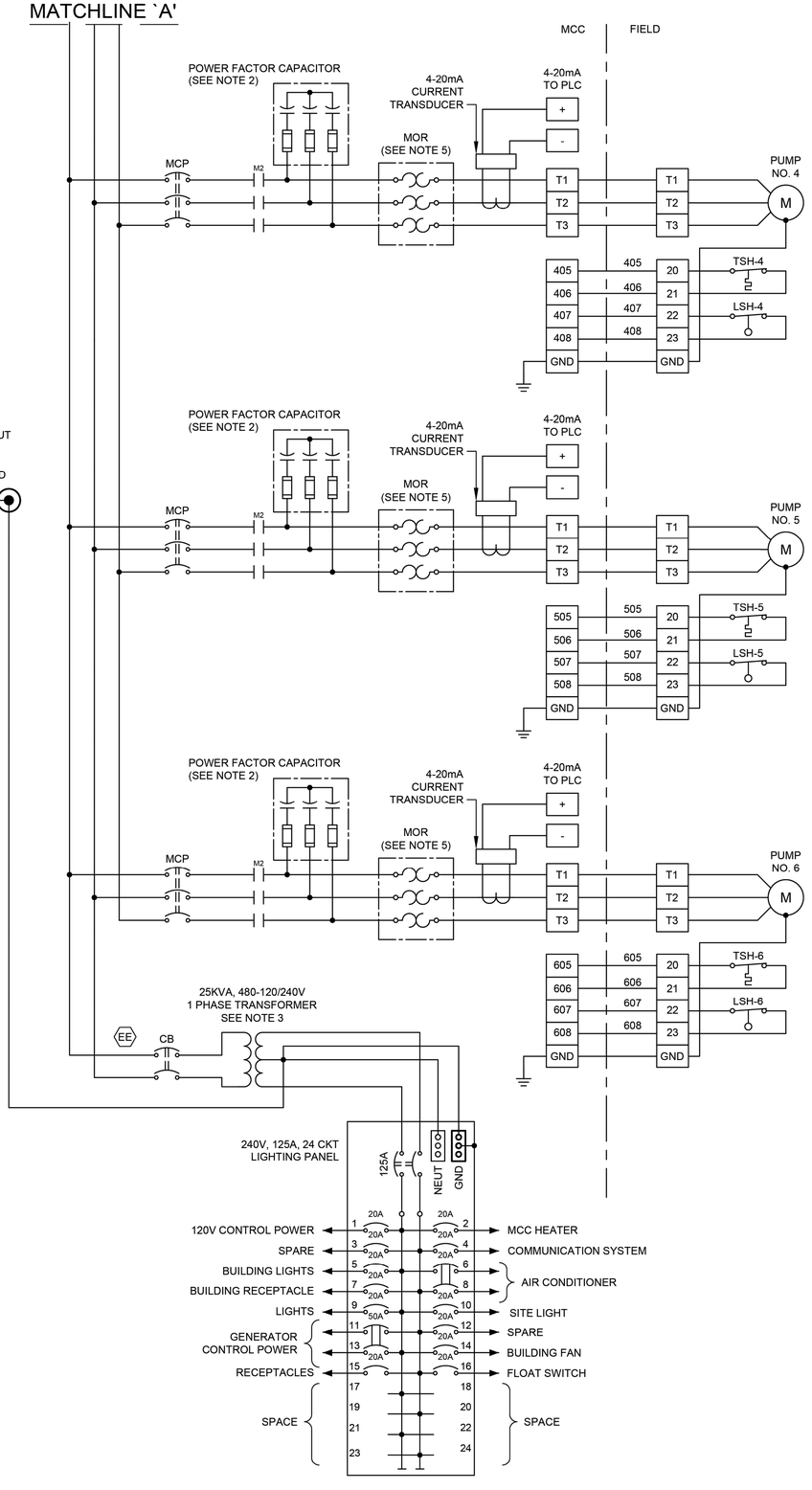

NOTES:

1. UNLESS OTHERWISE INDICATE, ALL DEVICES WITHOUT FURTHER DESIGNATION ARE LOCATED AT THE CONTROL PANEL.
2. CONTRACTOR TO COORDINATE POWER FACTOR CORRECTION CAPACITOR SIZE WITH PUMP MANUFACTURER.
3. CONTRACTOR SHALL TERMINATE POWER & CONTROL WIRES PER MANUFACTURER'S REQUIREMENTS.
4. PROVIDE FUSE SIZE ACCORDING TO MANUFACTURER'S REQUIREMENTS.
5. PROVIDE BREAKER SIZE ACCORDING TO MANUFACTURER'S REQUIREMENTS.
6. THE COMBINATION OF CT AND MOTOR OVERLOAD RELAY IF REQUIRED.

GENERAL NOTES:

1. NO ELECTRICAL MATERIAL, APPARATUS, DEVICES, APPLIANCES, FIXTURES, OR EQUIPMENT SHALL BE SOLD OR INSTALLED IN THE CITY UNLESS THEY ARE IN CONFORMANCE WITH THE PROVISIONS OF SECTION 508 CITY OF HOUSTON ELECTRICAL CODE, THE LAWS OF THE STATE OF TEXAS AND ANY APPLICABLE RULES AND REGULATIONS ISSUED UNDER THE AUTHORITY OF THE STATE STATUES. THE MAKER'S NAME, TRADEMARK, OR OTHER IDENTIFICATION SYMBOL SHALL BE PLACED ON ALL ELECTRICAL MATERIALS, APPARATUS, DEVICES, APPLIANCES, FIXTURES, AND EQUIPMENT USED OR INSTALLED UNDER THE PROVISIONS OF THIS CODE. ALL ELECTRICAL MATERIALS AND EQUIPMENT SHALL BE LISTED AND LABELED FOR THE INTENDED USE AND SHALL BE INCLUDED IN A LIST PUBLISHED BY AN APPROVAL AGENCY.

NO.	DATE	REVISION	APP.

FOR INTERIM REVIEW
ONLY NOT INTENDED FOR
PERMIT, BIDDING OR
CONSTRUCTION PURPOSES.
ENGINEER:
HOSS FOROUZAN
P.E. SERIAL NO.77748
12/15/2025

GAI
Gupta & Associates, Inc.
CONSULTING ENGINEERING
Registration No. F-2593
302 Dennis St.,
Houston, Texas 77006
Tel: 713-636-2936
Fax: 713-636-2987
email: hforouzan@gaiconsulting.com

IDS Engineering Group
13430 NW. Freeway
Suite 700
Houston, Tx. 77040
713.462.3178
TxEng Firm 2726
TxSurv Firm 10110700

CITY OF HOUSTON
HOUSTON PUBLIC WORKS

LIFT STATION RENEWAL AND REPLACEMENT FY 2023

LOCKWOOD LIFT STATION THREE-LINE DIAGRAM

WBS NUMBER	FOR CITY OF HOUSTON USE ONLY
R-000267-0179-4	
DRAWING SCALE	
HORIZ: VERT:	
CITY OF HOUSTON PM	
NAWARAJ PANTA, P.E.	
DWG. NO. LCK-E-4	SHEET NO. 44 OF 321

IDS JOB No. 0057-085-00

FILE PATH: O:\H8108_Lift Station Rehabilitation And Reconstruction (IDS)\6 Drawings\Electrical\Working\Lockwood\H8108_LCK-E-04.dwg

PLOTTED: 12/11/2025 8:23 PM

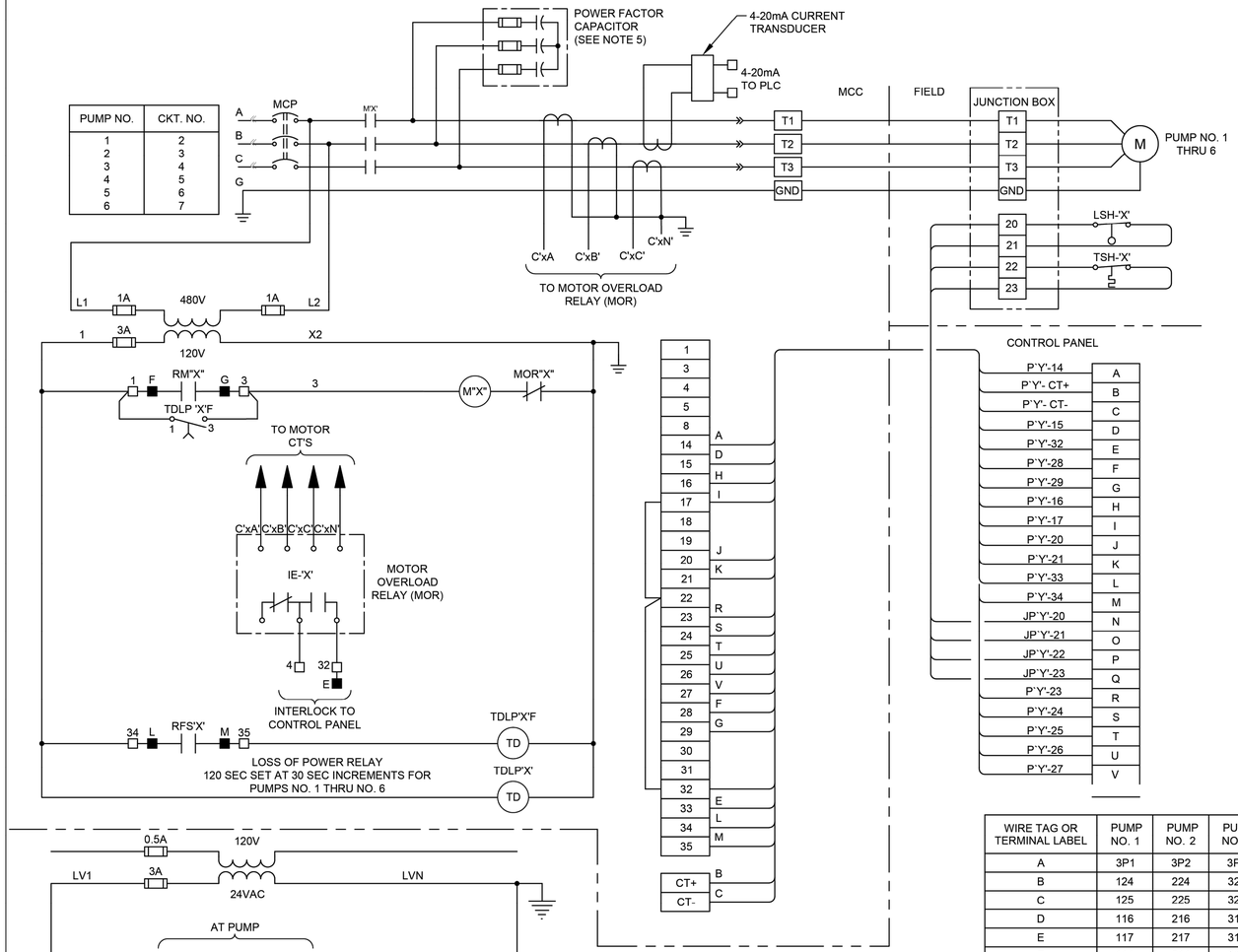

WIRE TAG OR TERMINAL LABEL	PUMP NO. 1	PUMP NO. 2	PUMP NO. 3	PUMP NO. 4	PUMP NO. 5	PUMP NO. 6	FUNCTION
A	3P1	3P2	3P3	3P4	3P5	3P6	24VDC CONTROL
B	124	224	324	424	524	624	4-20mA CURRENT TRANSDUCER
C	125	225	325	425	525	625	4-20mA CURRENT TRANSDUCER
D	116	216	316	416	516	616	M CONTACT
E	117	217	317	417	517	617	OVERLOAD ALARM
F	114	214	314	414	514	614	RUN INTERLOCK
G	115	215	315	415	515	615	RUN INTERLOCK
H	102	202	302	402	502	602	LOSS OF POWER TIMER
I	103	203	303	403	503	603	LOSS OF POWER TIMER
J	118	218	318	418	518	618	ALARM RESET INTERLOCK
K	119	219	319	419	519	619	ALARM RESET INTERLOCK
L	126	226	326	426	526	626	FLOAT SWITCH RUN INTERLOCK
M	127	227	327	427	527	627	FLOAT SWITCH RUN INTERLOCK
N	120	220	320	420	520	620	SEAL LEAK DETECTOR
O	121	221	321	421	521	621	SEAL LEAK DETECTOR
P	122	222	322	422	522	622	MOTOR TEMPERATURE SWITCH
Q	123	223	323	423	523	623	MOTOR TEMPERATURE SWITCH
R	109	209	309	409	509	609	VFD MODE
S	110	210	310	410	510	610	4-20mA VFD SPEED CONTROL
T	111	211	311	411	511	611	4-20mA VFD SPEED CONTROL
U	112	212	312	412	512	612	4-20mA VFD SPEED INDICATION
V	113	213	313	413	513	613	4-20mA VFD SPEED INDICATION

INDOOR MCC SCHEMATIC & WIRING DIAGRAM

SCHEMATIC 1 -

LEGEND

- △ DEVICE OR FIELD TERMINAL LOCATED AT MOTOR
- ✳ DEVICE OR FIELD TERMINAL LOCATED REMOTE
- □ DEVICE OR FIELD TERMINAL LOCATED AT POWER PANEL
- ■ FIELD TERMINAL LOCATED AT CONTROL PANEL
- ▲ REMOTE TERMINAL
- ● DEVICE TERMINAL NO.
- ◆ PC INTERFACE TERMINAL

NO.	DATE	REVISION	APP.

FOR INTERIM REVIEW
ONLY NOT INTENDED FOR
PERMIT, BIDDING OR
CONSTRUCTION PURPOSES.
ENGINEER:
HOSS FOROUZAN
P.E. SERIAL NO.77748
12/15/2025

GAI
Gupta & Associates, Inc.
CONSULTING ENGINEERING
Registration No. F-2593
302 Dennis St.,
Houston, Texas 77006
Tel: 713-636-2936
Fax: 713-636-2987
email: hforouzan@gaiconsulting.com

IDS Engineering Group
13430 NW. Freeway
Suite 700
Houston, Tx. 77040
713.462.3178
TxEng Firm 2726
TxSurv Firm 10110700

CITY OF HOUSTON
HOUSTON PUBLIC WORKS

LIFT STATION RENEWAL AND REPLACEMENT FY 2023

LOCKWOOD LIFT STATION MCC SCHEMATIC & WIRING DIAGRAM

WBS NUMBER	FOR CITY OF HOUSTON USE ONLY
R-000267-0179-4	
DRAWING SCALE	
HORIZ: VERT:	
CITY OF HOUSTON PM	
NAWARAJ PANTA, P.E.	

DWG. NO.	SHEET NO.
LCK–E–5	45 OF 321

IDS JOB No. 0057-085-00

FILE PATH: O:\H8108_Lift Station Rehabilitation And Reconstruction (IDS)\6 Drawings\Electrical\Working\Lockwood\H8108_LCK-E-05.dwg

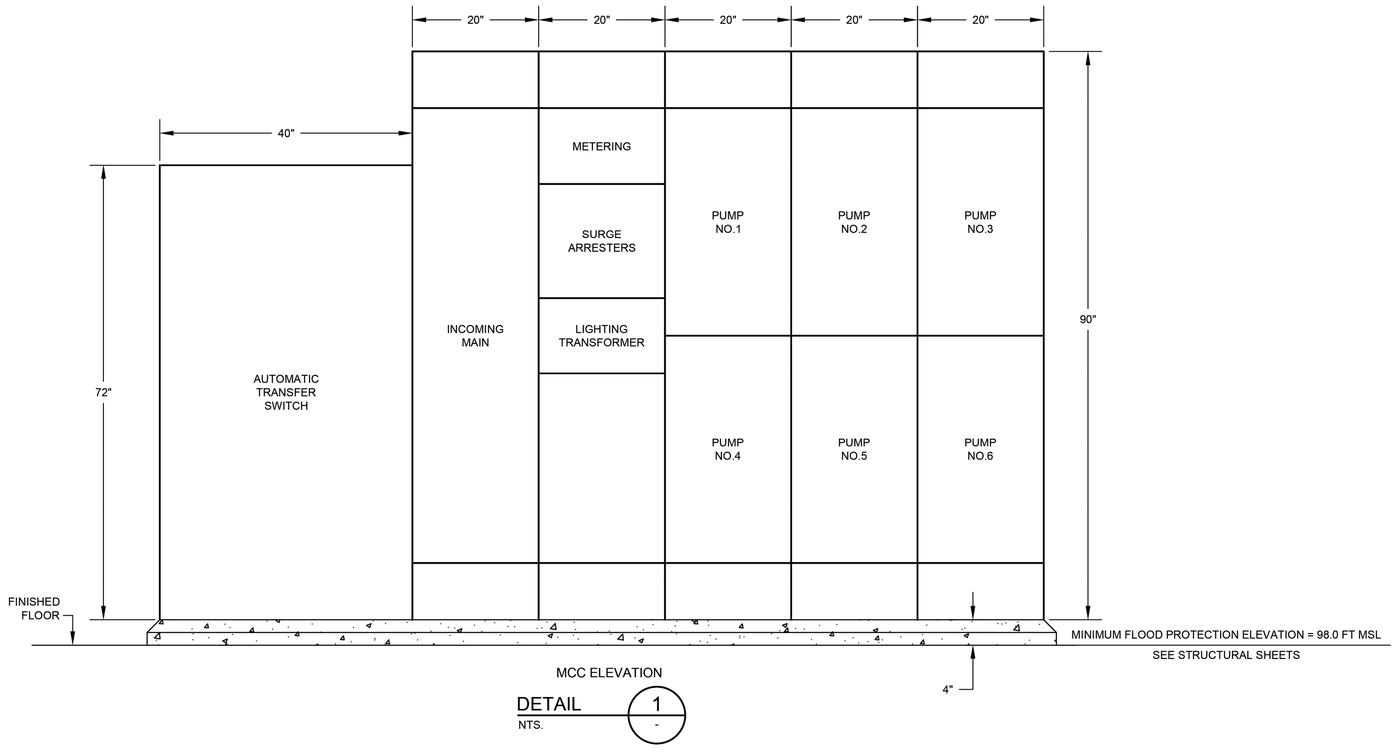

MCC ELEVATION

DETAIL 1 / -

NTS.

NO.	DATE	REVISION	APP.

FOR INTERIM REVIEW
ONLY NOT INTENDED FOR
PERMIT, BIDDING OR
CONSTRUCTION PURPOSES.
ENGINEER:
HOSS FOROUZAN
P.E. SERIAL NO.77748
12/15/2025

GAI
Gupta & Associates, Inc.
CONSULTING ENGINEERING
Registration No. F-2593
302 Dennis St.,
Houston, Texas 77006
Tel: 713-636-2936
Fax: 713-636-2987
email: hforouzan@gaiconsulting.com

IDS Engineering Group
13430 NW. Freeway
Suite 700
Houston, Tx. 77040
713.462.3178
TxEng Firm 2726
TxSurv Firm 10110700

CITY OF HOUSTON
HOUSTON PUBLIC WORKS

LIFT STATION RENEWAL
AND REPLACEMENT FY 2023

LOCKWOOD LIFT STATION
MCC ELEVATION

WBS NUMBER	FOR CITY OF HOUSTON USE ONLY
R-000267-0179-4	
DRAWING SCALE	
HORIZ: VERT:	
CITY OF HOUSTON PM	
NAWARAJ PANTA, P.E.	

DWG. NO.	SHEET NO.
LCK–E–6	46 OF 321

IDS JOB No. 0057-085-00

PLOTTED: 12/11/2025 8:23 PM
FILE PATH: O:\H8108_Lift Station Rehabilitation And Reconstruction (IDS)\6 Drawings\Electrical\Working\Lockwood\H8108_LCK-E-06.dwg

PLOTTED: 12/11/2025 8:23 PM

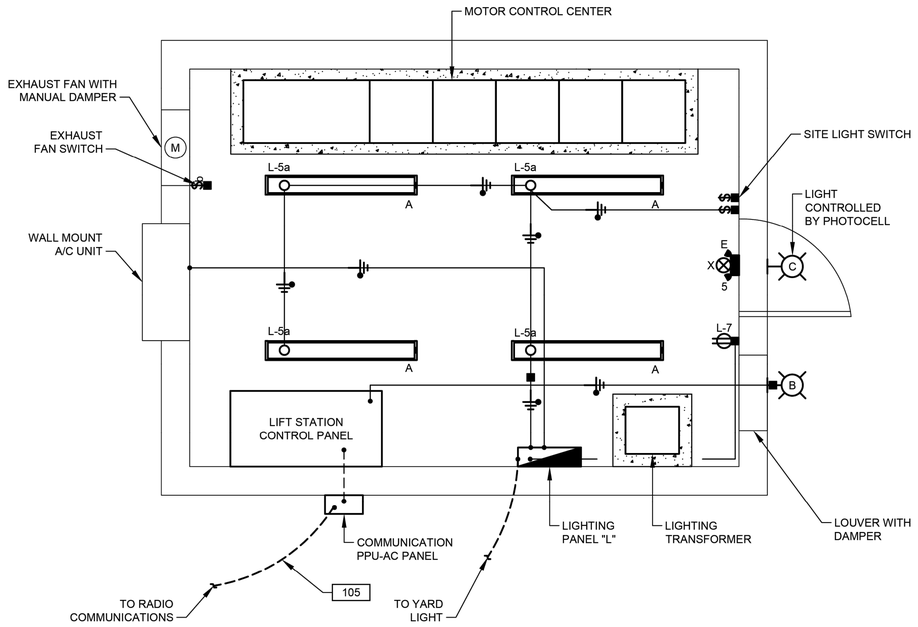

LIGHTING & COMMUNICATION SYSTEM PLAN
1/2"=1'-0"

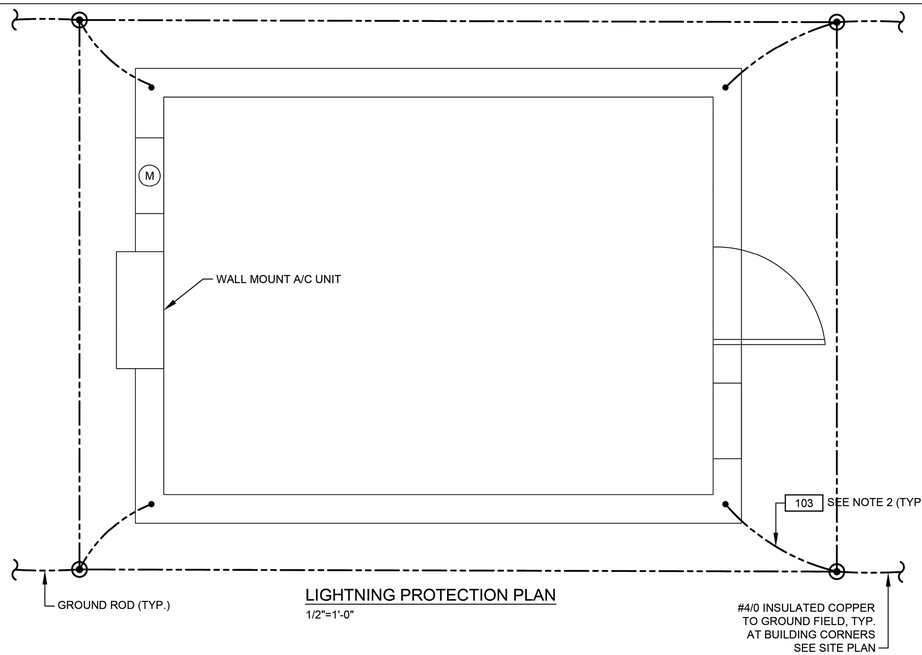

LIGHTNING PROTECTION PLAN
1/2"=1'-0"

NOTES:

1. THERMO WELD BUILDING GROUND CONDUCTOR TO BUILDING REINFORCING STEEL.
2. BOND REBAR IN CONCRETE FOOTER TO GROUND ROD.

NO.	DATE	REVISION	APP.

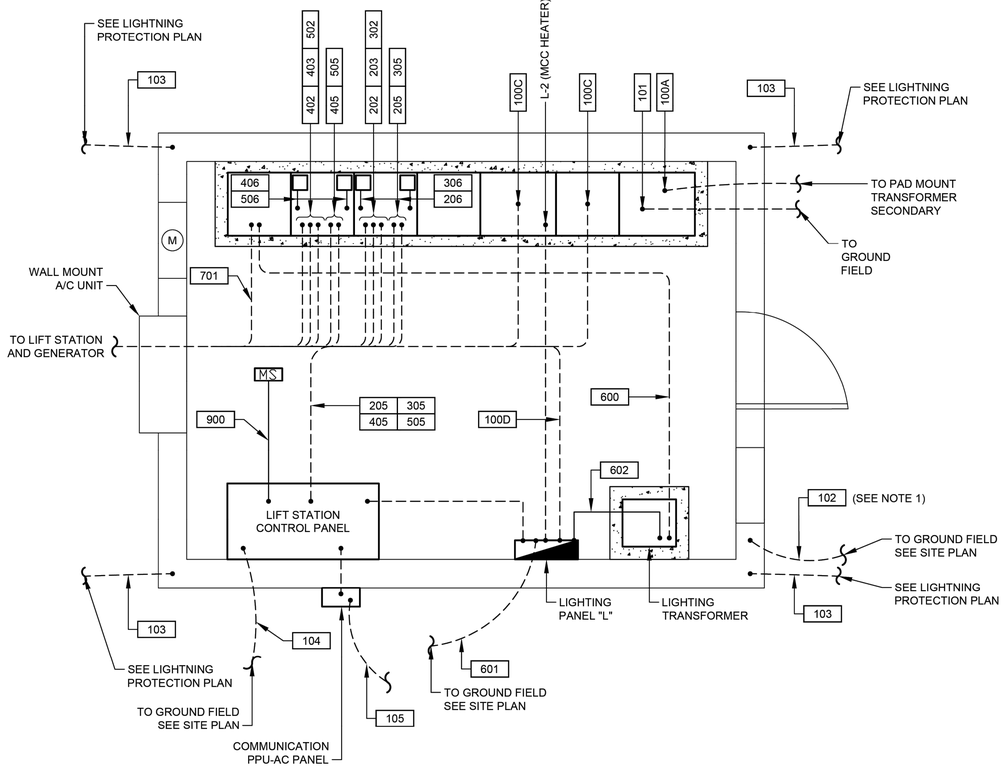

POWER PLAN
1/2"=1'-0"

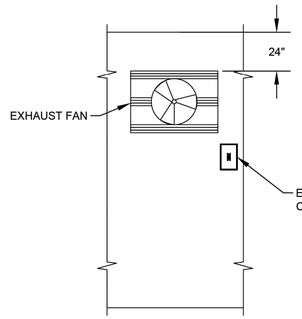

EXHAUST FAN
NTS.

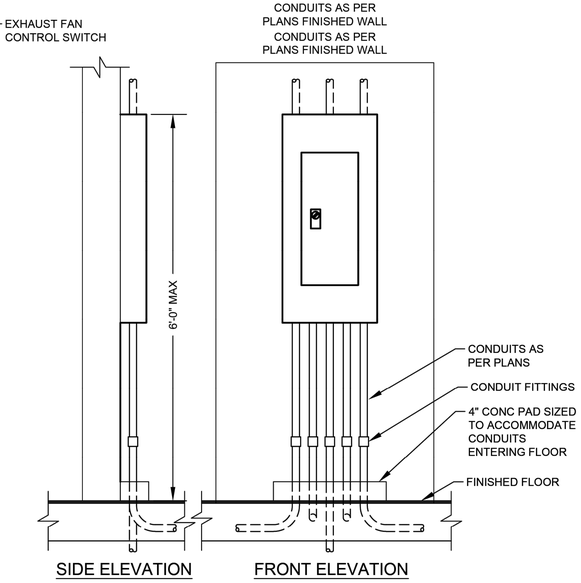

TYPICAL PANEL INSTALLATION

DETAIL - NTS.

FOR INTERIM REVIEW
ONLY NOT INTENDED FOR
PERMIT, BIDDING OR
CONSTRUCTION PURPOSES.
ENGINEER:
HOSS FOROUZAN
P.E. SERIAL NO.77748
12/15/2025

GAI
Gupta & Associates, Inc.
CONSULTING ENGINEERING
Registration No. F-2593
302 Dennis St.,
Houston, Texas 77006
Tel: 713-636-2936
Fax: 713-636-2987
email: hforouzan@gaiconsulting.com

IDS Engineering Group
13430 NW. Freeway
Suite 700
Houston, Tx. 77040
713.462.3178
TxEng Firm 2726
TxSurv Firm 10110700

CITY OF HOUSTON
HOUSTON PUBLIC WORKS

LIFT STATION RENEWAL AND REPLACEMENT FY 2023

LOCKWOOD LIFT STATION CONTROL BUILDING PLAN

WBS NUMBER	FOR CITY OF HOUSTON USE ONLY
R-000267-0179-4	
DRAWING SCALE	
HORIZ: VERT:	
CITY OF HOUSTON PM	
NAWARAJ PANTA, P.E.	
DWG. NO. LCK-E-7	SHEET NO. 47 OF 321

IDS JOB No. 0057-085-00

FILE PATH: O:\H8108_Lift Station Rehabilitation And Reconstruction (IDS)\6 Drawings\Electrical\Working\Lockwood\H8108_LCK-E-07.dwg

PLOTTED: 12/11/2025 8:23 PM

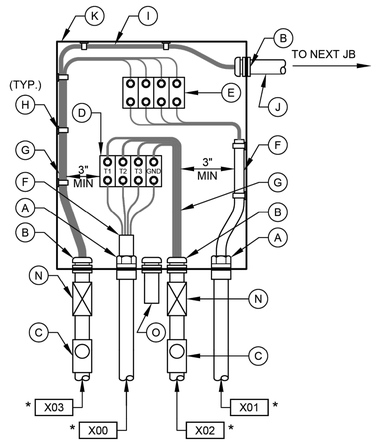

PUMP NO.1 & NO.3 & NO.5
JUNCTION BOX

DETAIL 3
NTS
(SEE NOTE 7)

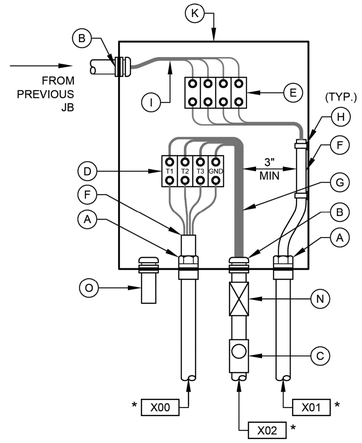

PUMP NO.2 & NO.4 & NO.6
JUNCTION BOX

DETAIL 4
NTS
(SEE NOTE 7)

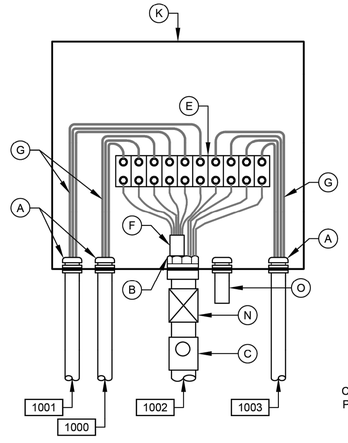

LEVEL TRANSMITTER
JUNCTION BOX

DETAIL 6
NTS
(SEE NOTE 7)

✱ REPLACE `X' PER NOTATION SCHEDULE

NOTATION SCHEDULE

`X'	PUMP NO.
2	1
3	2
4	3
5	4
6	5
7	6

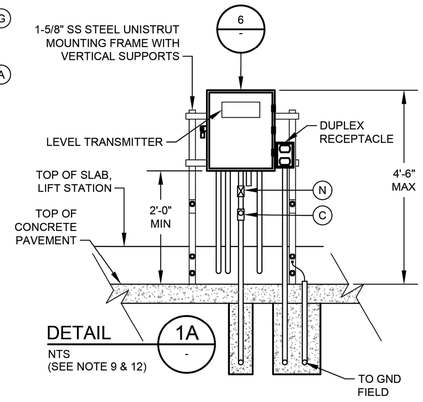

DETAIL 1A
NTS
(SEE NOTE 9 & 12)

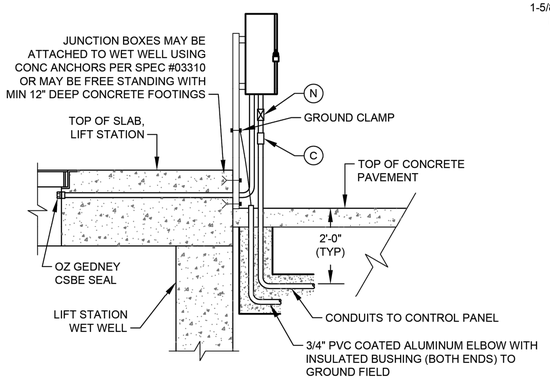

TYP SIDE VIEW FOR DETAIL 1, 1A, 2, & 7

(SEE NOTE 10)

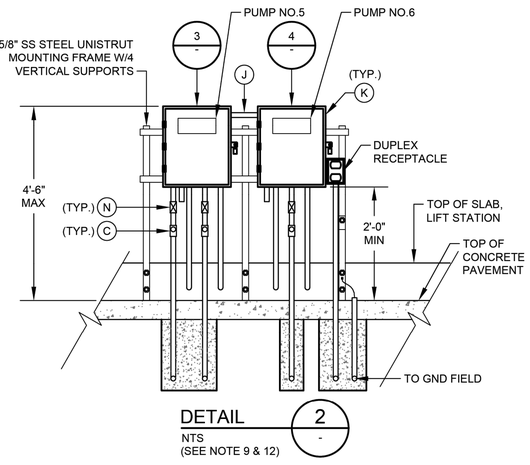

DETAIL 2
NTS
(SEE NOTE 9 & 12)

JUNCTION BOX EQUIPMENT SCHEDULE

- A - OZ GEDNEY CSBE SEAL
- B - WATERTIGHT CONDUIT HUB WITH INSULATED BUSHING
- C - CLASS I, DIV 1, EXPLOSION PROOF SEAL INSTALLED PER NEC DIV 501
- D - POWER TERMINAL BLOCK W/SCREW DOWN BOX LUGS
- E - CONTROL TERM BLOCK W/SCREW DOWN BOX LUGS
- F - MULTI-CONDUCTOR CABLE, REMOVE OUTER JACKET AS SHOWN
- G - WIRING AS SCHEDULED
- H - WIRING HARNESS PERMANENTLY AFFIXED
- I - PUMP CONTROL WIRING FROM PUMPS 2; 2 & 3; 4; OR D2, AS APPLICABLE
- J - 1 1/2" PVC COATED CONDUIT NIPPLE
- K - NEMA 4X STAINLESS STEEL JUNCTION BOX WITH GASKETED FRONT COVER, SINGLE QUARTER TURN, OIL-TIGHT LATCH AND PADLOCKING PROVISIONS, HOFFMAN D-3L16H1206 SS LF OR EQUAL. MINIMUM SIZE: 12"W X 16"H X 6"D
- L - NAMEPLATE, SEE SPECIFICATIONES (SEE NAMEPLATE SCHEDULE)
- M - MOTOR RATED SWITCH
- N - EXPANSION FITTING
- O - DRAIN VENT

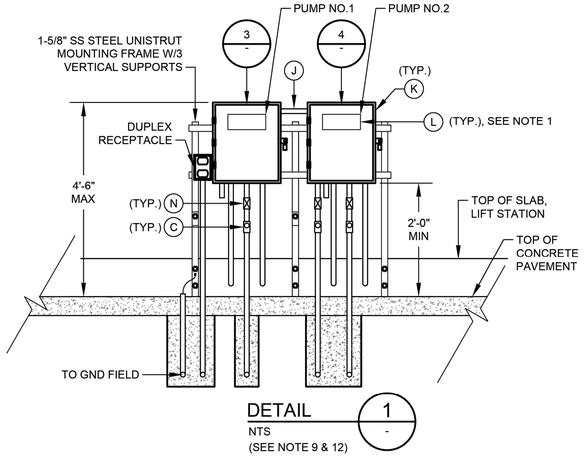

DETAIL 1
NTS
(SEE NOTE 9 & 12)

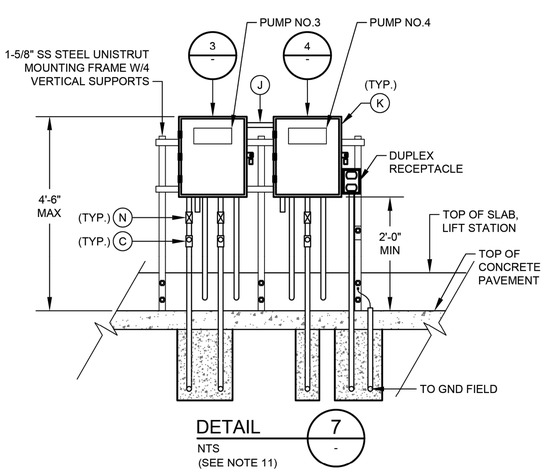

DETAIL 7
NTS
(SEE NOTE 11)

NOTES:

1. NAMEPLATES SHALL BE MOUNTED TO JUNCTION BOXES USING 316 STAINLESS STEEL HARDWARE.
2. MAINTAIN MINIMUM SEPARATION REQUIRED UNDER NEC ARTICLE 504, BETWEEN INTRINSICALLY SAFE CONTROL WIRING AND NON INTRINSICALLY SAFE MOTOR FEEDER WIRING.
3. UNLESS OTHERWISE NOTED, ALL EXTERIOR EXPOSED CONDUITS SHALL BE PVC COATED ALUMINUM.
4. UNLESS OTHERWISE NOTED, ALL NUTS, BOLTS, SCREWS WASHERS, ETC SHALL BE TYPE 316 STAINLESS STEEL.
5. ALL UNDERGROUND CONDUITS TO BE ENCASED IN REINFORCED CONCRETE DUCTBANK.
6. PROVIDE ANTI-CORROSIVE SPRAY ON ANY BARE METAL PARTS OR EXPOSED WIRE.
7. SEE WIRING SCHEMATICS FOR TERMINALS AND WIRE NUMBERS.
8. ANY CONDUIT REQUIRING A CSBE SEAL, SHALL BE A MINIMUM SIZE OF 2 1/2" PER CABLE.
9. DETAIL SHOWN MAY BE MODIFIED PER SITE SITUATION.
10. COORDINATE WITH WASTE WATER OPERATIONS ELECTRICAL ORGANIZATION FOR THE OPENING OF JUNCTION BOXES TO THE SIDE OF WET WELL IF REQUIRED DURING CONSTRUCTION.
11. THE ENCLOSURES WITH ELECTRICAL CIRCUITS SHALL BE A MINIMUM OF 5 FEET FROM ANY CLASSIFIED AREA, OTHERWISE EXPLOSION PROOF TYPE ENCLOSURES SHALL BE USED.
12. THE RECEPTACLES SHALL BE EXPLOSION PROOF TYPE IF INSTALLED WITHIN 5 FEET OF CLASSIFIED AREA, SHALL BE FIELD VERIFIED.

NO.	DATE	REVISION	APP.

FOR INTERIM REVIEW
ONLY NOT INTENDED FOR
PERMIT, BIDDING OR
CONSTRUCTION PURPOSES.
ENGINEER:
HOSS FOROUZAN
P.E. SERIAL NO.77748
12/15/2025

GAI
Gupta & Associates, Inc.
CONSULTING ENGINEERING
Registration No. F-2593
302 Dennis St.,
Houston, Texas 77006
Tel: 713-636-2936
Fax: 713-636-2987
email: hforouzan@gaiconsulting.com

IDS Engineering Group
13430 NW. Freeway
Suite 700
Houston, Tx. 77040
713.462.3178
TxEng Firm 2726
TxSurv Firm 10110700

CITY OF HOUSTON
HOUSTON PUBLIC WORKS

LIFT STATION RENEWAL
AND REPLACEMENT FY 2023

LOCKWOOD LIFT STATION JUNCTION BOX DETAILS

WBS NUMBER	FOR CITY OF HOUSTON USE ONLY
R-000267-0179-4	
DRAWING SCALE	
HORIZ: VERT:	
CITY OF HOUSTON PM	
NAWARAJ PANTA, P.E.	
DWG. NO. LCK-E-8	SHEET NO. 48 OF 321

IDS JOB No. 0057-085-00

FILE PATH: O:\H8108_Lift Station Rehabilitation And Reconstruction (IDS)\6 Drawings\Electrical\Working\Lockwood\H8108_LCK-E-08.dwg

PLOTTED: 12/11/2025 8:23 PM

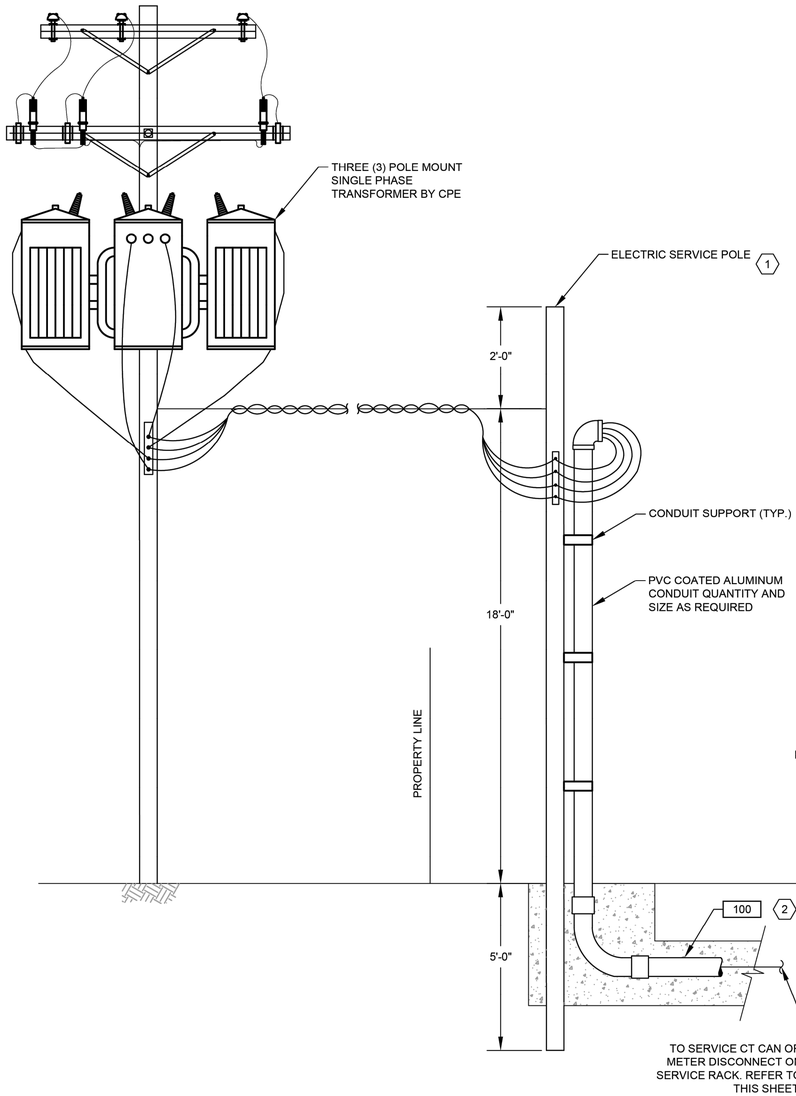

ELECTRICAL SERVICE ENTANCE

DETAIL 1 / NTS. -

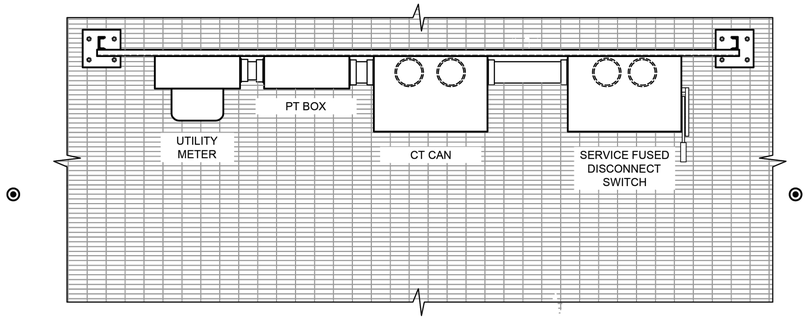

PLAN

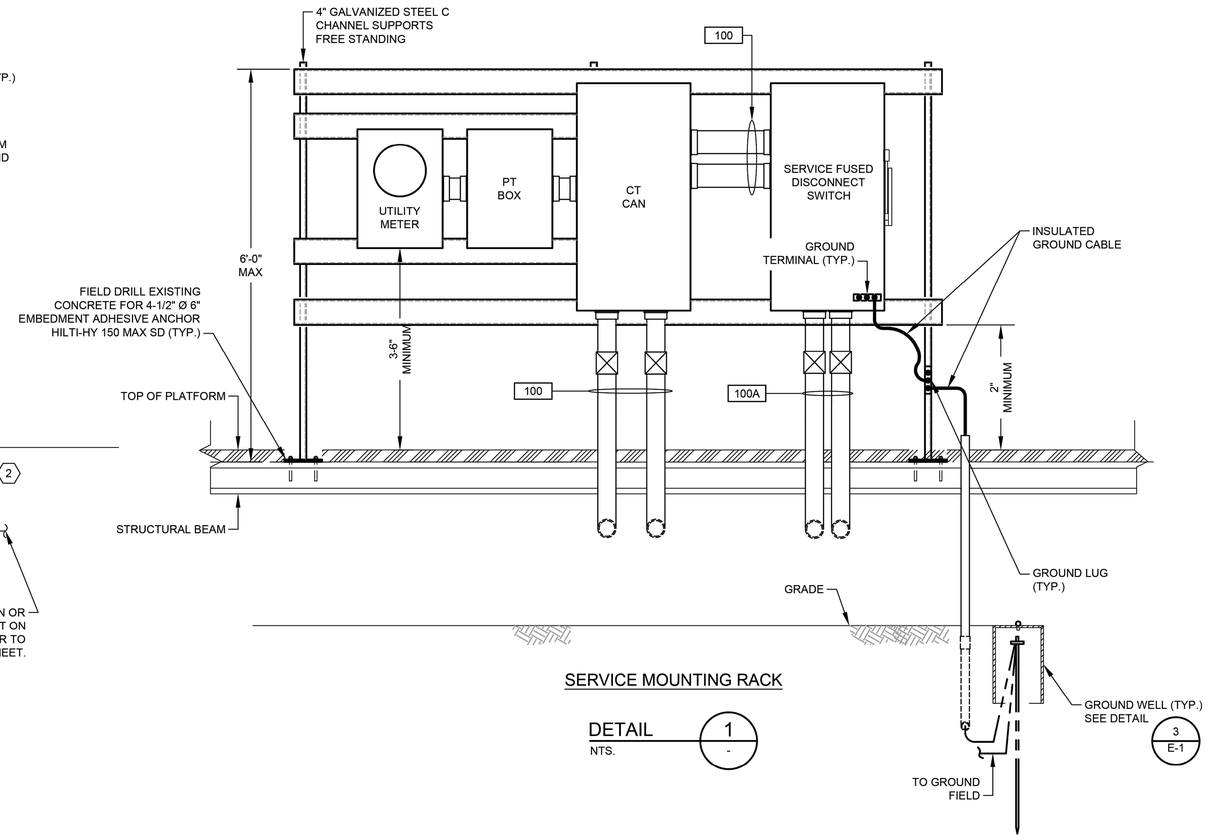

SERVICE MOUNTING RACK

DETAIL 1 / NTS. -

NOTES BY SYMBOL "#":

1. WOODEN POLE 20' LONG. TOP DIAMETER 6" BOTTOM DIAMETER 8" PROVIDED AND INSTALLED BY ELECTRICAL CONTRACTOR.
2. ELECTRICAL SERVICE FEEDER PROVIDED AND INSTALLED BY ELECTRICAL CONTRACTOR. COORDINATE WITH CPE FOR THE REQUIREMENTS OF THE INSTALLATION.

NO.	DATE	REVISION	APP.

FOR INTERIM REVIEW
ONLY NOT INTENDED FOR
PERMIT, BIDDING OR
CONSTRUCTION PURPOSES.
ENGINEER:
HOSS FOROUZAN
P.E. SERIAL NO.77748
12/15/2025

GAI
Gupta & Associates, Inc.
CONSULTING ENGINEERING
Registration No. F-2593
302 Dennis St.,
Houston, Texas 77006
Tel: 713-636-2936
Fax: 713-636-2987
email: hforouzan@gaiconsulting.com

IDS Engineering Group
13430 NW. Freeway
Suite 700
Houston, Tx. 77040
713.462.3178
TxEng Firm 2726
TxSurv Firm 10110700

CITY OF HOUSTON
HOUSTON PUBLIC WORKS

LIFT STATION RENEWAL AND REPLACEMENT FY 2023

LOCKWOOD LIFT STATION SERVICE POLE & RACK DETAIL

WBS NUMBER	FOR CITY OF HOUSTON USE ONLY
R-000267-0179-4	
DRAWING SCALE	
HORIZ: VERT:	
CITY OF HOUSTON PM	
NAWARAJ PANTA, P.E.	
SHEET NO. 49 OF 321	

DWG. NO. LCK-E-9

IDS JOB No. 0057-085-00

FILE PATH: O:\H8108_Lift Station Rehabilitation And Reconstruction (IDS)\6 Drawings\Electrical\Working\Lockwood\H8108_LCK-E-09.dwg

	DESCRIPTION	SERVICE		ROUTING			CONDUIT & WIRE SIZE
		VOLTAGE	AMPS OR HP	FROM	TO	VIA	
A	MAIN BONDING JUMPER	--	--	MAIN FUSED DISCONNECT NEUTRAL	MAIN FUSED DISCONNECT GROUND	--	#2 CU GND.
B	EQUIPMENT BONDING JUMPER	--	--	MCC/POWER PANEL ENCLOSURE	POWER/CONTROL PANEL & EQUIPMENT	--	#2 CU GND.
C	GROUNDED ELECTRODE CONDUCTOR	--	--	GROUNDING ELECTRODE	MAIN SERVICE FUSED DISCONNECT GROUNDING	--	#2 CU GND.
100	SERVICE ENTRANCE	480V	800A	UTILITY POWER SERVICE	METER DISCONNECT	--	2 SETS OF 3 #500MCM, #2 NEUT., #2 CU GND., 3-1/2"C. EA.
100A	SERVICE POWER	480V	800A	SERVICE DISCONNECT	ATS	--	2 SETS OF 3 #500MCM, #2 NEUT., #2 CU GND., 3-1/2"C. EA.
100B	NORMAL/EMERGENCY POWER	24VDC	--	ATS	CONTROL PANEL	--	4#14 AWG., 1"C.
100C	EMERGENCY POWER	480V	800A	ATS	GENERATOR	--	2 SETS OF 3 #500MCM, #2 NEUT., #2 CU GND., 3-1/2"C. EA.
100D	ELECTRIC POWER	480V	800A	ATS	CONTROL PANEL	--	2 SETS OF 3 #500MCM, #2 NEUT., #2 CU GND., 3-1/2"C. EA.
101	GENERATOR CONTROL	120V	--	ATS	GENERATOR	--	6#14., #12 GND., 1" C.
102	ANNUNCIATION	--	--	GENERATOR	CONTROL PANEL	--	12#14 AWG., #14 GND.
103	GENERATOR AUX. POWER	240/120V	60A	GENERATOR	LIGHTING PANEL	--	3#4 AWG., #6 GND., 1-1/2"C.
105	COMMUNICATION	--	--	COMMUNICATION POLE	CONTROL PANEL	--	1-1/2"C. CAT-5E
200	PUMP NO. 101 POWER	480V	85 HP	PUMP NO.101	PUMP NO.101 JUNCTION BOX	--	MANUFACTURER CABLE IN 2-1/2"C.
201	PUMP NO. 101 CONTROLS	120V	--	PUMP NO.101	PUMP NO.101 JUNCTION BOX	--	MANUFACTURER CABLE IN 2-1/2"C.
202	PUMP NO. 101 POWER	120V	85 HP	PUMP NO.101 JUNCTION BOX	PUMP STARTER	--	3#2/0 AWG., #6 GND., 2"C.
203	COMBINED PUMP CONTROLS	120V	--	PUMP NO.101 JUNCTION BOX	PUMP STARTER	--	COMBINE 200 & 300 WIRING, 10#14 1"C.
205	PUMP NO. 101 CONTROLS	120V	--	STARTER IN MOTOR CONTROL CENTER	CONTROL PANEL	--	12#14 1"C.
206	PUMP NO. 101 CAPACITOR	480V	TBD	PUMP NO. 101 MOTOR STARTER	POWER FACTOR CORRECTION CAPACITOR	--	3#6, #8 GND., 1" C.
300	PUMP NO. 102 POWER	480V	85 HP	PUMP NO. 102	PUMP NO. 102 JUNCTION BOX	--	MANUFACTURER CABLE IN 2-1/2"C.
301	PUMP NO. 102 CONTROLS	120V	--	PUMP NO. 102	PUMP NO. 102 JUNCTION BOX	--	MANUFACTURER CABLE IN 2-1/2"C.
302	PUMP NO. 102 POWER	480V	85 HP	PUMP NO.102 JUNCTION BOX	PUMP STARTER	--	3#2/0, #6 GND., 2" C.
305	PUMP NO. 102 CONTROLS	120V	--	STARTER IN MOTOR CONTROL CENTER	CONTROL PANEL	--	12#14, 1"C.
306	PUMP NO. 102 CAPACITOR	480V	TBD	PUMP NO. 101 MOTOR STARTER	POWER FACTOR CORRECTION CAPACITOR	--	3#6, #8 GND., 2" C.
400	PUMP NO. 103 POWER	480V	85 HP	PUMP NO. 103	PUMP NO. 103 JUNCTION BOX	--	MANUFACTURER CABLE IN 2-1/2"C.
401	PUMP NO. 103 CONTROLS	120V	--	PUMP NO. 103	PUMP NO. 103 JUNCTION BOX	--	MANUFACTURER CABLE IN 2-1/2"C.
402	PUMP NO. 103 POWER	120V	85 HP	PUMP NO. 103 JUNCTION BOX	PUMP STARTER	--	3#1, #6 GND., 2"C.
403	COMBINED PUMP CONTROLS	120V	--	PUMP NO. 103 JUNCTION BOX	CONTROL PANEL	--	COMBINE 400 & 500 WIRING, 10#14 1"C.
405	PUMP NO. 103 CONTROLS	120V	--	STARTER IN MOTOR CONTROL CENTER	CONTROL PANEL	--	12#14, 1"C.
406	PUMP NO. 103 CAPACITOR	480V	TBD	PUMP NO. 101 MOTOR STARTER	POWER FACTOR CORRECTION CAPACITOR	--	3#6, #8 GND., 1"C.
500	PUMP NO. 104 POWER	480V	85 HP	PUMP NO. 104	PUMP NO. 104 JUNCTION BOX	--	MANUFACTURER CABLE IN 2-1/2"C.
501	PUMP NO. 104 CONTROLS	120V	--	PUMP NO. 104	PUMP NO. 104 JUNCTION BOX	--	MANUFACTURER CABLE IN 2-1/2"C.
502	PUMP NO. 104 POWER	480V	85 HP	PUMP NO. 104 JUNCTION BOX	PUMP STARTER	--	3#2/0 AWG., #6 GND., 2"C.
505	PUMP NO. 104 CONTROLS	120V	--	STARTER IN MOTOR CONTROL CENTER	CONTROL PANEL	--	12#14, 1"C.
506	PUMP NO. 104 CAPACITOR	480V	TBD	PUMP NO. 101 MOTOR STARTER	POWER FACTOR CORRECTION CAPACITOR	--	3#6, #8 GND., 1"C.
600	PUMP NO. 105 POWER	480V	85 HP	PUMP NO. 105	PUMP NO. 105 JUNCTION BOX	--	MANUFACTURER CABLE IN 2-1/2"C.
601	PUMP NO. 105 CONTROLS	120V	--	PUMP NO. 105	PUMP NO. 105 JUNCTION BOX	--	MANUFACTURER CABLE IN 2-1/2"C.
602	PUMP NO. 105 POWER	120V	85 HP	PUMP NO. 105 JUNCTION BOX	PUMP STARTER	--	3#2/0 AWG., #6 GND., 2"C.
603	COMBINED PUMP CONTROLS	120V	--	PUMP NO. 105 JUNCTION BOX	CONTROL PANEL	--	COMBINE 600 & 700 WIRING, 10#14 1"C.
605	PUMP NO. 105 CONTROLS	120V	--	STARTER IN MOTOR CONTROL CENTER	CONTROL PANEL	--	12#14, 1"C.
606	PUMP NO. 105 CAPACITOR	480V	TBD	PUMP NO. 101 MOTOR STARTER	POWER FACTOR CORRECTION CAPACITOR	--	3#6, #8 GND., 1"C.
700	PUMP NO. 106 POWER	480V	85 HP	PUMP NO. 106	PUMP NO. 106 JUNCTION BOX	--	MANUFACTURER CABLE IN 2-1/2"C.
701	PUMP NO. 106 CONTROLS	120V	--	PUMP NO. 106	PUMP NO. 106 JUNCTION BOX	--	MANUFACTURER CABLE IN 2-1/2"C.
702	PUMP NO. 106 POWER	480V	85 HP	PUMP NO. 106 JUNCTION BOX	PUMP STARTER	--	3#2/0 AWG., #6 GND., 2"C.
705	PUMP NO. 106 CONTROLS	120V	--	STARTER IN MOTOR CONTROL CENTER	CONTROL PANEL	--	12#14 1"C.
706	PUMP NO. 106 CAPACITOR	480V	TBD	PUMP NO. 101 MOTOR STARTER	POWER FACTOR CORRECTION CAPACITOR	--	3#6, #8 GND., 1"C.
800	LIGHTING TRANSFORMER FEEDER	480V	70A	MOTOR CONTROL CENTER	LIGHTING TRANSFORMER	--	2#4, #6 GND., 1"C.
801	LIGHTING TRANSFORMER GROUND	--	--	LIGHTING PANEL	GROUND FIELD	--	#8 GND., 1"C.
802	LIGHTING PANEL FEEDER	120/240V	--	LIGHTING TRANSFORMER	LIGHTING PANEL	--	3#4, #6 GND., 1-1/4"C.
1000	LEVEL TRANSMITTER LT-1	24VDC	--	TRANSMITTER JUNCTION BOX	TRANSMITTER JUNCTION BOX	--	MANUFACTURER CABLE IN 2-1/2"C.
1001	LEVEL TRANSMITTER LT-2	24VDC	--	TRANSMITTER JUNCTION BOX	TRANSMITTER JUNCTION BOX	--	MANUFACTURER CABLE IN 2-1/2"C.
1002	COMBINED LEVEL TRANSMITTERS & FLOAT SWITCH	24VDC	--	CONTROL PANEL	TRANSMITTER JUNCTION BOX	--	2-TRI, 4#14, 2"C.
1003	WELL FLOAT SWITCHES	24VDC	--	TRANSMITTER JUNCTION BOX	FLOAT SWITCH NO.1 & NO.2	--	MANUFACTURER CABLE IN 2-1/2"C.
1100	120VAC FOR RECEPTACLE	--	--	LIGHTING PANEL	RECEPTACLE NEXT TO TRANSMITTER J-BOX	--	2#12, #12G, 1"C.
1200	120VAC FOR RECEPTACLE	--	--	LIGHTING PANEL	RECEPTACLE NEXT TO PUMP NO.2 J-BOX	--	2#12, #12G, 1"C.
1300	SITE LIGHTING	120V	--	LIGHTING PANEL	SITE LIGHTS	--	2#12, #12G, 1"C.
1300A	SITE LIGHTING	120V	--	LIGHTING PANEL	SITE LIGHTING SWITCH	--	2#12 AWG ., #12 GND., 1"C.

NO.	DATE	REVISION	APP.

FOR INTERIM REVIEW
ONLY NOT INTENDED FOR
PERMIT, BIDDING OR
CONSTRUCTION PURPOSES.
ENGINEER:
HOSS FOROUZAN
P.E. SERIAL NO.77748
12/15/2025

GAI
Gupta & Associates, Inc.
CONSULTING ENGINEERING
Registration No. F-2593
302 Dennis St.,
Houston, Texas 77006
Tel: 713-636-2936
Fax: 713-636-2987
email: hforouzan@gaiconsulting.com

IDS Engineering Group
13430 NW. Freeway
Suite 700
Houston, Tx. 77040
713.462.3178
TxEng Firm 2726
TxSurv Firm 10110700

CITY OF HOUSTON
HOUSTON PUBLIC WORKS

LIFT STATION RENEWAL AND REPLACEMENT FY 2023

LOCKWOOD LIFT STATION CONDUIT SCHEDULE

WBS NUMBER	FOR CITY OF HOUSTON USE ONLY
R-000267-0179-4	
DRAWING SCALE	
HORIZ: VERT:	
CITY OF HOUSTON PM	
NAWARAJ PANTA, P.E.	
SHEET NO. 50 OF 321	

DWG. NO. LCK-E-10

IDS JOB No. 0057-085-00

PLOTTED: 12/11/2025 8:23 PM

FILE PATH: O:\H8108_Lift Station Rehabilitation And Reconstruction (IDS)\6 Drawings\Electrical\Working\Lockwood\H8108_LCK-E-10.dwg

PLOTTED: 12/11/2025 8:19 PM

HMI

INFLUENT PUMP NO. 1

SEAL FAIL ALARM	MOTOR OVERLOAD ALARM	MOTOR CURRENT	HIGH TEMP ALARM	IN HAND	IN AUTO	ON/OFF	START/ STOP
MA 1	MO 1	II 1	TH 1	HI 1	IA 1	YFS 1	YCS 1

INFLUENT PUMP NO. 2

SEAL FAIL ALARM	MOTOR OVERLOAD ALARM	MOTOR CURRENT	HIGH TEMP ALARM	IN HAND	IN AUTO	ON/OFF	START/ STOP
MA 2	MO 2	II 2	TH 2	HI 2	IA 2	YFS 2	YCS 2

INFLUENT PUMP NO. 3

SEAL FAIL ALARM	MOTOR OVERLOAD ALARM	MOTOR CURRENT	HIGH TEMP ALARM	IN HAND	IN AUTO	ON/OFF	START/ STOP
MA 3	MO 3	II 3	TH 3	HI 3	IA 3	YFS 3	YCS 3

INFLUENT PUMP NO. 4

SEAL FAIL ALARM	MOTOR OVERLOAD ALARM	MOTOR CURRENT	HIGH TEMP ALARM	IN HAND	IN AUTO	ON/OFF	START/ STOP
MA 4	MO 4	II 4	TH 4	HI 4	IA 4	YFS 4	YCS 4

INFLUENT PUMP NO. 5

SEAL FAIL ALARM	MOTOR OVERLOAD ALARM	MOTOR CURRENT	HIGH TEMP ALARM	IN HAND	IN AUTO	ON/OFF	START/ STOP
MA 5	MO 5	II 5	TH 5	HI 5	IA 5	YFS 5	YCS 5

CONTROL PANEL PLC

CONTROL BUILDING

480V → INFLUENT PUMPS MCC

INFLUENT PUMP NO. 1 — H/O/A — RUN
INFLUENT PUMP NO. 2 — H/O/A — RUN
INFLUENT PUMP NO. 3 — H/O/A — RUN
INFLUENT PUMP NO. 4 — H/O/A — RUN
INFLUENT PUMP NO. 5 — H/O/A — RUN
INFLUENT PUMP NO. 6 — H/O/A — RUN

PRIMARY PLC (G) BACKUP PLC (G)

INFLUENT PUMP CONTROL PANEL

ALARMS RESET — OIT

TO SHEET LCK-I-2

LCK-I-2
LCK-I-2

LT 1 / LE 1
LT 2 / LE 2

WET WELL

FS2 HIGH-HIGH LEVEL FLOAT SWITCH

FS1 HIGH LEVEL FLOAT SWITCH

LSH 3A / TSH 3A	LSH 4A / TSH 4A	
LSH 2A / TSH 2A	LSH 5A / TSH 5A	
LSH 1A / TSH 1A	LSH 6A / TSH 6A	

M — XX"-DIP

INFLUENT DISCHARGE ← XX"-DIP XX"-DIP

XX"-DIP XX"-DIP → INFLUENT DISCHARGE

FOR INTERIM REVIEW ONLY NOT INTENDED FOR PERMIT, BIDDING OR CONSTRUCTION PURPOSES.
ENGINEER:
HOSS FOROUZAN
P.E. SERIAL NO.77748
12/15/2025

GAI
Gupta & Associates, Inc.
CONSULTING ENGINEERING
Registration No. F-2593
302 Dennis St.,
Houston, Texas 77006
Tel: 713-636-2936
Fax: 713-636-2987
email: hforouzan@gaiconsulting.com

IDS Engineering Group
13430 NW. Freeway
Suite 700
Houston, Tx. 77040
713.462.3178
TxEng Firm 2726
TxSurv Firm 10110700

CITY OF HOUSTON
HOUSTON PUBLIC WORKS

LIFT STATION RENEWAL AND REPLACEMENT FY 2023

LOCKWOOD LIFT STATION P&ID DIAGRAM–I

WBS NUMBER	FOR CITY OF HOUSTON USE ONLY
R-000267-0179-4	
DRAWING SCALE	
HORIZ: VERT:	
CITY OF HOUSTON PM	
NAWARAJ PANTA, P.E.	
SHEET NO. 51 OF 321	

DWG. NO. LCK–I–1

NO.	DATE	REVISION	APP.

FILE PATH: O:\H8108_Lift Station Rehabilitation And Reconstruction (IDS)\6 Drawings\Instrumentation And Control\Working\Lockwood\H8108_LCK–I–01.dwg

IDS JOB No. 0057-085-00

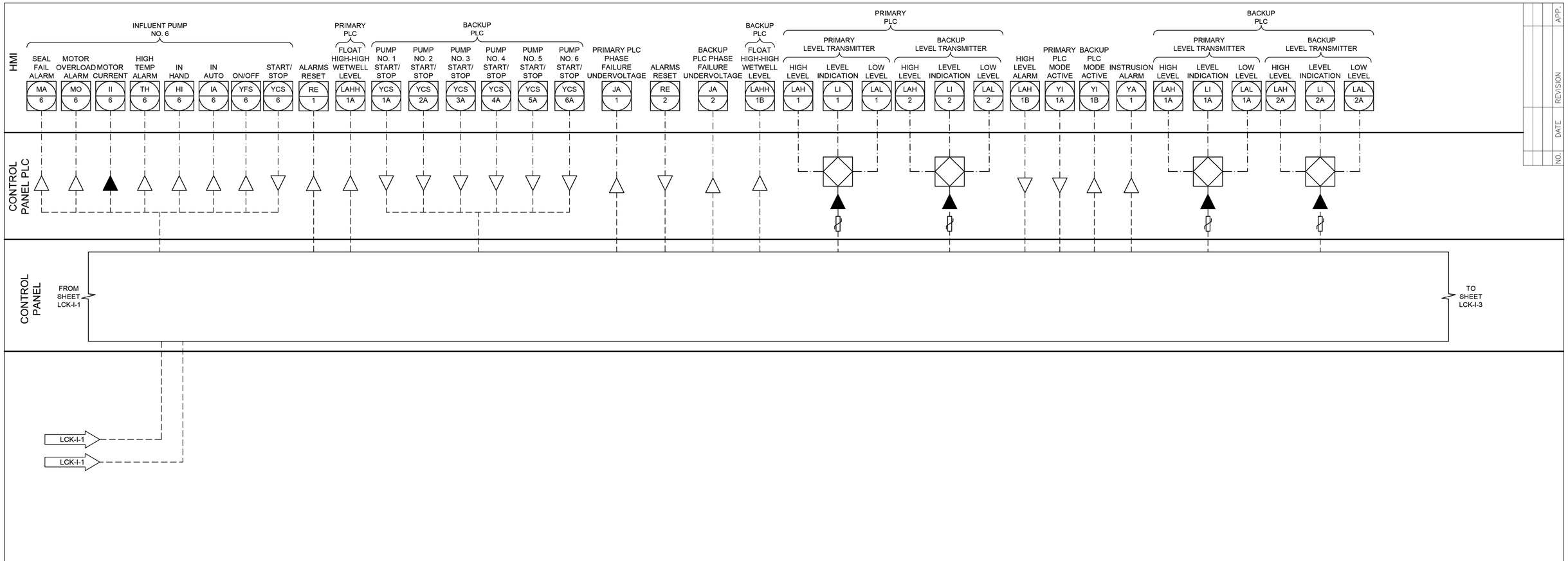

NO.	DATE	REVISION	APP.

FOR INTERIM REVIEW
ONLY NOT INTENDED FOR
PERMIT, BIDDING OR
CONSTRUCTION PURPOSES.
ENGINEER:
HOSS FOROUZAN
P.E. SERIAL NO.77748
12/15/2025

GAI
Gupta & Associates, Inc.
CONSULTING ENGINEERING
Registration No. F-2593
302 Dennis St.,
Houston, Texas 77006
Tel: 713-636-2936
Fax: 713-636-2987
email: hforouzan@gaiconsulting.com

IDS Engineering Group
13430 NW. Freeway
Suite 700
Houston, Tx. 77040
713.462.3178
TxEng Firm 2726
TxSurv Firm 10110700

CITY OF HOUSTON
HOUSTON PUBLIC WORKS

LIFT STATION RENEWAL
AND REPLACEMENT FY 2023

LOCKWOOD LIFT STATION
P&ID DIAGRAM–II

WBS NUMBER	FOR CITY OF HOUSTON USE ONLY
R-000267-0179-4	
DRAWING SCALE	
HORIZ: VERT:	
CITY OF HOUSTON PM	
NAWARAJ PANTA, P.E.	
SHEET NO. 52 OF 321	

DWG. NO.
LCK–I–2

IDS JOB No. 0057-085-00

PLOTTED: 12/11/2025 8:19 PM

FILE PATH: O:\H8108_Lift Station Rehabilitation And Reconstruction (IDS)\6 Drawings\Instrumentation And Control\Working\Lockwood\H8108_LCK-I-02.dwg

PLOTTED: 12/11/2025 8:19 PM

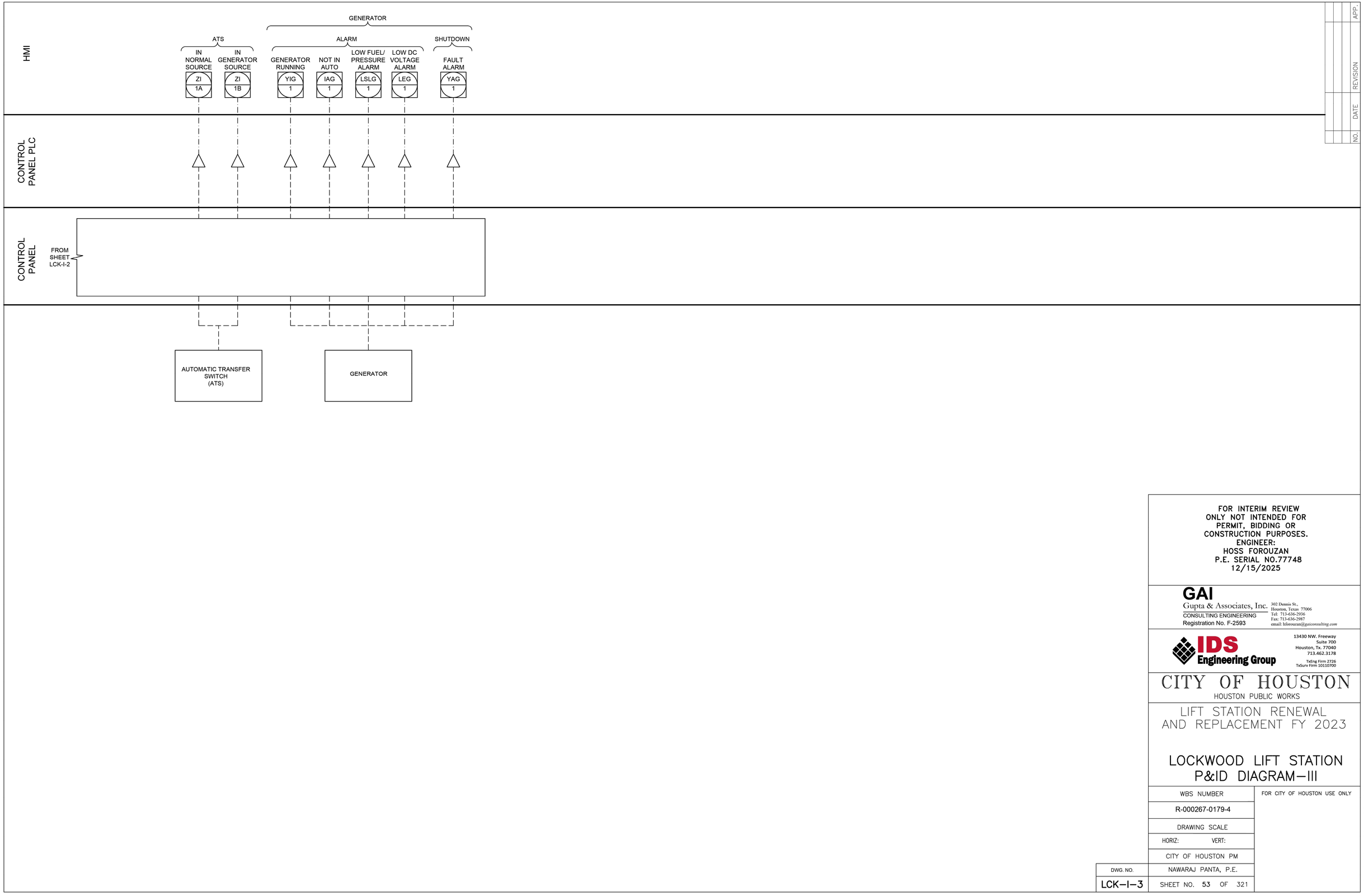

NO.	DATE	REVISION	APP.

FOR INTERIM REVIEW
ONLY NOT INTENDED FOR
PERMIT, BIDDING OR
CONSTRUCTION PURPOSES.
ENGINEER:
HOSS FOROUZAN
P.E. SERIAL NO.77748
12/15/2025

GAI
Gupta & Associates, Inc.
CONSULTING ENGINEERING
Registration No. F-2593
302 Dennis St.,
Houston, Texas 77006
Tel: 713-636-2936
Fax: 713-636-2987
email: hforouzan@gaiconsulting.com

IDS Engineering Group
13430 NW. Freeway
Suite 700
Houston, Tx. 77040
713.462.3178
TxEng Firm 2726
TxSurv Firm 10110700

CITY OF HOUSTON
HOUSTON PUBLIC WORKS

LIFT STATION RENEWAL AND REPLACEMENT FY 2023

LOCKWOOD LIFT STATION P&ID DIAGRAM–III

WBS NUMBER	FOR CITY OF HOUSTON USE ONLY
R-000267-0179-4	
DRAWING SCALE	
HORIZ: VERT:	
CITY OF HOUSTON PM	
NAWARAJ PANTA, P.E.	
SHEET NO. 53 OF 321	

DWG. NO.
LCK–I–3

FILE PATH: O:\H8108_Lift Station Rehabilitation And Reconstruction (IDS)\6 Drawings\Instrumentation And Control\Working\Lockwood\H8108_LCK-I-03.dwg

IDS JOB No. 0057-085-00

PLOTTED: 12/11/2025 8:19 PM

FILE PATH: O:\H8108_Lift Station Rehabilitation And Reconstruction (IDS)\6 Drawings\Instrumentation And Control\Working\Lockwood\H8108_LCK-I-04.dwg

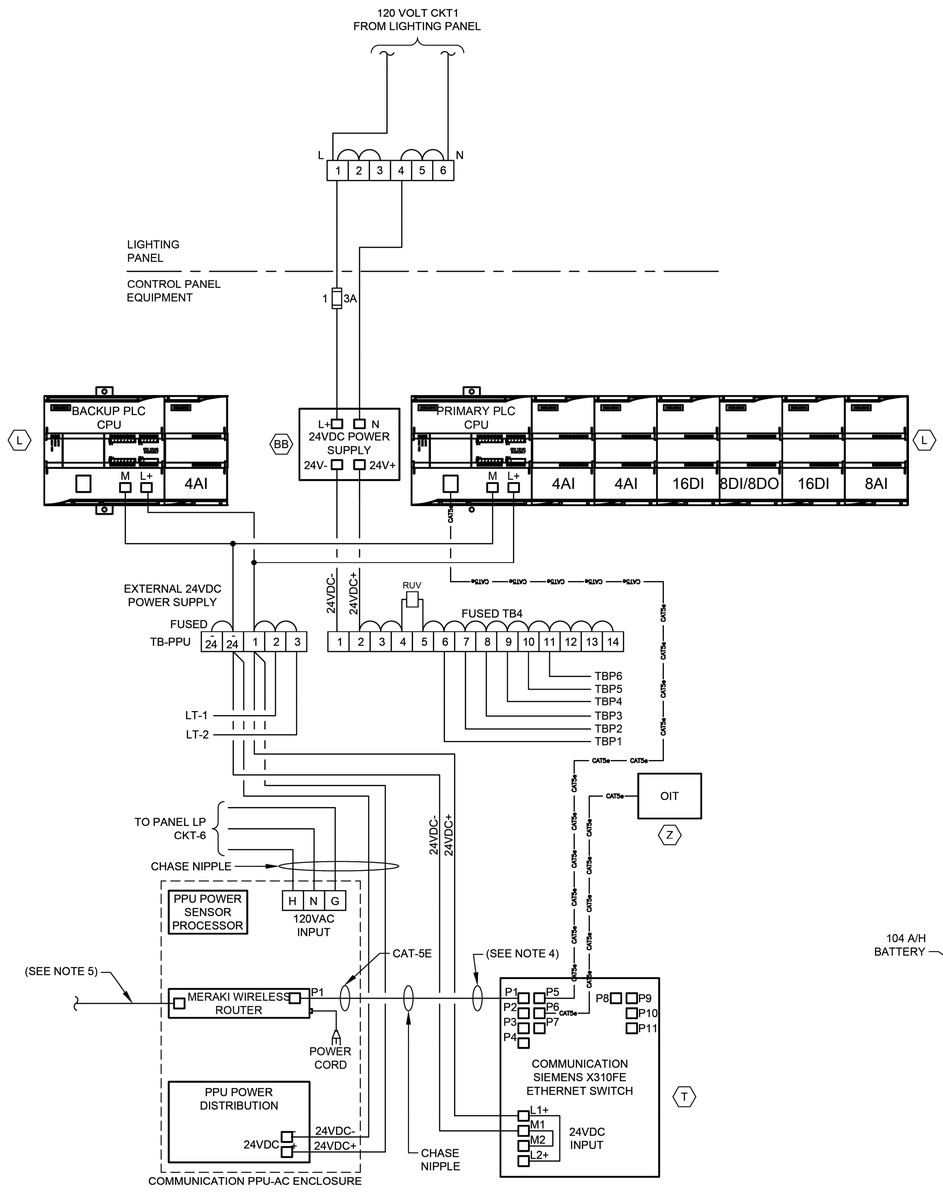

CONTROL POWER &
COMMUNICATIONS WIRING
DIAGRAM
NTS
(SEE NOTE 2 & 6)

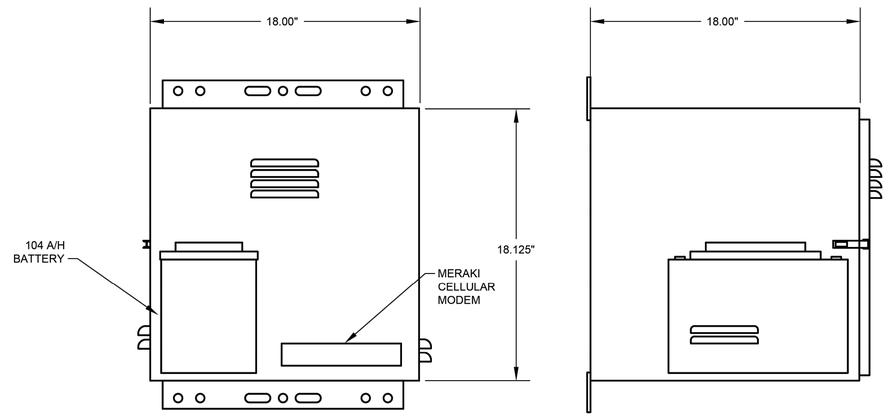

PPU-AC ENCLOSURE
FRONT VIEW

PPU-AC ENCLOSURE
SIDE VIEW

PPU-AC
CONTROL ENCLOSURE
ELEVATION
NTS
(SEE NOTE 7)

NOTES:

1. FOR DESCRIPTION AND RATINGS OF ITEMS INDICATED WITH ITEM TAG, SEE DEVICE RATINGS SCHEDULE.
2. REFER TO SPEC SECTION 16120 FOR CONDUCTOR COLOR CODE.
3. THE PLC POWER SUPPLY SHALL FEED THE 24VDC I/O.
4. ETHERNET CABLE FOR MERAKI CELLULAR ROUTER (P1).
5. POE CABLE TO RADIO.
6. COMMUNICATION PPU-AC & SCADA SHALL BE PROVIDED BY CONTRACTOR INCLUDING TO RUN CONDUITS & WIRES.
7. COORDINATE WITH VENDOR TO PROVIDE PROPER VENTILATION WHERE APPLICABLE.

GENERAL NOTES:

1. NO ELECTRICAL MATERIAL, APPARATUS, DEVICES, APPLIANCES, FIXTURES, OR EQUIPMENT SHALL BE SOLD OR INSTALLED IN THE CITY UNLESS THEY ARE IN CONFORMANCE WITH THE PROVISIONS OF SECTION 508 CITY OF HOUSTON ELECTRICAL CODE, THE LAWS OF THE STATE OF TEXAS AND ANY APPLICABLE RULES AND REGULATIONS ISSUED UNDER THE AUTHORITY OF THE STATE STATUES. THE MAKER'S NAME, TRADEMARK, OR OTHER IDENTIFICATION SYMBOL SHALL BE PLACED ON ALL ELECTRICAL MATERIALS, APPARATUS, DEVICES, APPLIANCES, FIXTURES, AND EQUIPMENT USED OR INSTALLED UNDER THE PROVISIONS OF THIS CODE. ALL ELECTRICAL MATERIALS AND EQUIPMENT SHALL BE LISTED AND LABELED FOR THE INTENDED USE AND SHALL BE INCLUDED IN A LIST PUBLISHED BY AN APPROVAL AGENCY.

NO.	DATE	REVISION	APP.

FOR INTERIM REVIEW
ONLY NOT INTENDED FOR
PERMIT, BIDDING OR
CONSTRUCTION PURPOSES.
ENGINEER:
HOSS FOROUZAN
P.E. SERIAL NO.77748
12/15/2025

GAI
Gupta & Associates, Inc.
CONSULTING ENGINEERING
Registration No. F-2593
302 Dennis St.,
Houston, Texas 77006
Tel: 713-636-2936
Fax: 713-636-2987
email: hforouzan@gaiconsulting.com

IDS Engineering Group
13430 NW. Freeway
Suite 700
Houston, Tx. 77040
713.462.3178
TxEng Firm 2726
TxSurv Firm 10110700

CITY OF HOUSTON
HOUSTON PUBLIC WORKS

LIFT STATION RENEWAL
AND REPLACEMENT FY 2023

LOCKWOOD LIFT STATION COMMUNICATION DIAGRAM

WBS NUMBER	FOR CITY OF HOUSTON USE ONLY
R-000267-0179-4	
DRAWING SCALE	
HORIZ: VERT:	
CITY OF HOUSTON PM	
NAWARAJ PANTA, P.E.	
SHEET NO. 54 OF 321	

DWG. NO.
LCK-I-4

IDS JOB No. 0057-085-00

PLOTTED: 12/11/2025 8:19 PM

EQUIPMENT AND DEVICE SCHEDULE

ITEM	QUANTITY	DESCRIPTION
A	1	SINGLE CHANNEL INTRINSICALLY SAFE RELAY
B	2	ANALOG SIGNAL ISOLATOR
C	6	PUMP PROTECTION MODULE
D	*	NOT USED
E	6	HAND-OFF-AUTO SWITCH, 3 POSITION, HEAVY-DUTY OIL TIGHT WITH 2 SETS OF CONTACT BLOCKS (PUMP CONTROL)
F	6	INDICATING LIGHT, HEAVY DUTY, OILTIGHT, RED, 24 VDC, LED, WITH "RUN" LEGEND
G	*	NOT USED.
H	1	SWITCH FOR CABINET LIGHT, 120V, 20A, SPST
I	2	DUPLEX RECEPTACLE, 120V, 20A, 2 WIRE, GROUNDED, GFCI TYPE
J	1	24" LED STRIP LIGHT 120V SUITABLE FOR ZERO DEGREE OPERATION.
K	*	NAMEPLATES, SEE SPECIFICATIONS (SEE NAMEPLATE SCHEDULE)
L	2	PROGRAMMABLE LOGIC CONTROLLER WITH EXPANSION UNIT
M	*	CONTROL RELAY 24VDC RELAY WITH THREE FORM C CONTACTS AND 11 PIN SOCKET BASE
N	-	NOT USED
O	-	NOT USED
P	1	NEMA 12 GASKETED STEEL ENCLOSURES WITHOUT VENTS 72" H X 20" D X 72" W
Q	*	TERMINAL BLOCK
R	1	WIRE DUCT 2" WIDE X 2" DEEP MINIMUM
S	1	GROUND BUS
T	1	COMMUNICATION ETHERNET SWITCH
U	9	CARTRIDGE
V	1	PUSHBUTTON, BLACK WITH RESET LEGEND
W	-	NOT USED
X	*	FUSED TERMINAL BLOCKS
Y	1	POWER SURGE PROTECTOR - CONTROL POWER
Z	1	PROGRAMMING SCREEN (OIT)
AA	*	120VAC SYSTEM FUSES
BB	1	120VAC - 24VDC POWER SUPPLY, 5A
CC	*	NOT USED
DD	2	INDICATING LIGHT, HEAVY DUTY, OILTIGHT, GREEN, 24VDC, LED WITH "BACKUP PLC" & "PRIMARY PLC" LEGEND
EE	2	ANALOG I/O SURGE SUPPRESSOR
FF	-	NOT USED

* - AS SCHEDULED

NAMEPLATE SCHEDULE

DESIGNATION	ENGRAVED
N1	PUMP STATION DESIGNATION
N2	PUMP NO. 1
N3	PUMP NO. 2
N4	PUMP NO. 3
N5	PUMP NO. 4
N6	PUMP NO. 5
N7	PUMP NO. 6

DESIGNATION	ENGRAVED
N8	NOT USED.
N9	NOT USED.
N10	PROGRAMMING SCREEN
N11	NOT USED.
N12	PRIMARY PLC
N13	BACKUP PLC
N14	MOTOR DATA HORSEPOWER (OUTPUT) ---------- RPM AT FULL LOAD ---------- TIME RATING ---------- FREQUENCY ---------- NUMBER OF PHASES ---------- MODEL NUMBER ---------- RATED VOLTAGE ---------- SERVICE FACTOR ---------- FULL LOAD AMPS ---------- INSULATION CLAS ---------- NEMA DESIGN LETTER ---------- TEMPERATURE RISE ---------- NEMA FRAME SIZE ---------- DATE OF MANUFACTURE ---------- THERMO PROTECTION (IF REQUIRED) -- MOISTURE PROTECTION (IF REQUIRED)-

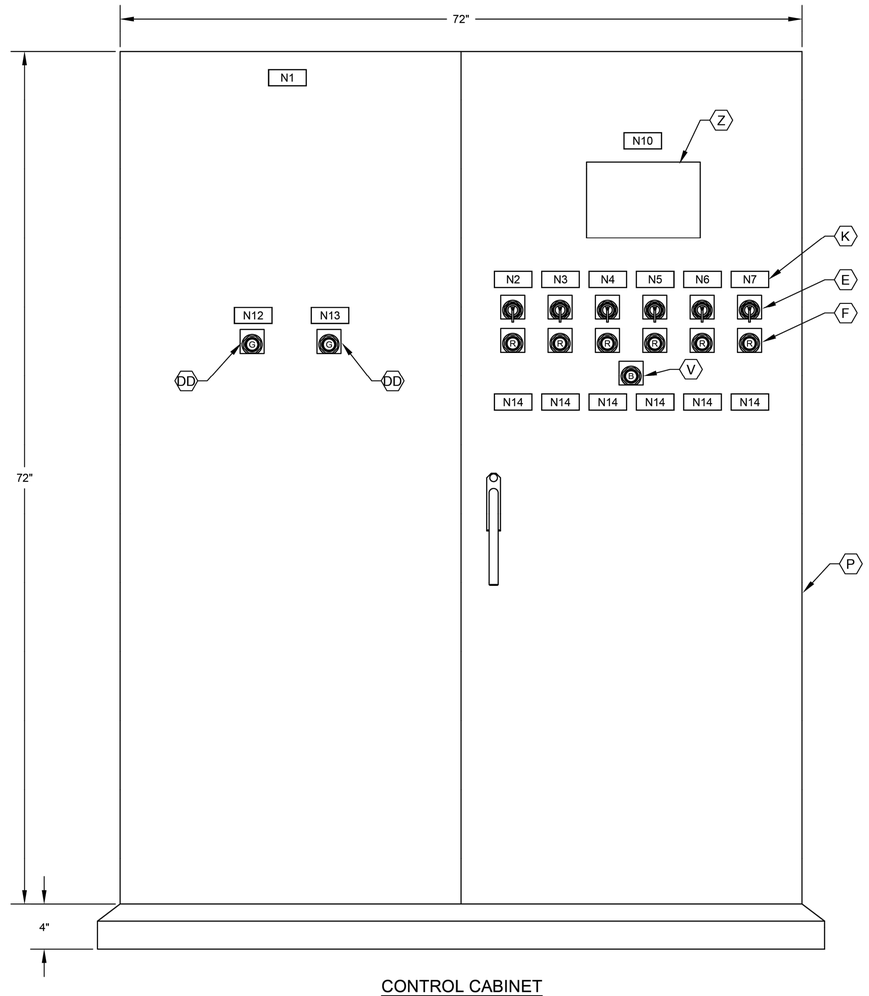

CONTROL CABINET
FRONT DOOR ELEVATION

NOTES:

1. NAMEPLATES SHALL BE MOUNTED TO PANELS USING STAINLESS STEEL HARDWARE.
2. REFER SPECIFICATIONS FOR ALL PANEL COMPONENTS.

GENERAL NOTES:

3. NO ELECTRICAL MATERIAL, APPARATUS, DEVICES, APPLIANCES, FIXTURES, OR EQUIPMENT SHALL BE SOLD OR INSTALLED IN THE CITY UNLESS THEY ARE IN CONFORMANCE WITH THE PROVISIONS OF SECTION 508 CITY OF HOUSTON ELECTRICAL CODE, THE LAWS OF THE STATE OF TEXAS AND ANY APPLICABLE RULES AND REGULATIONS ISSUED UNDER THE AUTHORITY OF THE STATE STATUES. THE MAKER'S NAME, TRADEMARK, OR OTHER IDENTIFICATION SYMBOL SHALL BE PLACED ON ALL ELECTRICAL MATERIALS, APPARATUS, DEVICES, APPLIANCES, FIXTURES, AND EQUIPMENT USED OR INSTALLED UNDER THE PROVISIONS OF THIS CODE. ALL ELECTRICAL MATERIALS AND EQUIPMENT SHALL BE LISTED AND LABELED FOR THE INTENDED USE AND SHALL BE INCLUDED IN A LIST PUBLISHED BY AN APPROVAL AGENCY.

NO.	DATE	REVISION	APP.

FOR INTERIM REVIEW
ONLY NOT INTENDED FOR
PERMIT, BIDDING OR
CONSTRUCTION PURPOSES.
ENGINEER:
HOSS FOROUZAN
P.E. SERIAL NO.77748
12/15/2025

GAI
Gupta & Associates, Inc.
CONSULTING ENGINEERING
Registration No. F-2593
302 Dennis St.,
Houston, Texas 77006
Tel: 713-636-2936
Fax: 713-636-2987
email: hforouzan@gaiconsulting.com

IDS Engineering Group
13430 NW. Freeway
Suite 700
Houston, Tx. 77040
713.462.3178
TxEng Firm 2726
TxSurv Firm 10110700

CITY OF HOUSTON
HOUSTON PUBLIC WORKS

LIFT STATION RENEWAL
AND REPLACEMENT FY 2023

LOCKWOOD LIFT STATION
CONTROL PANEL
EQUIP. LAYOUT & SCHEDULE

WBS NUMBER	FOR CITY OF HOUSTON USE ONLY
R-000267-0179-4	
DRAWING SCALE	
HORIZ: VERT:	
CITY OF HOUSTON PM	
NAWARAJ PANTA, P.E.	
SHEET NO. 55 OF 321	

DWG. NO. LCK–I–5

IDS JOB No. 0057-085-00

FILE PATH: O:\H8108_Lift Station Rehabilitation And Reconstruction (IDS)\6 Drawings\Instrumentation And Control\Working\Lockwood\H8108_LCK–I–05.dwg

PLOTTED: 12/11/2025 8:19 PM

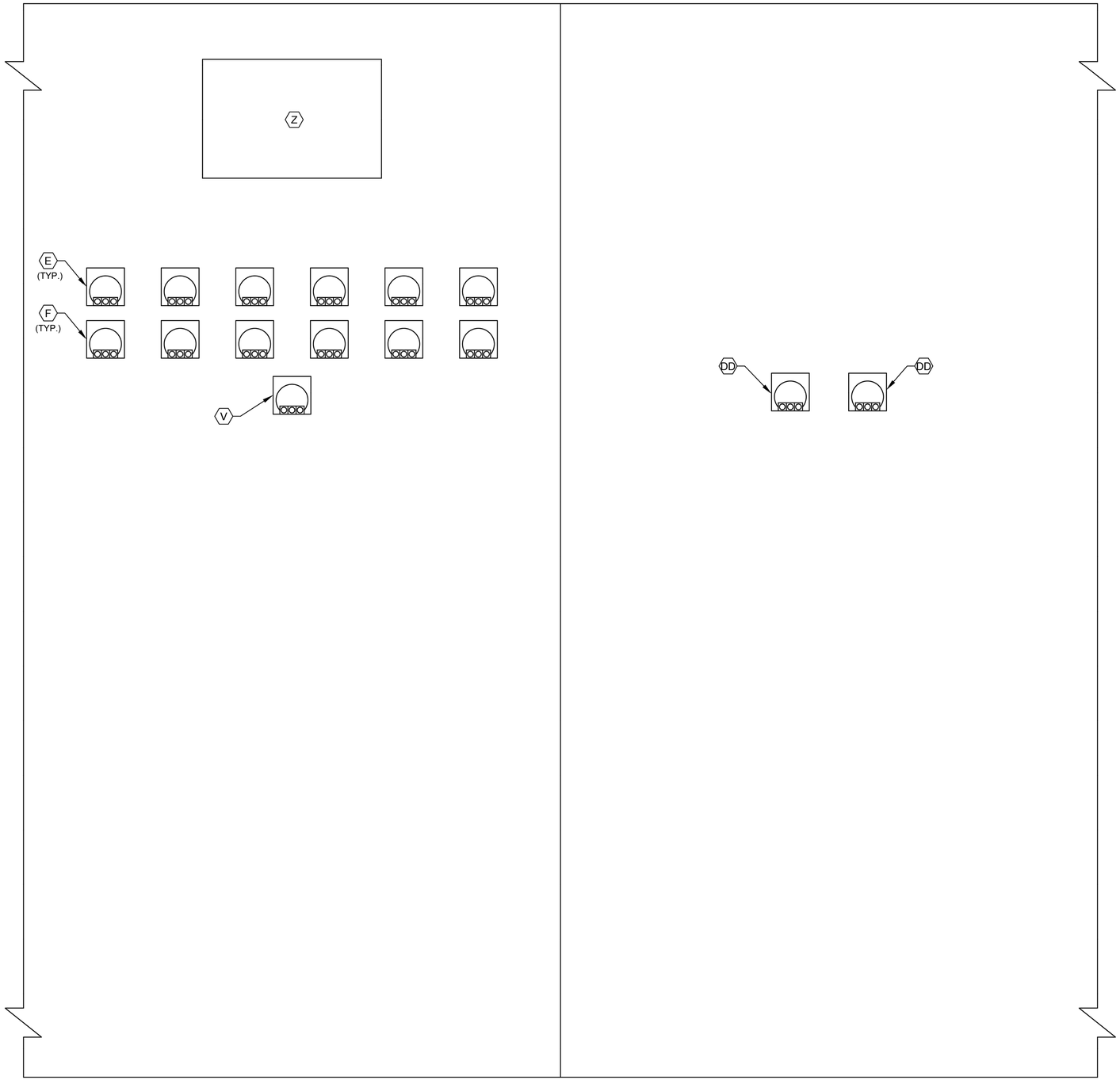

CONTROL CABINET
BACK DOOR ELEVATION

NOTES:

1. SEE SHEET LCK-I-4 FOR EQUIPMENT SCHEDULE.

GENERAL NOTES:

1. NO ELECTRICAL MATERIAL, APPARATUS, DEVICES, APPLIANCES, FIXTURES, OR EQUIPMENT SHALL BE SOLD OR INSTALLED IN THE CITY UNLESS THEY ARE IN CONFORMANCE WITH THE PROVISIONS OF SECTION 508 CITY OF HOUSTON ELECTRICAL CODE, THE LAWS OF THE STATE OF TEXAS AND ANY APPLICABLE RULES AND REGULATIONS ISSUED UNDER THE AUTHORITY OF THE STATE STATUES. THE MAKER'S NAME, TRADEMARK, OR OTHER IDENTIFICATION SYMBOL SHALL BE PLACED ON ALL ELECTRICAL MATERIALS, APPARATUS, DEVICES, APPLIANCES, FIXTURES, AND EQUIPMENT USED OR INSTALLED UNDER THE PROVISIONS OF THIS CODE. ALL ELECTRICAL MATERIALS AND EQUIPMENT SHALL BE LISTED AND LABELED FOR THE INTENDED USE AND SHALL BE INCLUDED IN A LIST PUBLISHED BY AN APPROVAL AGENCY.

NO.	DATE	REVISION	APP.

FOR INTERIM REVIEW
ONLY NOT INTENDED FOR
PERMIT, BIDDING OR
CONSTRUCTION PURPOSES.
ENGINEER:
HOSS FOROUZAN
P.E. SERIAL NO.77748
12/15/2025

GAI
Gupta & Associates, Inc.
CONSULTING ENGINEERING
Registration No. F-2593
302 Dennis St.,
Houston, Texas 77006
Tel: 713-636-2936
Fax: 713-636-2987
email: hforouzan@gaiconsulting.com

IDS Engineering Group
13430 NW. Freeway
Suite 700
Houston, Tx. 77040
713.462.3178
TxEng Firm 2726
TxSurv Firm 10110700

CITY OF HOUSTON
HOUSTON PUBLIC WORKS

LIFT STATION RENEWAL
AND REPLACEMENT FY 2023

LOCKWOOD LIFT STATION
CONTROL PANEL
BACK PANEL ELEVATION

WBS NUMBER	FOR CITY OF HOUSTON USE ONLY
R-000267-0179-4	
DRAWING SCALE	
HORIZ: VERT:	
CITY OF HOUSTON PM	
NAWARAJ PANTA, P.E.	
SHEET NO. 56 OF 321	

DWG. NO.
LCK–I–6

IDS JOB No. 0057-085-00

FILE PATH: O:\H8108_Lift Station Rehabilitation And Reconstruction (IDS)\6 Drawings\Instrumentation And Control\Working\Lockwood\H8108_LCK-I-06.dwg

PLOTTED: 12/11/2025 8:19 PM

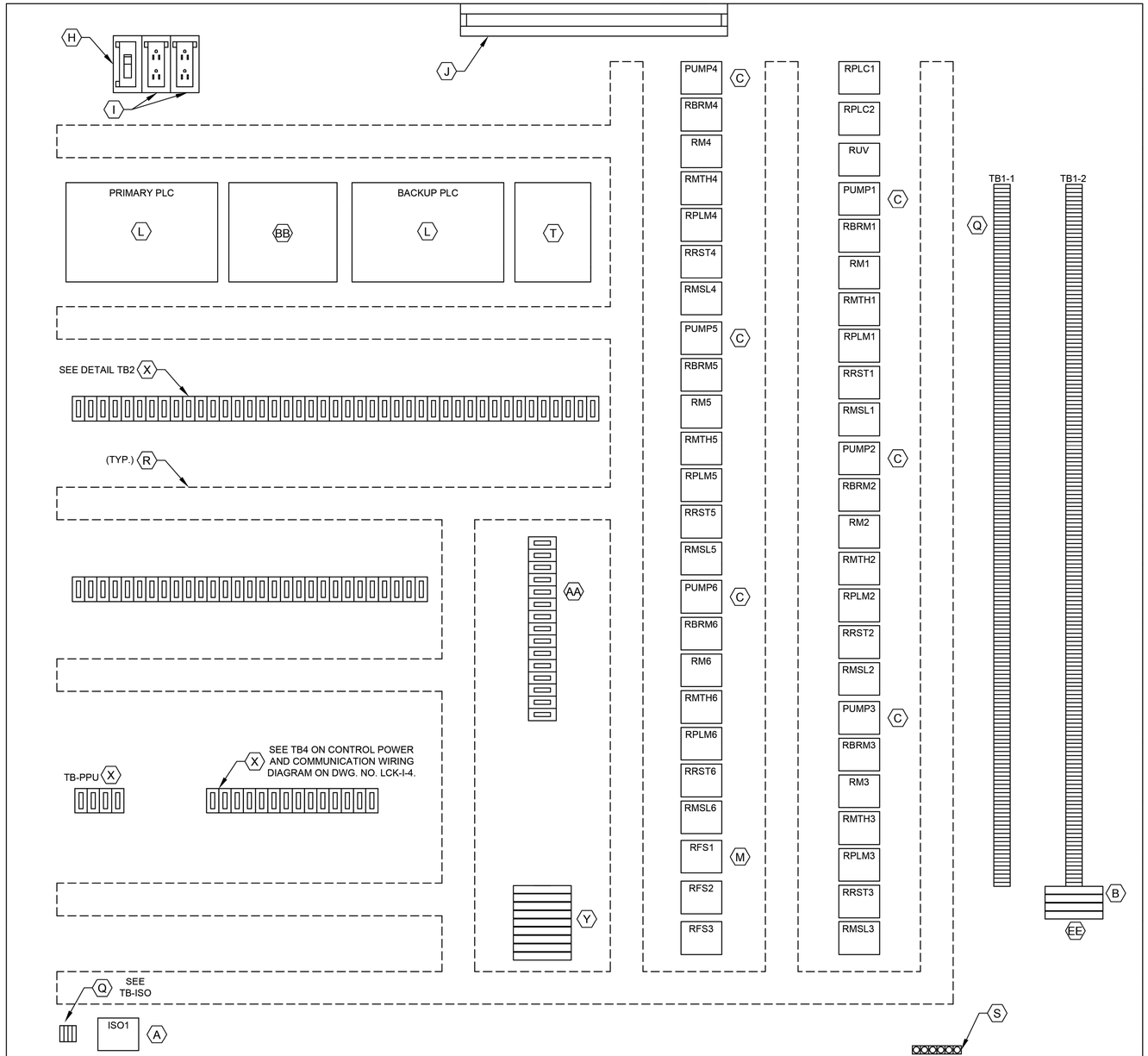

CONTROL PANEL ELEVATION

LEGEND	
TAG	DESCRIPTION
RMTH	MOTOR HIGH TEMPERATURE ALARM RELAY
RPLMP	PLC PUMP RUN RELAY
RRST	PUMP RESET AUX RELAY
RPLC	PLC MODE AUX RELAY
RM	PUMP RUN AUX RELAY
RUV	UNDER VOLTAGE RELAY
RBRM	BACKUP SYSTEM RUN RELAY
ISO	INTRINSICALLY SAFE RELAY
RFS	PUMP RUN FLOAT SWITCH RELAY
RMSL	MOTOR SEAL LEAK ALARM RELAY
RFLP	FLOAT LOCKOUT PUMP RELAY

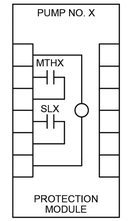

PUMP PROTECTION MODULE DETAIL, ITEM C

NOTE: REPLACE "X" WITH APPROPRIATE PUMP NO.

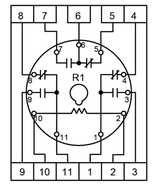

RELAY DETAIL ITEM M

NOTES:

1. SEE SHEET LCK-I-5 FOR EQUIPMENT SCHEDULE.

GENERAL NOTES:

1. NO ELECTRICAL MATERIAL, APPARATUS, DEVICES, APPLIANCES, FIXTURES, OR EQUIPMENT SHALL BE SOLD OR INSTALLED IN THE CITY UNLESS THEY ARE IN CONFORMANCE WITH THE PROVISIONS OF SECTION 508 CITY OF HOUSTON ELECTRICAL CODE, THE LAWS OF THE STATE OF TEXAS AND ANY APPLICABLE RULES AND REGULATIONS ISSUED UNDER THE AUTHORITY OF THE STATE STATUES. THE MAKER'S NAME, TRADEMARK, OR OTHER IDENTIFICATION SYMBOL SHALL BE PLACED ON ALL ELECTRICAL MATERIALS, APPARATUS, DEVICES, APPLIANCES, FIXTURES, AND EQUIPMENT USED OR INSTALLED UNDER THE PROVISIONS OF THIS CODE. ALL ELECTRICAL MATERIALS AND EQUIPMENT SHALL BE LISTED AND LABELED FOR THE INTENDED USE AND SHALL BE INCLUDED IN A LIST PUBLISHED BY AN APPROVAL AGENCY.

DETAIL TB-ISO
1500
1501
1503
1504

DETAIL TB1-1
L1A
L1N
SPARE
3
3N
SPARE
49
50
51
52
53
54
1004
1
24V-
24V-
SPARE
1002
2
11
1001
1001A
12
1003
1003A
34
3N
SPARE
SPARE
102
103
3P1
109
110
112
116
117
120
121
122
123
124
125
126
127
SPARE
SPARE
202
203
3P2
209
210
212
216
217
220
221
222
223
224
225
226
227

DETAIL TB1-2
SPARE
SPARE
302
303
3P3
309
310
312
316
317
320
321
322
323
324
325
326
327
SPARE
SPARE
402
403
3P4
409
410
412
416
417
420
421
422
423
424
425
426
427
SPARE
SPARE

DETAIL TB1-2
502
503
3P5
509
510
512
516
517
520
521
522
523
524
525
526
527
SPARE
SPARE
602
603
3P6
609
610
612
616
617
620
621
622
623
624
625
626
627

DETAIL TB2
36A
37A
50
52
54
52A
52A
54A
L+
M
35B
38B
41B
44B
SPARE
SPARE
47B
50B
53B
13B
13AB
B
L+
M
14B
14AB
14GB
119
SPARE
L+
M
13
13A
13G
14
14A
14G
1M
2M
1L
3
30
32
34
37
38
41
33B
45
18B
SPARE

DETAIL TB2
100
112
113
114
115
117
118
119
120
121
SPARE
200
212
213
214
215
217
218
219
220
221
SPARE
300
312
313
314
315
317
318
319
320
321
SPARE
400
412
413
414
415
417
418
419
420
421
SPARE

DETAIL TB2
500
512
513
514
515
517
518
519
520
521
SPARE
600
612
613
614
615
617
618
619
620
621
SPARE

FOR INTERIM REVIEW ONLY NOT INTENDED FOR PERMIT, BIDDING OR CONSTRUCTION PURPOSES.
ENGINEER:
HOSS FOROUZAN
P.E. SERIAL NO.77748
12/15/2025

GAI
Gupta & Associates, Inc.
CONSULTING ENGINEERING
Registration No. F-2593
302 Dennis St.,
Houston, Texas 77006
Tel: 713-636-2916
Fax: 713-636-2987
email: hforouzan@gaiconsulting.com

IDS Engineering Group
13430 NW. Freeway
Suite 700
Houston, Tx. 77040
713.462.3178
TxEng Firm 2726
TxSurv Firm 10110700

CITY OF HOUSTON
HOUSTON PUBLIC WORKS

LIFT STATION RENEWAL AND REPLACEMENT FY 2023

LOCKWOOD LIFT STATION CONTROL PANEL EQUIPMENT LAYOUT

WBS NUMBER	FOR CITY OF HOUSTON USE ONLY
R-000267-0179-4	
DRAWING SCALE	
HORIZ: VERT:	
CITY OF HOUSTON PM	
NAWARAJ PANTA, P.E.	
DWG. NO. LCK–I–7	SHEET NO. 57 OF 321

NO.	DATE	REVISION	APP.

FILE PATH: O:\H8108_Lift Station Rehabilitation And Reconstruction (IDS)\6 Drawings\Instrumentation And Control\Working\Lockwood\H8108_LCK-I-07.dwg

IDS JOB No. 0057-085-00

PLOTTED: 12/11/2025 8:19 PM

FILE PATH: O:\H8108_Lift Station Rehabilitation And Reconstruction (IDS)\6 Drawings\Instrumentation And Control\Working\Lockwood\H8108_LCK-I-08.dwg

NO.	DATE	REVISION	APP.

FIELD

CONTROL PANEL

DOOR

INTERIOR PANEL

PLC

120 VAC POWER

L1

L1A

L1N

JE-100B CONTROL POWER SURGE PROTECTOR (Y)

24VDC

3

3N

RPLC3 11 8

RFS3 6 7

OIT (Z)

BACK UP PLC

36A 50mA I0.1 BACKUP PLC MODE ACTIVE

37A 50mA I0.2 FLOAT HIGH-HIGH LEVEL ALARM ALL PUMPS ON

ZS-1
AUTO TRANSFER SWITCH
CONTACTS SHOWING
SOURCE OF POWER
(SEE NOTE 1)

ZI-1A

ZI-1B

49 50 51 52 53 54

50 50mA I0.4 ATS IN NORMAL SOURCE

52 50mA I0.5 ATS IN EMERGENCY SOURCE

54 50mA I0.7 SPARE

GENERATOR
CONTACTS SHOWING
STATUS AND ALARMS
(SEE NOTE 1)

YIG-1

IAG-1

LSLG-1

LEG-1

YAG-1

55 56 57 58 59 60 61

REMOTE I/O

523 50mA I7.0 GENERATOR RUNNING

524 50mA I7.1 GENERATOR NOT IN AUTO

525 50mA I7.2 GENERATOR LOW FUEL/PRESSURE ALARM

526 50mA I7.3 GENERATOR LOW DC VOLTAGE ALARM

527 50mA I7.4 GENERATOR FAULT SHUTDOWN ALARM

56 58 59 60 61

120V CKT1 FROM
LIGHTING PANEL

L16A 20A RUV 6 7

INTRINSICALLY
SAFE RELAY

ISO 1 (5 6 1 3 4)

RFS1 2 R 10

RFS2 2 R 10

RFS3 2 R 10

LEVEL
TRANSMITTER J-BOX

HIGH LEVEL ALARM
FS1

HIGH-HIGH LEVEL
ALARM
FS2

FLOAT SWITCHES LOCATED
INSIDE WET WELL

1500 1501 1503 1504

RFS1 6 7

RFS1 1 3

52A 50mA I0.2 FLOAT HIGH-HIGH LEVEL ALARM ALL PUMPS ON

54A 50mA I0.3 SPARE

MATCHLINE 1

LEGEND

△ DEVICE OR FIELD TERMINAL LOCATED AT MOTOR

✳ DEVICE OR FIELD TERMINAL LOCATED REMOTE

□ DEVICE OR FIELD TERMINAL LOCATED AT MCC/POWER PANEL

■ FIELD TERMINAL LOCATED AT CONTROL PANEL

▲ REMOTE TERMINAL

● DEVICE TERMINAL NO.

◆ PLC INTERFACE TERMINAL

NOTES:

1. PROVIDE AUTO TRANSFER SWITCH AND GENERATOR DRY CONTACT.
2. ALL FLOAT CONTROL CIRCUIT WIRES COLOR SHALL BE YELLOW.

GENERAL NOTES:

1. NO ELECTRICAL MATERIAL, APPARATUS, DEVICES, APPLIANCES, FIXTURES, OR EQUIPMENT SHALL BE SOLD OR INSTALLED IN THE CITY UNLESS THEY ARE IN CONFORMANCE WITH THE PROVISIONS OF SECTION 508 CITY OF HOUSTON ELECTRICAL CODE, THE LAWS OF THE STATE OF TEXAS AND ANY APPLICABLE RULES AND REGULATIONS ISSUED UNDER THE AUTHORITY OF THE STATE STATUES. THE MAKER'S NAME, TRADEMARK, OR OTHER IDENTIFICATION SYMBOL SHALL BE PLACED ON ALL ELECTRICAL MATERIALS, APPARATUS, DEVICES, APPLIANCES, FIXTURES, AND EQUIPMENT USED OR INSTALLED UNDER THE PROVISIONS OF THIS CODE. ALL ELECTRICAL MATERIALS AND EQUIPMENT SHALL BE LISTED AND LABELED FOR THE INTENDED USE AND SHALL BE INCLUDED IN A LIST PUBLISHED BY AN APPROVAL AGENCY.

FOR INTERIM REVIEW
ONLY NOT INTENDED FOR
PERMIT, BIDDING OR
CONSTRUCTION PURPOSES.
ENGINEER:
HOSS FOROUZAN
P.E. SERIAL NO.77748
12/15/2025

GAI
Gupta & Associates, Inc.
CONSULTING ENGINEERING
Registration No. F-2593
302 Dennis St.,
Houston, Texas 77006
Tel: 713-636-2936
Fax: 713-636-2987
email: hforouzan@gaiconsulting.com

IDS Engineering Group
13430 NW. Freeway
Suite 700
Houston, Tx. 77040
713.462.3178
TxEng Firm 2726
TxSurv Firm 10110700

CITY OF HOUSTON

HOUSTON PUBLIC WORKS

LIFT STATION RENEWAL AND REPLACEMENT FY 2023

LOCKWOOD LIFT STATION CONTROL PANEL CONTROL WIRING DIAGRAM—I

WBS NUMBER	FOR CITY OF HOUSTON USE ONLY
R-000267-0179-4	
DRAWING SCALE	
HORIZ: VERT:	
CITY OF HOUSTON PM	
NAWARAJ PANTA, P.E.	
DWG. NO. LCK—I—8	SHEET NO. 58 OF 321

IDS JOB No. 0057-085-00

PLOTTED: 12/11/2025 8:19 PM

FILE PATH: O:\H8108_Lift Station Rehabilitation And Reconstruction (IDS)\6 Drawings\Instrumentation And Control\Working\Lockwood\H8108_LCK-I-09.dwg

FIELD	MOTOR CONTROL CENTER (INDOOR)	CONTROL PANEL	
		DOOR	INTERIOR PANEL

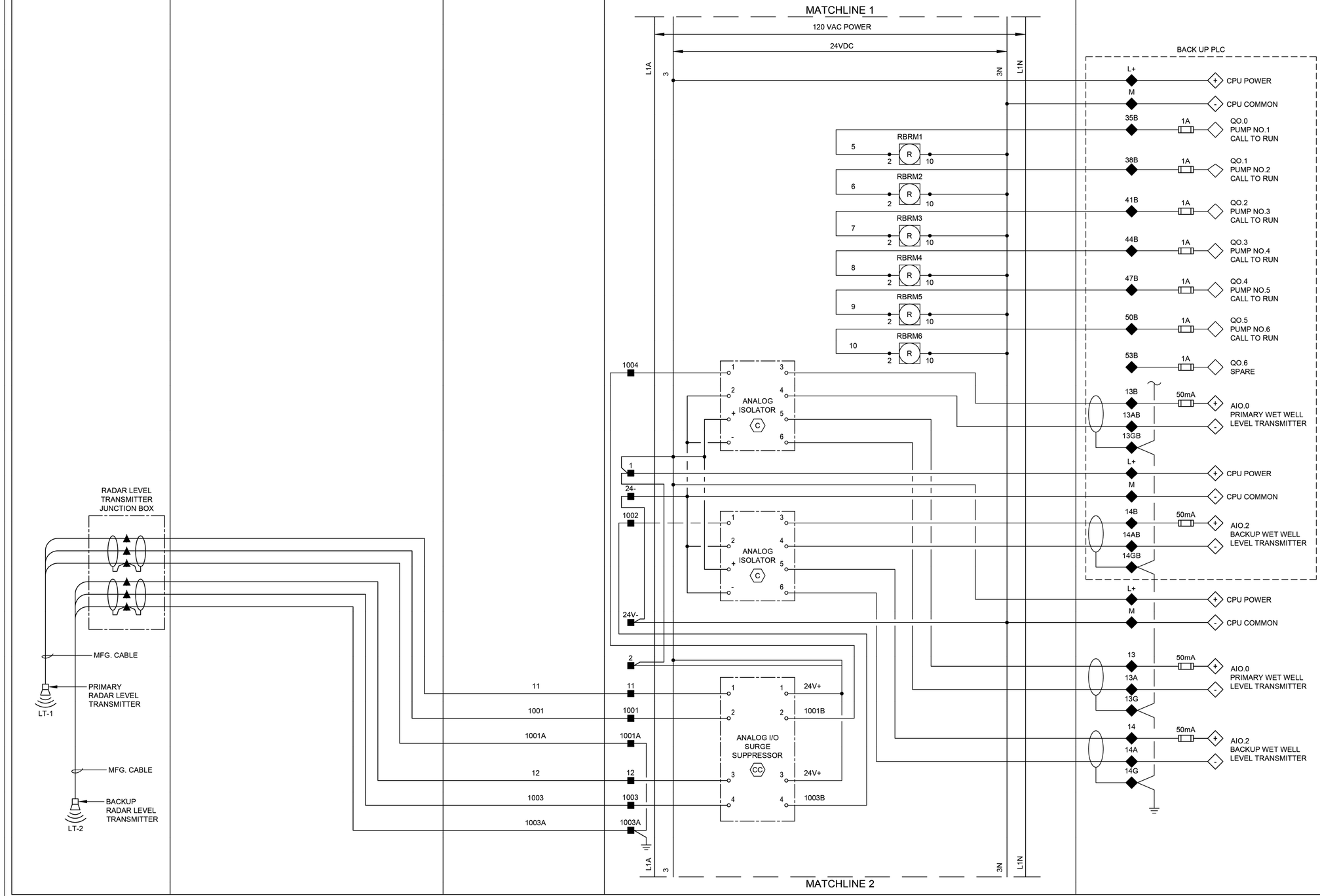

GENERAL NOTES:

1. NO ELECTRICAL MATERIAL, APPARATUS, DEVICES, APPLIANCES, FIXTURES, OR EQUIPMENT SHALL BE SOLD OR INSTALLED IN THE CITY UNLESS THEY ARE IN CONFORMANCE WITH THE PROVISIONS OF SECTION 508 CITY OF HOUSTON ELECTRICAL CODE, THE LAWS OF THE STATE OF TEXAS AND ANY APPLICABLE RULES AND REGULATIONS ISSUED UNDER THE AUTHORITY OF THE STATE STATUES. THE MAKER'S NAME, TRADEMARK, OR OTHER IDENTIFICATION SYMBOL SHALL BE PLACED ON ALL ELECTRICAL MATERIALS, APPARATUS, DEVICES, APPLIANCES, FIXTURES, AND EQUIPMENT USED OR INSTALLED UNDER THE PROVISIONS OF THIS CODE. ALL ELECTRICAL MATERIALS AND EQUIPMENT SHALL BE LISTED AND LABELED FOR THE INTENDED USE AND SHALL BE INCLUDED IN A LIST PUBLISHED BY AN APPROVAL AGENCY.

LEGEND

- △ DEVICE OR FIELD TERMINAL LOCATED AT MOTOR
- ✳ DEVICE OR FIELD TERMINAL LOCATED REMOTE
- □ DEVICE OR FIELD TERMINAL LOCATED AT MCC/POWER PANEL
- ■ FIELD TERMINAL LOCATED AT CONTROL PANEL
- ▲ REMOTE TERMINAL
- ● DEVICE TERMINAL NO.
- ◆ PLC INTERFACE TERMINAL

NO.	DATE	REVISION	APP.

FOR INTERIM REVIEW
ONLY NOT INTENDED FOR
PERMIT, BIDDING OR
CONSTRUCTION PURPOSES.
ENGINEER:
HOSS FOROUZAN
P.E. SERIAL NO.77748
12/15/2025

GAI
Gupta & Associates, Inc.
CONSULTING ENGINEERING
Registration No. F-2593
302 Dennis St.,
Houston, Texas 77006
Tel: 713-636-2936
Fax: 713-636-2987
email: hforouzan@gaiconsulting.com

IDS Engineering Group
13430 NW. Freeway
Suite 700
Houston, Tx. 77040
713.462.3178
TxEng Firm 2726
TxSurv Firm 10110700

CITY OF HOUSTON
HOUSTON PUBLIC WORKS

LIFT STATION RENEWAL AND REPLACEMENT FY 2023

LOCKWOOD LIFT STATION CONTROL PANEL CONTROL WIRING DIAGRAM—II

WBS NUMBER	FOR CITY OF HOUSTON USE ONLY
R-000267-0179-4	
DRAWING SCALE	
HORIZ: VERT:	
CITY OF HOUSTON PM	
NAWARAJ PANTA, P.E.	

DWG. NO.	SHEET NO.
LCK—I—9	59 OF 321

IDS JOB No. 0057-085-00

PLOTTED: 12/11/2025 8:19 PM

FILE PATH: O:\H8108_Lift Station Rehabilitation And Reconstruction (IDS)\6 Drawings\Instrumentation And Control\Working\Lockwood\H8108_LCK-I-10.dwg

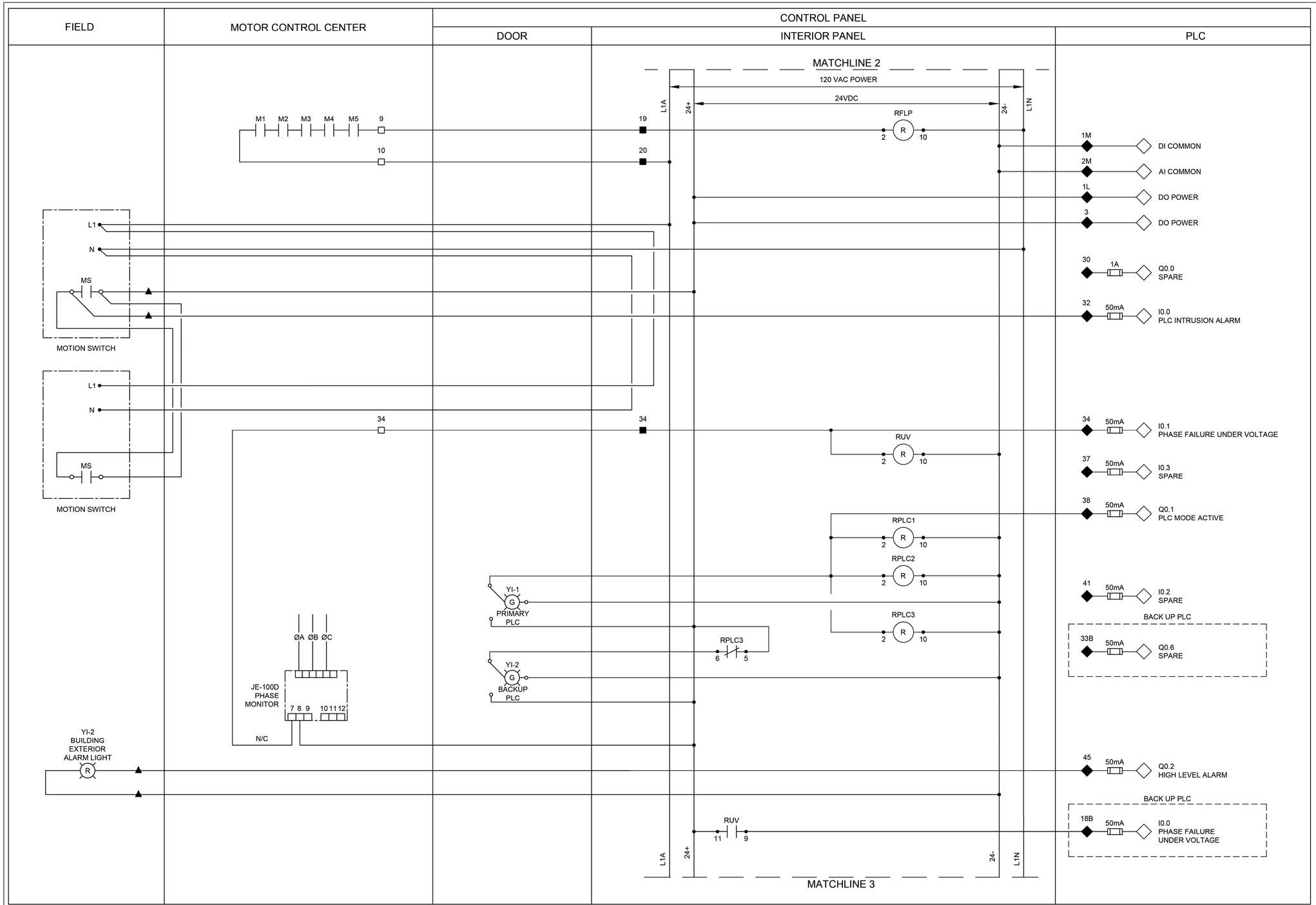

LEGEND

- △ DEVICE OR FIELD TERMINAL LOCATED AT MOTOR
- ✳ DEVICE OR FIELD TERMINAL LOCATED REMOTE
- □ DEVICE OR FIELD TERMINAL LOCATED AT MCC/POWER PANEL
- ■ FIELD TERMINAL LOCATED AT CONTROL PANEL
- ▲ REMOTE TERMINAL
- ● DEVICE TERMINAL NO.
- ◆ PLC INTERFACE TERMINAL

GENERAL NOTES:

1. NO ELECTRICAL MATERIAL, APPARATUS, DEVICES, APPLIANCES, FIXTURES, OR EQUIPMENT SHALL BE SOLD OR INSTALLED IN THE CITY UNLESS THEY ARE IN CONFORMANCE WITH THE PROVISIONS OF SECTION 508 CITY OF HOUSTON ELECTRICAL CODE, THE LAWS OF THE STATE OF TEXAS AND ANY APPLICABLE RULES AND REGULATIONS ISSUED UNDER THE AUTHORITY OF THE STATE STATUES. THE MAKER'S NAME, TRADEMARK, OR OTHER IDENTIFICATION SYMBOL SHALL BE PLACED ON ALL ELECTRICAL MATERIALS, APPARATUS, DEVICES, APPLIANCES, FIXTURES, AND EQUIPMENT USED OR INSTALLED UNDER THE PROVISIONS OF THIS CODE. ALL ELECTRICAL MATERIALS AND EQUIPMENT SHALL BE LISTED AND LABELED FOR THE INTENDED USE AND SHALL BE INCLUDED IN A LIST PUBLISHED BY AN APPROVAL AGENCY.

NO.	DATE	REVISION	APP.

FOR INTERIM REVIEW
ONLY NOT INTENDED FOR
PERMIT, BIDDING OR
CONSTRUCTION PURPOSES.
ENGINEER:
HOSS FOROUZAN
P.E. SERIAL NO.77748
12/15/2025

GAI
Gupta & Associates, Inc.
CONSULTING ENGINEERING
Registration No. F-2593
302 Dennis St.,
Houston, Texas 77006
Tel: 713-636-2936
Fax: 713-636-2987
email: hforouzan@gaiconsulting.com

IDS Engineering Group
13430 NW. Freeway
Suite 700
Houston, Tx. 77040
713.462.3178
TxEng Firm 2726
TxSurv Firm 10110700

CITY OF HOUSTON
HOUSTON PUBLIC WORKS

LIFT STATION RENEWAL
AND REPLACEMENT FY 2023

LOCKWOOD LIFT STATION
CONTROL PANEL
CONTROL WIRING DIAGRAM—III

WBS NUMBER	FOR CITY OF HOUSTON USE ONLY
R-000267-0179-4	
DRAWING SCALE	
HORIZ: VERT:	
CITY OF HOUSTON PM	
NAWARAJ PANTA, P.E.	
SHEET NO. 60 OF 321	

DWG. NO. LCK—I—10

IDS JOB No. 0057-085-00

PLOTTED: 12/11/2025 8:19 PM

FILE PATH: O:\H8108_Lift Station Rehabilitation And Reconstruction (IDS)\6 Drawings\Instrumentation And Control\Working\Lockwood\H8108_LCK-I-11.dwg

FIELD | MOTOR CONTROL CENTER | CONTROL PANEL — DOOR | INTERIOR PANEL | PLC

PUMP NO.1 M
T1 T2 T3 G
A B C
4-20mA CURRENT TRANSDUCER
Aϕ Bϕ Cϕ CT
M
SSRV1
MCP
MCC CKT 2
1A 1A
CPT - 480-120VAC 1PH, 250VA MIN
X1-1 X2-1
3A
TDLP1 TD 2 10
HS-1B SS BYP.
SSCR1
X0 CR1 0X X0
M1 MOR1
TDLP1F TD 2 10
TDLP1F 1 3
SSCR1 R 2 10
SSRVR1 R 2 10
SSRV NO. 1 CONTROLLER BOARD
RUN
START/ STOP
FAULT
CR1
IE-1 MOTOR OVERLOAD RELAY (MOR) (SEE NOTE 1)
KEYPAD
A B C
MOR1
M1 SSRVR1 14 15
SSRVR1 30 31 32
M1 SSRVR1 33 20 21
TDLP1 16 17
M1 18 19
22 23
34 35
26 29
0.5A
3A
CPT - 120-24VAC 1PH, 50VA
LSH-1 SEAL LEAK DETECTOR
TSH-1 MOTOR TEMP SWITCH
TERMINAL JUNCTION BOX
20 21 22 23
120 121 122 123
LAH-1 SL1
TAH-1 MTH1
RESET
PUMP PROTECTION MODULE

24 VDC POWER
24+ 24-
124 125
TBP1 SEE NOTE 2
6 3P1
3N1
102 103
HS-1 H-O-A
H O A
101 RMTH1 102 RMSL1
100 RPLMP1
104 RM1
RPLC1 106 RBRM1
RPLC1 107 RPLMP1
127 126
RFS2
109
114 115
RM1
RMSL1
3P1 116
YI-1
RRST1 116A RMTH1
116B RMTH1
117 118 119
RRST1
HS-1A RESET
TO SHEET LCK-I-12
RRST1 RMSL1 119
RMSL1
TO 219 ON SHEET LCK-I-12
RMTH1 RRST1

112 50mA AI0.8 PUMP NO.1 MOTOR CURRENT
100 1A Q0.7 PUMP NO.1 CALL TO RUN
114 50mA I3.1 PUMP NO.1 IN HAND
115 50mA I3.0 PUMP NO.1 IN AUTO
122 50mA I6.0 PUMP NO.1 IN SOFT STARTER MODE
121 50mA I3.2 PUMP NO.1 SEAL FAILURE ALARM
113 50mA I0.7 PUMP NO.1 ON/OFF
117 50mA I3.3 PUMP NO.1 MOTOR OVERLOAD ALARM
118 50mA I0.6 ALARMS RESET
119 1A Q0.4 ALARMS RESET
120 50mA I1.1 PUMP NO.1 HIGH TEMPERATURE ALARM

LEGEND
△ DEVICE OR FIELD TERMINAL LOCATED AT MOTOR
✳ DEVICE OR FIELD TERMINAL LOCATED REMOTE
□ DEVICE OR FIELD TERMINAL LOCATED AT MCC/POWER PANEL
■ FIELD TERMINAL LOCATED AT CONTROL PANEL
▲ REMOTE TERMINAL
● DEVICE TERMINAL NO.
◆ PLC INTERFACE TERMINAL

NOTES:

1. MOTOR OVERLOAD RELAY OUTPUT CONTACT SHOWN NORMALLY CLOSED WHEN RELAY IS DE-ENERGIZED, OPEN WHEN ENERGIZED, AND CLOSED WHEN IN ALARM. VERIFY OPERATION OF RELAY PROVIDED AND ADJUST CONNECTION OF RMOR AUXILIARY RELAYS.
2. FUSED TERMINAL ON TERMINAL BLOCK TB4 SEE CONTROL POWER AND COMMUNICATION WIRING DIAGRAM DRAWING NO. LCK-I-4.
3. ALL FLOAT CONTROL CIRCUIT WIRES COLOR SHALL BE YELLOW.

GENERAL NOTES:

1. NO ELECTRICAL MATERIAL, APPARATUS, DEVICES, APPLIANCES, FIXTURES, OR EQUIPMENT SHALL BE SOLD OR INSTALLED IN THE CITY UNLESS THEY ARE IN CONFORMANCE WITH THE PROVISIONS OF SECTION 508 CITY OF HOUSTON ELECTRICAL CODE, THE LAWS OF THE STATE OF TEXAS AND ANY APPLICABLE RULES AND REGULATIONS ISSUED UNDER THE AUTHORITY OF THE STATE STATUES. THE MAKER'S NAME, TRADEMARK, OR OTHER IDENTIFICATION SYMBOL SHALL BE PLACED ON ALL ELECTRICAL MATERIALS, APPARATUS, DEVICES, APPLIANCES, FIXTURES, AND EQUIPMENT USED OR INSTALLED UNDER THE PROVISIONS OF THIS CODE. ALL ELECTRICAL MATERIALS AND EQUIPMENT SHALL BE LISTED AND LABELED FOR THE INTENDED USE AND SHALL BE INCLUDED IN A LIST PUBLISHED BY AN APPROVAL AGENCY.

NO.	DATE	REVISION	APP.

FOR INTERIM REVIEW
ONLY NOT INTENDED FOR
PERMIT, BIDDING OR
CONSTRUCTION PURPOSES.
ENGINEER:
HOSS FOROUZAN
P.E. SERIAL NO.77748
12/15/2025

GAI
Gupta & Associates, Inc.
CONSULTING ENGINEERING
Registration No. F-2593
302 Dennis St.,
Houston, Texas 77006
Tel: 713-636-2936
Fax: 713-636-2987
email: hforouzan@gaiconsulting.com

IDS Engineering Group
13430 NW. Freeway
Suite 700
Houston, Tx. 77040
713.462.3178
TxEng Firm 2726
TxSurv Firm 10110700

CITY OF HOUSTON
HOUSTON PUBLIC WORKS

LIFT STATION RENEWAL AND REPLACEMENT FY 2023

LOCKWOOD LIFT STATION PUMP NO.1 CONTROL WIRING DIAGRAM

WBS NUMBER	FOR CITY OF HOUSTON USE ONLY
R-000267-0179-4	
DRAWING SCALE	
HORIZ: VERT:	
CITY OF HOUSTON PM	
NAWARAJ PANTA, P.E.	
SHEET NO. 61 OF 321	

DWG. NO. LCK-I-11

IDS JOB No. 0057-085-00

PLOTTED: 12/11/2025 8:20 PM

FILE PATH: O:\H8108_Lift Station Rehabilitation And Reconstruction (IDS)\6 Drawings\Instrumentation And Control\Working\Lockwood\H8108_LCK-I-12.dwg

FIELD | MOTOR CONTROL CENTER | CONTROL PANEL (DOOR | INTERIOR PANEL | PLC)

PUMP NO.2
M
T1 T2 T3 G
A B C
4-20mA CURRENT TRANSDUCER
Aϕ Bϕ Cϕ CT
M1
SSRV2
MCP
MCC CKT 3
1A 1A
CPT - 480-120VAC 1PH, 250VA MIN
X1-2 3A X2-2
TDLP2 TD 2 10
SSCR2
HS-2B SS BYP.
X0 M1 CR1
0X X0
MOR2
TDLP2F TD 2 10
TDLP2F 1 3
SSCR2 R 2 10
SSRVR2 R 2 10
SSRV NO. 2 CONTROLLER BOARD
RUN
START/ STOP
FAULT
CR1
KEYPAD
IE-2 MOTOR OVERLOAD RELAY (MOR) (SEE NOTE 2)
A B C
MOR2
M1 SSRVR2 14 15
SSRVR2 30 31 32
M1 SSRVR2 33 20 21
TDLP2 1 3 16 17
M1 18 19
22 23
34 35
28 29
0.5A 3A
CPT - 120-24VAC 1PH, 50VA
LSH-2 SEAL LEAK DETECTOR
TSH-2 MOTOR TEMP SWITCH
TERMINAL JUNCTION BOX
20 21 22 23
220 221 222 223
LAH-2 SL2
TAH-2 MTH2
RESET
PUMP PROTECTION MODULE
FROM SHEET LCK-I-11
TO SHEET LCK-I-13
HS-2 H-O-A
YI-2 R
24 VDC POWER 24+ 24-
224 225
TBP2 SEE NOTE 2
7 3P2
202 203
201 RMTH2 1 4
202 RMSL2 1 4
200 RPLMP2 R 2 10
204 RM2 R 2 10
RPLC1 6 5
206 RBRM2 1 3
RPLC1 6 7
207 RPLMP2 1 3
227
226 RFS2 6 7
209
214 215
RM2 1 3
RMSL2 6 7
3P2 216
3N2
RRST2 1 4
216A RMTH2 6 7
216B RMTH2 R 2 10
217 218 219
RRST2 R 2 10
FROM 119 ON SHEET LCK-I-11
TO 319 ON SHEET LCK-I-13
RRST2 11 8
RMSL2 11 9
RMSL2 R 2 10
RMTH2 11 9
RRST2 6 7

PLC:
212 50mA AI1.0 PUMP NO.2 MOTOR CURRENT
200 1A Q1.0 PUMP NO.2 CALL TO RUN
214 50mA I3.5 PUMP NO.2 IN HAND
215 50mA I3.4 PUMP NO.2 IN AUTO
222 50mA I6.2 PUMP NO.2 IN SOFT STATER MODE
221 50mA I3.6 PUMP NO.2 SEAL FAILURE ALARM
213 50mA I1.2 PUMP NO.2 ON/OFF
217 50mA I3.7 PUMP NO.2 MOTOR OVERLOAD ALARM
220 50mA I1.3 PUMP NO.2 HIGH TEMPERATURE ALARM

LEGEND
△ DEVICE OR FIELD TERMINAL LOCATED AT MOTOR
✳ DEVICE OR FIELD TERMINAL LOCATED REMOTE
□ DEVICE OR FIELD TERMINAL LOCATED AT MCC/POWER PANEL
■ FIELD TERMINAL LOCATED AT CONTROL PANEL
▲ REMOTE TERMINAL
● DEVICE TERMINAL NO.
◆ PLC INTERFACE TERMINAL

NOTES:

1. MOTOR OVERLOAD RELAY OUTPUT CONTACT SHOWN NORMALLY CLOSED WHEN RELAY IS DE-ENERGIZED, OPEN WHEN ENERGIZED, AND CLOSED WHEN IN ALARM. VERIFY OPERATION OF RELAY PROVIDED AND ADJUST CONNECTION OF RMOR AUXILIARY RELAYS.
2. FUSED TERMINAL ON TERMINAL BLOCK TB4 SEE CONTROL POWER AND COMMUNICATION WIRING DIAGRAM DRAWING NO. LCK-I-4.
3. ALL FLOAT CONTROL CIRCUIT WIRES COLOR SHALL BE YELLOW.

GENERAL NOTES:

1. NO ELECTRICAL MATERIAL, APPARATUS, DEVICES, APPLIANCES, FIXTURES, OR EQUIPMENT SHALL BE SOLD OR INSTALLED IN THE CITY UNLESS THEY ARE IN CONFORMANCE WITH THE PROVISIONS OF SECTION 508 CITY OF HOUSTON ELECTRICAL CODE, THE LAWS OF THE STATE OF TEXAS AND ANY APPLICABLE RULES AND REGULATIONS ISSUED UNDER THE AUTHORITY OF THE STATE STATUES. THE MAKER'S NAME, TRADEMARK, OR OTHER IDENTIFICATION SYMBOL SHALL BE PLACED ON ALL ELECTRICAL MATERIALS, APPARATUS, DEVICES, APPLIANCES, FIXTURES, AND EQUIPMENT USED OR INSTALLED UNDER THE PROVISIONS OF THIS CODE. ALL ELECTRICAL MATERIALS AND EQUIPMENT SHALL BE LISTED AND LABELED FOR THE INTENDED USE AND SHALL BE INCLUDED IN A LIST PUBLISHED BY AN APPROVAL AGENCY.

NO.	DATE	REVISION	APP.

FOR INTERIM REVIEW
ONLY NOT INTENDED FOR
PERMIT, BIDDING OR
CONSTRUCTION PURPOSES.
ENGINEER:
HOSS FOROUZAN
P.E. SERIAL NO.77748
12/15/2025

GAI
Gupta & Associates, Inc.
CONSULTING ENGINEERING
Registration No. F-2593
302 Dennis St.,
Houston, Texas 77006
Tel: 713-636-2936
Fax: 713-636-2987
email: hforouzan@gaiconsulting.com

IDS Engineering Group
13430 NW. Freeway
Suite 700
Houston, Tx. 77040
713.462.3178
TxEng Firm 2726
TxSurv Firm 10110700

CITY OF HOUSTON
HOUSTON PUBLIC WORKS

LIFT STATION RENEWAL AND REPLACEMENT FY 2023

LOCKWOOD LIFT STATION PUMP NO.2 CONTROL WIRING DIAGRAM

WBS NUMBER	FOR CITY OF HOUSTON USE ONLY
R-000267-0179-4	
DRAWING SCALE	
HORIZ: VERT:	
CITY OF HOUSTON PM	
NAWARAJ PANTA, P.E.	

DWG. NO.	SHEET NO.
LCK–I–12	62 OF 321

IDS JOB No. 0057-085-00

PLOTTED: 12/11/2025 8:20 PM

FILE PATH: O:\H8108_Lift Station Rehabilitation And Reconstruction (IDS)\6 Drawings\Instrumentation And Control\Working\Lockwood\H8108_LCK-I-13.dwg

FIELD | MOTOR CONTROL CENTER | CONTROL PANEL — DOOR | INTERIOR PANEL | PLC

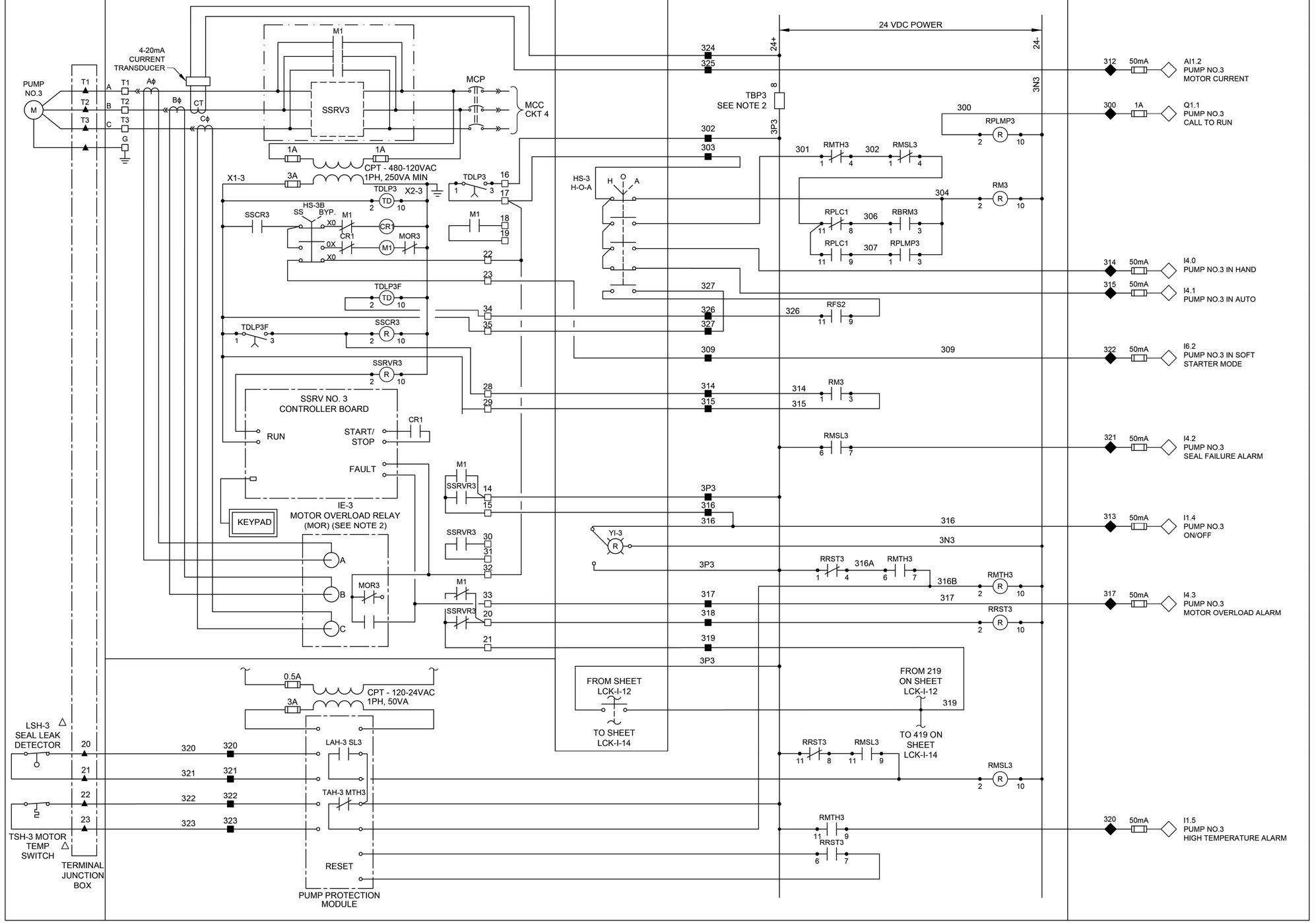

LEGEND

- △ DEVICE OR FIELD TERMINAL LOCATED AT MOTOR
- ✳ DEVICE OR FIELD TERMINAL LOCATED REMOTE
- □ DEVICE OR FIELD TERMINAL LOCATED AT MCC/POWER PANEL
- ■ FIELD TERMINAL LOCATED AT CONTROL PANEL
- ▲ REMOTE TERMINAL
- ● DEVICE TERMINAL NO.
- ◆ PLC INTERFACE TERMINAL

NOTES:

1. MOTOR OVERLOAD RELAY OUTPUT CONTACT SHOWN NORMALLY CLOSED WHEN RELAY IS DE-ENERGIZED, OPEN WHEN ENERGIZED, AND CLOSED WHEN IN ALARM. VERIFY OPERATION OF RELAY PROVIDED AND ADJUST CONNECTION OF RMOR AUXILIARY RELAYS.
2. FUSED TERMINAL ON TERMINAL BLOCK TB4 SEE CONTROL POWER AND COMMUNICATION WIRING DIAGRAM DRAWING NO. LCK-I-4.
3. ALL FLOAT CONTROL CIRCUIT WIRES COLOR SHALL BE YELLOW.

GENERAL NOTES:

1. NO ELECTRICAL MATERIAL, APPARATUS, DEVICES, APPLIANCES, FIXTURES, OR EQUIPMENT SHALL BE SOLD OR INSTALLED IN THE CITY UNLESS THEY ARE IN CONFORMANCE WITH THE PROVISIONS OF SECTION 508 CITY OF HOUSTON ELECTRICAL CODE, THE LAWS OF THE STATE OF TEXAS AND ANY APPLICABLE RULES AND REGULATIONS ISSUED UNDER THE AUTHORITY OF THE STATE STATUES. THE MAKER'S NAME, TRADEMARK, OR OTHER IDENTIFICATION SYMBOL SHALL BE PLACED ON ALL ELECTRICAL MATERIALS, APPARATUS, DEVICES, APPLIANCES, FIXTURES, AND EQUIPMENT USED OR INSTALLED UNDER THE PROVISIONS OF THIS CODE. ALL ELECTRICAL MATERIALS AND EQUIPMENT SHALL BE LISTED AND LABELED FOR THE INTENDED USE AND SHALL BE INCLUDED IN A LIST PUBLISHED BY AN APPROVAL AGENCY.

NO.	DATE	REVISION	APP.

FOR INTERIM REVIEW
ONLY NOT INTENDED FOR
PERMIT, BIDDING OR
CONSTRUCTION PURPOSES.
ENGINEER:
HOSS FOROUZAN
P.E. SERIAL NO.77748
12/15/2025

GAI
Gupta & Associates, Inc.
CONSULTING ENGINEERING
Registration No. F-2593
302 Dennis St.,
Houston, Texas 77006
Tel: 713-636-2936
Fax: 713-636-2987
email: hforouzan@gaiconsulting.com

IDS Engineering Group
13430 NW. Freeway
Suite 700
Houston, Tx. 77040
713.462.3178
TxEng Firm 2726
TxSurv Firm 10110700

CITY OF HOUSTON
HOUSTON PUBLIC WORKS

LIFT STATION RENEWAL AND REPLACEMENT FY 2023

LOCKWOOD LIFT STATION PUMP NO.3 CONTROL WIRING DIAGRAM

WBS NUMBER	FOR CITY OF HOUSTON USE ONLY
R-000267-0179-4	
DRAWING SCALE	
HORIZ: VERT:	
CITY OF HOUSTON PM	
NAWARAJ PANTA, P.E.	
SHEET NO. 63 OF 321	

DWG. NO. LCK-I-13

IDS JOB No. 0057-085-00

PLOTTED: 12/11/2025 8:20 PM

FILE PATH: O:\H8108_Lift Station Rehabilitation And Reconstruction (IDS)\6 Drawings\Instrumentation And Control\Working\Lockwood\H8108_LCK-I-14.dwg

FIELD | MOTOR CONTROL CENTER | CONTROL PANEL: DOOR | INTERIOR PANEL | PLC

PUMP NO.4
M
T1 T2 T3 G
A B C
4-20mA CURRENT TRANSDUCER
Aϕ Bϕ Cϕ CT
M1
SSRV4
MCP
MCC CKT 5
1A 1A
CPT - 480-120VAC 1PH, 250VA MIN
3A
X1-4
X2-4
TDLP4
TD
SSCR4
HS-4B
SS BYP.
X0 M1 CR1
0X X0 CR1 MOR4
M1
TDLP4F
SSCR4
R
SSRVR4
SSRV NO. 4 CONTROLLER BOARD
RUN
START/ STOP
FAULT
CR1
KEYPAD
IE-4 MOTOR OVERLOAD RELAY (MOR) (SEE NOTE 2)
MOR4
SSRVR4
HS-4 H-O-A
H O A
YI-4
0.5A
3A
CPT - 120-24VAC 1PH, 50VA
LSH-4 SEAL LEAK DETECTOR
TSH-4 MOTOR TEMP SWITCH
TERMINAL JUNCTION BOX
LAH-4 SL4
TAH-4 MTH4
RESET
PUMP PROTECTION MODULE
FROM SHEET LCK-I-13
TO SHEET LCK-I-15
FROM 319 ON SHEET LCK-I-13
TO 519 ON SHEET LCK-I-15

24 VDC POWER
24+ 24-
3N4 3P4
TBP4 SEE NOTE 2
RPLMP4
RMTH4 RMSL4
RM4
RPLC2 RBRM4 RPLMP4
RFS3
RRST4 RMSL4 RMTH4

PLC		
412	50mA	AI1.4 PUMP NO.4 MOTOR CURRENT
400	1A	Q2.0 PUMP NO.4 CALL TO RUN
414	50mA	I4.5 PUMP NO.4 IN HAND
415	50mA	I4.4 PUMP NO.4 IN AUTO
422	50mA	I6.3 PUMP NO.4 IN SOFT STARTER MODE
421	50mA	I4.6 PUMP NO.4 SEAL FAILURE ALARM
413	50mA	I2.0 PUMP NO.4 ON/OFF
417	50mA	I4.7 PUMP NO.4 MOTOR OVERLOAD ALARM
420	50mA	I2.1 PUMP NO.4 HIGH TEMPERATURE ALARM

LEGEND

- △ DEVICE OR FIELD TERMINAL LOCATED AT MOTOR
- ✳ DEVICE OR FIELD TERMINAL LOCATED REMOTE
- □ DEVICE OR FIELD TERMINAL LOCATED AT MCC/POWER PANEL
- ■ FIELD TERMINAL LOCATED AT CONTROL PANEL
- ▲ REMOTE TERMINAL
- ● DEVICE TERMINAL NO.
- ◆ PLC INTERFACE TERMINAL

NOTES:

1. MOTOR OVERLOAD RELAY OUTPUT CONTACT SHOWN NORMALLY CLOSED WHEN RELAY IS DE-ENERGIZED, OPEN WHEN ENERGIZED, AND CLOSED WHEN IN ALARM. VERIFY OPERATION OF RELAY PROVIDED AND ADJUST CONNECTION OF RMOR AUXILIARY RELAYS.
2. FUSED TERMINAL ON TERMINAL BLOCK TB4 SEE CONTROL POWER AND COMMUNICATION WIRING DIAGRAM DRAWING NO. LCK-I-4.
3. ALL FLOAT CONTROL CIRCUIT WIRES COLOR SHALL BE YELLOW.

GENERAL NOTES:

1. NO ELECTRICAL MATERIAL, APPARATUS, DEVICES, APPLIANCES, FIXTURES, OR EQUIPMENT SHALL BE SOLD OR INSTALLED IN THE CITY UNLESS THEY ARE IN CONFORMANCE WITH THE PROVISIONS OF SECTION 508 CITY OF HOUSTON ELECTRICAL CODE, THE LAWS OF THE STATE OF TEXAS AND ANY APPLICABLE RULES AND REGULATIONS ISSUED UNDER THE AUTHORITY OF THE STATE STATUES. THE MAKER'S NAME, TRADEMARK, OR OTHER IDENTIFICATION SYMBOL SHALL BE PLACED ON ALL ELECTRICAL MATERIALS, APPARATUS, DEVICES, APPLIANCES, FIXTURES, AND EQUIPMENT USED OR INSTALLED UNDER THE PROVISIONS OF THIS CODE. ALL ELECTRICAL MATERIALS AND EQUIPMENT SHALL BE LISTED AND LABELED FOR THE INTENDED USE AND SHALL BE INCLUDED IN A LIST PUBLISHED BY AN APPROVAL AGENCY.

NO.	DATE	REVISION	APP.

FOR INTERIM REVIEW
ONLY NOT INTENDED FOR
PERMIT, BIDDING OR
CONSTRUCTION PURPOSES.
ENGINEER:
HOSS FOROUZAN
P.E. SERIAL NO.77748
12/15/2025

GAI
Gupta & Associates, Inc.
CONSULTING ENGINEERING
Registration No. F-2593
302 Dennis St.,
Houston, Texas 77006
Tel: 713-636-2936
Fax: 713-636-2987
email: hforouzan@gaiconsulting.com

IDS Engineering Group
13430 NW. Freeway
Suite 700
Houston, Tx. 77040
713.462.3178
TxEng Firm 2726
TxSurv Firm 10110700

CITY OF HOUSTON
HOUSTON PUBLIC WORKS

LIFT STATION RENEWAL AND REPLACEMENT FY 2023

LOCKWOOD LIFT STATION PUMP NO.4 CONTROL WIRING DIAGRAM

WBS NUMBER	FOR CITY OF HOUSTON USE ONLY
R-000267-0179-4	
DRAWING SCALE	
HORIZ: VERT:	
CITY OF HOUSTON PM	
NAWARAJ PANTA, P.E.	
SHEET NO. 64 OF 321	

DWG. NO. LCK-I-14

IDS JOB No. 0057-085-00

PLOTTED: 12/11/2025 8:20 PM

FILE PATH: O:\H8108_Lift Station Rehabilitation And Reconstruction (IDS)\6 Drawings\Instrumentation And Control\Working\Lockwood\H8108_LCK-I-15.dwg

FIELD | MOTOR CONTROL CENTER | CONTROL PANEL (DOOR | INTERIOR PANEL | PLC)

PUMP NO.5
M
T1 T2 T3 G
A B C
4-20mA CURRENT TRANSDUCER
Aϕ Bϕ Cϕ CT
M1
SSRV2
MCP
MCC CKT 6
1A 1A
CPT - 480-120VAC 1PH, 250VA MIN
X1-5 X2-5
3A
TDLP5
SSCR5
HS-5B SS BYP.
X0 0X
CR1
MOR5
TDLP5F
SSRVR5
SSRV NO. 5 CONTROLLER BOARD
RUN
START/ STOP
FAULT
KEYPAD
IE-5 MOTOR OVERLOAD RELAY (MOR) (SEE NOTE 2)
A B C
0.5A
3A
CPT - 120-24VAC 1PH, 50VA
LSH-5 SEAL LEAK DETECTOR
TSH-5 MOTOR TEMP SWITCH
TERMINAL JUNCTION BOX
LAH-5 SL5
TAH-5 MTH5
RESET
PUMP PROTECTION MODULE
HS-5 H-O-A
H O A
YI-5
FROM SHEET LCK-I-14
TO SHEET LCK-I-16
FROM 419 ON SHEET LCK-I-14
TO 619 ON SHEET LCK-I-16
24 VDC POWER
24+ 24-
TBP5 SEE NOTE 2
3P5 3N5
RPLMP5
RMTH5 RMSL5
RM5
RPLC2 RBRM5 RPLMP5
RFS3
RRST5
516A 516B
AI1.6 PUMP NO.5 MOTOR CURRENT
Q2.1 PUMP NO.5 CALL TO RUN
I5.1 PUMP NO.5 IN HAND
I5.0 PUMP NO.5 IN AUTO
I6.4 PUMP NO.5 IN SOFT STARTER MODE
I5.2 PUMP NO.5 SEAL FAILURE ALARM
I2.2 PUMP NO.5 ON/OFF
I5.3 PUMP NO.5 MOTOR OVERLOAD ALARM
I2.3 PUMP NO.5 HIGH TEMPERATURE ALARM

LEGEND

- △ DEVICE OR FIELD TERMINAL LOCATED AT MOTOR
- ✳ DEVICE OR FIELD TERMINAL LOCATED REMOTE
- □ DEVICE OR FIELD TERMINAL LOCATED AT MCC/POWER PANEL
- ■ FIELD TERMINAL LOCATED AT CONTROL PANEL
- ▲ REMOTE TERMINAL
- ● DEVICE TERMINAL NO.
- ◆ PLC INTERFACE TERMINAL

NOTES:

1. MOTOR OVERLOAD RELAY OUTPUT CONTACT SHOWN NORMALLY CLOSED WHEN RELAY IS DE-ENERGIZED, OPEN WHEN ENERGIZED, AND CLOSED WHEN IN ALARM. VERIFY OPERATION OF RELAY PROVIDED AND ADJUST CONNECTION OF RMOR AUXILIARY RELAYS.
2. FUSED TERMINAL ON TERMINAL BLOCK TB4 SEE CONTROL POWER AND COMMUNICATION WIRING DIAGRAM DRAWING NO. LCK-I-4.
3. ALL FLOAT CONTROL CIRCUIT WIRES COLOR SHALL BE YELLOW.

GENERAL NOTES:

1. NO ELECTRICAL MATERIAL, APPARATUS, DEVICES, APPLIANCES, FIXTURES, OR EQUIPMENT SHALL BE SOLD OR INSTALLED IN THE CITY UNLESS THEY ARE IN CONFORMANCE WITH THE PROVISIONS OF SECTION 508 CITY OF HOUSTON ELECTRICAL CODE, THE LAWS OF THE STATE OF TEXAS AND ANY APPLICABLE RULES AND REGULATIONS ISSUED UNDER THE AUTHORITY OF THE STATE STATUES. THE MAKER'S NAME, TRADEMARK, OR OTHER IDENTIFICATION SYMBOL SHALL BE PLACED ON ALL ELECTRICAL MATERIALS, APPARATUS, DEVICES, APPLIANCES, FIXTURES, AND EQUIPMENT USED OR INSTALLED UNDER THE PROVISIONS OF THIS CODE. ALL ELECTRICAL MATERIALS AND EQUIPMENT SHALL BE LISTED AND LABELED FOR THE INTENDED USE AND SHALL BE INCLUDED IN A LIST PUBLISHED BY AN APPROVAL AGENCY.

NO.	DATE	REVISION	APP.

FOR INTERIM REVIEW
ONLY NOT INTENDED FOR
PERMIT, BIDDING OR
CONSTRUCTION PURPOSES.
ENGINEER:
HOSS FOROUZAN
P.E. SERIAL NO.77748
12/15/2025

GAI
Gupta & Associates, Inc.
CONSULTING ENGINEERING
Registration No. F-2593
302 Dennis St., Houston, Texas 77006
Tel: 713-636-2936
Fax: 713-636-2987
email: hforouzan@gaiconsulting.com

IDS Engineering Group
13430 NW. Freeway Suite 700
Houston, Tx. 77040
713.462.3178
TxEng Firm 2726
TxSurv Firm 10110700

CITY OF HOUSTON
HOUSTON PUBLIC WORKS

LIFT STATION RENEWAL AND REPLACEMENT FY 2023

LOCKWOOD LIFT STATION PUMP NO.5 CONTROL WIRING DIAGRAM

WBS NUMBER	FOR CITY OF HOUSTON USE ONLY
R-000267-0179-4	
DRAWING SCALE	
HORIZ: VERT:	
CITY OF HOUSTON PM	
NAWARAJ PANTA, P.E.	
SHEET NO. 65 OF 321	

DWG. NO. LCK–I–15

IDS JOB No. 0057-085-00

PLOTTED: 12/11/2025 8:20 PM

FILE PATH: O:\H8108_Lift Station Rehabilitation And Reconstruction (IDS)\6 Drawings\Instrumentation And Control\Working\Lockwood\H8108_LCK-I-16.dwg

FIELD | MOTOR CONTROL CENTER | CONTROL PANEL (DOOR | INTERIOR PANEL | PLC)

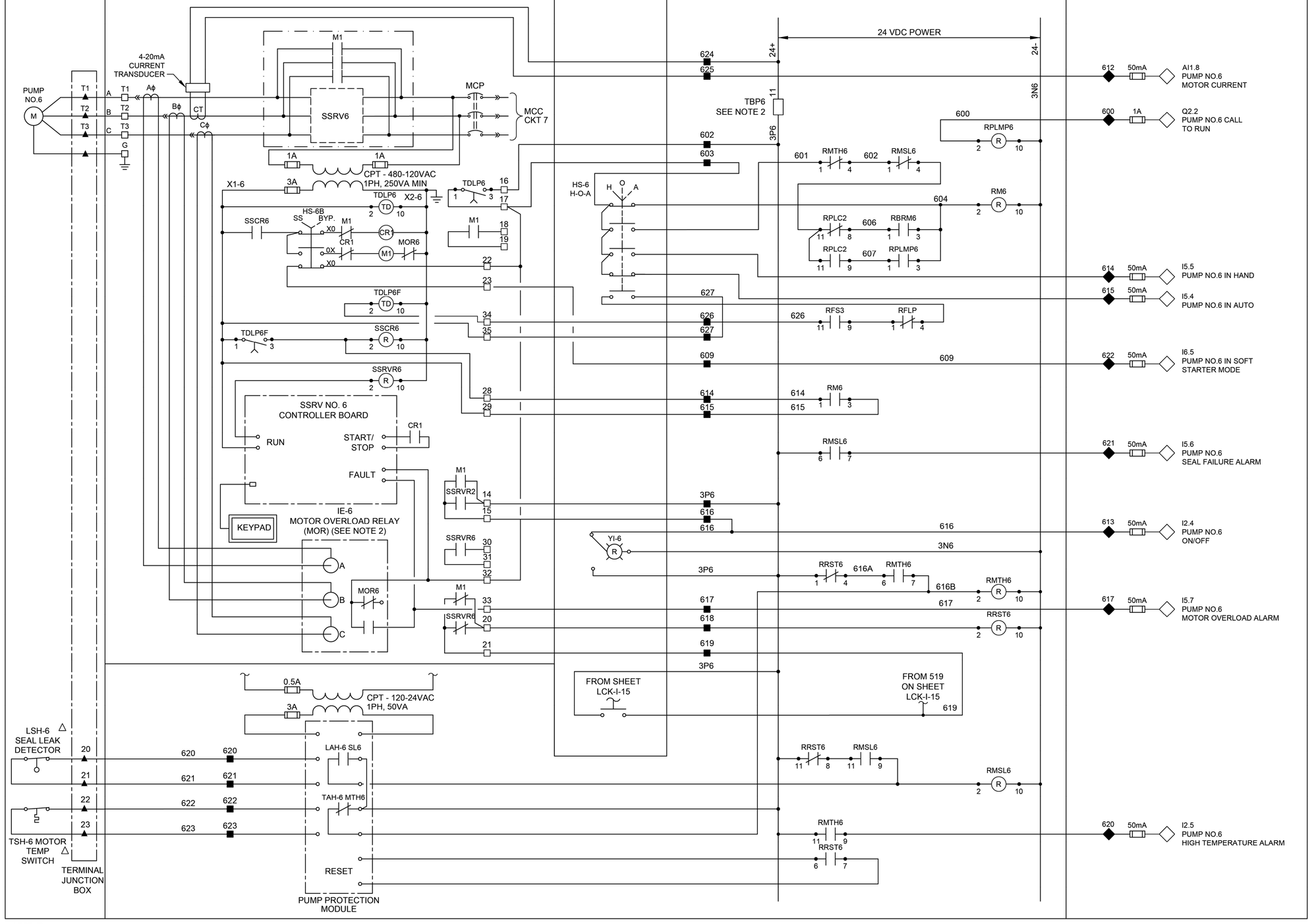

LEGEND

- △ DEVICE OR FIELD TERMINAL LOCATED AT MOTOR
- ✳ DEVICE OR FIELD TERMINAL LOCATED REMOTE
- □ DEVICE OR FIELD TERMINAL LOCATED AT MCC/POWER PANEL
- ■ FIELD TERMINAL LOCATED AT CONTROL PANEL
- ▲ REMOTE TERMINAL
- ● DEVICE TERMINAL NO.
- ◆ PLC INTERFACE TERMINAL

NOTES:

1. MOTOR OVERLOAD RELAY OUTPUT CONTACT SHOWN NORMALLY CLOSED WHEN RELAY IS DE-ENERGIZED, OPEN WHEN ENERGIZED, AND CLOSED WHEN IN ALARM. VERIFY OPERATION OF RELAY PROVIDED AND ADJUST CONNECTION OF RMOR AUXILIARY RELAYS.
2. FUSED TERMINAL ON TERMINAL BLOCK TB4 SEE CONTROL POWER AND COMMUNICATION WIRING DIAGRAM DRAWING NO. LCK-I-4.
3. ALL FLOAT CONTROL CIRCUIT WIRES COLOR SHALL BE YELLOW.

GENERAL NOTES:

1. NO ELECTRICAL MATERIAL, APPARATUS, DEVICES, APPLIANCES, FIXTURES, OR EQUIPMENT SHALL BE SOLD OR INSTALLED IN THE CITY UNLESS THEY ARE IN CONFORMANCE WITH THE PROVISIONS OF SECTION 508 CITY OF HOUSTON ELECTRICAL CODE, THE LAWS OF THE STATE OF TEXAS AND ANY APPLICABLE RULES AND REGULATIONS ISSUED UNDER THE AUTHORITY OF THE STATE STATUES. THE MAKER'S NAME, TRADEMARK, OR OTHER IDENTIFICATION SYMBOL SHALL BE PLACED ON ALL ELECTRICAL MATERIALS, APPARATUS, DEVICES, APPLIANCES, FIXTURES, AND EQUIPMENT USED OR INSTALLED UNDER THE PROVISIONS OF THIS CODE. ALL ELECTRICAL MATERIALS AND EQUIPMENT SHALL BE LISTED AND LABELED FOR THE INTENDED USE AND SHALL BE INCLUDED IN A LIST PUBLISHED BY AN APPROVAL AGENCY.

NO.	DATE	REVISION	APP.

FOR INTERIM REVIEW
ONLY NOT INTENDED FOR
PERMIT, BIDDING OR
CONSTRUCTION PURPOSES.
ENGINEER:
HOSS FOROUZAN
P.E. SERIAL NO.77748
12/15/2025

GAI
Gupta & Associates, Inc.
CONSULTING ENGINEERING
Registration No. F-2593
302 Dennis St.,
Houston, Texas 77006
Tel: 713-636-2936
Fax: 713-636-2987
email: hforouzan@gaiconsulting.com

IDS Engineering Group
13430 NW. Freeway
Suite 700
Houston, Tx. 77040
713.462.3178
TxEng Firm 2726
TxSurv Firm 10110700

CITY OF HOUSTON
HOUSTON PUBLIC WORKS

LIFT STATION RENEWAL AND REPLACEMENT FY 2023

LOCKWOOD LIFT STATION PUMP NO.6 CONTROL WIRING DIAGRAM

WBS NUMBER	FOR CITY OF HOUSTON USE ONLY
R-000267-0179-4	
DRAWING SCALE	
HORIZ: VERT:	
CITY OF HOUSTON PM	
NAWARAJ PANTA, P.E.	

DWG. NO.	SHEET NO.
LCK–I–16	66 OF 321

IDS JOB No. 0057-085-00

PLOTTED: 12/17/2025 3:17 PM

FILE PATH: \\dseg.com\FS\Projects\0000\005708500 CoH Lift Stations - FY 2023\CAD\DWG\PRODUCTION\67-SOUTH PNT SITE PLAN AND DEMOD.dwg

LEGEND

- EXISTING CONCRETE PAVEMENT
- REMOVE EXISTING CONCRETE PAVEMENT
- SITE DEMOLITION
- EXISTING CONCRETE SIDEWALK
- REMOVE EXISTING CONCRETE SIDEWALK
- ABANDON ANY UNDERGROUND UTILITY
- REMOVE ANY UNDERGROUND UTILITY
- REMOVE EXISTING FENCE
- FILTER FABRIC FENCE
- I.P.B.-I — INLET PROTECTION BARRIER

NOTES:

1. EXISTING LIFT STATION WET WELL TO REMAIN.
2. SEE ELECTRICAL PLANS ON SHEETS SPT-E-01-SPT-I-14 FOR ELECTRICAL DEMOLITION.
3. CONTRACTOR SHALL COORDINATE WITH CENTERPOINT ENERGY TO DE-ENERGIZE THE LIFT STATION AND OTHER ELECTRICAL EQUIPMENT ON SITE.
4. CONTRACTOR SHALL PROTECT THE EXISTING CONDUIT AND CABLE. IF CABLE OR CONDUIT IS DAMAGED CONTRACTOR SHALL REPLACE AT NO ADDITIONAL COST TO THE CITY.
5. REMOVE THE EXISTING FORCE MAIN TO THE NEAREST PIPE JOINT AND TIE PROP FORCE MAIN TO EXIST. USE RESTRAINED JOINTS.
6. THE EXISTING FORCE MAIN IS ASSUMED TO BE DUCTILE IRON BELL AND SPIGOT AND SHALL BE FIELD VERIFIED BY THE CONTRACTOR.

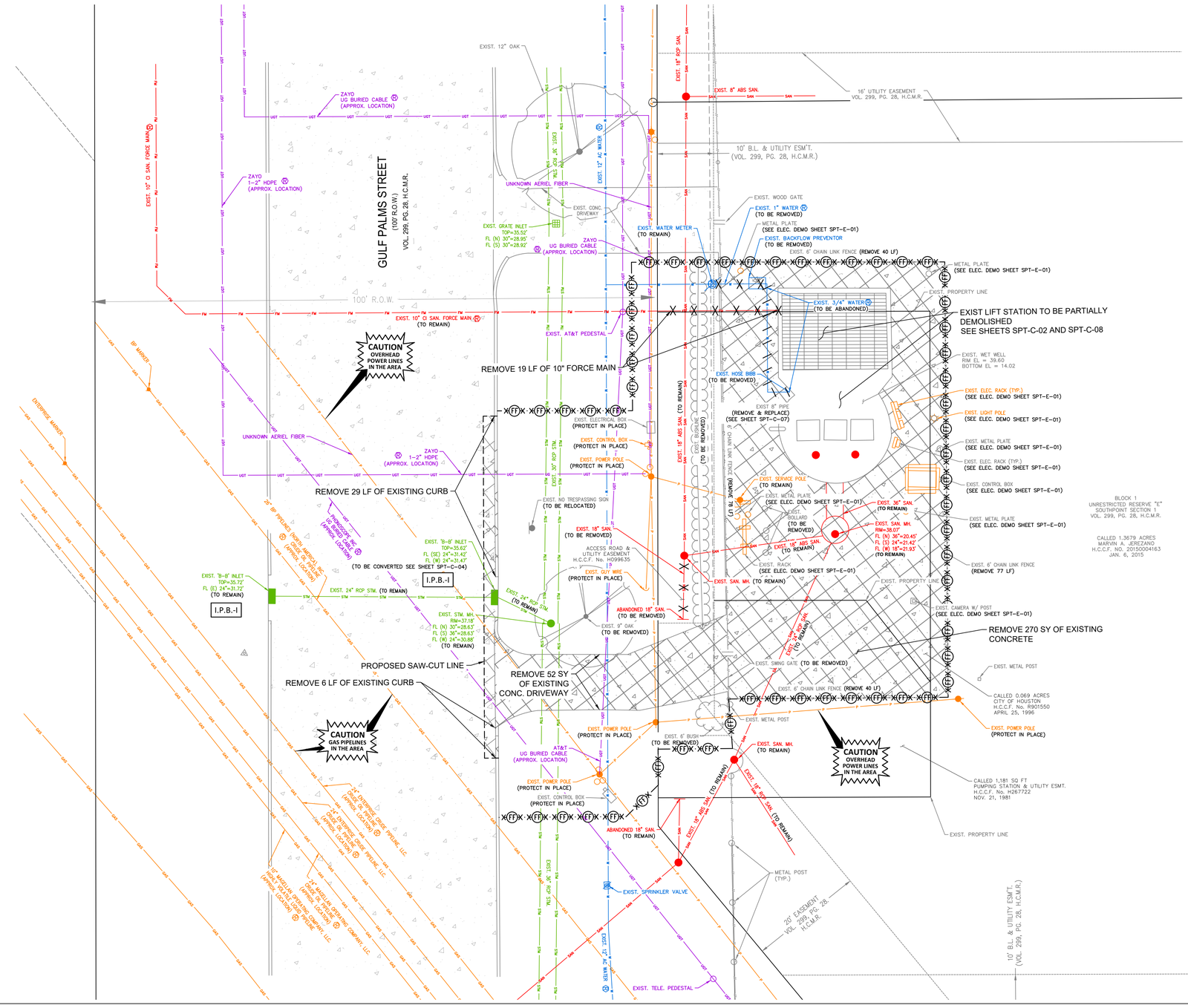
GULF PALMS STREET
(100' R.O.W.)
VOL. 299, PG. 28, H.C.M.R.
100' R.O.W.
EXIST. 10" CI SAN. FORCE MAIN (TO REMAIN)
EXIST. 12" OAK
ZAYO UG BURIED CABLE (APPROX. LOCATION)
ZAYO 1-2" HDPE (APPROX. LOCATION)
UNKNOWN AERIEL FIBER
EXIST. CONC. DRIVEWAY
EXIST. GRATE INLET TOP=35.52' FL (N) 30"=28.95' FL (S) 30"=28.92'
EXIST. 12" AC WATER
EXIST. 30" RCP STM.
EXIST. 18" RCP SAN.
EXIST. 8" ABS SAN.
16' UTILITY EASEMENT VOL. 299, PG. 28, H.C.M.R.
10' B.L. & UTILITY ESM'T. (VOL. 299, PG. 28, H.C.M.R.)
EXIST. WOOD GATE
EXIST. 1" WATER (TO BE REMOVED)
METAL PLATE (SEE ELEC. DEMO SHEET SPT-E-01)
EXIST. BACKFLOW PREVENTOR (TO BE REMOVED)
EXIST. WATER METER (TO REMAIN)
EXIST. 6' CHAIN LINK FENCE (REMOVE 40 LF)
EXIST. 3/4" WATER (TO BE ABANDONED)
EXIST. PROPERTY LINE
EXIST LIFT STATION TO BE PARTIALLY DEMOLISHED
SEE SHEETS SPT-C-02 AND SPT-C-08
EXIST. WET WELL RIM EL = 39.60 BOTTOM EL = 14.02
EXIST. HOSE BIBB (TO BE REMOVED)
EXIST. AT&T PEDESTAL
REMOVE 19 LF OF 10" FORCE MAIN
CAUTION OVERHEAD POWER LINES IN THE AREA
EXIST. ELECTRICAL BOX (PROTECT IN PLACE)
EXIST. CONTROL BOX (PROTECT IN PLACE)
EXIST. POWER POLE (PROTECT IN PLACE)
EXIST. 8" PIPE (REMOVE & REPLACE) (SEE SHEET SPT-C-07)
EXIST. 18" ABS SAN. (TO REMAIN)
EXIST. BUILDING (TO BE REMOVED)
EXIST. SERVICE POLE (TO REMAIN)
EXIST. METAL PLATE (SEE ELEC. DEMO SHEET SPT-E-01)
EXIST. BOLLARD (TO BE REMOVED)
EXIST. 36" SAN. (TO REMAIN)
EXIST. SAN. MH. RIM=38.07' FL (N) 36"=20.45' FL (S) 24"=21.42' FL (W) 18"=21.93' (TO REMAIN)
EXIST. 18" ABS SAN. (TO REMAIN)
EXIST. RACK (SEE ELEC. DEMO SHEET SPT-E-01)
EXIST. GUY WIRE (PROTECT IN PLACE)
EXIST. SAN. MH. (TO REMAIN)
EXIST. 6' CHAIN LINK FENCE (REMOVE 77 LF)
EXIST. CAMERA W/ POST (SEE ELEC. DEMO SHEET SPT-E-01)
REMOVE 270 SY OF EXISTING CONCRETE
EXIST. METAL POST
CALLED 0.069 ACRES CITY OF HOUSTON H.C.C.F. No. R901550 APRIL 25, 1996
EXIST. POWER POLE (PROTECT IN PLACE)
EXIST. SWING GATE (TO BE REMOVED)
EXIST. 6' CHAIN LINK FENCE (REMOVE 40 LF)
EXIST. 6" BUSH (TO BE REMOVED)
EXIST. SAN. MH. (TO REMAIN)
CALLED 1,181 SQ FT PUMPING STATION & UTILITY ESMT. H.C.C.F. No. H267722 NOV. 21, 1981
EXIST. PROPERTY LINE
BLOCK 1 UNRESTRICTED RESERVE "E" SOUTHPOINT SECTION 1 VOL. 299, PG. 28, H.C.M.R.
CALLED 1.3679 ACRES MARVIN A. JEREZANO H.C.C.F. NO. 20150004163 JAN. 6, 2015
EXIST. 18" SAN. (TO BE REMOVED)
ACCESS ROAD & UTILITY EASEMENT H.C.C.F. No. H099635
EXIST. NO TRESPASSING SIGN (TO BE RELOCATED)
REMOVE 29 LF OF EXISTING CURB
EXIST. "B-8" INLET TOP=35.62' FL (SE) 24"=31.42' FL (W) 24"=31.47' (TO BE CONVERTED SEE SHEET SPT-C-04)
EXIST. "B-8" INLET TOP=35.72' FL (E) 24"=31.72' (TO REMAIN)
I.P.B.-I
EXIST. 24" RCP STM. (TO REMAIN)
EXIST. 24" RCP STM. (TO REMAIN)
EXIST. STM. MH. RIM=37.18' FL (N) 30"=28.63' FL (S) 36"=28.63' FL (W) 24"=30.88' (TO REMAIN)
ABANDONED 18" SAN. (TO BE REMOVED)
EXIST. 8" DIA. (TO BE REMOVED)
PROPOSED SAW-CUT LINE
REMOVE 6 LF OF EXISTING CURB
REMOVE 52 SY OF EXISTING CONC. DRIVEWAY
CAUTION GAS PIPELINES IN THE AREA
CAUTION OVERHEAD POWER LINES IN THE AREA
AT&T UG BURIED CABLE (APPROX. LOCATION)
EXIST. POWER POLE (PROTECT IN PLACE)
EXIST. CONTROL BOX (PROTECT IN PLACE)
ABANDONED 18" SAN. (TO REMAIN)
EXIST. 18" ABS SAN. (TO REMAIN)
EXIST. 18" RCP SAN. (TO REMAIN)
EXIST. SPRINKLER VALVE
EXIST. TELE. PEDESTAL
METAL POST (TYP.)
20' EASEMENT VOL. 299, PG. 28, H.C.M.R.
10' B.L. & UTILITY ESM'T. (VOL. 299, PG. 28, H.C.M.R.)
EXIST. 24" GAS
EXIST. 12" GAS
EXIST. 10" GAS
EXIST. 6" GAS
EXIST. 4" GAS
EXIST. 2" GAS
EXIST. 1" GAS
EXIST. 8" GAS
EXIST. 3" GAS
EXIST. 16" GAS
EXIST. 20" GAS
EXIST. 30" GAS
EXIST. 36" GAS
EXIST. 42" GAS
EXIST. 48" GAS
EXIST. 54" GAS
EXIST. 60" GAS
EXIST. 66" GAS
EXIST. 72" GAS
EXIST. 78" GAS
EXIST. 84" GAS
EXIST. 90" GAS
EXIST. 96" GAS
EXIST. 102" GAS
EXIST.

PLOTTED: 12/17/2025 8:02 AM

LIFT STATION DEMOLITION AND ABANDONMENT NOTES:

1. THIS DRAWING IS A REPRODUCTION OF THE EXISTING LIFT STATION CONSTRUCTION DRAWINGS AND INTENDED TO PROVIDE GENERAL INFORMATION FOR STATION DEMOLITION. THE CONTRACTOR IS RESPONSIBLE FOR DETERMINING THE ACTUAL WORK REQUIRED FOR DEMOLITION AND REMOVAL OF STRUCTURAL, MECHANICAL, AND ELECTRICAL COMPONENTS. A CLAIM FOR CHANGED CONDITIONS BETWEEN THE EXISTING CONDITIONS AND THE RECORD DRAWINGS WILL NOT BE CONSIDERED.
2. NO DEMOLITION IS TO BE PERFORMED UNTIL BYPASS PUMPING HAS BEEN INSTALLED AND OPERATIONAL.
3. THE CITY OF HOUSTON WILL RETAIN SALVAGE RIGHTS TO ALL MATERIAL AND EQUIPMENT. ALL MATERIALS AND EQUIPMENT RETAINED BY THE CITY OF HOUSTON SHALL BE DELIVERED TO A POINT DESIGNATED BY CITY OF HOUSTON REPRESENTATIVE (MR. ARTURO CARRILLO 832–395–3558). ANY MATERIAL OR EQUIPMENT NOT RETAINED BY THE CITY OF HOUSTON SHALL BE REMOVED FROM THE SITE AND DISPOSED OF BY THE CONTRACTOR IN ACCORDANCE WITH APPLICABLE REGULATIONS.
4. WHEN REMOVING EXISTING PUMPS, CONTRACTOR SHALL LEAVE AS MUCH WIRE/CABLE AS POSSIBLE IN ORDER FOR THE CITY TO REUSE THE PUMPS.
5. CONTRACTOR SHALL NOTIFY TEXAS DEPARTMENT OF HEALTH (DEPARTMENT) ON A FORM SPECIFIED BY THE DEPARTMENT OF ANY ASBESTOS ABATEMENT ACTIVITY, RENOVATION OR OPERATIONS AND MAINTENANCE ACTIVITY AFFECTING ASBESTOS–CONTAINING BUILDING MATERIALS, OR ANY DEMOLITION IN FACILITIES OR PUBLIC BUILDINGS.
6. CONCRETE SLAB AND WALLS INDICATED ON THIS PLAN SHALL BE REMOVED TO 5 FEET BELOW FINISHED GRADE AS PER SPECIFICATION SECTION 02220.
7. ALL REMAINING WALL OPENINGS IN THE VALVE VAULT SHALL BE SEALED WITH NON–SHRINK GROUT.
8. CONTRACTOR SHALL BACKFILL THE ABANDONED AND DEMOLISHED VALVE VAULT. BACKFILL SHALL BE FLOWABLE FILL AND COMPACTED PROPERLY UP TO THE PROPOSED CONCRETE DISCHARGE ASSEMBLY PAD.
9. THE CONTRACTOR SHALL COORDINATE WITH CENTERPOINT ENERGY TO TEMPORARILY DISCONNECT ELECTRICAL POWER AS NEEDED.
10. THE EXISTING WET WELL SHALL BE CLEANED OF ALL DEBRIS, WASTEWATER AND OTHER RESIDUES BY AN APPROVED CITY OF HOUSTON DISPOSAL CONTRACTOR.
11. THE CONTRACTOR SHALL DISPOSE OF ANY LIQUID OR SOLID WASTE FOUND IN THE WET WELL AT A DISPOSAL FACILITY LICENSED AND APPROVED BY THE STATE OF TEXAS. THE CONTRACTOR SHALL BE RESPONSIBLE FOR THE COST OF TRANSPORTATION, DISPOSAL AND TESTING REQUIRED BY STATE AND FEDERAL REGULATORY AGENCIES, AND BY THE DISPOSAL FACILITY.
12. PRIOR TO THE CLEAN–OUT AND CLEANING OF THE EXISTING LIFT STATION WET WELL, CONTRACTOR TO SUBMIT PROOF TO C.O.H. CONSTRUCTION PM THAT TRANSPORTER/HAULER TO BE USED FOR THE TRANSPORT OF THE CONTENTS OF THE WET WELL (I.E., SOLIDS, GRIT, SEWAGE SLUDGE, AND DOMESTIC SLUDGE, ETC.) IS REGISTERED BY THE TEXAS COMMISSION ON ENVIRONMENTAL QUALITY (TCEQ) AS A SLUDGE TRANSPORTER AND THE TRANSPORTER'S REGISTRATION IS CURRENT AND VALID DURING THE PERIOD OF PERFORMANCE.
13. CONTRACTOR SHALL SUBMIT PROOF OF SUBMISSION OF REQUIRED ASBESTOS/DEMOLITION NOTIFICATION FORM TO THE TEXAS DEPARTMENT OF STATE HEALTH SERVICES TO C.O.H. CONSTRUCTION PM. THE NOTIFICATION TO THE STATE MUST BE PROVIDED A MINIMUM OF 10 DAYS PRIOR TO THE STARTUP OF ANY DEMOLITION ACTIVITIES AT THE SITE.
14. CONTRACTOR SHALL OBTAIN CITY OF HOUSTON DEMOLITION PERMIT (SEE FORM CE 1075 REV. 01/01/2015 FOR GUIDELINES) OR SUBMIT PROOF OF NON–APPLICABILITY TO C.O.H. CONSTRUCTION PROJECT MANAGER PRIOR TO THE STARTUP OF DEMOLITION ACTIVITIES AT THE SITE. THE CONTRACTOR SHALL OBTAIN ANY STATE DEMOLITION PERMITS REQUIRED.

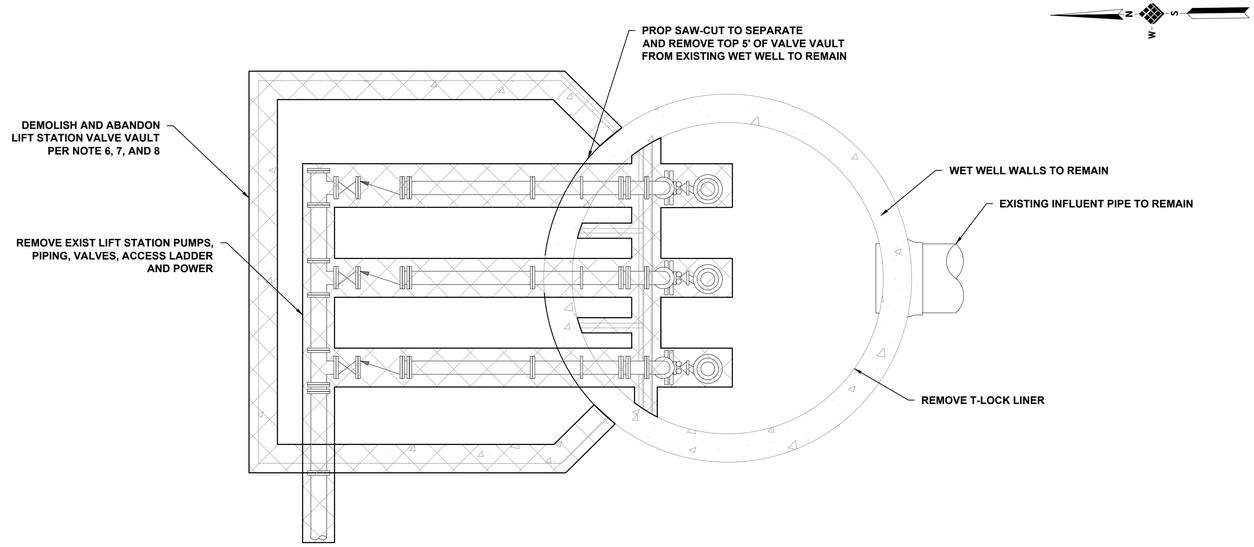

LIFT STATION PLAN

N.T.S.

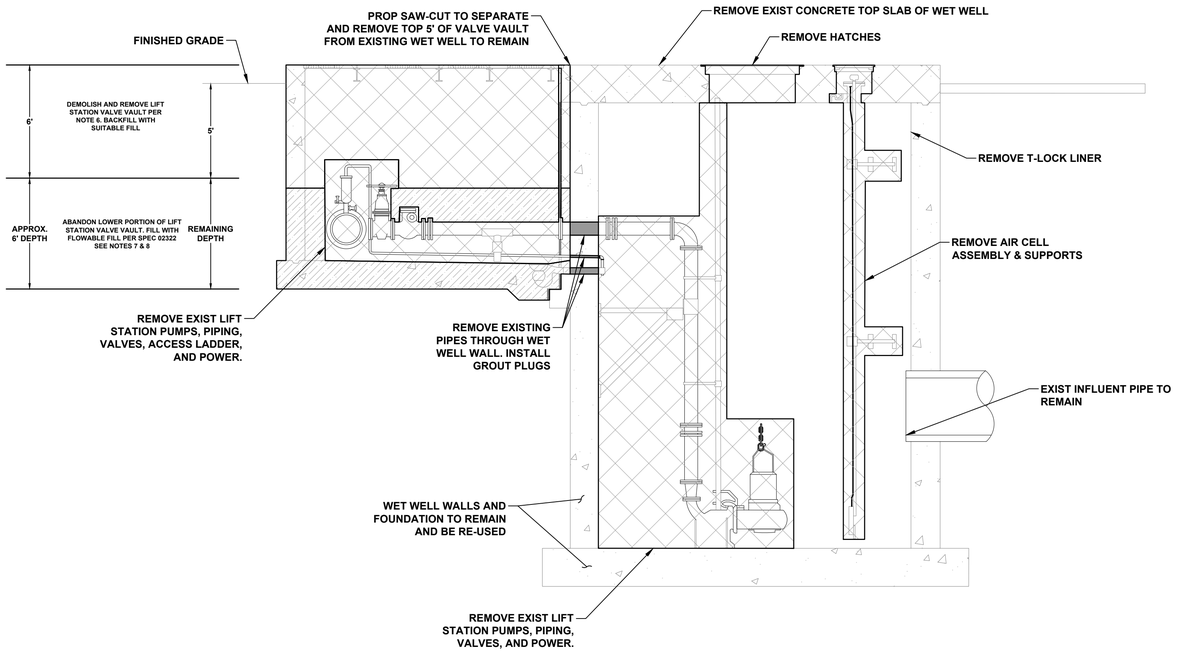

LIFT STATION SECTION

N.T.S.

LEGEND

DEMOLITION AREA

ABANDON VALVE VAULT

NO.	DATE	REVISION	APP.

IDS Engineering Group
13430 NW. Freeway, Suite 700
Houston, Tx. 77040
713.462.3178
TxEng Firm 2726 | TxSurv Firm 10110700

SURVEYED BY: KUO & ASSOCIATES, INC.
TBPE FIRM #F–4578; TBPLS FIRM #1007560

THIS DOCUMENT IS RELEASED FOR THE PURPOSE OF REVIEW UNDER THE AUTHORITY OF MARCEL KHOUW. P.E. 101807 ON 12/17/2025. IT IS NOT TO BE USED FOR CONSTRUCTION PURPOSES.

CITY OF HOUSTON
HOUSTON PUBLIC WORKS

LIFT STATION RENEWAL AND REPLACEMENT FY 2023

SOUTH POINT LIFT STATION SECTION DEMOLITION

WBS NUMBER	FOR CITY OF HOUSTON USE ONLY
R–000267–0179–4	
DRAWING SCALE	
HORIZ: AS NOTED VERT: N/A	
CITY OF HOUSTON PM	
NAWARAJ PANTA, P.E.	
SHEET NO. 68 OF 321	

DWG. NO. SPT–C–02

FILE PATH: \\tdseg.com\FS\Projects\0000\005708500 CoH Lift Stations – FY 2023\CAD\DWG\PRODUCTION\68–SOUTH PNT SECTION DEMO.dwg

PLOTTED: 12/17/2025 3:17 PM

NOTES:

1. EXISTING LIFT STATION WET WELL TO REMAIN.
2. SEE ELECTRICAL PLANS ON SHEETS SPT-E-01-SPT-I-14 FOR ELECTRICAL IMPROVEMENTS.
3. CONTRACTOR SHALL COORDINATE WITH CENTERPOINT ENERGY TO DE-ENERGIZE THE LIFT STATION AND OTHER ELECTRICAL EQUIPMENT ON SITE.
4. REMOVE EXISTING T-LOCK LINER, REPAIR MANHOLE WALL AND RESTORE BENCH PER SPEC 02555, REPLACE MANHOLE FRAME, RING, AND COVER, AND RECOAT WITH A COH APPROVED MATERIAL PER SPEC 09901.
5. DOWEL INTO EXISTING PAVEMENT. USE 24" x #4 SMOOTH DOWELS AT 18" CENTER TO CENTER, CENTERED ON SAWCUT.
6. SANITARY SEWER MANHOLES INSTALLED BELOW THE FLOODPLAIN ELEVATION SHALL HAVE WATERTIGHT MANHOLE FRAMES AND COVERS AS PER SPECIFICATION 02090.
7. CONTRACTOR SHALL FIELD VERIFY THE LOCATION OF THE HOLES DRILLED FOR THE RISER PIPE INSTALLATION THRU THE WET WELL TOP SLAB.
8. REMOVE THE EXISTING FORCE MAIN TO THE NEAREST PIPE JOINT AND TIE PROP FORCE MAIN TO EXIST. USE RESTRAINED JOINTS.
9. THE EXISTING FORCE MAIN IS ASSUMED TO BE DUCTILE IRON BELL AND SPIGOT AND SHALL BE FIELD VERIFIED BY THE CONTRACTOR.
10. CONTRACTOR TO PROTECT EXISTING CONDUIT AND CABLE. IF CABLE OR CONDUIT IS DAMAGED DURING CONSTRUCTION, CONTRACTOR SHALL REPLACE AT NO ADDITIONAL COST TO THE CITY.
11. YARD LIGHT POLES, ELECTRICAL & COMMUNICATION POLES, AND SERVICE POLES SHALL BE ABLE TO WITHSTAND ULTIMATE DESIGN WIND SPEED OF 130 MPH, V(ULT).
12. COAT MANHOLE IN ACCORDANCE WITH SYSTEM 108 PER SPEC SECTION 09901 PART 2.03J.
13. CONTRACTOR TO SAWCUT, REMOVE, AND REPLACE CONCRETE AS NECESSARY. NO SEPARATE PAY.

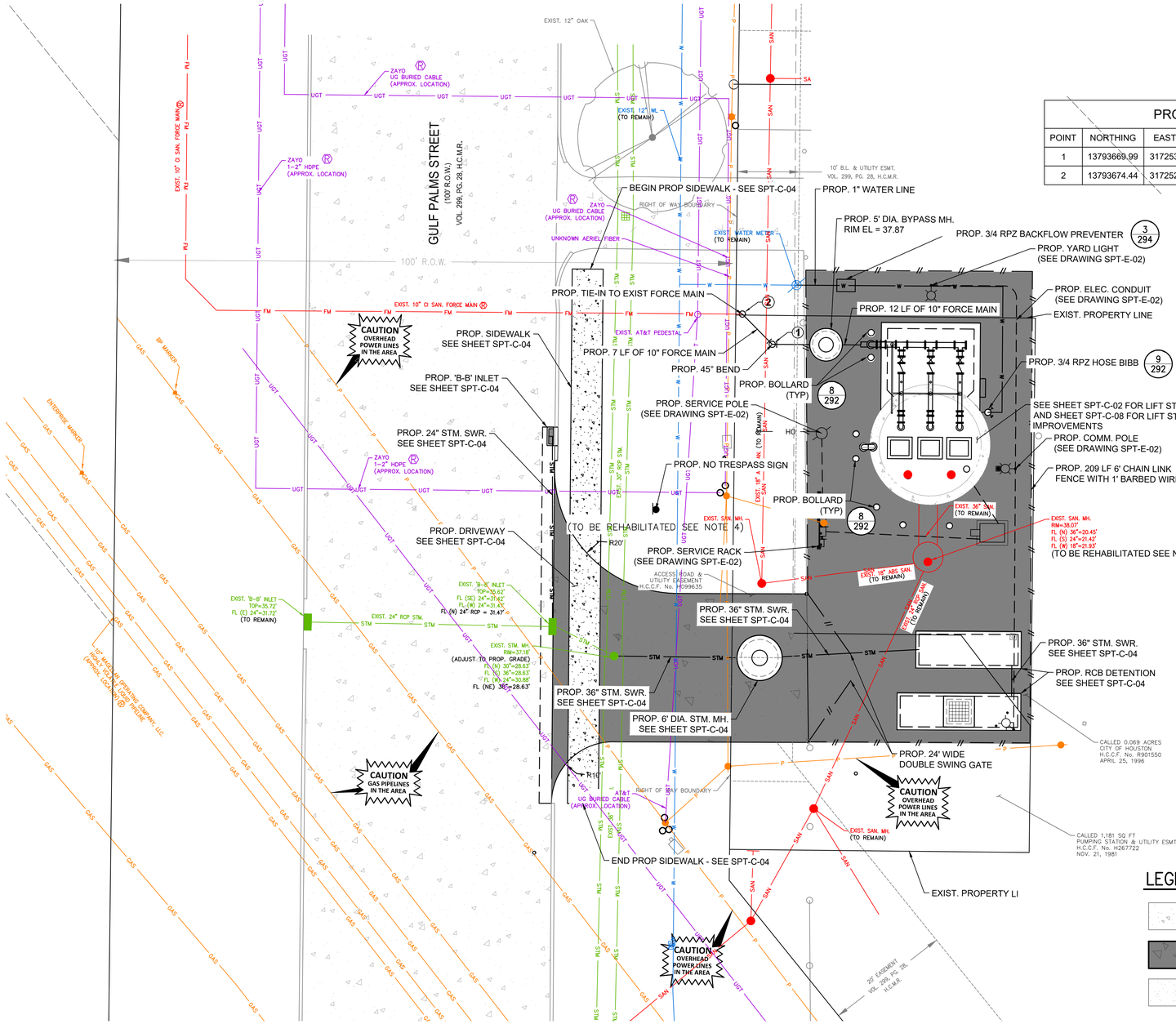
GULF PALMS STREET
(100' R.O.W.)
VOL. 299, PG. 28, H.C.M.R.
100' R.O.W.
EXIST. 10" CI SAN. FORCE MAIN
EXIST. 12" OAK
ZAYO UG BURIED CABLE (APPROX. LOCATION)
ZAYO 1-2" HDPE (APPROX. LOCATION)
EXIST. 10" WL (TO REMAIN)
10' B.L. & UTILITY ESMT. VOL. 299, PG. 28, H.C.M.R.
BEGIN PROP SIDEWALK - SEE SPT-C-04
RIGHT OF WAY BOUNDARY
UNKNOWN AERIEL FIBER
EXIST. WATER METER (TO REMAIN)
PROP. 1" WATER LINE
PROP. 5' DIA. BYPASS MH. RIM EL = 37.87
PROP. 3/4 RPZ BACKFLOW PREVENTER
3 294
PROP. YARD LIGHT (SEE DRAWING SPT-E-02)
PROP. TIE-IN TO EXIST FORCE MAIN
PROP. 12 LF OF 10" FORCE MAIN
PROP. ELEC. CONDUIT (SEE DRAWING SPT-E-02)
EXIST. PROPERTY LINE
EXIST. AT&T PEDESTAL
PROP. 7 LF OF 10" FORCE MAIN
PROP. SIDEWALK SEE SHEET SPT-C-04
PROP. 45° BEND
PROP. BOLLARD (TYP)
8 292
PROP. 3/4 RPZ HOSE BIBB
9 292
PROP. 'B-B' INLET SEE SHEET SPT-C-04
PROP. SERVICE POLE (SEE DRAWING SPT-E-02)
SEE SHEET SPT-C-02 FOR LIFT STATION DEMOLITION AND SHEET SPT-C-08 FOR LIFT STATION IMPROVEMENTS
PROP. COMM. POLE (SEE DRAWING SPT-E-02)
1 294
PROP. 209 LF 6' CHAIN LINK FENCE WITH 1' BARBED WIRE
PROP. 24" STM. SWR. SEE SHEET SPT-C-04
PROP. NO TRESPASS SIGN
PROP. BOLLARD (TYP)
8 292
EXIST. 36" CMP. (TO REMAIN)
EXIST. SAN. MH. RIM=38.07' FL (N) 36"=20.45' FL (S) 24"=21.42' FL (W) 18"=21.93' (TO BE REHABILITATED SEE NOTE 4)
BLOCK 1 UNRESTRICTED RESERVE "E" SOUTHPOINT SECTION 1 VOL. 299, PG. 28, H.C.M.R.
PROP. DRIVEWAY SEE SHEET SPT-C-04
(TO BE REHABILITATED SEE NOTE 4)
R20'
PROP. SERVICE RACK (SEE DRAWING SPT-E-02)
ACCESS ROAD & UTILITY EASEMENT H.C.C.F. No. H239630
EXIST. 18" ABS SAN. (TO REMAIN)
EXIST. 24" CMP (TO REMAIN)
CALLED 1.3679 ACRES MARVIN A. JEREZANO H.C.C.F. NO. 20150004163 JAN. 6, 2015
EXIST. 'B-B' INLET TOP=35.62' FL (SE) 24"=31.62' FL (W) 24"=31.43' FL (N) 24" RCP = 31.47'
EXIST. 'B-B' INLET TOP=35.72' FL (E) 24"=31.72' (TO REMAIN)
EXIST. 24" RCP STM.
EXIST. STM. MH. RIM=37.18' (ADJUST TO PROP. GRADE) FL (N) 30"=28.63' FL (S) 36"=28.63' FL (W) 24"=30.88' FL (NE) 36"=28.63'
PROP. 36" STM. SWR. SEE SHEET SPT-C-04
PROP. 6' DIA. STM. MH. SEE SHEET SPT-C-04
PROP. 36" STM. SWR. SEE SHEET SPT-C-04
PROP. RCB DETENTION SEE SHEET SPT-C-04
PROP. 24' WIDE DOUBLE SWING GATE
CALLED 0.069 ACRES CITY OF HOUSTON H.C.C.F. No. R901550 APRIL 25, 1996
CALLED 1,181 SQ FT PUMPING STATION & UTILITY ESMT. H.C.C.F. No. H267722 NOV. 21, 1981
EXIST. SAN. MH. (TO REMAIN)
EXIST. PROPERTY LI
END PROP SIDEWALK - SEE SPT-C-04
UG BURIED CABLE (APPROX. LOCATION)
AT&T
20' EASEMENT VOL. 299, PG. 28, H.C.M.R.
CAUTION GAS PIPELINES IN THE AREA
CAUTION OVERHEAD POWER LINES IN THE AREA
CAUTION OVERHEAD POWER LINES IN THE AREA
GAS
ENTERPRISE MARKER
8" MAGNUM OPERATING COMPANY, LLC PUBLIC PIPELINE (APPROX. LOCATION)
CAUTION PUBLIC PIPELINE
EXIST. 'B-B' INLET
EXIST. 24" STM. SWR.
EXIST. 30" STM.
EXIST. 18" SAN.
EXIST. 36" SAN.
EXIST. 10" WL
EXIST. 8" SAN.
EXIST. 12" WL
EXIST. 8" WL
EXIST. 6" WL
EXIST. 4" WL
EXIST. 2" WL
EXIST. 16" WL
EXIST. 24" WL
EXIST. 30" WL
EXIST. 36" WL
EXIST. 42" WL
EXIST. 48" WL
EXIST. 54" WL
EXIST. 60" WL
EXIST. 66" WL
EXIST. 72" WL
EXIST. 78" WL
EXIST. 84" WL
EXIST. 90" WL
EXIST. 96" WL
EXIST.

PLOTTED: 12/17/2025 3:17 PM

STORMWATER DETENTION CALCULATIONS

• GROSS AREA	0.0702 AC
• PROP. IMPERVIOUS AREA	0.0633 AC
• STORAGE RATE	0.7500 AC-FT/AC
• STORAGE REQUIRED	0.0475 AC-FT

DETENTION CREDIT

• EXIST. IMPERVIOUS AREA REMOVED	0.0596 AC
• DETENTION CREDIT RATE	0.4000 AC-FT/AC
• DETENTION CREDIT VOLUME	0.0238 AC-FT

TOTAL DETENTION

- REQUIRED = 0.0475 AC-FT - 0.0238 AC-FT = 0.0237 AC-FT
- PROVIDED = 0.0303 AC-FT

NOTES:

1. RESPONSIBILITY FOR MAINTENANCE OF THE DETENTION FACILITY WILL BE BY THE PROPERTY OWNER.
2. SUBSURFACE DRAINAGE SYSTEMS ARE REQUIRED TO BE DRAINED IN 48 HOURS.
3. OFFSITE FLOW IS UNAFFECTED BY THE PROPOSED LIFT STATION STRUCTURE AND CONCRETE PAVING.
4. DRAINAGE AREA EXTENDS BEYOND THE LIMITS OF THIS SHEET.
5. CONCRETE REPAIR IS SHOWN AS A MINIMUM. CONTRACTOR IS RESPONSIBLE FOR ADDITIONAL CONCRETE REPAIR REQUIRED FOR UTILITY INSTALLATION. NO SEPARATE PAY.
6. CONTRACTOR SHALL SUBMIT EXPANSION AND CONTROL JOINT PLAN FOR APPROVAL.
7. EXPANSION JOINTS SHALL BE INSTALLED AT ALL CURB RETURNS AND AT A MAXIMUM SPACING OF 60–FT INTERVALS. PLACE 3/4 " PREFORMED EXPANSION JOINTS THROUGH CURB AND GUTTERS AT LOCATIONS OF EXPANSIONS JOINTS IN PAVEMENT, AT END OF RADIUS RETURNS, AT STREET INTERSECTIONS AND DRIVEWAYS, AND AT CURB INLETS.
8. LONGITUDINAL CONSTRUCTION JOINTS SHALL BE SPACED AT A MAXIMUM OF 15 FT. DEFORMED METAL STRIP TO BE INSTALLED MAXIMUM 1/4 " BELOW FINISH TOP OF PAVEMENT.
9. CONTRACTOR TO SAW–CUT, REMOVE, AND REPLACE CONCRETE AS NECESSARY. NO SEPARATE PAY.

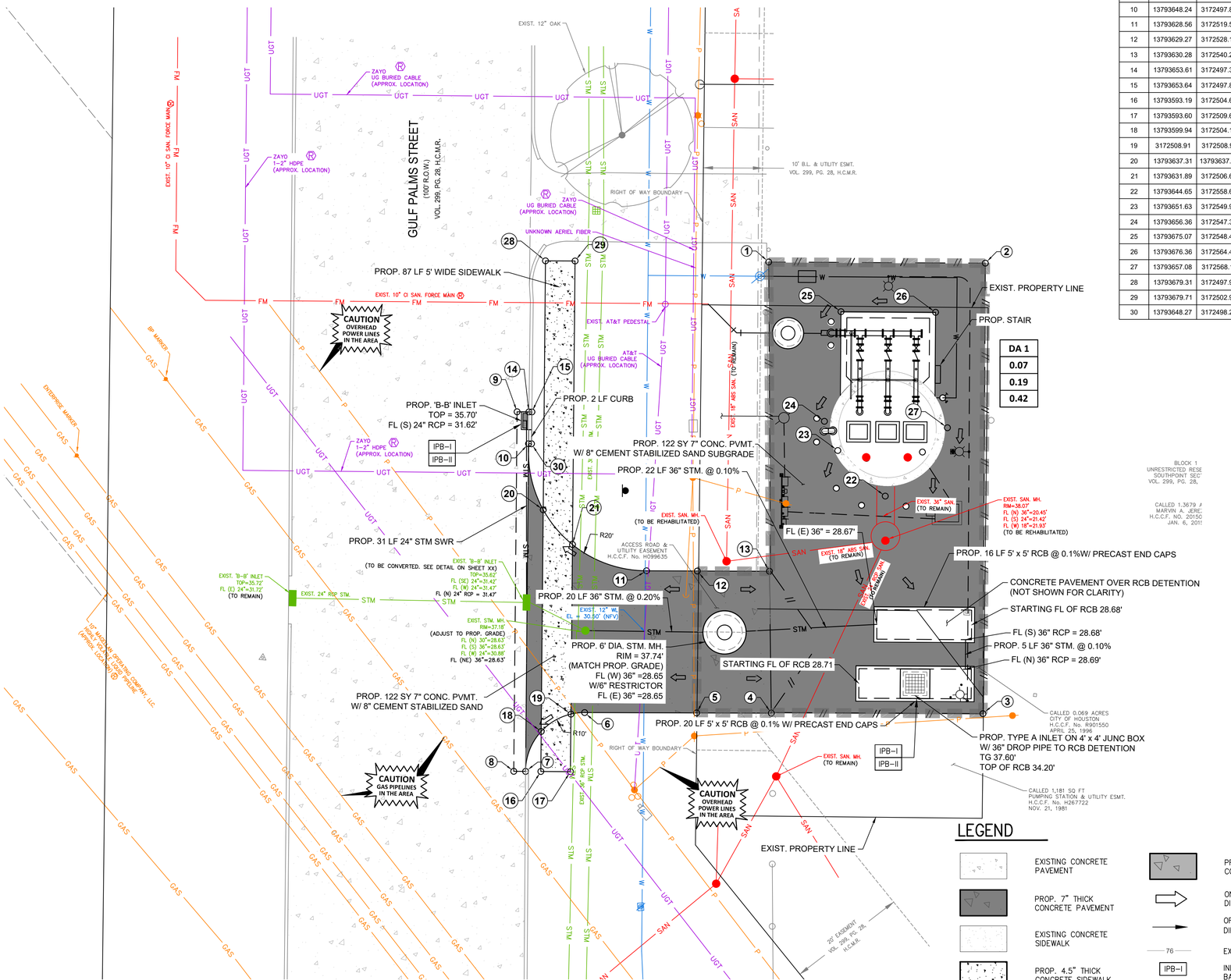

PROPOSED POINT TABLE

POINT	NORTHING	EASTING	DESCRIPTION	ELEVATION
1	13793682.39	3172535.57	PROP. SITE PAVING/MEG	+/- 37.87'
2	13793685.38	3172572.09	PROP. SITE PAVING/MEG	+/- 37.93'
3	13793609.43	3172578.30	PROP. SITE PAVING/MEG	+/- 38.19'
4	13793606.40	3172542.65	PROP. CONCRETE DRIVEWAY/MEG	+/- 37.72'
5	13793605.34	3172530.06	PROP. CONCRETE DRIVEWAY	37.75'
6	13793603.76	3172511.20	PROP. CONCRETE DRIVEWAY	36.24'
7	13793592.98	3172502.12	PROP. CONCRETE DRIVEWAY/MEG	+/- 35.32'
8	13793592.82	3172500.12	PROP. CONCRETE DRIVEWAY/MEG	+/- 35.37'
9	13793648.08	3172495.81	PROP. CONCRETE DRIVEWAY/MEG	+/- 35.27'
10	13793648.24	3172497.80	PROP. CONCRETE DRIVEWAY/MEG	+/- 35.19'
11	13793628.56	3172519.54	PROP. CONCRETE DRIVEWAY	37.25'
12	13793629.27	3172528.10	PROP. CONCRETE DRIVEWAY	37.75'
13	13793630.28	3172540.25	PROP. CONCRETE DRIVEWAY/MEG	+/- 37.71'
14	13793653.61	3172497.39	PROP. CONCRETE DRIVEWAY/MEG	+/- 35.20'
15	13793653.64	3172497.89	PROP. SITE PAVING/MEG	+/- 35.70'
16	13793593.19	3172504.69	PROP. SIDEWALK/MEG	+/- 35.73'
17	13793593.60	3172509.67	PROP. SIDEWALK/MEG	+/- 35.76'
18	13793599.94	3172504.16	PROP. CONCRETE DRIVEWAY	36.05'
19	3172508.91	3172508.91	PROP. CONCRETE DRIVEWAY	36.05'
20	13793637.31	13793637.31	PROP. CONCRETE DRIVEWAY	36.09'
21	13793631.89	3172506.68	PROP. CONCRETE DRIVEWAY	36.24'
22	13793644.65	3172558.64	PROP. SITE PAVING	37.99'
23	13793651.63	3172549.98	PROP. SITE PAVING	39.60'
24	13793656.36	3172547.30	PROP. SITE PAVING	37.78'
25	13793675.07	3172548.48	PROP. SITE PAVING	37.97'
26	13793676.36	3172564.43	PROP. SITE PAVING	38.00'
27	13793657.08	3172568.11	PROP. SITE PAVING	38.00'
28	13793679.31	3172497.96	PROP. SIDEWALK/MEG	+/- 35.67'
29	13793679.71	3172502.94	PROP. SIDEWALK/MEG	+/- 35.69'
30	13793648.27	3172498.29	PROP. SITE PAVING/MEG	+/- 35.69'

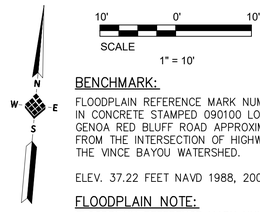

BENCHMARK:

FLOODPLAIN REFERENCE MARK NUMBER 090100 IS A BRASS DISC IN CONCRETE STAMPED 090100 LOCATED ON THE HEADWALL ON GENOA RED BLUFF ROAD APPROXIMATELY 0.8 MILES NORTHEAST FROM THE INTERSECTION OF HIGHWAY 3 IN KEY MAP NO. 577N IN THE VINCE BAYOU WATERSHED.

ELEV. 37.22 FEET NAVD 1988, 2001 ADJUSTMENT

FLOODPLAIN NOTE:

FLOODPLAIN REFERENCE MARK NUMBER 090100 IS A BRASS DISC IN CONCRETE STAMPED 090100 LOCATED ON THE NORTH HEADWALL ON GENOA RED BLUFF RD APPROXIMATELY 0.8 MILE NORTHEAST FROM THE INTERSECTION OF HIGHWAY 3 IN KEY MAP NO. 577N IN THE VINCE BAYOU WATERSHED

ELEV. 37.22 FEET NAVD 1988, 2001 ADJUSTMENT
100–YR ELEV. 32.50'
500–YR ELEV. 33.40'
FIRM PANEL: 48201C1055M

T.B.M #25:

SET "X" CUT IN CONC. LOCATED ON THE WEST SIDE OF GULF PALMS STREET APPROX. 630 FT SOUTH FROM THE INTERSECTION OF FUQUA STREET
ELEV.= 36.67 FT.

EXISTING UTILITY NOTE:

EXISTING UNDERGROUND UTILITY INFORMATION (TYPE, SIZE & OWNERSHIP) ARE SHOWN APPROXIMATELY BASED ON THE AVAILABLE RECORD DRAWINGS AND FIELD VERIFICATION (WHERE FEASIBLE) WITHOUT PROBING AND EXCAVATION. NO WARRANTY IS MADE AS TO THE ACCURACY OR COMPLETENESS OF UTILITY LOCATION SHOWN ON THE DRAWING. CAUTION SHOULD BE EXERCISED WHEN EXCAVATING OR BORE AND JACKING IN THE VICINITY OF UNDERGROUND UTILITIES. OWNERS OF THE UTILITIES SHOULD BE NOTIFIED PRIOR TO SUCH ACTIVITIES. CALL UTILITY COORDINATING COMMITTEE AT 713–223–4567, AT LEAST 48 HOURS PRIOR TO EXCAVATING IN THE STREET RIGHT–OF–WAY.

LEGEND

- EXISTING CONCRETE PAVEMENT
- PROP. 7" THICK CONCRETE PAVEMENT
- EXISTING CONCRETE SIDEWALK
- PROP. 4.5" THICK CONCRETE SIDEWALK
- PROP. 7" THICK REPAIR CONCRETE PAVEMENT
- ON–SITE SHEET FLOW DIRECTION
- OFFSITE SHEET FLOW DIRECTION (SEE NOTE XX)
- 76 EXISTING CONTOUR
- IPB–I INLET PROTECTION BARRIER–STAGE I
- IPB–II INLET PROTECTION BARRIER–STAGE II
- DRAINAGE AREA BOUNDARY
- XX DRAINAGE AREA NO.
- X.XX ACRES
- X.XX 2–YR FLOW (CFS)
- X.XX 100–YR FLOW (CFS)
- # / # DETAIL NO. / DRAWING NO.
- SAW–CUT CONCRETE

NO.	DATE	REVISION	APP.

IDS Engineering Group
13430 NW. Freeway, Suite 700
Houston, Tx. 77040
713.462.3178
TxEng Firm 2726 | TxSurv Firm 10110700
SURVEYED BY: KUO & ASSOCIATES, INC.
TBPE FIRM #F–4578; TBPLS FIRM #1007560

THIS DOCUMENT IS RELEASED FOR THE PURPOSE OF REVIEW UNDER THE AUTHORITY OF MARCEL KHOUW, P.E. 101807 ON 12/17/2025. IT IS NOT TO BE USED FOR CONSTRUCTION PURPOSES.

CITY OF HOUSTON
HOUSTON PUBLIC WORKS

LIFT STATION RENEWAL AND REPLACEMENT FY 2023

SOUTH POINT LIFT STATION GRADING PLAN AND DRAINAGE PLAN

WBS NUMBER	FOR CITY OF HOUSTON USE ONLY
R–000267–0179–4	
DRAWING SCALE	
HORIZ: VALUE VERT: N/A	
CITY OF HOUSTON PM	
DWG. NO.	NAWARAJ PANTA, P.E.
SPT–C–04	SHEET NO. 70 OF 321

FILE PATH: \\idseg.com\FS\Projects\0000\005708500 CoH Lift Stations – FY 2023\CAD\DWG\PRODUCTION\70–SOUTH PNT GRADING.dwg

PLOTTED: 12/17/2025 8:03 AM

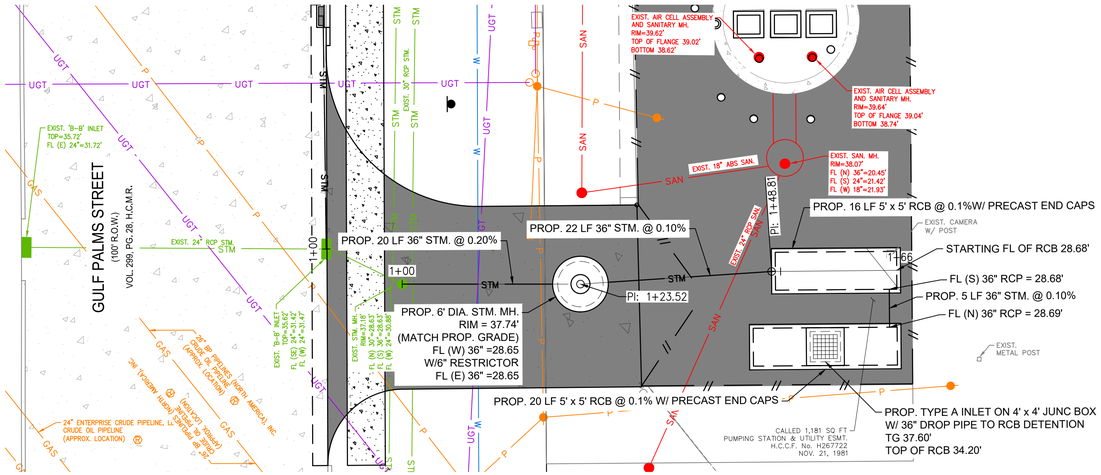

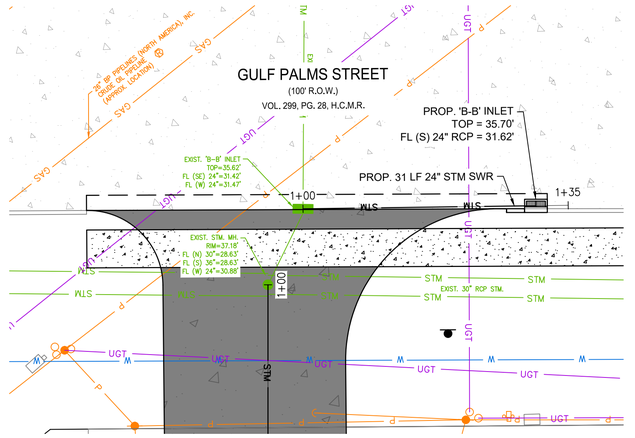

10' 0' 10'
SCALE
H: 1" = 10'
V: 1" = 2'

NO.	DATE	REVISION	APP.

FOR PERMITTING REVIEW ONLY - TO BE SUBMITTED AT 90%

IDS Engineering Group
13430 NW. Freeway, Suite 700
Houston, Tx. 77040
713.462.3178
TxEng Firm 2726 | TxSurv Firm 10110700

SURVEYED BY: KUO & ASSOCIATES, INC.
TBPE FIRM #F-4578; TBPLS FIRM #1007560

THIS DOCUMENT IS RELEASED FOR THE PURPOSE OF REVIEW UNDER THE AUTHORITY OF MARCEL KHOUW, P.E. 101807 ON 12/17/2025. IT IS NOT TO BE USED FOR CONSTRUCTION PURPOSES.

CITY OF HOUSTON
HOUSTON PUBLIC WORKS

LIFT STATION RENEWAL AND REPLACEMENT FY 2023

SOUTH POINT LIFT STATION PLAN AND PROFILE

WBS NUMBER	FOR CITY OF HOUSTON USE ONLY
R-000267-0179-4	
DRAWING SCALE	
HORIZ: 1" = 10' VERT: 1" = 2'	
CITY OF HOUSTON PM	
NAWARAJ PANTA, P.E.	
SHEET NO. 71 OF 321	

DWG. NO. SPT-C-05

FILE PATH: \\idseg.com\FS\Projects\0000\005708500 CoH Lift Stations - FY 2023\CAD\DWG\PRODUCTION\71-SOUTH PNT PLAN AND PROFILE.dwg

PLOTTED: 12/17/2025 8:03 AM

STORM SEWER CALCULATIONS

IDS ENGINEERING GROUP

CLIENT NAME: **CITY OF HOUSTON**
PROJECT NAME: **WBS NO. R-000267-0179-3 - LOCKWOOD LIFT STATION**
IDS JOB NO: **0057-085-00**
DATE PRINTED: November 10, 2025
DATE REVISED: October 8, 2025 BY: CM

SELECT STORM EVENT FREQUENCY: 2 year
SELECT APPROPRIATE LAND USE: Light Industrial
ENTER DESIGN CURB HEIGHT (inches): 0

Re-Generate Formulas

Line	Manhole or Inlet Number U / S	D / S	Reach Length (feet)	Diameter or Rise (inches)	Span (inches)	No. of Barrels	Pipe Material	Pipe Grade Minimum (%)	Pipe Grade Actual (%)	Area (acres)	Sum of Area (acres)	Runoff Coeff.	Sum of C x Area (acres)	Travel Time (minutes)	Time of Concentration (minutes)	Intensity (in./hr.)	Sum of Flows (cfs)	Design Flow (cfs)	Design Velocity (fps)	Actual Velocity (fps)	Hydraulic Gradient (%)	Change in Head (feet)	Upstream Top of Grate (feet)	Hydraulic Grade Upstream (feet)	Hydraulic Grade Downstream (feet)	Manhole Drop (D/S) (feet)	Pipe Flowline Upstream (feet)	Pipe Flowline Downstream (feet)	Depth from Gutter to HGL (feet)	Depth of Cover (feet)	Upstream NG Elev. (feet)	Depth from NG to HGL (feet)
1	RCB	STM MH	21.23	36		1	RCP	0.110%	0.110%	0.07	0.07	0.65	0.05	13.43	21.3	4.08	0.19	22.12	3.13	0.03	0.000%	0.00	37.60	31.67	31.67	0.00	28.69	***28.67***	5.93	5.91	37.60	5.93
2	STM MH	***STM MH***	19.88	24		1	RCP	0.180%	0.180%		0.07	0.65	0.05	5.59	34.7	3.13	0.19	9.60	3.06	0.06	0.000%	0.00		30.63	30.63	0.00	28.67	***28.63***	***-30.63***	-30.67		-30.63

NOTES:
1. This spreadsheet has been developed using the City of Houston criteria outlined in the November 2023 Infrastructure Design Manual. The Rational Method has been used to calculate flows, and Manning's Formula for pipes flowing full has been used to calculate velocities.
2. This spreadsheet calculates rainfall intensity using the b, d, and e constants for Harris County and the City of Houston, as outlined in Appendix H of the Harris County Infrastructure Regulations, and Chapter 9 of the November 2023 City of Houston Infrastructure Design Manual.
3. Minimum storm sewer grades and maximum velocities as established in the City of Houston design criteria have been used to establish the grades used in this system.
4. Land Use "SFR" represents Single-Family Residential development. Land Use "MFR" represents Multi-Family Residential development.
5. Design flow and velocity are based entirely on pipe grade and represent the condition when pipe is flowing full with the hydraulic grade line equal to the pipe grade, and are used to demonstrate that the pipe slopes used in the calculations conform to the City of Houston minimum and maximum standards.

Runoff Coefficient Table	
Land Use	C
SFR (> ½ ac. lots)	0.35
SFR (¼ - ½ ac. lots)	0.45
SFR (< ¼ ac. lots)	0.55
MFR (< 20 d.u./ac.)	0.65
MFR (>= 20 d.u./ac.)	0.80
Business Districts	0.80
Light Industrial	0.65
Heavy Industrial	0.75
Railroad Yard Areas	0.30
Parks/Open Areas	0.18
Land Use Varies	ENTER

Pipe Material	Mannings "n" Value	Pipe Description
CLAY	0.012	Extra Strength Vitrified Clay Pipe
CMP	0.024	Corrugated Metal Pipe
CMPSI	0.013	CMP w/ Smooth Interior
HDPE	0.013	High Density Polyethylene Pipe
PVC	0.013	Polyvinyl Chloride Pipe
RCA	0.013	Reinforced Concrete Arch Pipe
RCB	0.015	Reinforced Concrete Box Culvert
RCE	0.013	Reinforced Concrete Elliptical Pipe
RCP	0.013	Reinforced Concrete Pipe

Rainfall Freq. (yrs)	b	d	e
2 year	***48.35***	***9.07***	***0.7244***
5 year	52.32	7.88	0.6900
10 year	54.68	6.96	0.6623
25 year	57.79	5.89	0.6294
50 year	61.00	5.46	0.6096
100 year	60.66	4.44	0.5797
500 year	62.17	2.95	0.5196

Master Spreadsheet - Storm Sewer Calculations Updated 02/10/2025
\\idseg.com\FS\Projects\0000\005708500 CoH Lift Stations - FY 2023\Eng\Calcs\Drainage\[2. South Point Drainage Calcs.xlsx]CALCULATIONS

STORM SEWER CALCULATIONS

IDS ENGINEERING GROUP

CLIENT NAME: **CITY OF HOUSTON**
PROJECT NAME: **WBS NO. R-000267-0179-3 - LOCKWOOD LIFT STATION**
IDS JOB NO: **0057-085-00**
DATE PRINTED: November 10, 2025
DATE REVISED: October 8, 2025 BY: CM

SELECT STORM EVENT FREQUENCY: 100 year
SELECT APPROPRIATE LAND USE: Light Industrial
ENTER DESIGN CURB HEIGHT (inches): 0

Re-Generate Formulas

Line	Manhole or Inlet Number U / S	D / S	Reach Length (feet)	Diameter or Rise (inches)	Span (inches)	No. of Barrels	Pipe Material	Pipe Grade Minimum (%)	Pipe Grade Actual (%)	Area (acres)	Sum of Area (acres)	Runoff Coeff.	Sum of C x Area (acres)	Travel Time (minutes)	Time of Concentration (minutes)	Intensity (in./hr.)	Sum of Flows (cfs)	Design Flow (cfs)	Design Velocity (fps)	Actual Velocity (fps)	Hydraulic Gradient (%)	Change in Head (feet)	Upstream Top of Grate (feet)	Hydraulic Grade Upstream (feet)	Hydraulic Grade Downstream (feet)	Manhole Drop (D/S) (feet)	Pipe Flowline Upstream (feet)	Pipe Flowline Downstream (feet)	Depth from Gutter to HGL (feet)	Depth of Cover (feet)	Upstream NG Elev. (feet)	Depth from NG to HGL (feet)
1	RCB	STM MH	21.23	36		1	RCP	0.110%	0.110%	0.07	0.07	0.65	0.05	5.93	21.3	9.24	0.42	22.12	3.13	0.06	0.000%	0.00	37.60	31.67	31.67	0.00	28.69	***28.67***	5.93	5.91	37.60	5.93
2	STM MH	***STM MH***	19.88	24		1	RCP	0.180%	0.180%		0.07	0.65	0.05	2.47	27.2	8.19	0.42	9.60	3.06	0.13	0.000%	0.00		30.63	30.63	0.00	28.67	***28.63***	***-30.63***	-30.67		-30.63

NOTES:
1. This spreadsheet has been developed using the City of Houston criteria outlined in the November 2023 Infrastructure Design Manual. The Rational Method has been used to calculate flows, and Manning's Formula for pipes flowing full has been used to calculate velocities.
2. This spreadsheet calculates rainfall intensity using the b, d, and e constants for Harris County and the City of Houston, as outlined in Appendix H of the Harris County Infrastructure Regulations, and Chapter 9 of the November 2023 City of Houston Infrastructure Design Manual.
3. Minimum storm sewer grades and maximum velocities as established in the City of Houston design criteria have been used to establish the grades used in this system.
4. Land Use "SFR" represents Single-Family Residential development. Land Use "MFR" represents Multi-Family Residential development.
5. Design flow and velocity are based entirely on pipe grade and represent the condition when pipe is flowing full with the hydraulic grade line equal to the pipe grade, and are used to demonstrate that the pipe slopes used in the calculations conform to the City of Houston minimum and maximum standards.

Runoff Coefficient Table	
Land Use	C
SFR (> ½ ac. lots)	0.35
SFR (¼ - ½ ac. lots)	0.45
SFR (< ¼ ac. lots)	0.55
MFR (< 20 d.u./ac.)	0.65
MFR (>= 20 d.u./ac.)	0.80
Business Districts	0.80
Light Industrial	0.65
Heavy Industrial	0.75
Railroad Yard Areas	0.30
Parks/Open Areas	0.18
Land Use Varies	ENTER

Pipe Material	Mannings "n" Value	Pipe Description
CLAY	0.012	Extra Strength Vitrified Clay Pipe
CMP	0.024	Corrugated Metal Pipe
CMPSI	0.013	CMP w/ Smooth Interior
HDPE	0.013	High Density Polyethylene Pipe
PVC	0.013	Polyvinyl Chloride Pipe
RCA	0.013	Reinforced Concrete Arch Pipe
RCB	0.015	Reinforced Concrete Box Culvert
RCE	0.013	Reinforced Concrete Elliptical Pipe
RCP	0.013	Reinforced Concrete Pipe

Rainfall Freq. (yrs)	b	d	e
2 year	48.35	9.07	0.7244
5 year	52.32	7.88	0.6900
10 year	54.68	6.96	0.6623
25 year	57.79	5.89	0.6294
50 year	61.00	5.46	0.6096
100 year	***60.66***	***4.44***	***0.5797***
500 year	62.17	2.95	0.5196

Master Spreadsheet - Storm Sewer Calculations Updated 02/10/2025
\\idseg.com\FS\Projects\0000\005708500 CoH Lift Stations - FY 2023\Eng\Calcs\Drainage\[2. South Point Drainage Calcs.xlsx]CALCULATIONS

IDS Engineering Group
13430 NW. Freeway, Suite 700
Houston, Tx. 77040
713.462.3178
TxEng Firm 2726 | TxSurv Firm 10110700

SURVEYED BY: KUO & ASSOCIATES, INC.
TBPE FIRM #F-4578; TBPLS FIRM #1007560

THIS DOCUMENT IS RELEASED FOR THE PURPOSE OF REVIEW UNDER THE AUTHORITY OF MARCEL KHOUW, P.E. 101807 ON 12/17/2025. IT IS NOT TO BE USED FOR CONSTRUCTION PURPOSES.

CITY OF HOUSTON
HOUSTON PUBLIC WORKS

LIFT STATION RENEWAL AND REPLACEMENT FY 2023

SOUTH POINT LIFT STATION DRAINAGE CALCULATIONS

WBS NUMBER	FOR CITY OF HOUSTON USE ONLY
R-000267-0179-4	
DRAWING SCALE	
HORIZ: N/A VERT: N/A	
CITY OF HOUSTON PM	
NAWARAJ PANTA, P.E.	
SHEET NO. 72 OF 321	

DWG. NO. SPT-C-06

NO.	DATE	REVISION	APP.

FILE PATH: \\idseg.com\FS\Projects\0000\005708500 CoH Lift Stations - FY 2023\CAD\DWG\PRODUCTION\72-SOUTH PNT CALCULATIONS.dwg

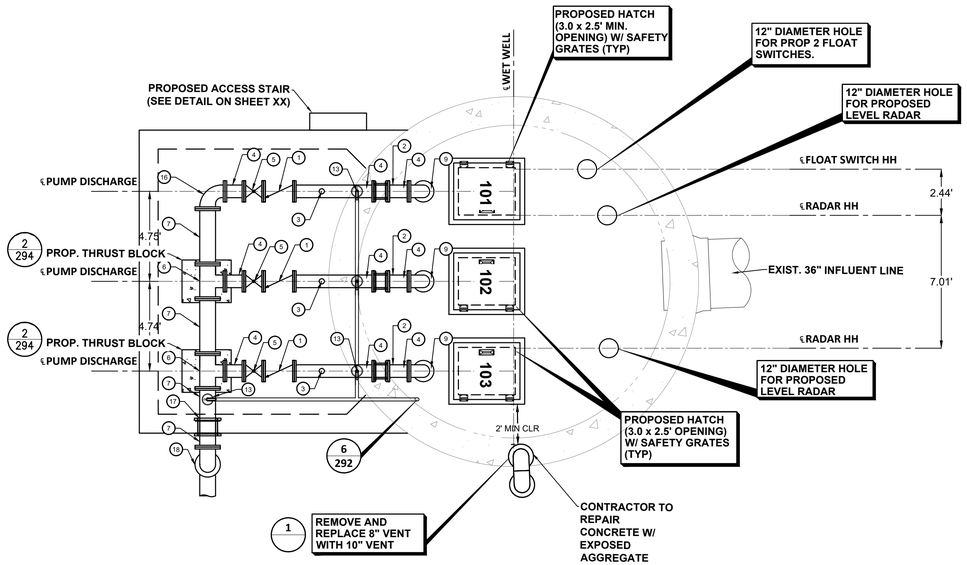

PLAN VIEW AT GRADE

SCALE: 1"=4'

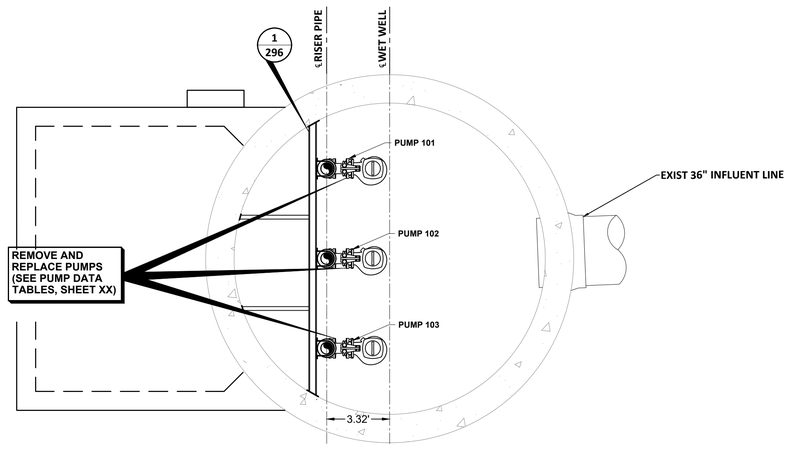

SECTION A-A VIEW A

SCALE: 1" = 4'

KEYED NOTE	ITEM	QTY
1	CHECK VALVE (8")	3
2	FLEXIBLE COUPLING (8")	3
3	PRESSURE GAUGE ASSEMBLY	3
4	SPOOL PIECE (8")	7
5	PLUG VALVE (8")	3
6	TEE (10" x 8")	2
7	SPOOL PIECE (10")	4
8	RISER PIPING (8")	3
9	90° ELBOW (8")	3
11	316 STAINLESS STEEL SUPPORT	6
12	45° BEND (8")	6
13	2" AIR RELEASE & VACUUM VALVE ASSEMBLY	4
14	ADJUSTABLE PIPE SUPPORT	3
15	ECCENTRIC REDUCER (8"x6")	3
16	REDUCING 90 DEGREE BEND TEE (10" X 8") W/ BLIND FLANGE (10")	1
17	FLEXIBLE COUPLING (10")	1
18	90° BEND (10")	1

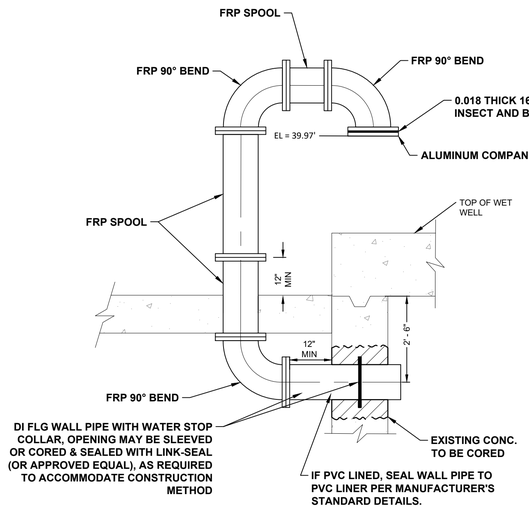

EXISTING STRUCTURE PENETRATION 1

N.T.S.

NOTES:

1. ABRASIVE BLAST AND COAT ALL PIPING AND FITTINGS NOT BEING REPLACED IN WET WELL.
2. CONTRACTOR TO VERIFY DIMENSIONS REQUIRED TO INSTALL AND OPERATE VALVES.
3. EXISTING LIFT STATION WET WELL STRUCTURE TO REMAIN.
4. UV PROTECTIVE COATINGS ARE REQUIRED BY THE CITY OF HOUSTON ON ALL VENT PIPES.
5. LABEL HATCHES WITH THE CORRESPONDING PUMP NUMBER USING A 12–INCH BY 6–INCH ALUMINUM PLATE ENGRAVED WITH 1.5–INCH LETTERING WELDED TO THE HATCH.
6. CONTRACTOR TO CONFIRM SIZE AND LOCATION OF THE WET WELL HATCHES PER HATCH AND PUMP MANUFACTURER REQUIREMENT.
7. PUMP AND ANCHOR BOLTS ARE TO BE ADHESIVE TYPE, AND EMBEDDED IN THE CONCRETE SLAB. CONTRACTOR TO SUBMIT DESIGN OF PUMP ANCHOR BOLTS AND PATTERN, INCLUDING CALCULATIONS, DURING SHOP DRAWING SUBMISSION.
8. ALL PIPING IN THE WET WELL SHALL BE FLANGED. NO FLANGED COUPLING ADAPTORS, OR VICTAULIC STYLE COUPLINGS SHALL BE PERMITTED INSIDE OF THE WET WELL.
9. ACCESS HATCHES SHALL BE FOREST GREEN. SAFETY GRATING SHALL BE FURNISHED WITH SAFETY ORANGE POWDER COAT FINISH.

NO.	DATE	REVISION	APP.

LEGEND

- # / # — DETAIL NO. / SHEET NO.
- EXISTING CONCRETE
- PROPOSED CONCRETE
- REMOVE AND REPLACE CONCRETE AS PER DETAIL 11, SHEET XX.

IDS Engineering Group
13430 NW. Freeway, Suite 700
Houston, Tx. 77040
713.462.3178
TxEng Firm 2726 | TxSurv Firm 10110700

SURVEYED BY: KUO & ASSOCIATES, INC.
TBPE FIRM #F-4578; TBPLS FIRM #1007560

THIS DOCUMENT IS RELEASED FOR THE PURPOSE OF REVIEW UNDER THE AUTHORITY OF MARCEL KHOUW, P.E. 101807 ON 12/17/2025. IT IS NOT TO BE USED FOR CONSTRUCTION PURPOSES.

CITY OF HOUSTON
HOUSTON PUBLIC WORKS

LIFT STATION RENEWAL AND REPLACEMENT FY 2023

SOUTH POINT LIFT STATION PLAN AT GRADE AND BASE

WBS NUMBER	FOR CITY OF HOUSTON USE ONLY
R–000267–0179–4	
DRAWING SCALE	
HORIZ: AS NOTED VERT: N/A	
CITY OF HOUSTON PM	
NAWARAJ PANTA, P.E.	
SHEET NO. 73 OF 321	

DWG. NO. SPT–C–07

PLOTTED: 12/17/2025 8:03 AM
FILE PATH: \\idseg.com\FS\Projects\0000\005708500 CoH Lift Stations – FY 2023\CAD\DWG\PRODUCTION\73–SOUTH PNT PLAN AT GRADE.dwg

PLOTTED: 12/17/2025 9:50 AM

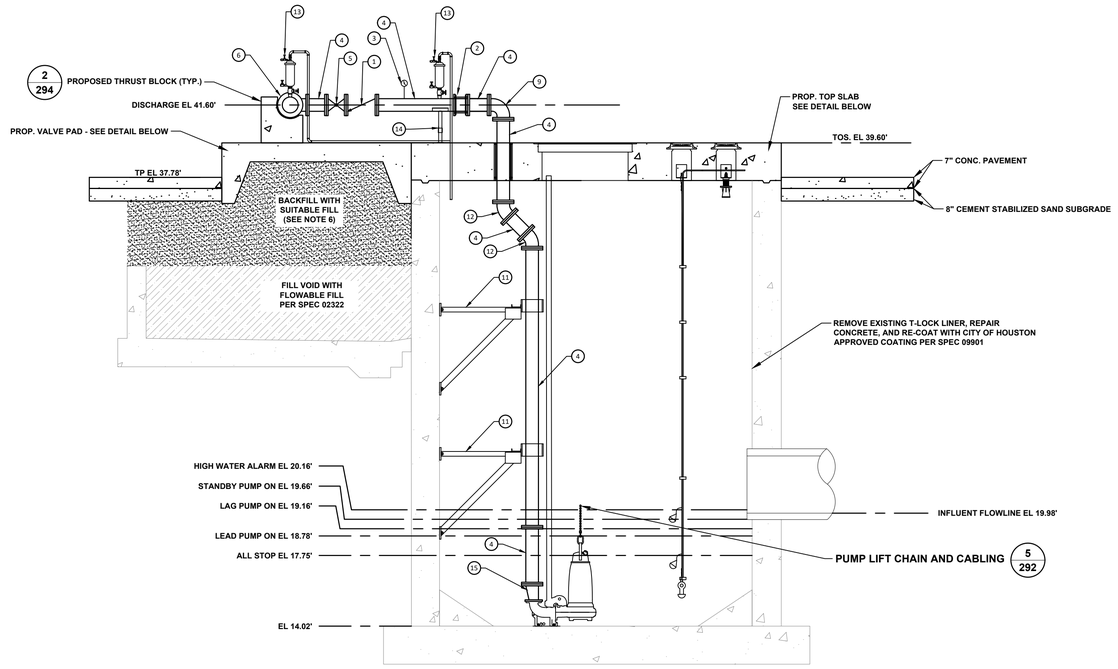

SECTIONAL ELEVATION A

SCALE: 1" = 4'

DESIGN POINT
1,597 GPM @ 50.46 FT

SOUTH POINT LIFT STATION
REHABILITATION - FLYGT 6030 N150

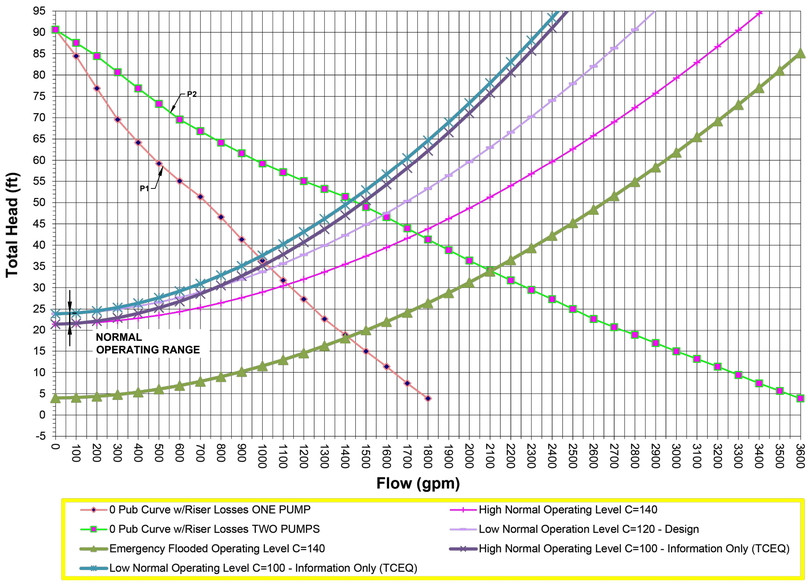

STATION OPERATING TABLES		
PROPOSED CONDITION - 2.3 MGD		
RISING WATER LEVEL		
WATER LEVEL ELEVATION	ACTION	PUMP(S) IN OPERATION
17.75	PUMPS OFF LEVEL - NO ACTION	ALL PUMPS ARE OFF
18.78	LEAD PUMP TURNS ON	LEAD PUMP ON
19.16	LAG PUMP TURNS ON	LEAD AND LAG PUMP ON
19.66	STANDBY PUMP TURNS ON	ALL PUMPS ON
20.16	HIGH WATER ALARM ON	HIGH WATER ALARM SOUND
FALLING WATER LEVEL		
WATER LEVEL ELEVATION	ACTION	PUMP(S) IN OPERATION
20.16	HIGH WATER ALARM ON	HIGH WATER ALARM SOUND
19.66	STANDBY PUMP & HIGH WATER LEVEL ALARM OFF	LEAD AND LAG PUMP ON
18.78	LEAD PUMP TURNS OFF	LAG PUMP ON
17.75	LAG PUMP TURNS OFF	ALL PUMPS STOPPED - STANDBY PUMP SWITCHES TO LEAD PUMP PUMP ON

PUMP DATA TABLE*

PUMP CHARACTERISTICS	PUMP NO. 1	PUMP NO. 2	PUMP NO. 3
MOTOR DATA NOMIMAL SIZE (HP)	14	14	14
MAX SPEED (RPM)	1600	1600	1600
SOLIDS PASSAGE MINIMUM SPHERE (IN)	3	3	3
CAPACITY (GPM) DESIGN	800	800	800
RUNOUT	1800	1800	1800
Actual Cumulative Flow	1,050	1,600	
DISCHARGE HEAD (FT) DESIGN	35.16	35.16	35.16
RUNOUT	4	4	4
SHUT OFF	90.5	90.5	90.5
EFFICIENCY (%) DESIGN	76.6	77.6	76.6
NPSHR (FT) DESIGN	14.3	14.3	14.3

*FLYGT 6030 N150 used for all pump calculations.

NOTES:

1. ABRASIVE BLAST AND COAT ALL PIPING AND FITTINGS NOT BEING REPLACED IN WET WELL.
2. CONTRACTOR TO VERIFY DIMENSIONS REQUIRED TO INSTALL AND OPERATE VALVES.
3. EXISTING LIFT STATION WET WELL STRUCTURE TO REMAIN.
4. UV PROTECTIVE COATINGS ARE REQUIRED BY THE CITY OF HOUSTON ON ALL VENT PIPES.
5. LABEL HATCHES WITH THE CORRESPONDING PUMP NUMBER USING A 12–INCH BY 6–INCH ALUMINUM PLATE ENGRAVED WITH 1.5–INCH LETTERING WELDED TO THE HATCH.
6. FILL VOID LEFT BY REMOVAL OF EXISTING VALVE VAULT WITH SUITABLE FILL.
7. SEE ELECTRICAL PLANS FOR ADDITIONAL IMPROVEMENTS.
8. ABRASIVE BLAST AND COAT TO BE IN ACCORDANCE WITH SYSTEM 108 PER SPEC SECTION 09901 PART 2.03J.
9. CONTRACTOR TO CONFIRM SIZE AND LOCATION OF THE WET WELL HATCHES PER HATCH AND PUMP MANUFACTURER REQUIREMENTS
10. PUMP AND ANCHOR BOLTS ARE TO BE ADHESIVE TYPE, AND EMBEDDED IN THE CONCRETE SLAB. CONTRACTOR TO SUBMIT DESIGN OF PUMP ANCHOR BOLTS AND PATTERN, INCLUDING CALCULATIONS, DURING SHOP DRAWING SUBMISSION.
11. ALL PIPING IN THE WET WELL SHALL BE FLANGED. NO FLANGED COUPLING ADAPTORS, OR VICTAULIC STYLE COUPLINGS SHALL BE PERMITTED INSIDE OF THE WET WELL.
12. ACCESS HATCHES SHALL BE FOREST GREEN. SAFETY GRATING SHALLBE FURNISHED WITH SAFETY ORANGE POWDER COAT FINISH.
13. INSTALL PLUG VALVES TO OPEN UPWARDS AND TO CLOSE TO A SEATING POSITION.
14. INSTALL CHECK VALVE SO THAT THE WEIGHT LEVER POSITION IS APPROXIMATLEY 45 DEGREE BELOW THE VALVE HORIZONTAL CENTER LINE IN THE VALVE HORIZONTAL CENTER LINE IN THE FULL OPEN POSITION.

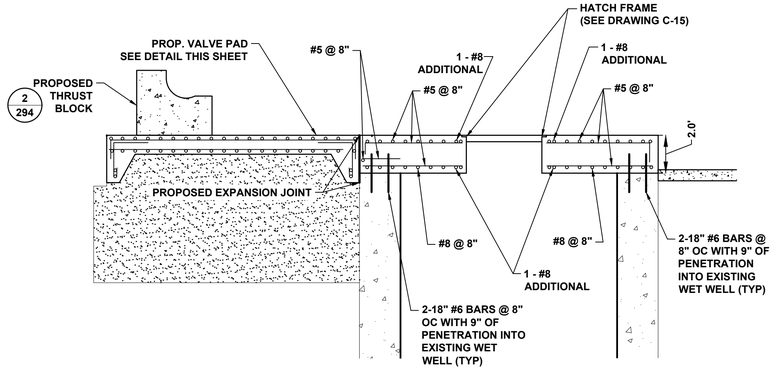

WET WELL TOP SLAB DETAIL

SCALE: 1"=4'

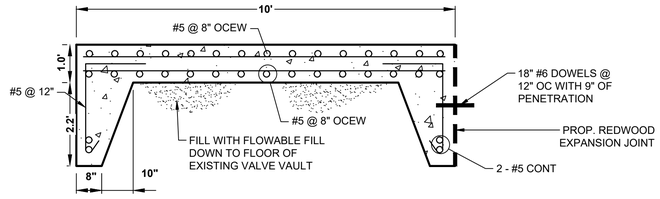

DISCHARGE PIPING CONCRETE SLAB DETAIL

SCALE: 1" = 2'

LEGEND

- # / # — DETAIL NO. / SHEET NO.
- EXISTING CONCRETE
- PROPOSED CONCRETE
- PROP. FLOWABLE FILL

NO.	DATE	REVISION	APP.

KEYED NOTE	ITEM	QTY
1	CHECK VALVE (8")	3
2	FLEXIBLE COUPLING (8")	3
3	PRESSURE GAUGE ASSEMBLY	4
4	SPOOL PIECE (8")	7
5	PLUG VALVE (8")	3
6	TEE (10" x 8")	2
7	SPOOL PIECE (10")	4
8	RISER PIPING (8")	3
9	90° ELBOW (8")	3
11	316 STAINLESS STEEL SUPPORT	6
12	45° BEND (8")	6
13	2" AIR RELEASE & VACUUM VALVE ASSEMBLY	4
14	ADJUSTABLE PIPE SUPPORT	3
15	ECCENTRIC REDUCER (8"x6")	3
16	TEE (10" X 8") W/ BLIND FLANGE (10")	1
17	FLEXIBLE COUPLING (10")	1
18	90° BEND (10")	1

IDS Engineering Group
13430 NW. Freeway, Suite 700
Houston, Tx. 77040
713.462.3178
TxEng Firm 2726 | TxSurv Firm 10110700

SURVEYED BY: KUO & ASSOCIATES, INC.
TBPE FIRM #F-4578; TBPLS FIRM #1007560

THIS DOCUMENT IS RELEASED FOR THE PURPOSE OF REVIEW UNDER THE AUTHORITY OF MARCEL KHOUW, P.E. 101807 ON 12/17/2025. IT IS NOT TO BE USED FOR CONSTRUCTION PURPOSES.

CITY OF HOUSTON
HOUSTON PUBLIC WORKS

LIFT STATION RENEWAL AND REPLACEMENT FY 2023

SOUTH POINT LIFT STATION ELEVATION SECTION

WBS NUMBER	FOR CITY OF HOUSTON USE ONLY
R-000267-0179-4	
DRAWING SCALE	
HORIZ: AS NOTED VERT: N/A	
CITY OF HOUSTON PM	
NAWARAJ PANTA, P.E.	
DWG. NO. SPT-C-08	SHEET NO. 74 OF 321

FILE PATH: \\idseg.com\FS\Projects\0000\005708500 CoH Lift Stations - FY 2023\CAD\DWG\PRODUCTION\74-SOUTH PNT ELEV SECTION.dwg

PLOTTED: 12/17/2025 8:04 AM
FILE PATH: \\dseg.com\FS\Projects\0000\005708500 CoH Lift Stations - FY 2023\CAD\DWG\PRODUCTION\75-SOUTH PNT RECORD DWG.dwg

NO.	DATE	REVISION	APP.

NOTES

1. SEE DETAIL AND STRUCTURAL DRAWINGS FOR DIMENSIONS AND INFORMATION NOT SHOWN.
2. CONTRACTOR TO CONFIRM SIZE AND LOCATION OF THE WET WELL HATCHES PER SELECTED HATCH AND PUMP MANUFACTURERS' REQUIREMENTS.

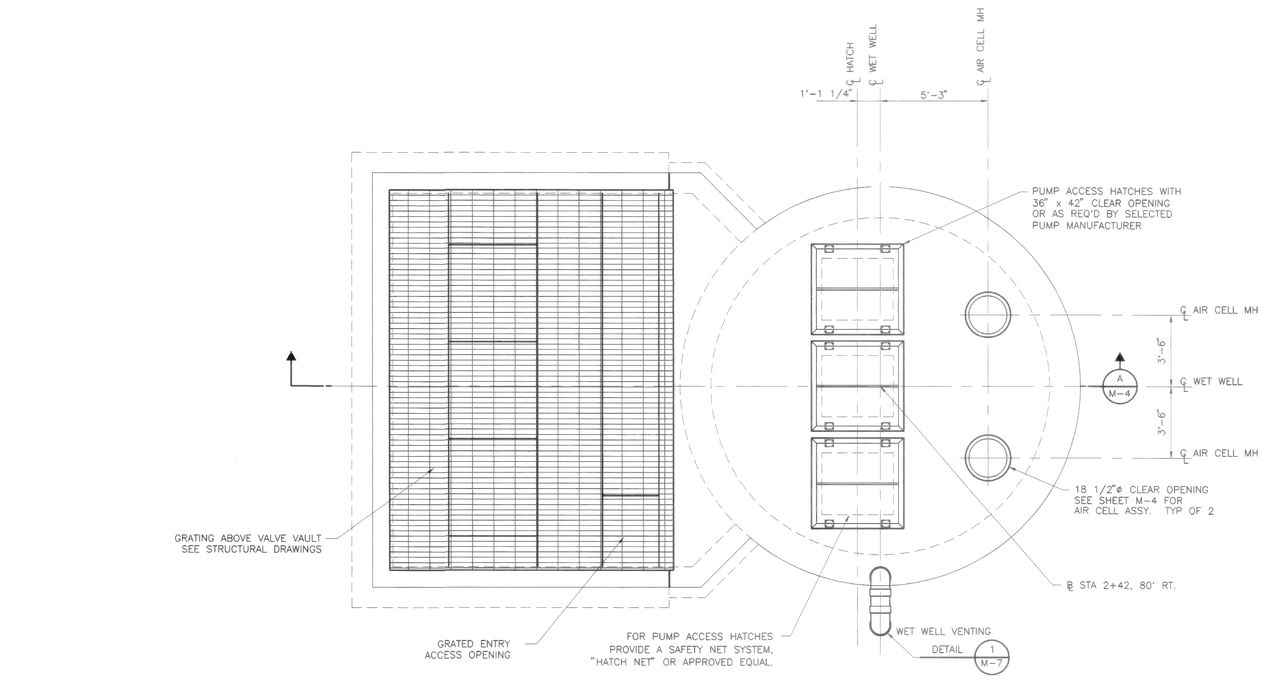

PLAN VIEW @ GRADE

SEAL
STATE OF TEXAS
DAVID J. ROSS
68267
REGISTERED
PROFESSIONAL ENGINEER

CADD DWG FILE NO : D:\62400\M-2.DWG

0 1 2 3 ORIGINAL SCALE IN INCHES FOR REDUCED PLANS

REV. NO.	DESCRIPTION	APP'D	DATE

AS BUILT

Binkley & Barfield, Inc.
Consulting Engineers
1710 Seamist Drive Houston, Texas 77008

LIFT STATION
PLAN
MECHANICAL

PROJECT NO.
R-1209-02-3

TITLE
SOUTHPOINT LIFT STATION, FORCE MAIN, AND RELIEF SEWER

CITY OF HOUSTON
DEPARTMENT OF PUBLIC WORKS AND ENGINEERING
ENGINEERING, CONSTRUCTION AND REAL ESTATE GROUP

SECTION APPROVALS

WATER ENGINEERING	TRAFFIC AND DRAIN. ENGINEERING 8/13/26
WASTEWATER ENGINEERING 8/13/26	STREET & BRIDGE ENGINEERING
STORM SEWER ENGINEERING 8/13/26	CONSTRUCTION 8/14/26

OTHER DEPARTMENTS

PLANNING AND DEVELOPMENT SPONSOR DEPARTMENT

CITY ENGINEER DATE 8/14/26
DIRECTOR OF PUBLIC WORKS AND ENGINEERING DATE 8/12/26

SUBMITTED: MAY 24, 1996	DESIGNED BY: RCB
SCALE: 3/8"=1'-0"	DRAWN BY: AAA
DATE: MAY, 1996	SHEET: M-2
SURVEY BY: RATNALA & BAHL INC	SHT NO. 36 of 71 SHTS
F B NO: P-3052 & P-3052-A	CITY DWG NO: 32661

IDS Engineering Group
13430 NW. Freeway, Suite 700
Houston, Tx. 77040
713.462.3178
TxEng Firm 2726 | TxSurv Firm 10110700

SURVEYED BY: KUO & ASSOCIATES, INC.
TBPE FIRM #F-4578; TBPLS FIRM #1007560

THIS DOCUMENT IS RELEASED FOR THE PURPOSE OF REVIEW UNDER THE AUTHORITY OF MARCEL KHOUW, P.E. 101807 ON 12/17/2025. IT IS NOT TO BE USED FOR CONSTRUCTION PURPOSES.

CITY OF HOUSTON
HOUSTON PUBLIC WORKS

LIFT STATION RENEWAL AND REPLACEMENT FY 2023

EXISTING LIFT STATION RECORD DRAWING (SHEET 1 OF 3)

WBS NUMBER	FOR CITY OF HOUSTON USE ONLY
R-000267-0179-4	
DRAWING SCALE	
HORIZ: N.T.S. VERT: N/A	
CITY OF HOUSTON PM	
NAWARAJ PANTA, P.E.	
SHEET NO. 75 OF 321	

DWG. NO.
SPT-C-09

FOR REFERENCE ONLY

PLOTTED: 12/17/2025 8:04 AM

FILE PATH: \\tdseg.com\FS\Projects\0000\005708500 CoH Lift Stations - FY 2023\CAD\DWG\PRODUCTION\76-SOUTH PNT RECORD DWG.dwg

NO.	DATE	REVISION	APP.

NOTES

1. SEE DETAIL AND STRUCTURAL DRAWINGS DIMENSIONS AND INFORMATION NOT SHOWN
2. ✳ DIMENSIONS NOTED ARE RELATIVE TO THE PUMP SIZE AND MANUFACTURER SELECTED. CONTRACTOR SHALL CONFIRM.

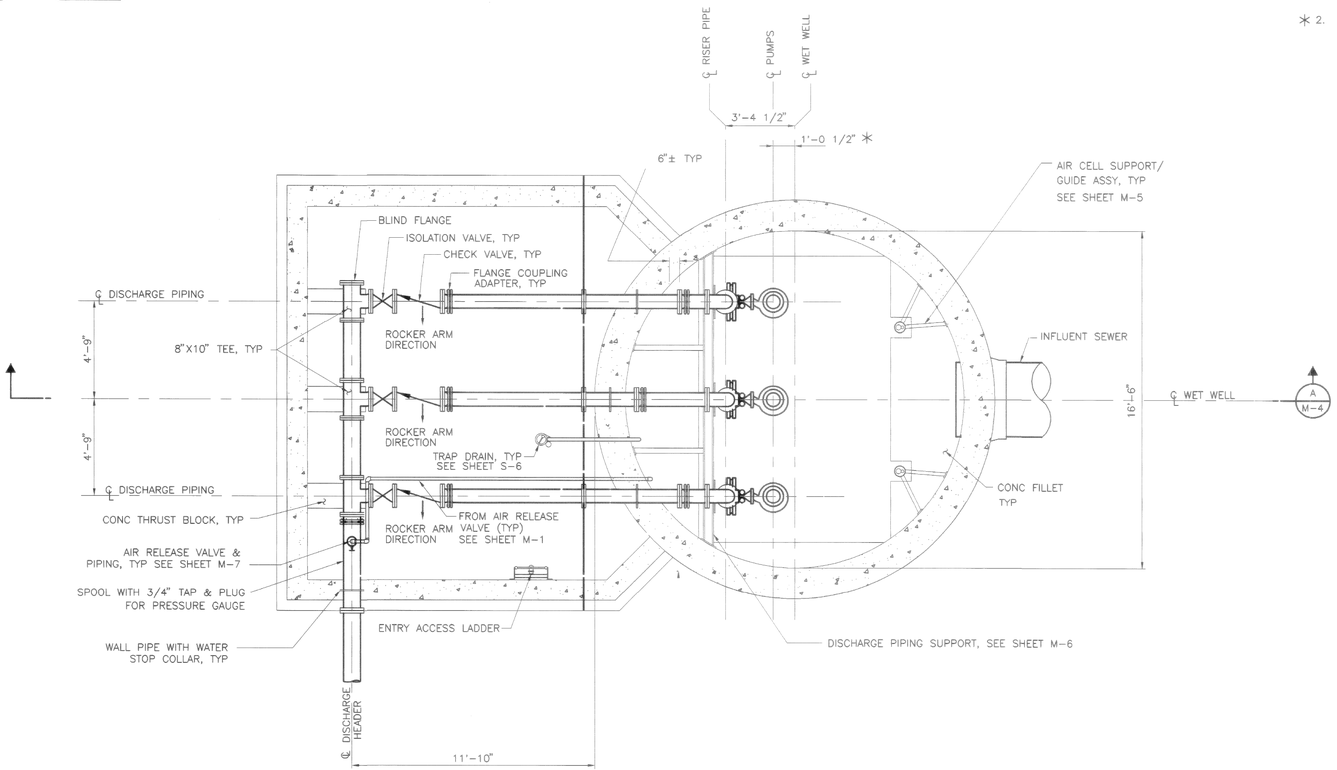

PLAN VIEW @ DISCHARGE PIPING

SEAL
STATE OF TEXAS
DAVID J. ROSS
68267
REGISTERED
PROFESSIONAL ENGINEER

CADD DWG FILE NO. D:\62400\M-3.DWG

0 1 2 3 ORIGINAL SCALE IN INCHES FOR REDUCED PLANS

REV NO.	DESCRIPTION	APP'D	DATE

AS BUILT

Binkley & Barfield, Inc.
Consulting Engineers
1710 Seamist Drive Houston, Texas 77008

LIFT STATION
PLAN SECTION
MECHANICAL

PROJECT NO. R-1209-02-3

TITLE SOUTHPOINT LIFT STATION, FORCE MAIN, AND RELIEF SEWER

CITY OF HOUSTON
DEPARTMENT OF PUBLIC WORKS AND ENGINEERING
ENGINEERING, CONSTRUCTION AND REAL ESTATE GROUP

SECTION APPROVALS

WATER ENGINEERING 8-13-96	TRAFFIC AND SIGNAL ENGINEERING 8/13/96
WASTEWATER ENGINEERING 8/9/96	STREET & BRIDGE ENGINEERING
STORM SEWER ENGINEERING 8/15/96	CONSTRUCTION 8/14/96

OTHER DEPARTMENTS

PLANNING AND DEVELOPMENT SPONSOR DEPARTMENT

CITY ENGINEER DATE 8/14/96
DIRECTOR OF PUBLIC WORKS AND ENGINEERING DATE 8/14/96

SUBMITTED: MAY 24, 1996
SCALE: 3/8"=1'-0"
DATE: MAY, 1996
SURVEY BY: RATNALA & BAHL, INC
F B NO: P-3052 & P-3052-A

DESIGNED BY: RCB
DRAWN BY: AAA
SHEET: M-3
SHT NO 37 of 71 SHTS

CITY DWG NO: 32661

IDS Engineering Group
13430 NW. Freeway, Suite 700
Houston, Tx. 77040
713.462.3178
TxEng Firm 2726 | TxSurv Firm 10110700

SURVEYED BY: KUO & ASSOCIATES, INC.
TBPE FIRM #F-4578; TBPLS FIRM #1007560

THIS DOCUMENT IS RELEASED FOR THE PURPOSE OF REVIEW UNDER THE AUTHORITY OF MARCEL KHOUW, P.E. 101807 ON 12/17/2025. IT IS NOT TO BE USED FOR CONSTRUCTION PURPOSES.

CITY OF HOUSTON
HOUSTON PUBLIC WORKS

LIFT STATION RENEWAL AND REPLACEMENT FY 2023

EXISTING LIFT STATION RECORD DRAWING (SHEET 2 OF 3)

WBS NUMBER	FOR CITY OF HOUSTON USE ONLY
R-000267-0179-4	
DRAWING SCALE	
HORIZ: N.T.S. VERT: N/A	
CITY OF HOUSTON PM	
NAWARAJ PANTA, P.E.	
SHEET NO. 76 OF 321	

DWG. NO. SPT-C-10

FOR REFERENCE ONLY

PLOTTED: 12/17/2025 8:04 AM

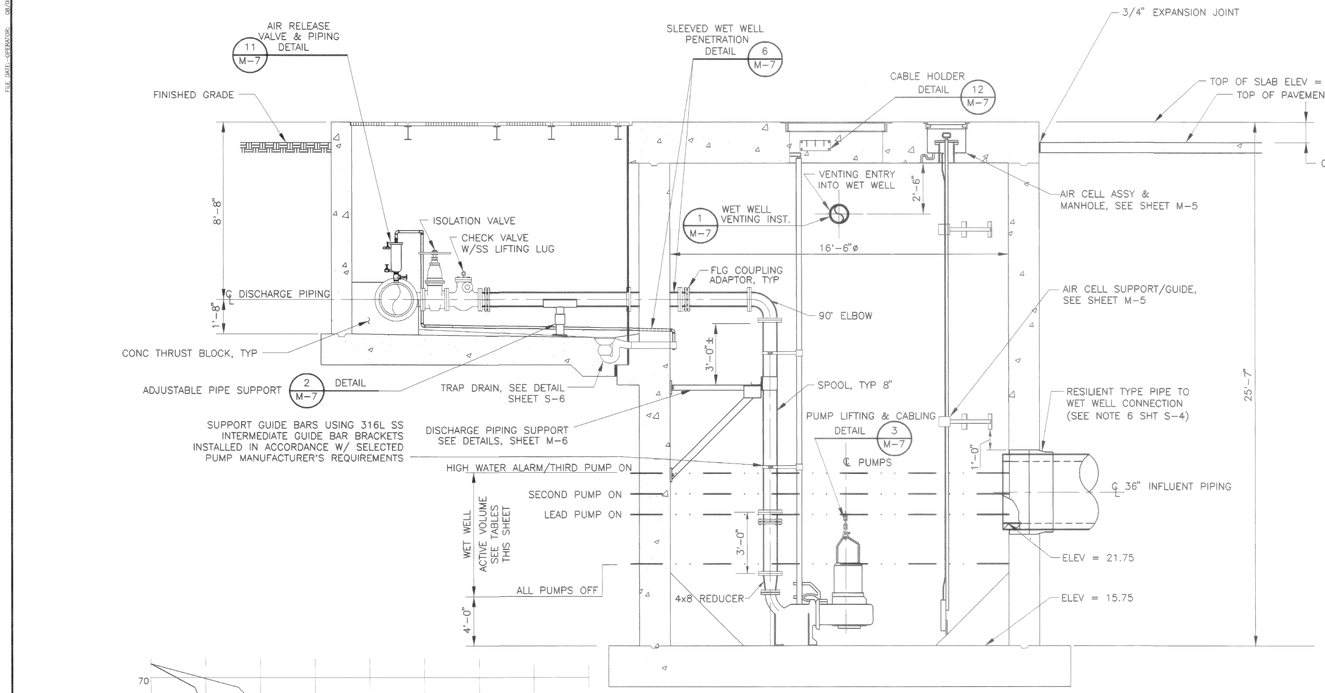

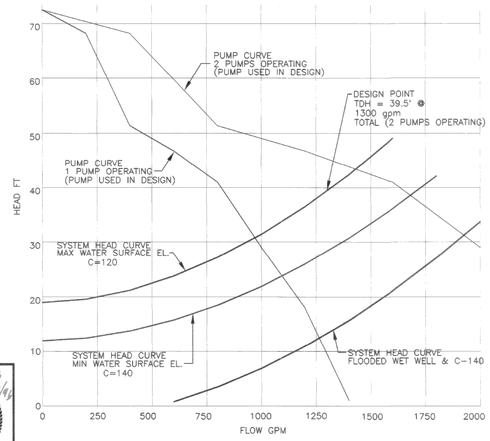

SECTION A M-2

ALL WET WELL FILLETS NOT SHOWN FOR CLARITY

NOTES:

1. DIMENSIONS NOTED ARE RELATIVE TO THE PUMP SIZE AND MANUFACTURER SELECTED. CONTRACTOR SHALL VERIFY.
2. SEE DETAIL AND STRUCTURAL DRAWINGS FOR DIMENSIONS AND INFORMATION NOT SHOWN.

STATION OPERATION TABLES

SOUTH POINT LS		
RISING LEVEL CYCLE		
WATER LEVEL ELEVATION	ACTION	PUMP(S) IN OPERATION
19.75	PUMPS OFF LEVEL – NO ACTION	ALL PUMPS ARE OFF
22.18	LEAD PUMP TURNS ON	LEAD PUMP ON
23.18	SECOND PUMP TURNS ON	LEAD & SECOND PUMP ON
24.18	SPARE PUMP TURNS ON	ALL PUMPS ON
24.18	HIGH WATER ALARM ON	HIGH WATER ALARM SOUND
FALLING LEVEL CYCLE		
WATER LEVEL ELEVATION	ACTION	PUMP(S) IN OPERATION
23.68	HIGH WATER LEVEL ALARM OFF	ALL PUMPS ON
20.75	LEAD PUMP TURNS OFF	SECOND & SPARE PUMPS ON
19.75	SECOND PUMP TURNS OFF	SPARE PUMP ON
19.75	SPARE PUMP TURNS OFF	ALL PUMPS STOPPED – SECOND PUMP SWITCHES TO LEAD PUMP

PUMP(S) IN OPERATION	OPERATING CAPACITY TOTAL GPM	OPERATING CAPACITY T.D. HEAD IN FEET	NOMINAL PUMP SPEED RPM	MINIMUM PUMP DISCHARGE SIZE
ONE PUMP ALONE	900	35.0	1150	4 x 4
TWO PUMPS IN PARALLEL *	1300	39.5		

AS BUILT

** INDICATES DESIGN CONDITION FOR PUMP SELECTION (RATED CAPACITY)*

SEAL: STATE OF TEXAS — DAVID J. ROSS — 68267 — LICENSED PROFESSIONAL ENGINEER

CADD DWG FILE NO : D:\62400\M-4.DWG

0 1 2 3 ORIGINAL SCALE IN INCHES FOR REDUCED PLANS

REV NO	DESCRIPTION	APP'D	DATE

Binkley & Barfield, Inc.
Consulting Engineers
1710 Seamist Drive Houston, Texas 77008

LIFT STATION
SECTION
MECHANICAL

PROJECT NO
R-1209-02-3

TITLE
SOUTHPOINT LIFT STATION, FORCE MAIN, AND RELIEF SEWER

CITY OF HOUSTON
DEPARTMENT OF PUBLIC WORKS AND ENGINEERING
ENGINEERING, CONSTRUCTION AND REAL ESTATE GROUP

SECTION APPROVALS

WATER ENGINEERING	TRAFFIC AND SIGNAL ENGINEERING 8/13/96
WASTEWATER ENGINEERING 8/9/96	STREET & BRIDGE ENGINEERING
STORM SEWER ENGINEERING	CONSTRUCTION 8/14/96

OTHER DEPARTMENTS

PLANNING AND DEVELOPMENT	SPONSOR DEPARTMENT

CITY ENGINEER — DATE 8/12/96

DIRECTOR OF PUBLIC WORKS AND ENGINEERING — DATE 8/14/96

SUBMITTED: MAY 24, 1996	DESIGNED BY: RCB
SCALE: 3/8" = 1'-0"	DRAWN BY: AAA
DATE: MAY, 1996	SHEET: M-4
SURVEY BY: RATNALA & BAHL INC	SHT NO 38 of 71 SHTS
F B NO: P-3052 & P-3052-A	CITY DWG NO: 32661

IDS Engineering Group
13430 NW. Freeway, Suite 700
Houston, Tx. 77040
713.462.3178
TxEng Firm 2726 | TxSurv Firm 10110700

SURVEYED BY: KUO & ASSOCIATES, INC.
TBPE FIRM #F-4578; TBPLS FIRM #1007560

THIS DOCUMENT IS RELEASED FOR THE PURPOSE OF REVIEW UNDER THE AUTHORITY OF MARCEL KHOUW, P.E. 101807 ON 12/17/2025. IT IS NOT TO BE USED FOR CONSTRUCTION PURPOSES.

CITY OF HOUSTON
HOUSTON PUBLIC WORKS

LIFT STATION RENEWAL AND REPLACEMENT FY 2023

EXISTING LIFT STATION RECORD DRAWING (SHEET 3 OF 3)

WBS NUMBER	FOR CITY OF HOUSTON USE ONLY
R-000267-0179-4	
DRAWING SCALE	
HORIZ: N.T.S. VERT: N/A	
CITY OF HOUSTON PM	
NAWARAJ PANTA, P.E.	

DWG. NO.	SHEET NO.
SPT-C-11	77 OF 321

FOR REFERENCE ONLY

NO.	DATE	REVISION	APP.

FILE PATH: \\idseg.com\FS\Projects\0000\005708500 CoH Lift Stations – FY 2023\CAD\DWG\PRODUCTION\77-SOUTH PNT RECORD DWG.dwg

PLOTTED: 12/11/2025 8:39 PM



EXISTING CONTROL PANEL (1)

PHOTOGRAPH A
NTS
-



EXISTING PUMP J-BOX NO.1, NO.2, NO.3 (2)

PHOTOGRAPH B
NTS
-



EXISTING SERVICE POLE AND SERVICE RACK (3)

PHOTOGRAPH C
NTS
-



EXISTING LIGHT POLE (4)

PHOTOGRAPH D
NTS
-

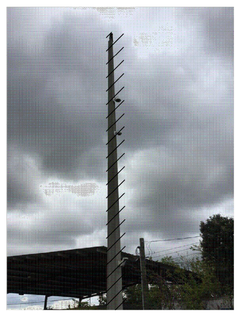

EXISTING WIMAX POLE (5)

PHOTOGRAPH E
NTS
-

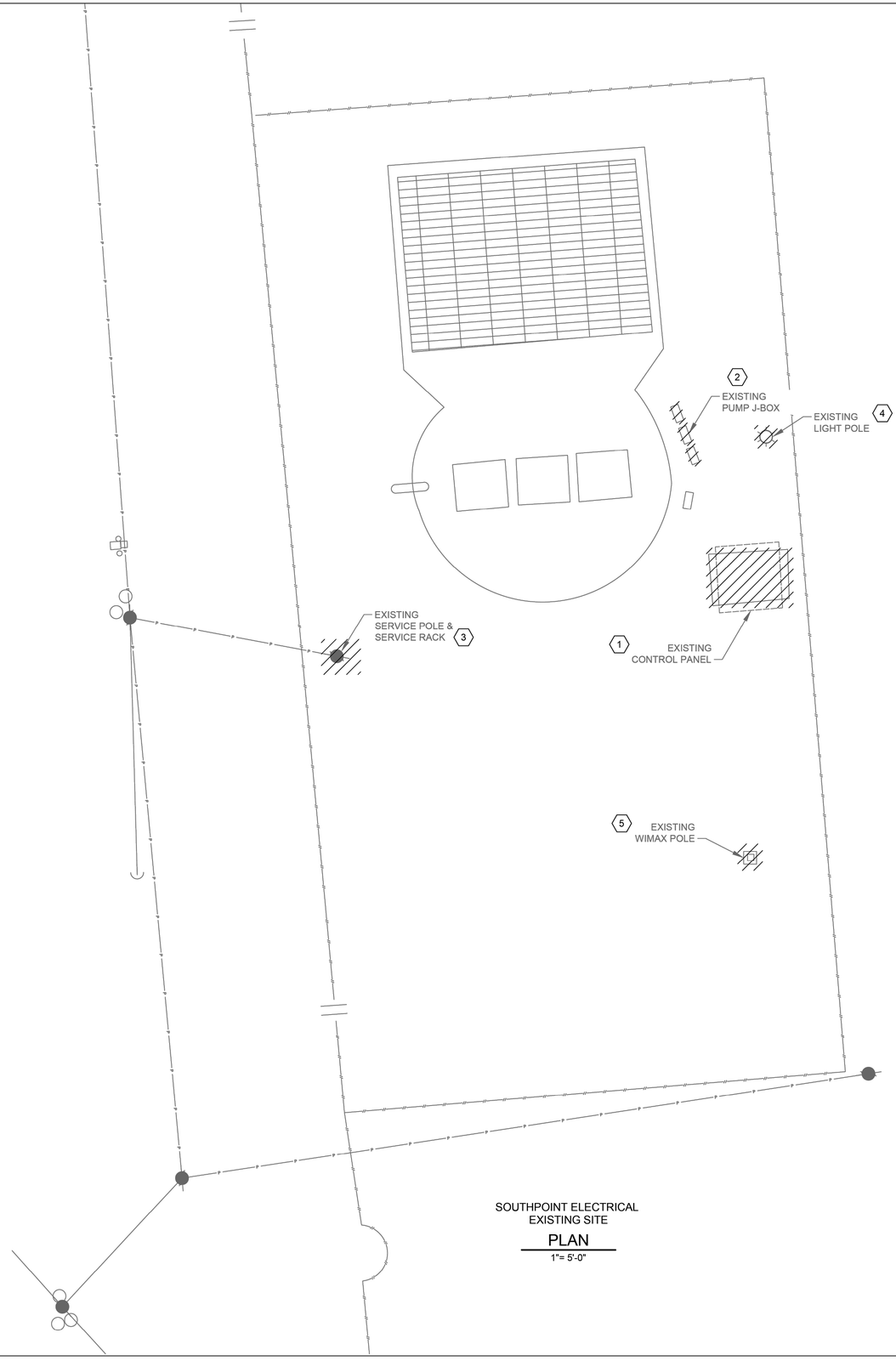

SOUTHPOINT ELECTRICAL EXISTING SITE PLAN
1"= 5'-0"

NOTES BY SYMBOL "#":

1. EXISTING CONTROL PANEL TO BE DEMOLISHED AND REMOVED.
2. EXISTING PUMP NO.1, NO.2, NO.3 J-BOX TO BE DEMOLISHED AND REMOVED.
3. EXISTING SERVICE POLE AND RACK TO BE DEMOLISHED AND REMOVED.
4. EXISTING LIGHT POLE TO BE DEMOLISHED AND REMOVED.
5. EXISTING WIMAX POLE TO BE DEMOLISHED AND REMOVED.

NO.	DATE	REVISION	APP.

FOR INTERIM REVIEW
ONLY NOT INTENDED FOR
PERMIT, BIDDING OR
CONSTRUCTION PURPOSES.
ENGINEER:
HOSS FOROUZAN
P.E. SERIAL NO.77748
12/15/2025

GAI
Gupta & Associates, Inc.
CONSULTING ENGINEERING
Registration No. F-2593
302 Dennis St.,
Houston, Texas 77006
Tel: 713-636-2916
Fax: 713-636-2987
email: hforouzan@gaiconsulting.com

IDS Engineering Group
13430 NW. Freeway
Suite 700
Houston, Tx. 77040
713.462.3178
TxEng Firm 2726
TxSurv Firm 10110700

CITY OF HOUSTON
HOUSTON PUBLIC WORKS

LIFT STATION RENEWAL
AND REPLACEMENT FY 2023

SOUTHPOINT LIFT STATION EXISTING SITE PLAN

WBS NUMBER	FOR CITY OF HOUSTON USE ONLY
R-000267-0179-4	
DRAWING SCALE	
HORIZ: VERT:	
CITY OF HOUSTON PM	
NAWARAJ PANTA, P.E.	
SHEET NO. 78 OF 321	

DWG. NO.
SPT-E-1

IDS JOB No. 0057-085-00

FILE PATH: O:\H8108_Lift Station Rehabilitation And Reconstruction (IDS)\6 Drawings\Electrical\Working\South Point\H8108_SPT-E-01.dwg

PLOTTED: 12/11/2025 8:39 PM

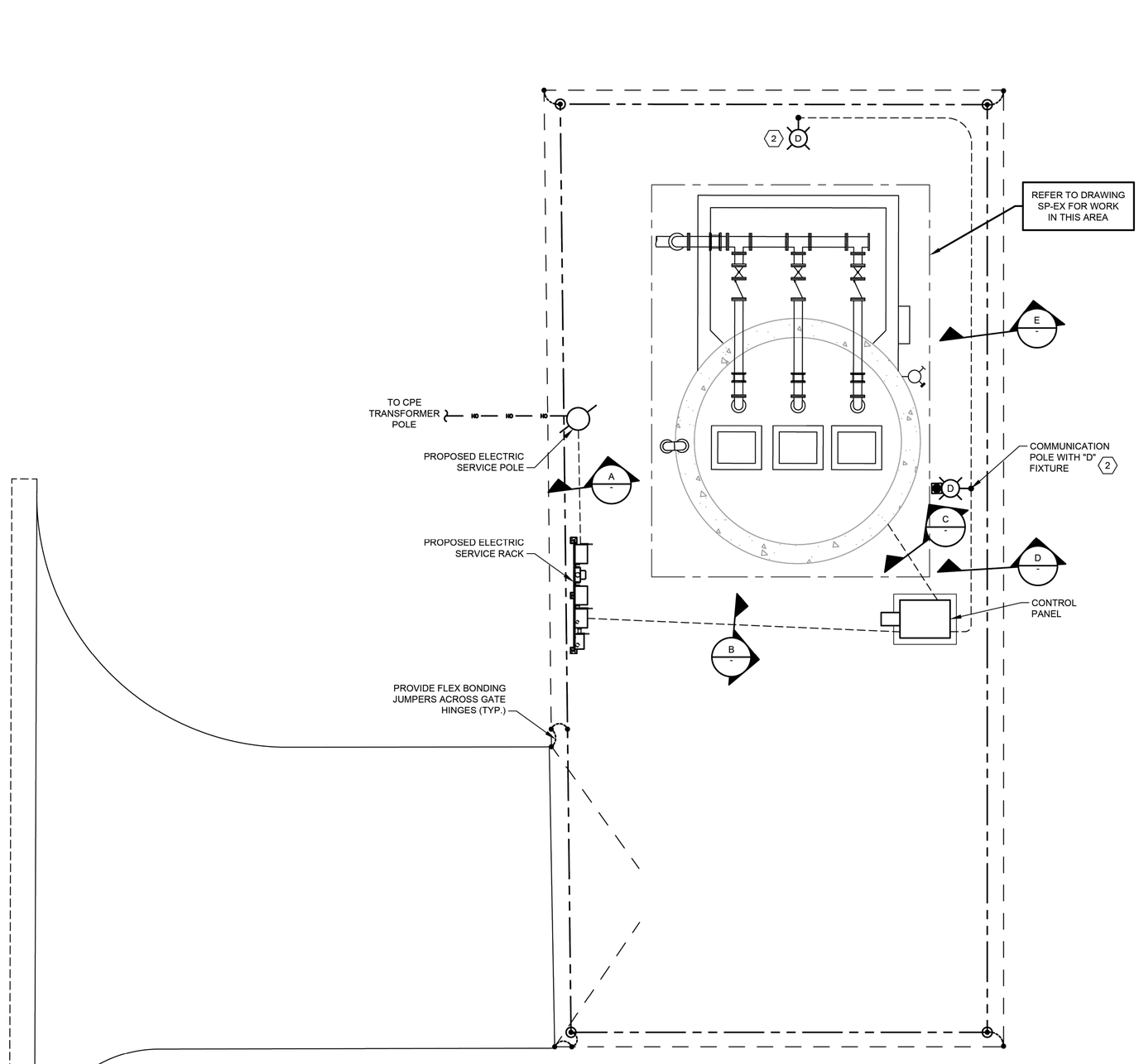

SOUTHPOINT ELECTRICAL
EXISTING SITE

PLAN

1"= 5'-0"

NOTES:

1. THE ELECTRICAL INSTALLATION IN THE WET WELL SHALL BE EXPLOSION PROOF, IN ACCORDANCE WITH THE NATIONAL ELECTRICAL CODE FOR CLASS I, DIVISION 1 LOCATIONS.
2. YARD LIGHT CONTROLLED BY LIGHTING SWITCH.
3. TYPE "B" FIXTURE TO BE INSTALLED ON THE POLE PROVIDING WIRES FOR THE "B" LIGHT.
4. INSIDE WETWELL RATED NEMA CLASS , DIV. 1, OUTSIDE ABOVE GROUND, AROUND WETWELL RATED CLASS 1, DIV. 2 ACCORDING TO NFPA 820.
5. GROUNDING LOOP SHALL BE BURIED 30" BELOW FINISHED GRADE.
6. #2/0 BARE COPPER GROUND TO BE BONDED TO HANDRAIL.

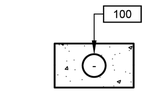

DUCTBANK
SECTION A
NTS

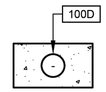

DUCTBANK
SECTION B
NTS

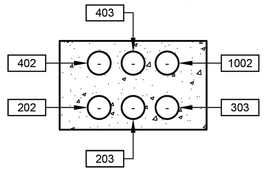

DUCTBANK
SECTION C
NTS

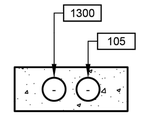

DUCTBANK
SECTION D
NTS

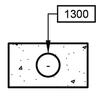

DUCTBANK
SECTION E
NTS

FOR INTERIM REVIEW
ONLY NOT INTENDED FOR
PERMIT, BIDDING OR
CONSTRUCTION PURPOSES.
ENGINEER:
HOSS FOROUZAN
P.E. SERIAL NO.77748
12/15/2025

GAI
Gupta & Associates, Inc.
CONSULTING ENGINEERING
Registration No. F-2593
302 Dennis St.,
Houston, Texas 77006
Tel: 713-636-2936
Fax: 713-636-2987
email: hforouzan@gaiconsulting.com

IDS Engineering Group
13430 NW. Freeway
Suite 700
Houston, Tx. 77040
713.462.3178
TxEng Firm 2726
TxSurv Firm 10110700

CITY OF HOUSTON
HOUSTON PUBLIC WORKS

LIFT STATION RENEWAL
AND REPLACEMENT FY 2023

SOUTHPOINT LIFT STATION
PROPOSED SITE PLAN

WBS NUMBER	FOR CITY OF HOUSTON USE ONLY
R-000267-0179-4	
DRAWING SCALE	
HORIZ: VERT:	
CITY OF HOUSTON PM	
NAWARAJ PANTA, P.E.	
SHEET NO. 79 OF 321	

DWG. NO. SPT-E-2

NO.	DATE	REVISION	APP.

FILE PATH: O:\H8108_Lift Station Rehabilitation And Reconstruction (IDS)\6 Drawings\Electrical\Working\South Point\H8108_SPT-E-02.dwg

IDS JOB No. 0057-085-00

PLOTTED: 12/11/2025 8:39 PM

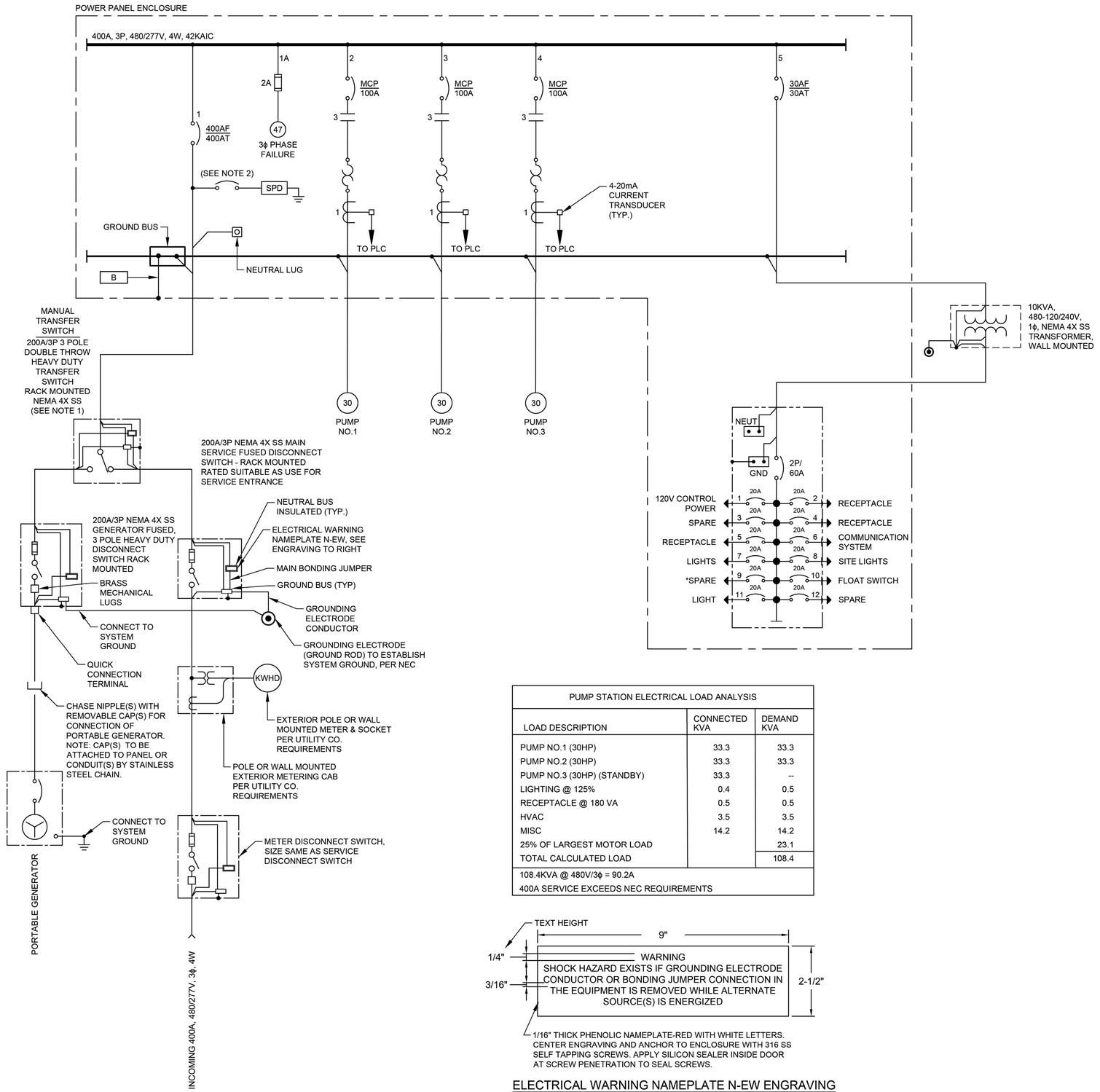

NOTES:

1. PROVIDE 5A PRIMARY TO 4-20mA CURRENT TRANSDUCER.
2. PROVIDE BREAKER ACCORDING TO MANUFACTURER'S REQUIREMENTS.
3. POINT TO POINT METHOD IS USED FOR SHORT CIRCUIT CURRENT CALCULATION.
4. CONTRACTOR SHALL PROVIDE A PERMANENTLY AFFIXED LABEL (2" X 3") SHOWING THE AVAILABLE FAULT CURRENT AND CALCULATION DATE. THE LABEL SHALL BE BLUE LETTERING ON A CONTRASTING BACKGROUND.
5. THE INSULATION TYPES OF ALL ELECTRICAL CONDUCTORS USED IN THE PROJECT HAVE BEEN SPECIFIED IN ELECTRICAL SPECIFICATIONS (16120, 16121, AND 16122). THE TYPES OF CONDUITS USED IN THE PROJECT HAS BEEN SPECIFIED IN ELECTRICAL SPECIFICATIONS 16111.

GENERAL NOTES:

1. NO ELECTRICAL MATERIAL, APPARATUS, DEVICES, APPLIANCES, FIXTURES, OR EQUIPMENT SHALL BE SOLD OR INSTALLED IN THE CITY UNLESS THEY ARE IN CONFORMANCE WITH THE PROVISIONS OF SECTION 508 CITY OF HOUSTON ELECTRICAL CODE, THE LAWS OF THE STATE OF TEXAS AND ANY APPLICABLE RULES AND REGULATIONS ISSUED UNDER THE AUTHORITY OF THE STATE STATUES. THE MAKER'S NAME, TRADEMARK, OR OTHER IDENTIFICATION SYMBOL SHALL BE PLACED ON ALL ELECTRICAL MATERIALS, APPARATUS, DEVICES, APPLIANCES, FIXTURES, AND EQUIPMENT USED OR INSTALLED UNDER THE PROVISIONS OF THIS CODE. ALL ELECTRICAL MATERIALS AND EQUIPMENT SHALL BE LISTED AND LABELED FOR THE INTENDED USE AND SHALL BE INCLUDED IN A LIST PUBLISHED BY AN APPROVAL AGENCY.

NO.	DATE	REVISION	APP.

PUMP STATION ELECTRICAL LOAD ANALYSIS		
LOAD DESCRIPTION	CONNECTED KVA	DEMAND KVA
PUMP NO.1 (30HP)	33.3	33.3
PUMP NO.2 (30HP)	33.3	33.3
PUMP NO.3 (30HP) (STANDBY)	33.3	--
LIGHTING @ 125%	0.4	0.5
RECEPTACLE @ 180 VA	0.5	0.5
HVAC	3.5	3.5
MISC	14.2	14.2
25% OF LARGEST MOTOR LOAD		23.1
TOTAL CALCULATED LOAD		108.4
108.4KVA @ 480V/3ϕ = 90.2A 400A SERVICE EXCEEDS NEC REQUIREMENTS		

ELECTRICAL WARNING NAMEPLATE N-EW ENGRAVING

FOR INTERIM REVIEW ONLY NOT INTENDED FOR PERMIT, BIDDING OR CONSTRUCTION PURPOSES.
ENGINEER:
HOSS FOROUZAN
P.E. SERIAL NO.77748
12/15/2025

GAI
Gupta & Associates, Inc.
CONSULTING ENGINEERING
Registration No. F-2593
302 Dennis St.,
Houston, Texas 77006
Tel: 713-636-2936
Fax: 713-636-2987
email: hforouzan@gaiconsulting.com

IDS Engineering Group
13430 NW. Freeway
Suite 700
Houston, Tx. 77040
713.462.3178
TxEng Firm 2726
TxSurv Firm 10110700

CITY OF HOUSTON
HOUSTON PUBLIC WORKS

LIFT STATION RENEWAL AND REPLACEMENT FY 2023

SOUTHPOINT LIFT STATION SINGLE LINE DIAGRAM

WBS NUMBER	FOR CITY OF HOUSTON USE ONLY
R-000267-0179-4	
DRAWING SCALE	
HORIZ: VERT:	
CITY OF HOUSTON PM	
NAWARAJ PANTA, P.E.	

DWG. NO.	SHEET NO.
SPT–E–3	SHEET NO. 80 OF 321

IDS JOB No. 0057-085-00

FILE PATH: O:\H8108_Lift Station Rehabilitation And Reconstruction (IDS)\6 Drawings\Electrical\Working\South Point\H8108_SPT-E-03.dwg

PLOTTED: 12/11/2025 8:39 PM

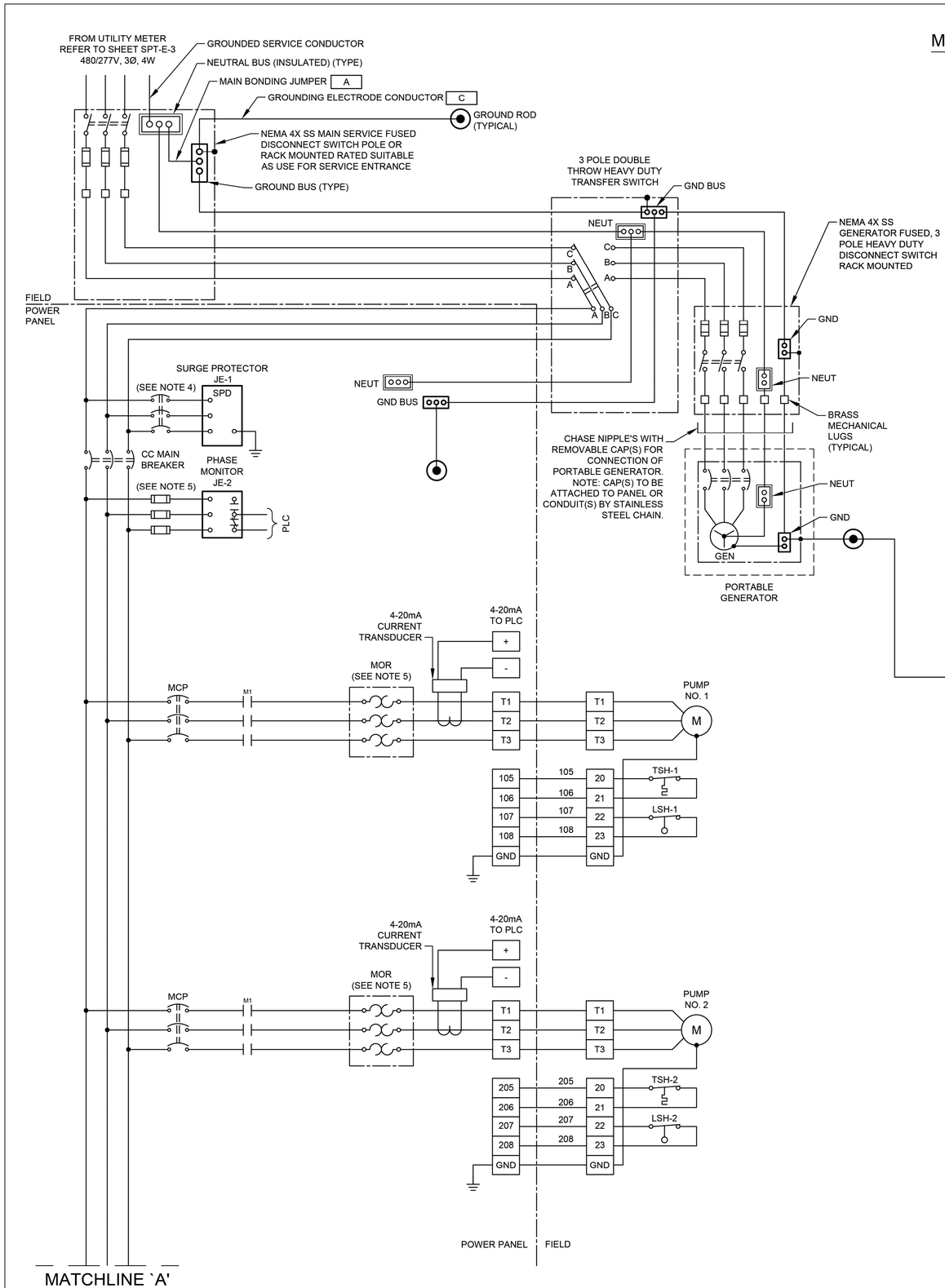

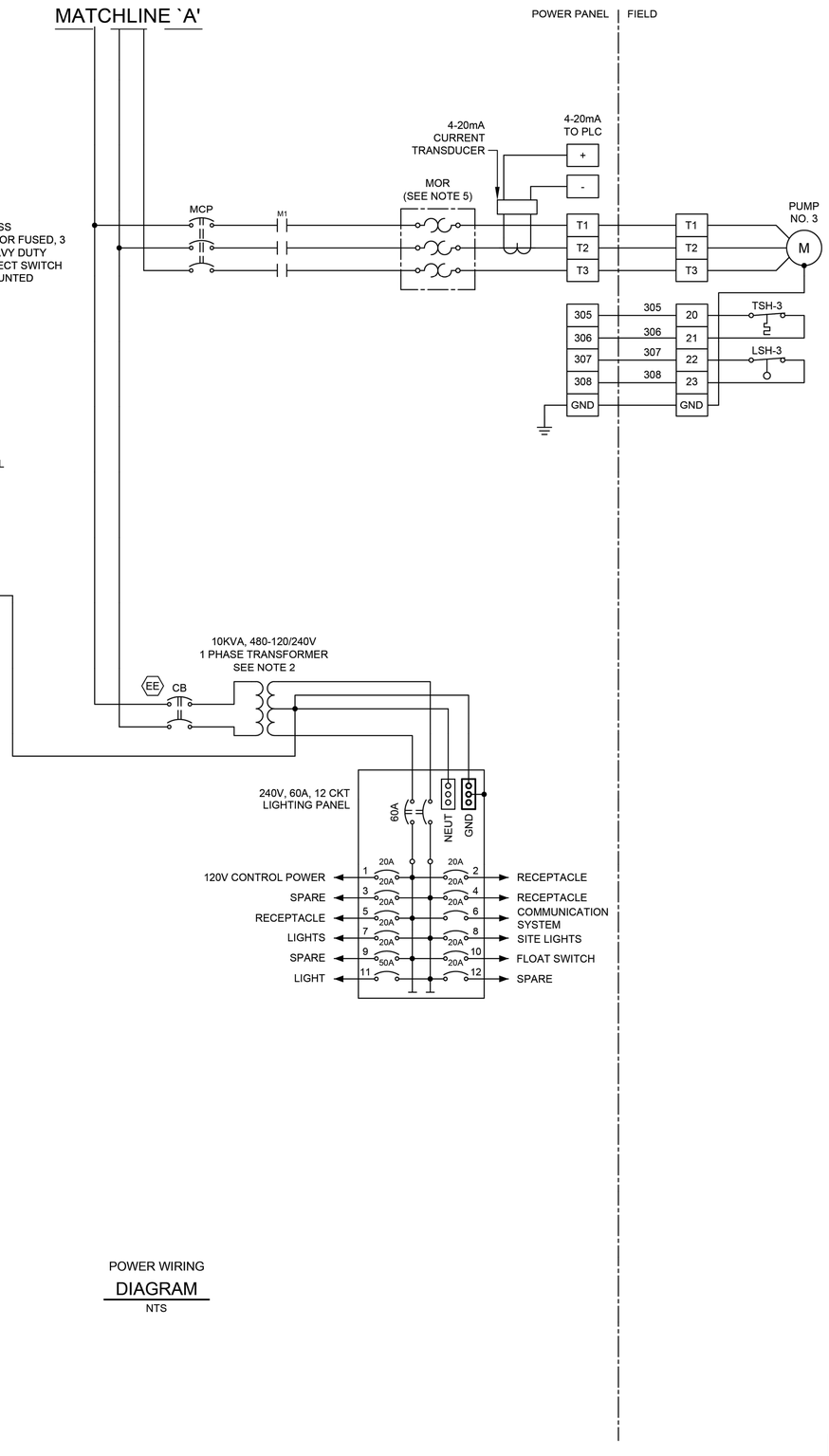

POWER WIRING DIAGRAM
NTS

NOTES:

1. UNLESS OTHERWISE INDICATE, ALL DEVICES WITHOUT FURTHER DESIGNATION ARE LOCATED AT THE CONTROL PANEL.
2. CONTRACTOR TO COORDINATE POWER FACTOR CORRECTION CAPACITOR SIZE WITH PUMP MANUFACTURER.
3. CONTRACTOR SHALL TERMINATE POWER & CONTROL WIRES PER MANUFACTURER'S REQUIREMENTS.
4. PROVIDE BREAKER SIZE ACCORDING TO MANUFACTURER'S REQUIREMENTS.
5. PROVIDE FUSE SIZE ACCORDING TO MANUFACTURER'S REQUIREMENTS.
6. THE COMBINATION OF CT AND MOTOR OVERLOAD RELAY IF REQUIRED.

NO.	DATE	REVISION	APP.

FOR INTERIM REVIEW
ONLY NOT INTENDED FOR
PERMIT, BIDDING OR
CONSTRUCTION PURPOSES.
ENGINEER:
HOSS FOROUZAN
P.E. SERIAL NO.77748
12/15/2025

GAI
Gupta & Associates, Inc.
CONSULTING ENGINEERING
Registration No. F-2593
302 Dennis St.,
Houston, Texas 77006
Tel: 713-636-2936
Fax: 713-636-2987
email: hforouzan@gaiconsulting.com

IDS Engineering Group
13430 NW. Freeway
Suite 700
Houston, Tx. 77040
713.462.3178
TxEng Firm 2726
TxSurv Firm 10110700

CITY OF HOUSTON
HOUSTON PUBLIC WORKS

LIFT STATION RENEWAL AND REPLACEMENT FY 2023

SOUTHPOINT LIFT STATION THREE-LINE DIAGRAM

WBS NUMBER	FOR CITY OF HOUSTON USE ONLY
R-000267-0179-4	
DRAWING SCALE	
HORIZ: VERT:	
CITY OF HOUSTON PM	
NAWARAJ PANTA, P.E.	
DWG. NO. SPT-E-4	SHEET NO. 81 OF 321

IDS JOB No. 0057-085-00

FILE PATH: O:\H8108_Lift Station Rehabilitation And Reconstruction (IDS)\6 Drawings\Electrical\Working\South Point\H8108_SPT-E-04.dwg

PLOTTED: 12/11/2025 8:40 PM

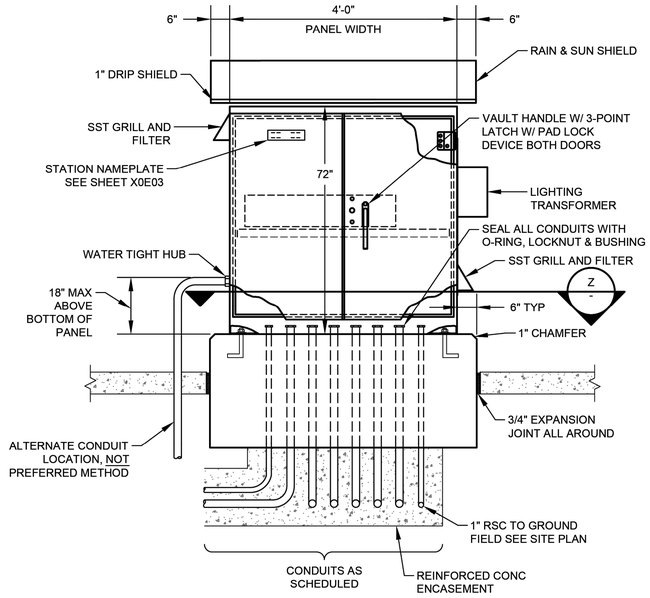

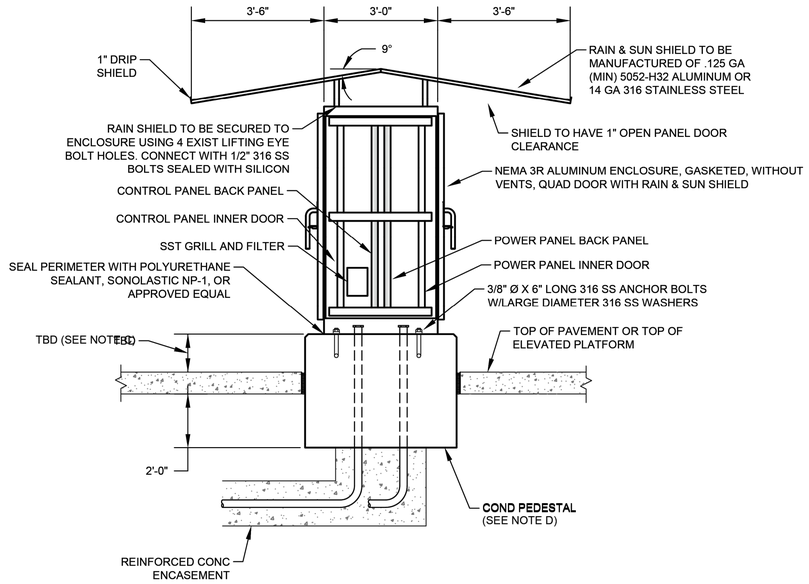

CONTROL CABINET ENCLOSURE WITH CONCRETE PEDESTAL FOUNDATION

(SEE NOTE 6)

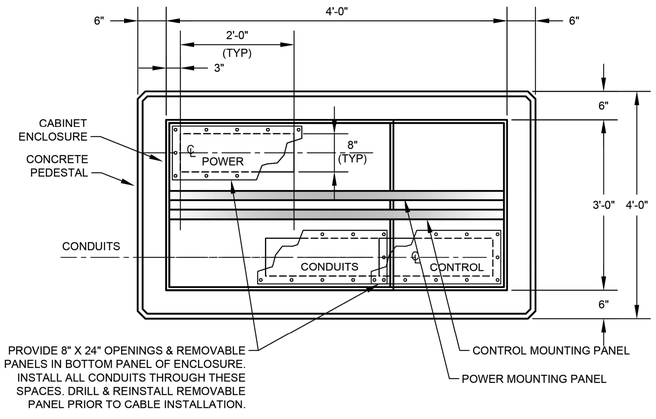

SECTION Z / - NTS

NOTES:

1. SEE SHEET SPT-I-4 FOR EQUIPMENT SCHEDULE.
2. REFER TO SPEC 13325-8 FOR PANEL DIMENSIONS.
3. EXPANSION JOINT FITTINGS AS REQUIRED.
4. REFER TO SERVICE RACK FOR DETAIL.
5. REFER TO STRUCTURAL DRAWINGS .

NO.	DATE	REVISION	APP.

FOR INTERIM REVIEW
ONLY NOT INTENDED FOR
PERMIT, BIDDING OR
CONSTRUCTION PURPOSES.
ENGINEER:
HOSS FOROUZAN
P.E. SERIAL NO.77748
12/15/2025

GAI
Gupta & Associates, Inc.
CONSULTING ENGINEERING
Registration No. F-2593
302 Dennis St.,
Houston, Texas 77006
Tel: 713-636-2936
Fax: 713-636-2987
email: hforouzan@gaiconsulting.com

IDS Engineering Group
13430 NW. Freeway
Suite 700
Houston, Tx. 77040
713.462.3178
TxEng Firm 2726
TxSurv Firm 10110700

CITY OF HOUSTON

HOUSTON PUBLIC WORKS

LIFT STATION RENEWAL
AND REPLACEMENT FY 2023

SOUTHPOINT LIFT STATION CONTROL CABINET DETAIL

WBS NUMBER	FOR CITY OF HOUSTON USE ONLY
R-000267-0179-4	
DRAWING SCALE	
HORIZ: VERT:	
CITY OF HOUSTON PM	
NAWARAJ PANTA, P.E.	
DWG. NO. SPT-E-5	SHEET NO. 82 OF 321

IDS JOB No. 0057-085-00

FILE PATH: O:\H8108_Lift Station Rehabilitation And Reconstruction (IDS)\6 Drawings\Electrical\Working\South Point\H8108_SPT-E-05.dwg

PLOTTED: 12/11/2025 8:40 PM

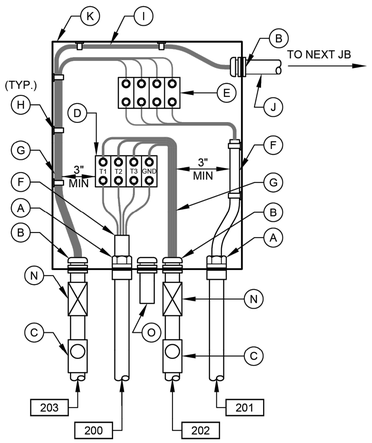

PUMP NO.1
JUNCTION BOX

DETAIL 3
NTS
(SEE NOTE 7)

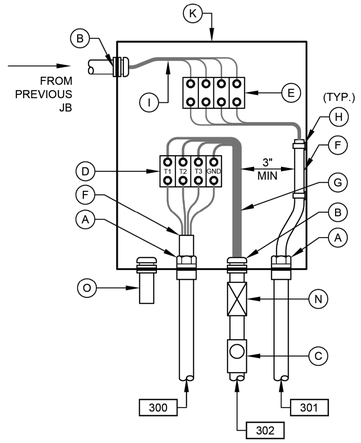

PUMP NO.2
JUNCTION BOX

DETAIL 4
NTS
(SEE NOTE 7)

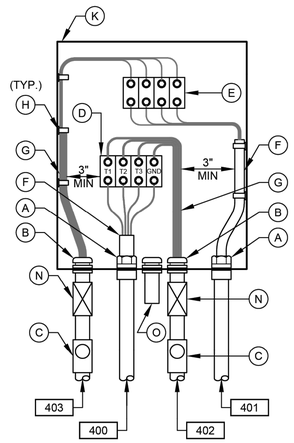

PUMP NO.3
JUNCTION BOX

DETAIL 5
NTS
(SEE NOTE 7)

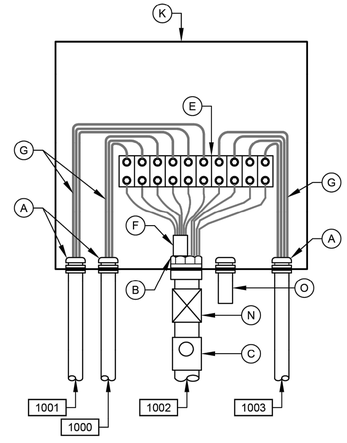

LEVEL TRANSMITTER
JUNCTION BOX

DETAIL 6
NTS
(SEE NOTE 7)

NOTES:

1. NAMEPLATES SHALL BE MOUNTED TO JUNCTION BOXES USING 316 STAINLESS STEEL HARDWARE.
2. MAINTAIN MINIMUM SEPARATION REQUIRED UNDER NEC ARTICLE 504, BETWEEN INTRINSICALLY SAFE CONTROL WIRING AND NON INTRINSICALLY SAFE MOTOR FEEDER WIRING.
3. UNLESS OTHERWISE NOTED, ALL EXTERIOR EXPOSED CONDUITS SHALL BE PVC COATED ALUMINUM.
4. UNLESS OTHERWISE NOTED, ALL NUTS, BOLTS, SCREWS WASHERS, ETC SHALL BE TYPE 316 STAINLESS STEEL.
5. ALL UNDERGROUND CONDUITS TO BE ENCASED IN REINFORCED CONCRETE DUCTBANK.
6. PROVIDE ANTI-CORROSIVE SPRAY ON ANY BARE METAL PARTS OR EXPOSED WIRE.
7. SEE WIRING SCHEMATICS FOR TERMINALS AND WIRE NUMBERS.
8. ANY CONDUIT REQUIRING A CSBE SEAL, SHALL BE A MINIMUM SIZE OF 2 1/2" PER CABLE.
9. DETAIL SHOWN MAY BE MODIFIED PER SITE SITUATION.
10. COORDINATE WITH WASTE WATER OPERATIONS ELECTRICAL ORGANIZATION FOR THE OPENING OF JUNCTION BOXES TO THE SIDE OF WET WELL IF REQUIRED DURING CONSTRUCTION.
11. THE ENCLOSURES WITH ELECTRICAL CIRCUITS SHALL BE A MINIMUM OF 5 FEET FROM ANY CLASSIFIED AREA, OTHERWISE EXPLOSION PROOF TYPE ENCLOSURES SHALL BE USED.

NO.	DATE	REVISION	APP.

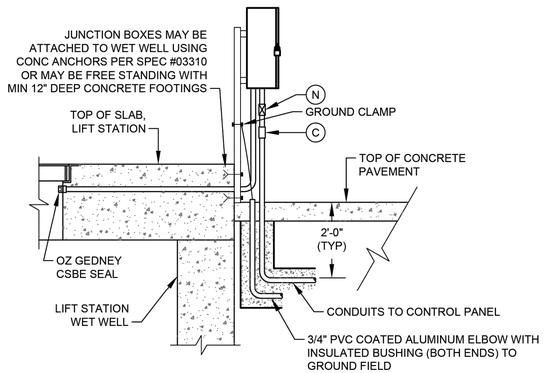

TYP SIDE VIEW FOR DETAIL 1, 1A, & 2

(SEE NOTE 10)

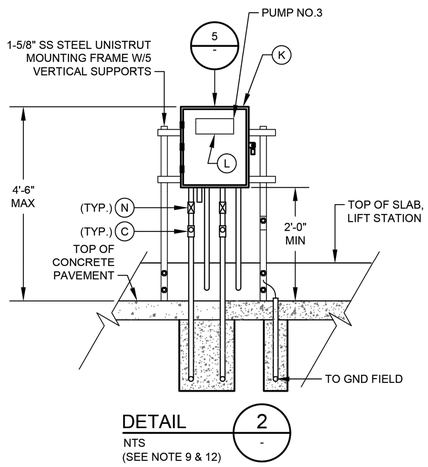

DETAIL 2
NTS
(SEE NOTE 9 & 12)

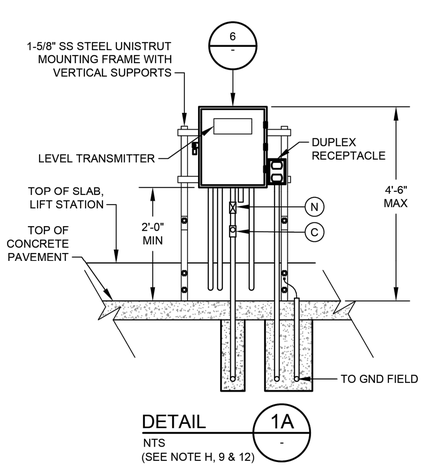

DETAIL 1A
NTS
(SEE NOTE H, 9 & 12)

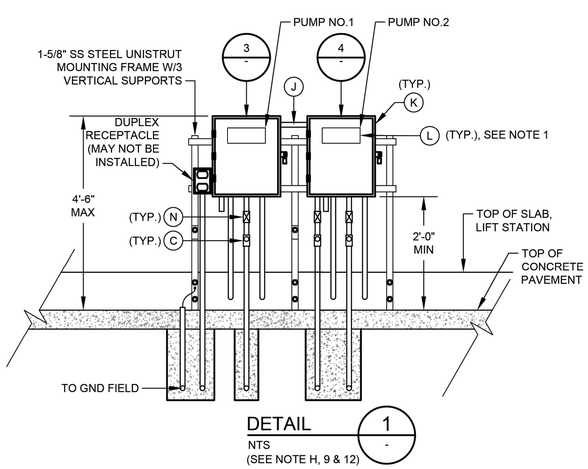

DETAIL 1
NTS
(SEE NOTE H, 9 & 12)

JUNCTION BOX EQUIPMENT SCHEDULE

- A - OZ GEDNEY CSBE SEAL
- B - WATERTIGHT CONDUIT HUB WITH INSULATED BUSHING
- C - CLASS I, DIV 1, EXPLOSION PROOF SEAL INSTALLED PER NEC DIV 501
- D - POWER TERMINAL BLOCK W/SCREW DOWN BOX LUGS
- E - CONTROL TERM BLOCK W/SCREW DOWN BOX LUGS
- F - MULTI-CONDUCTOR CABLE, REMOVE OUTER JACKET AS SHOWN
- G - WIRING AS SCHEDULED
- H - WIRING HARNESS PERMANENTLY AFFIXED
- I - PUMP CONTROL WIRING FROM PUMP 1 & 2
- J - 1-1/2" PVC COATED CONDUIT NIPPLE
- K - NEMA 4X STAINLESS STEEL JUNCTION BOX WITH GASKETED FRONT COVER, SINGLE QUARTER TURN, OIL-TIGHT LATCH AND PADLOCKING PROVISIONS, MINIMUM SIZE: 12"W X 16"H X 6"D
- L - NAMEPLATE, SEE SPECIFICATIONES (SEE NAMEPLATE SCHEDULE)
- M - NOT USED.
- N - EXPANSION FITTING
- O - DRAIN VENT

FOR INTERIM REVIEW ONLY NOT INTENDED FOR PERMIT, BIDDING OR CONSTRUCTION PURPOSES.
ENGINEER:
HOSS FOROUZAN
P.E. SERIAL NO.77748
12/15/2025

GAI
Gupta & Associates, Inc.
CONSULTING ENGINEERING
Registration No. F-2593
302 Dennis St.,
Houston, Texas 77006
Tel: 713-636-2936
Fax: 713-636-2987
email: hforouzan@gaiconsulting.com

IDS Engineering Group
13430 NW. Freeway
Suite 700
Houston, Tx. 77040
713.462.3178
TxEng Firm 2726
TxSurv Firm 10110700

CITY OF HOUSTON
HOUSTON PUBLIC WORKS

LIFT STATION RENEWAL AND REPLACEMENT FY 2023

SOUTHPOINT LIFT STATION JUNCTION BOX DETAILS

WBS NUMBER	FOR CITY OF HOUSTON USE ONLY
R-000267-0179-4	
DRAWING SCALE	
HORIZ: VERT:	
CITY OF HOUSTON PM	
NAWARAJ PANTA, P.E.	
DWG. NO. SPT–E–6	SHEET NO. 83 OF 321

IDS JOB No. 0057-085-00

FILE PATH: O:\H8108_Lift Station Rehabilitation And Reconstruction (IDS)\6 Drawings\Electrical\Working\South Point\H8108_SPT–E–06.dwg

PLOTTED: 12/11/2025 8:40 PM

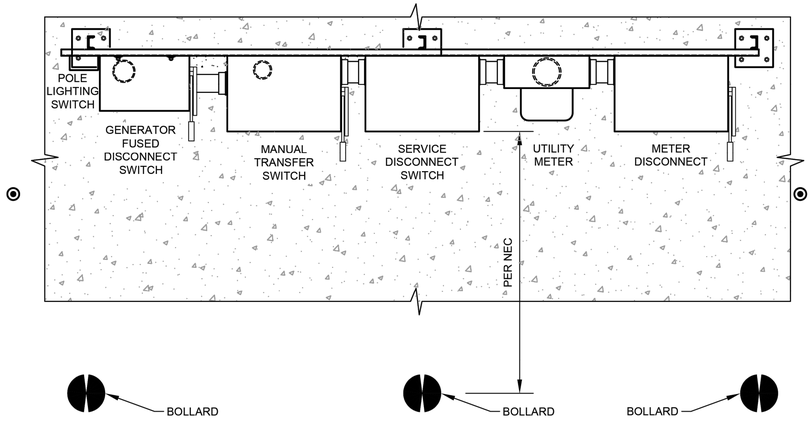

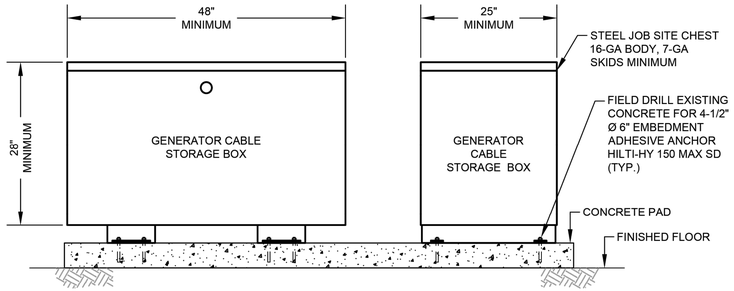

GENERATOR CABLE STORAGE BOX SIDE VIEW

DETAIL 20
NTS.

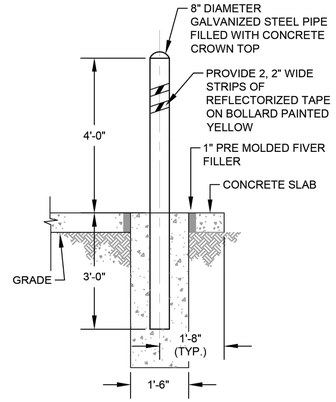

BOLLARD DETAIL

DETAIL 21
NTS.

ALLOWABLE DEVICE AMPACITY CHART DLO RHW-2 CAM-LOK CONNECTOR CABLE		
CABLE SIZE AWG	AMPS	CABLE LENGTH
#1	220	65 FEET
4/0	400	65 FEET

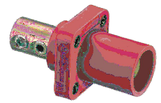

QUICK CONNECT FOR GENRATOR

PHOTOGRAPH 1
NTS.



QUICK CONNECT FOR GENRATOR

PHOTOGRAPH 2
NTS.

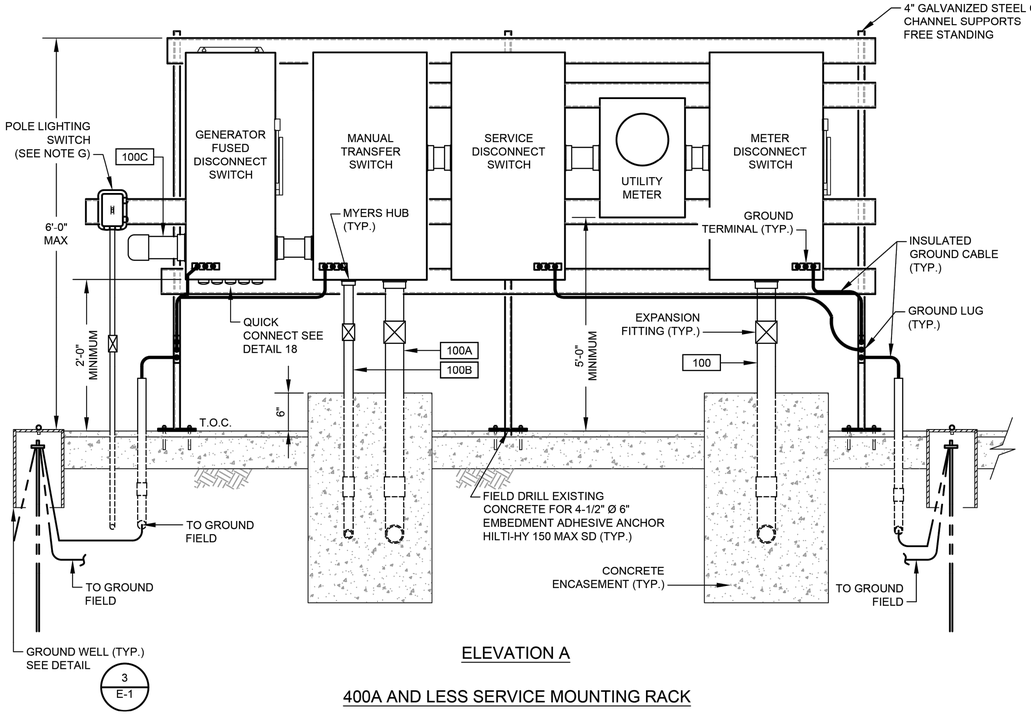

ELEVATION A

400A AND LESS SERVICE MOUNTING RACK

DETAIL 17
NTS.

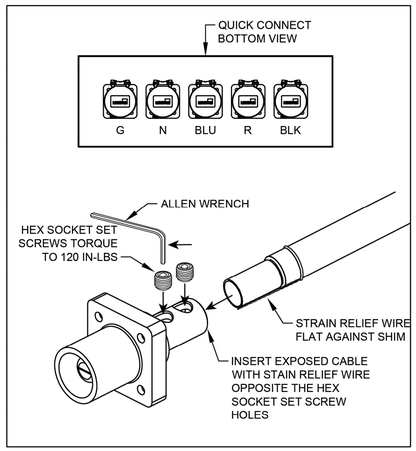

400A AND LESS FEMALE PLUG CABLE TERMINATION

DETAIL 18
NTS.

REFER TO PHOTO NO.1

NOTES:

1. CONTRACTOR TO INSTALL CONNECTORS AT BOTH ENDS OF CABLE.

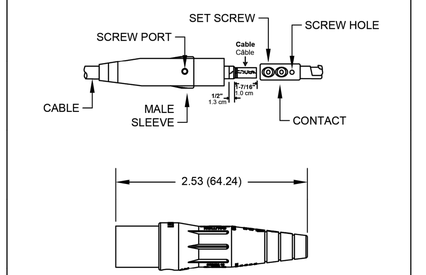

400A AND LESS MALE PLUG CABLE TERMINATION

DETAIL 19
NTS.

REFER TO PHOTO NO.2

NOTES:

1. CHASE NIPPLE(S) WITH REMOVABLE CAP(S) FOR CONNECTION OF PORTABLE GENERATOR. NOTE: CAP(S) TO BE ATTACHED TO PANEL OR CONDUIT(S) BY STAINLESS STEEL CHAIN.
2. T.O.C DEFINED AS TOP OF PAVEMENT OR TOP OF PANEL ENCLOSURE PEDESTAL WHICHEVER IS HIGHER. (SEE NOTE B).
3. PROVIDE CENTER BOLLARD WHEN SPACE BETWEEN OUTSIDE BOLLARDS IS GREATER THEN 4'-0".

NO.	DATE	REVISION	APP.

FOR INTERIM REVIEW
ONLY NOT INTENDED FOR
PERMIT, BIDDING OR
CONSTRUCTION PURPOSES.
ENGINEER:
HOSS FOROUZAN
P.E. SERIAL NO.77748
12/15/2025

GAI
Gupta & Associates, Inc.
CONSULTING ENGINEERING
Registration No. F-2593
302 Dennis St., Houston, Texas 77006
Tel: 713-636-2936
Fax: 713-636-2987
email: hforouzan@gaiconsulting.com

IDS Engineering Group
13430 NW. Freeway
Suite 700
Houston, Tx. 77040
713.462.3178
TxEng Firm 2726
TxSurv Firm 10110700

CITY OF HOUSTON
HOUSTON PUBLIC WORKS

LIFT STATION RENEWAL AND REPLACEMENT FY 2023

SOUTHPOINT LIFT STATION SERVICE RACK DETAIL

WBS NUMBER	FOR CITY OF HOUSTON USE ONLY
R-000267-0179-4	
DRAWING SCALE	
HORIZ: VERT:	
CITY OF HOUSTON PM	
NAWARAJ PANTA, P.E.	
SHEET NO. 84 OF 321	

DWG. NO. SPT-E-7

IDS JOB No. 0057-085-00

FILE PATH: O:\H8108_Lift Station Rehabilitation And Reconstruction (IDS)\6 Drawings\Electrical\Working\South Point\H8108_SPT-E-07.dwg

PLOTTED: 12/11/2025 8:40 PM

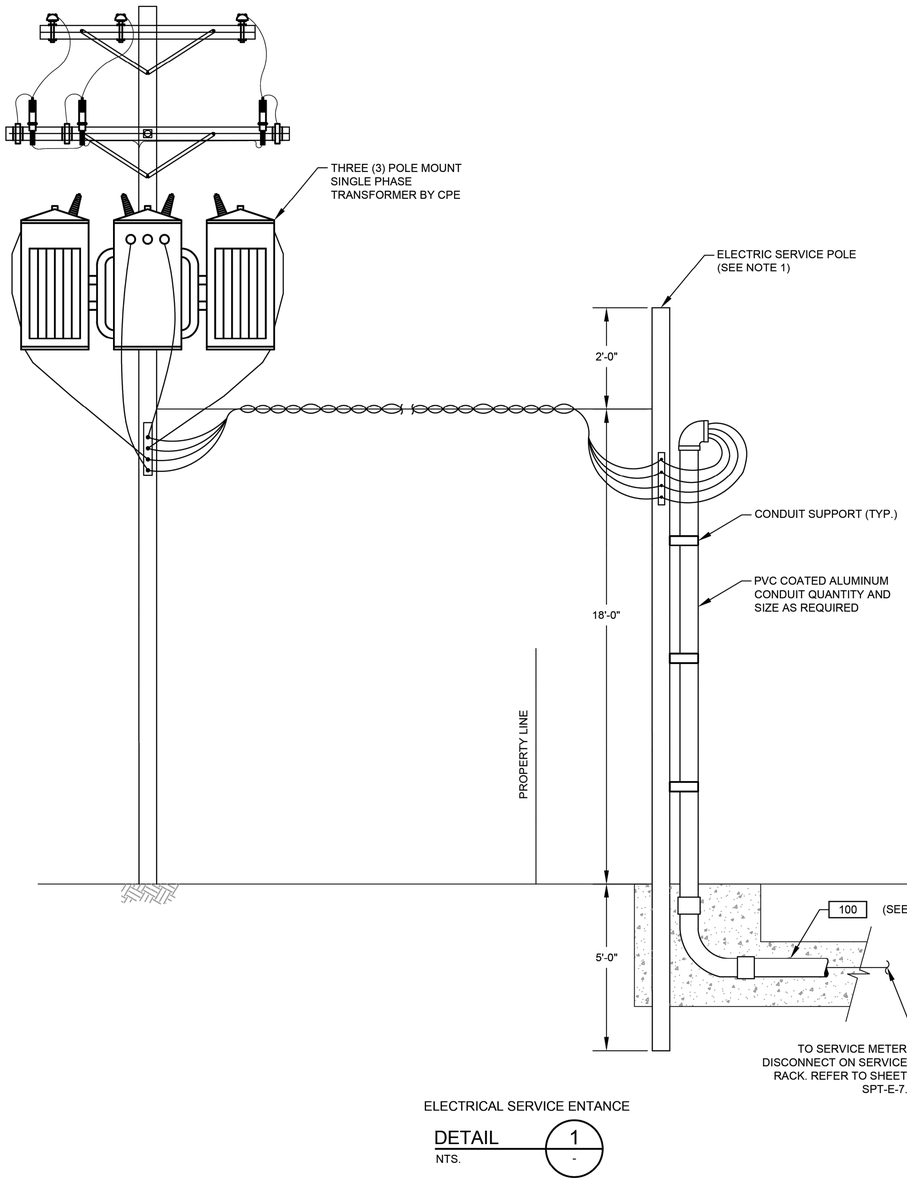

ELECTRICAL SERVICE ENTANCE

DETAIL 1
NTS. -

NO.	DATE	REVISION	APP.

FOR INTERIM REVIEW
ONLY NOT INTENDED FOR
PERMIT, BIDDING OR
CONSTRUCTION PURPOSES.
ENGINEER:
HOSS FOROUZAN
P.E. SERIAL NO.77748
12/15/2025

GAI
Gupta & Associates, Inc.
CONSULTING ENGINEERING
Registration No. F-2593
302 Dennis St.,
Houston, Texas 77006
Tel: 713-636-2936
Fax: 713-636-2987
email: hforouzan@gaiconsulting.com

IDS Engineering Group
13430 NW. Freeway
Suite 700
Houston, Tx. 77040
713.462.3178
TxEng Firm 2726
TxSurv Firm 10110700

CITY OF HOUSTON
HOUSTON PUBLIC WORKS

LIFT STATION RENEWAL
AND REPLACEMENT FY 2023

SOUTHPOINT LIFT STATION
CONDUIT SCHEDULE

WBS NUMBER	FOR CITY OF HOUSTON USE ONLY
R-000267-0179-4	
DRAWING SCALE	
HORIZ: VERT:	
CITY OF HOUSTON PM	
NAWARAJ PANTA, P.E.	
SHEET NO. 85 OF 321	

DWG. NO.
SPT-E-8

IDS JOB No. 0057-085-00

FILE PATH: O:\H8108_Lift Station Rehabilitation And Reconstruction (IDS)\6 Drawings\Electrical\Working\South Point\H8108_SPT-E-08.dwg

	DESCRIPTION	SERVICE		ROUTING			CONDUIT & WIRE SIZE
		VOLTAGE	AMPS OR HP	FROM	TO	VIA	
A	MAIN BONDING JUMPER	--	--	MAIN FUSED DISCONNECT NEUTRAL	MAIN FUSED DISCONNECT GROUND	--	#6 CU GND.
B	EQUIPMENT BONDING JUMPER	--	--	MCC/POWER PANEL ENCLOSURE	POWER/CONTROL PANEL & EQUIPMENT	--	#6 CU GND.
C	GROUNDED ELECTRODE CONDUCTOR	--	--	GROUNDING ELECTRODE	MAIN SERVICE FUSED DISCONNECT GROUNDING	--	#6 CU GND.
100	SERVICE ENTRANCE	480V	200A	UTILITY POWER SERVICE	METER DISCONNECT		3#3/0 AWG., #6 NEUT. #6 GND., 2-1/2" C.
100A	SERVICE POWER	480V	200A	SERVICE DISCONNECT	MTS	--	3#3/0 AWG., #6 NEUT. #6 GND., 2-1/2" C.
100B	NORMAL/EMERGENCY POWER	24VDC	--	MTS	CONTROL PANEL	--	4 #14 AWG., 1"C.
100C	EMERGENCY POWER	480V	200A	GENERATOR DISCONNECT	POTABLE GENERATOR	--	--
101	GROUND ELECTRODE CONDUCTOR	--	--	POWER PANEL	GROUND FIELD	CAPPED CONDUITS	#6 CU GND.
104	GROUND ELECTRODE CONDUCTOR	--	--	CONTROL PANEL	GROUND FIELD	--	#6 CU GND.
105	COMMUNICATION	--	--	COMMUNICATION POLE	CONTROL PANEL	--	1-1/2"C. CAT-5E
200	PUMP NO. 1 POWER	480V	30 HP	PUMP NO. 1	PUMP NO. 1 JUNCTION BOX	--	MANUFACTURER CABLE IN 3-1/2"C.
201	PUMP NO. 1 CONTROLS	120V	--	PUMP NO. 1	PUMP NO. 1 JUNCTION BOX	--	MANUFACTURER CABLE IN 3-1/2"C.
202	PUMP NO. 1 POWER	480V	30 HP	PUMP NO. 1 JUNCTION BOX	PUMP STARTER	--	3#6 AWG., #8 GND., 1-1/2"C.
203	COMBINED PUMP CONTROLS	120V	--	PUMP NO. 1 JUNCTION BOX	PUMP STARTER	COMBINE PUMP 1 & 2 CONTROLS	COMBINE 200 & 300 TAG WIRING, 8#14, 1"C.
205	PUMP NO. 1 CONTROLS	120V	--	STARTER IN MOTOR CONTROL CENTER	CONTROL PANEL	--	12#14 AWG., 3/4"C.
300	PUMP NO. 2 POWER	480V	30 HP	PUMP NO. 2	PUMP NO. 2 JUNCTION BOX	--	MANUFACTURER CABLE IN 3-1/2"C.
301	PUMP NO. 2 CONTROLS	120V	--	PUMP NO. 2	PUMP NO. 2 JUNCTION BOX	--	MANUFACTURER CABLE IN 3-1/2"C.
302	PUMP NO. 2 POWER	480V	30 HP	PUMP NO. 2 JUNCTION BOX	PUMP STARTER	--	3#6 AWG., #8 GND., 1-1/2"C.
305	PUMP NO. 2 CONTROLS	120V	--	STARTER IN MOTOR CONTROL CENTER	CONTROL PANEL	--	12#14 AWG., 3/4"C.
400	PUMP NO. 3 POWER	480V	30 HP	PUMP NO. 3	PUMP NO. 3 JUNCTION BOX	--	MANUFACTURER CABLE IN 3-1/2"C.
401	PUMP NO. 3 CONTROLS	120V	--	PUMP NO. 3	PUMP NO. 3 JUNCTION BOX	--	MANUFACTURER CABLE IN 3-1/2"C.
402	PUMP NO. 3 POWER	480V	30 HP	PUMP NO. 3 JUNCTION BOX	PUMP STARTER	--	3#6 AWG., #8 GND., 2"C.
403	COMBINED PUMP CONTROLS	120V	-	PUMP NO. 3 JUNCTION BOX	CONTROL PANEL	--	4#14 AWG., 1"C.
405	PUMP NO. 3 CONTROLS	120V	--	STARTER IN MOTOR CONTROL CENTER	CONTROL PANEL	--	12#14 AWG., 1"C.
600	LIGHTING PANEL FEEDER	480V	40A	MOTOR CONTROL CENTER	LIGHTING TRANSFORMER	--	2#6 AWG., #6 GND., 1"C.
601	LIGHTING PANEL GROUND	--	--	LIGHTING PANEL	GROUND FIELD	--	#8 GND., 1"C.
602	LIGHTING PANEL FEEDER	120/240V	--	LIGHTING TRANSFORMER	LIGHTING PANEL	--	3#4 AWG., #6 GND., 1-1/4" C.
1000	LEVEL TRANSMITTER	24VDC	--	TRANSMITTER JUNCTION BOX	TRANSMITTER JUNCTION BOX	--	MANUFACTURER'S CABLE IN 2-1/2"C
1001	LEVEL TRANSMITTER	24VDC	--	TRANSMITTER JUNCTION BOX	TRANSMITTER JUNCTION BOX	--	MANUFACTURER'S CABLE IN 2-1/2"C
1002	COMBINED LEVEL TRANSMITTERS & FLOAT SWITCH	24VDC	--	CONTROL PANEL	TRANSMITTER JUNCTION BOX	--	2-TRI, 4#14, 2" C.
1003	WELL FLOAT SWITCHES	24VDC	--	TRANSMITTER JUNCTION BOX	FLOAT SWITCH NO.1 & NO.2	--	MANUFACTURER'S CABLE IN 2-1/2"C
1100	120VAC FOR RECEPTACLE	-	--	LIGHTING PANEL	RECEPTACLE NEXT TO TRANSMITTER J-BOX	--	2#12 AWG., #12 GND., 1" C.
1200	120VAC FOR RECEPTACLE	-	--	LIGHTING PANEL	RECEPTACLE NEXT TO PUMP NO.2 J-BOX	--	2#12 AWG., #12 GND., 1" C.
1300	SITE LIGHTING	120VAC	--	LIGHTING PANEL	SITE LIGHTS	--	2#12 AWG., #12 GND., 1" C.

NO.	DATE	REVISION	APP.

FOR INTERIM REVIEW
ONLY NOT INTENDED FOR
PERMIT, BIDDING OR
CONSTRUCTION PURPOSES.
ENGINEER:
HOSS FOROUZAN
P.E. SERIAL NO.77748
12/15/2025

GAI
Gupta & Associates, Inc.
CONSULTING ENGINEERING
Registration No. F-2593
302 Dennis St.,
Houston, Texas 77006
Tel: 713-636-2934
Fax: 713-636-2987
email: hforouzan@gaiconsulting.com

IDS Engineering Group
13430 NW. Freeway
Suite 700
Houston, Tx. 77040
713.462.3178
TxEng Firm 2726
TxSurv Firm 101107000

CITY OF HOUSTON
HOUSTON PUBLIC WORKS

LIFT STATION RENEWAL
AND REPLACEMENT FY 2023

SOUTHPOINT LIFT STATION CONDUIT SCHEDULE

WBS NUMBER	FOR CITY OF HOUSTON USE ONLY
R-000267-0179-4	
DRAWING SCALE	
HORIZ: VERT:	
CITY OF HOUSTON PM	
NAWARAJ PANTA, P.E.	
SHEET NO. 86 OF 321	

DWG. NO.
SPT-E-10

IDS JOB No. 0057-085-00

PLOTTED: 12/11/2025 8:40 PM
FILE PATH: O:\H8108_Lift Station Rehabilitation And Reconstruction (IDS)\6 Drawings\Electrical\Working\South Point\H8108_SPT-E-09.dwg

PLOTTED: 12/11/2025 8:09 PM

HMI

CONTROL PANEL PLC

CONTROL PANEL

INFLUENT PUMP NO. 1									
SEAL FAIL ALARM	MOTOR OVERLOAD ALARM	MOTOR CURRENT	HIGH TEMP ALARM	IN HAND	IN AUTO	ON/OFF	START/ STOP		
MA 1	MO 1	II 1	TH 1	HI 1	IA 1	YFS 1	YCS 1		

INFLUENT PUMP NO. 2									
SEAL FAIL ALARM	MOTOR OVERLOAD ALARM	MOTOR CURRENT	HIGH TEMP ALARM	IN HAND	IN AUTO	ON/OFF	START/ STOP		
MA 2	MO 2	II 2	TH 2	HI 2	IA 2	YFS 2	YCS 2		

INFLUENT PUMP NO. 3									
SEAL FAIL ALARM	MOTOR OVERLOAD ALARM	MOTOR CURRENT	HIGH TEMP ALARM	IN HAND	IN AUTO	ON/OFF	START/ STOP		
MA 3	MO 3	II 3	TH 3	HI 3	IA 3	YFS 3	YCS 3		

	PRIMARY PLC	BACKUP PLC		
ALARMS RESET	FLOAT HIGH-HIGH WETWELL LEVEL	PUMP NO. 1 START/ STOP	PUMP NO. 2 START/ STOP	PUMP NO. 3 START/ STOP
RE 1	LAHH 1A	YCS 1A	YCS 2A	YCS 3A

480V

INFLUENT PUMP NO. 1 — H/O/A, RUN

INFLUENT PUMP NO. 2 — H/O/A, RUN

INFLUENT PUMP NO. 3 — H/O/A, RUN

PRIMARY PLC

BACKUP PLC

INFLUENT PUMP CONTROL PANEL

ALARMS RESET

OIT

TO SHEET SPT-I-2

SPT-I-2

SPT-I-2

WET WELL

LT 1

LE 1

LT 2

LE 2

FS2 HIGH-HIGH LEVEL FLOAT SWITCH

LSH 1A

TSH 1A

M

LSH 2A

TSH 2A

M

FS1 HIGH LEVEL FLOAT SWITCH

LSH 3A

TSH 3A

M

INFLUENT DISCHARGE

FOR INTERIM REVIEW ONLY NOT INTENDED FOR PERMIT, BIDDING OR CONSTRUCTION PURPOSES.
ENGINEER:
HOSS FOROUZAN
P.E. SERIAL NO.77748
12/15/2025

GAI
Gupta & Associates, Inc.
CONSULTING ENGINEERING
Registration No. F-2593
302 Dennis St.,
Houston, Texas 77006
Tel: 713-636-7936
Fax: 713-636-2987
email: hforouzan@gaiconsulting.com

IDS Engineering Group
13430 NW. Freeway
Suite 700
Houston, Tx. 77040
713.462.3178
TxEng Firm 2726
TxSurv Firm 10110700

CITY OF HOUSTON
HOUSTON PUBLIC WORKS

LIFT STATION RENEWAL AND REPLACEMENT FY 2023

SOUTHPOINT LIFT STATION P&ID DIAGRAM–I

WBS NUMBER	FOR CITY OF HOUSTON USE ONLY
R-000267-0179-4	
DRAWING SCALE	
HORIZ: VERT:	
CITY OF HOUSTON PM	
NAWARAJ PANTA, P.E.	
SHEET NO. 87 OF 321	

DWG. NO. SPT–I–1

NO.	DATE	REVISION	APP.

FILE PATH: O:\H8108_Lift Station Rehabilitation And Reconstruction (IDS)\6 Drawings\Instrumentation And Control\Working\South Point\H8108_SPT–I–01.dwg

IDS JOB No. 0057-085-00

PLOTTED: 12/11/2025 8:09 PM

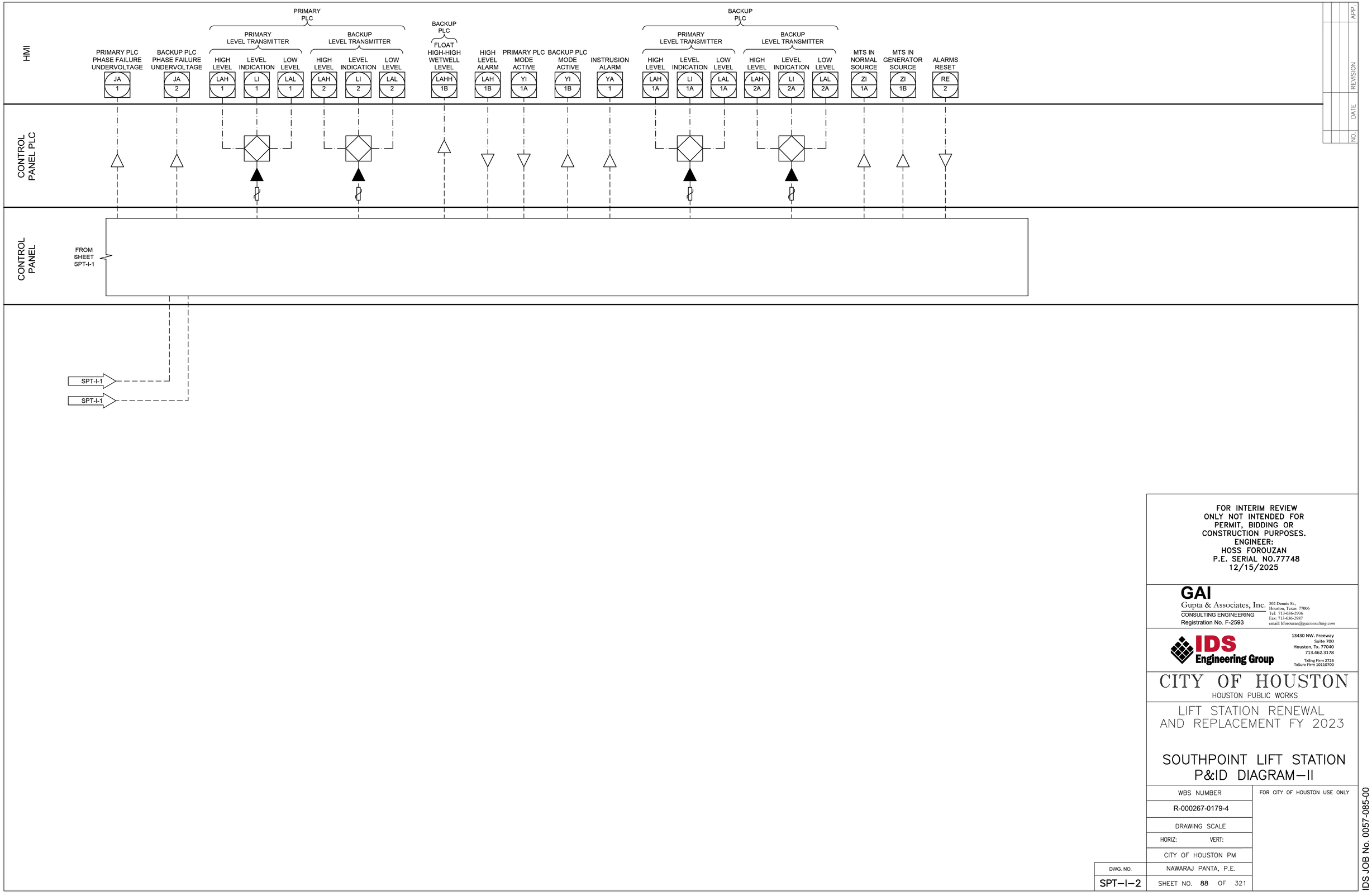

NO.	DATE	REVISION	APP.

FOR INTERIM REVIEW
ONLY NOT INTENDED FOR
PERMIT, BIDDING OR
CONSTRUCTION PURPOSES.
ENGINEER:
HOSS FOROUZAN
P.E. SERIAL NO.77748
12/15/2025

GAI
Gupta & Associates, Inc.
CONSULTING ENGINEERING
Registration No. F-2593
302 Dennis St.,
Houston, Texas 77006
Tel: 713-636-2936
Fax: 713-636-2987
email: hforouzan@gaiconsulting.com

IDS Engineering Group
13430 NW. Freeway
Suite 700
Houston, Tx. 77040
713.462.3178
TxEng Firm 2726
TxSurv Firm 10110700

CITY OF HOUSTON
HOUSTON PUBLIC WORKS

LIFT STATION RENEWAL AND REPLACEMENT FY 2023

SOUTHPOINT LIFT STATION P&ID DIAGRAM–II

WBS NUMBER	FOR CITY OF HOUSTON USE ONLY
R-000267-0179-4	
DRAWING SCALE	
HORIZ: VERT:	
CITY OF HOUSTON PM	
NAWARAJ PANTA, P.E.	
SHEET NO. 88 OF 321	

DWG. NO. SPT–I–2

IDS JOB No. 0057-085-00

FILE PATH: O:\H8108_Lift Station Rehabilitation And Reconstruction (IDS)\6 Drawings\Instrumentation And Control\Working\South Point\H8108_SPT–I–02.dwg

PLOTTED: 12/11/2025 8:09 PM

FILE PATH: O:\H8108_Lift Station Rehabilitation And Reconstruction (IDS)\6 Drawings\Instrumentation And Control\Working\South Point\H8108_SPT-I-03.dwg

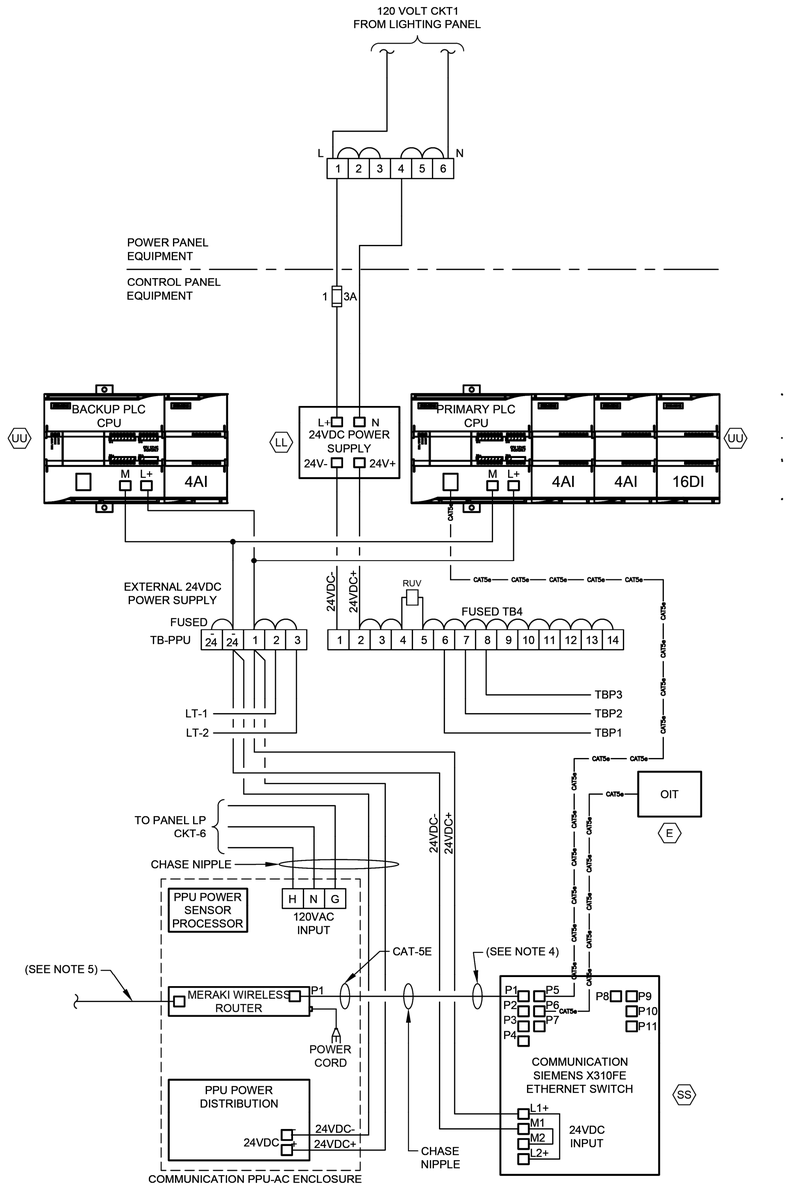

CONTROL POWER & COMMUNICATIONS WIRING

DIAGRAM

NTS

(SEE NOTE 2 & 6)

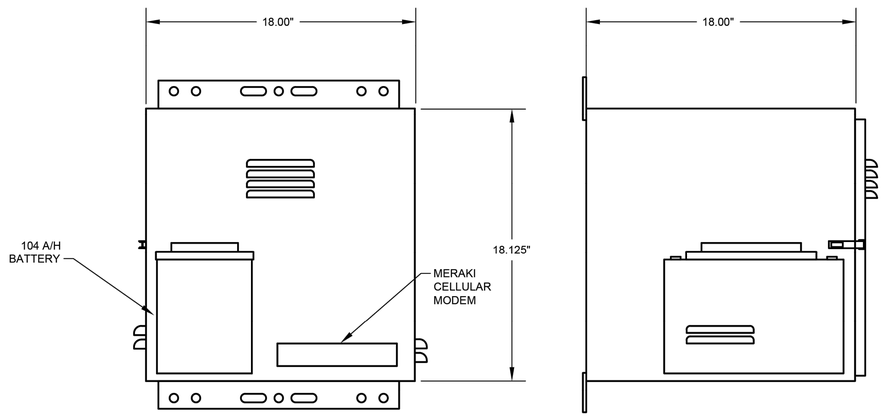

PPU-AC ENCLOSURE FRONT VIEW

PPU-AC ENCLOSURE SIDE VIEW

PPU-AC CONTROL ENCLOSURE

ELEVATION

NTS

(SEE NOTE 7)

NOTES:

1. FOR DESCRIPTION AND RATINGS OF ITEMS INDICATED WITH ITEM TAG, SEE DEVICE RATINGS SCHEDULE.
2. REFER TO SPEC SECTION 16120 FOR CONDUCTOR COLOR CODE.
3. THE PLC POWER SUPPLY SHALL FEED THE 24VDC I/O.
4. ETHERNET CABLE FOR MERAKI CELLULAR ROUTER (P1).
5. POE CABLE TO RADIO.
6. COMMUNICATION PPU-AC & SCADA SHALL BE PROVIDED BY CONTRACTOR INCLUDING TO RUN CONDUITS & WIRES.
7. COORDINATE WITH VENDOR TO PROVIDE PROPER VENTILATION WHERE APPLICABLE.

GENERAL NOTES:

1. NO ELECTRICAL MATERIAL, APPARATUS, DEVICES, APPLIANCES, FIXTURES, OR EQUIPMENT SHALL BE SOLD OR INSTALLED IN THE CITY UNLESS THEY ARE IN CONFORMANCE WITH THE PROVISIONS OF SECTION 508 CITY OF HOUSTON ELECTRICAL CODE, THE LAWS OF THE STATE OF TEXAS AND ANY APPLICABLE RULES AND REGULATIONS ISSUED UNDER THE AUTHORITY OF THE STATE STATUES. THE MAKER'S NAME, TRADEMARK, OR OTHER IDENTIFICATION SYMBOL SHALL BE PLACED ON ALL ELECTRICAL MATERIALS, APPARATUS, DEVICES, APPLIANCES, FIXTURES, AND EQUIPMENT USED OR INSTALLED UNDER THE PROVISIONS OF THIS CODE. ALL ELECTRICAL MATERIALS AND EQUIPMENT SHALL BE LISTED AND LABELED FOR THE INTENDED USE AND SHALL BE INCLUDED IN A LIST PUBLISHED BY AN APPROVAL AGENCY.

NO.	DATE	REVISION	APP.

FOR INTERIM REVIEW
ONLY NOT INTENDED FOR
PERMIT, BIDDING OR
CONSTRUCTION PURPOSES.
ENGINEER:
HOSS FOROUZAN
P.E. SERIAL NO.77748
12/15/2025

GAI
Gupta & Associates, Inc.
CONSULTING ENGINEERING
Registration No. F-2593
302 Dennis St.,
Houston, Texas 77006
Tel: 713-636-2936
Fax: 713-636-2987
email: hforouzan@gaiconsulting.com

IDS Engineering Group
13430 NW. Freeway
Suite 700
Houston, Tx. 77040
713.462.3178
TxEng Firm 2726
TxSurv Firm 10110700

CITY OF HOUSTON
HOUSTON PUBLIC WORKS

LIFT STATION RENEWAL AND REPLACEMENT FY 2023

SOUTHPOINT LIFT STATION COMMUNICATIONS DIAGRAM

WBS NUMBER	FOR CITY OF HOUSTON USE ONLY
R-000267-0179-4	
DRAWING SCALE	
HORIZ: VERT:	
CITY OF HOUSTON PM	
NAWARAJ PANTA, P.E.	

DWG. NO.	SHEET NO.
SPT-I-3	89 OF 321

IDS JOB No. 0057-085-00

PLOTTED: 12/11/2025 8:09 PM

EQUIPMENT AND DEVICE SCHEDULE

ITEM	QUANTITY	DESCRIPTION
A	1	PANEL BOARD, 120/240V, 1 PHASE, 3 WIRE, 100A, 12 CKTS
B	2	FULL VOLTAGE, NON-REVERSING, SINGLE SPEED, AUTOMATIC MOTOR STARTER W/120 VOLT CONTROL COIL, NEMA SIZE AS SCHEDULED.
C	2	TIME DELAY RELAY WITH THREE FORM C CONTACTS, 120VAC COIL AND 11 PIN SOCKET BASE.
D	1	SINGLE CHANNEL INTRINSICALLY SAFE RELAY
E	1	PROGRAMMING SCREEN (OIT)
F	3	HAND-OFF-AUTO SWITCH, 3 POSITION, HEAVY-DUTY, OILTIGHT WITH 2 SETS OF CONTACT BLOCKS (PUMP CONTROL)
G	3	INDICATING LIGHT, HEAVY DUTY, OILTIGHT, RED, 24 VDC, LED, WITH "RUN" LEGEND
H	1	PERPETUAL POWER UNIT (PPU)
I	1	PUMP ALARM RESET PUSHBUTTON
J	2	SWITCH FOR CABINET LIGHT, 120V, 20A, SPST
K	3	DUPLEX RECEPTACLE, 120V, 20A, 2 WIRE, GROUNDED
L	2	24" LED STRIP LIGHT 120V SUITABLE FOR ZERO DEGREE OPERATION.
M	1	SURGE PROTECTOR - INCOMING POWER
N	*	NOT USED.
P	2	CURRENT TRANSFORMER, RATIO AS SCHEDULED W/4-20mA OUTPUT.
Q	12	TERMINAL BLOCKS, SIZED FOR MOTOR POWER REQUIREMENTS
R	*	RELAY WITH THREE FORM C CONTACTS, AND 11 PIN SOCKET BASE
S	*	NOT USED.
T	*	NAMEPLATES, SEE SPECIFICATIONS (SEE NAMEPLATE SCHEDULE)
U	2	SOLID STATE MOTOR OVERLOAD RELAY
V	6	FUSE HOLDER & FUSES - PHASE FAILURE
W	1	NEMA 3R GASKETED ALUMINUM ENCLOSURE WITHOUT VENTS 72"H x 60"W x 36"D
X	1	DOOR MOUNTED ROTARY HANDLE DISCONNECT SWITCH (SUITABLE FOR ENVIRONMENT)
Y	1	THERMAL-MAGNETIC MOLDED CASE MAIN CIRCUIT BREAKER, SIZE AS SCHEDULED
Z	2	ADJUSTABLE INSTANTENOUS TRIP MOTOR CIRCUIT PROTECTOR, SIZE AS SCHEDULED
AA	*	TERMINAL BLOCKS
BB	2	EXTERNAL OVERLOAD RESET PUSHBUTTON MECHANISM
CC	3	ANALOG I/O SURGE SUPPRESSOR
DD	1	WIRE DUCT 2" WIDE x 2" DEEP MINIMUM
EE	1	THERMAL-MAGNETIC MODLED CASE CIRCUIT BREAKER FOR LIGHTING TRANSFORMER, SIZE AS SCHEDULED
FF	1	GROUND BUS
GG	1	10 KVA, 480 - 240/120V,1ϕ, 3W DRY TYPE NEMA 3R ENCLOSURE TRANSFORMER
HH	*	NOT USED.
II	1	120VAC - 24VAC POWER SUPPLY (AS REQUIRED)
JJ	11	CARTRIDGE FUSES & FUSE HOLDER
KK	8	QUARTER TURN CAPTIVE DOOR CLOSURE
LL	1	120VAC - 24VDC PLC POWER SUPPLY 5A
MM	2	MOTION SWITCH
NN	*	NOT USED
PP	2	INDICATING LED LIGHT, HEAVY DUTY, OILTIGHT, GREEN, 24 VDC, LED WITH " PRIMARY PLC" & "BACKUP PLC" LEGEND
QQ	*	NOT USED
RR	*	NOT USED
SS	1	COMMUNICATION ETHERNET SWITCH
TT	1	POWER SURGE PROTECTOR - CONTROL POWER
UU	2	PROGRAMMABLE LOGIC CONTROLLER WITH EXPANSION UNIT
VV	1	PHASE AND UNDER VOLTAGE MONITOR
WW	*	FUSED TERMINAL BLOCKS
XX	2	PUMP PROTECTION MODULE RATED FOR CLASS I, DIVISION I
YY	2	ANALOG SIGNAL ISOLATOR
ZZ	-	NOT USED
AB	-	NOT USED.
AC	1	POWER DISTRIBUTION BLOCK
AD	1	NEUTRAL LUG
AE	1	6" EXHAUST FAN, 120V, STAINLESS FILTERS & GRILL PACKAGE W/BUG GUARD
AF	1	T-STAT FOR EXHAUST FAN

* - AS SCHEDULED

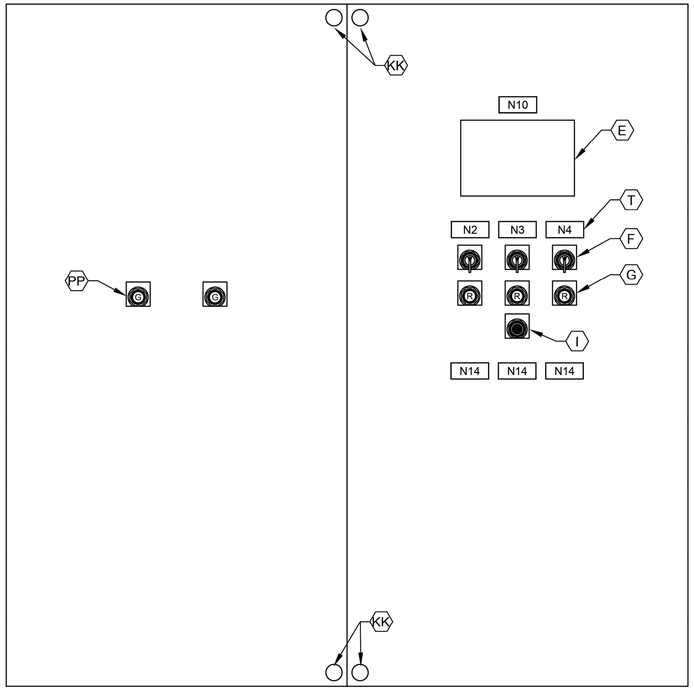

CONTROL PANEL FRONT INNER DOOR

ELEVATION

NTS

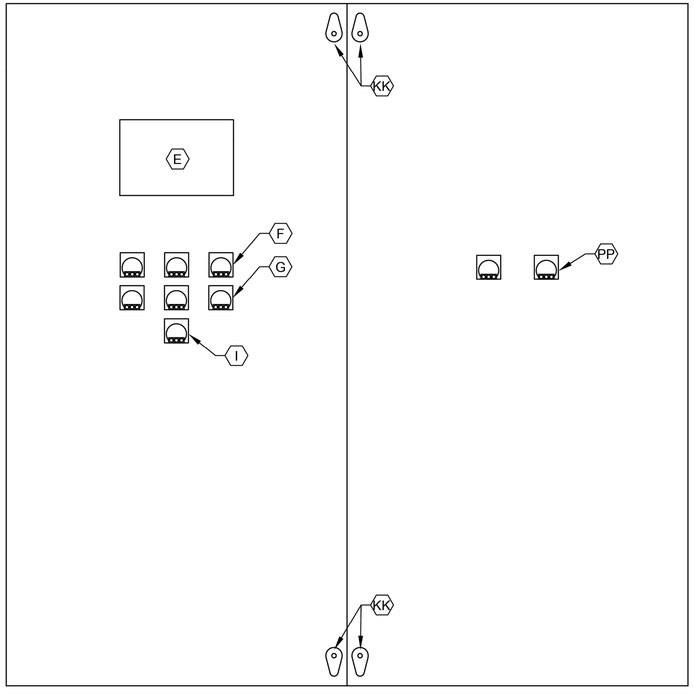

CONTROL PANEL BACK INNER DOOR

ELEVATION

NTS

NOTES:

1. NAMEPLATES SHALL BE MOUNTED TO PANELS USING STAINLESS STEEL HARDWARE.
2. REFER SPECIFICATIONS FOR ALL PANEL COMPONENTS.

GENERAL NOTES:

1. NO ELECTRICAL MATERIAL, APPARATUS, DEVICES, APPLIANCES, FIXTURES, OR EQUIPMENT SHALL BE SOLD OR INSTALLED IN THE CITY UNLESS THEY ARE IN CONFORMANCE WITH THE PROVISIONS OF SECTION 508 CITY OF HOUSTON ELECTRICAL CODE, THE LAWS OF THE STATE OF TEXAS AND ANY APPLICABLE RULES AND REGULATIONS ISSUED UNDER THE AUTHORITY OF THE STATE STATUES. THE MAKER'S NAME, TRADEMARK, OR OTHER IDENTIFICATION SYMBOL SHALL BE PLACED ON ALL ELECTRICAL MATERIALS, APPARATUS, DEVICES, APPLIANCES, FIXTURES, AND EQUIPMENT USED OR INSTALLED UNDER THE PROVISIONS OF THIS CODE. ALL ELECTRICAL MATERIALS AND EQUIPMENT SHALL BE LISTED AND LABELED FOR THE INTENDED USE AND SHALL BE INCLUDED IN A LIST PUBLISHED BY AN APPROVAL AGENCY.

NO.	DATE	REVISION	APP.

FOR INTERIM REVIEW
ONLY NOT INTENDED FOR
PERMIT, BIDDING OR
CONSTRUCTION PURPOSES.
ENGINEER:
HOSS FOROUZAN
P.E. SERIAL NO.77748
12/15/2025

GAI
Gupta & Associates, Inc.
CONSULTING ENGINEERING
Registration No. F-2593
302 Dennis St.,
Houston, Texas 77006
Tel: 713-636-2936
Fax: 713-636-2987
email: hforouzan@gaiconsulting.com

IDS Engineering Group
13430 NW. Freeway
Suite 700
Houston, Tx. 77040
713.462.3178
TxEng Firm 2726
TxSurv Firm 10110700

CITY OF HOUSTON
HOUSTON PUBLIC WORKS

LIFT STATION RENEWAL
AND REPLACEMENT FY 2023

SOUTHPOINT LIFT STATION CONTROL CABINET EQUIPMENT LAYOUT & SCHEDULE

WBS NUMBER	FOR CITY OF HOUSTON USE ONLY
R-000267-0179-4	
DRAWING SCALE	
HORIZ: VERT:	
CITY OF HOUSTON PM	
NAWARAJ PANTA, P.E.	
SHEET NO. 90 OF 321	

DWG. NO. SPT–I–4

IDS JOB No. 0057-085-00

FILE PATH: O:\H8108_Lift Station Rehabilitation And Reconstruction (IDS)\6 Drawings\Instrumentation And Control\Working\South Point\H8108_SPT–I–04.dwg

PLOTTED: 12/11/2025 8:09 PM

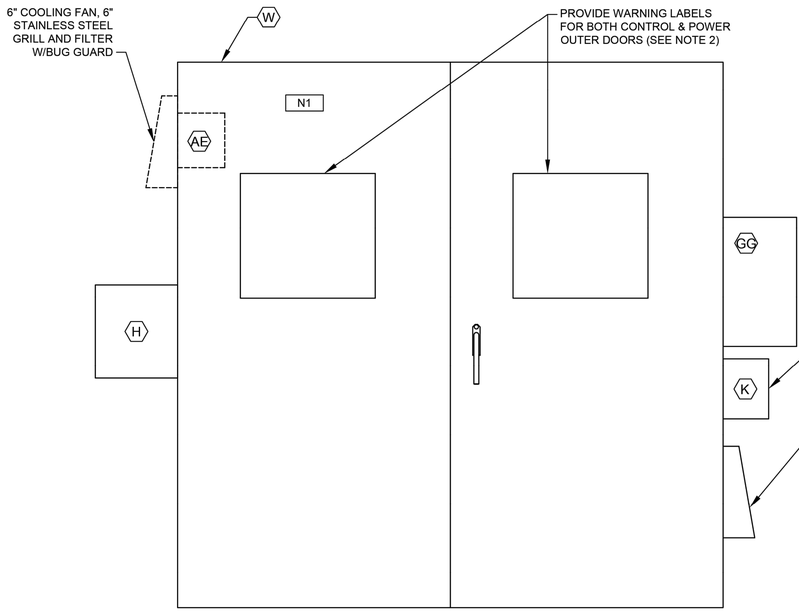

CONTROL CABINET (CONTROL SIDE)
OUTER DOOR

ELEVATION

NTS

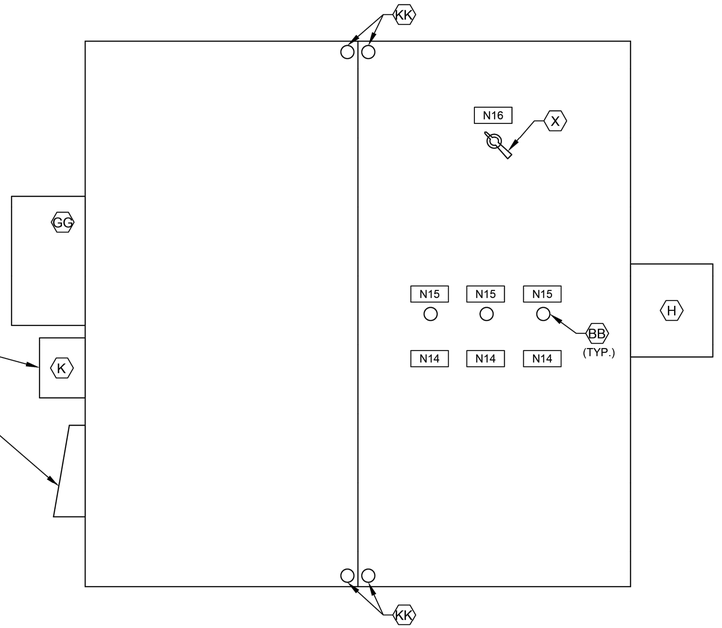

CONTROL CABINET (POWER SIDE)
INNER DOOR

ELEVATION

NTS

(SEE NOTE 1)

NOTES:

1. SEE SHEET SPT-I-4 FOR EQUIPMENT SCHEDULE.
2. REFER TO NEC SECTIONS 110.16 & 110.21

GENERAL NOTES:

1. NO ELECTRICAL MATERIAL, APPARATUS, DEVICES, APPLIANCES, FIXTURES, OR EQUIPMENT SHALL BE SOLD OR INSTALLED IN THE CITY UNLESS THEY ARE IN CONFORMANCE WITH THE PROVISIONS OF SECTION 508 CITY OF HOUSTON ELECTRICAL CODE, THE LAWS OF THE STATE OF TEXAS AND ANY APPLICABLE RULES AND REGULATIONS ISSUED UNDER THE AUTHORITY OF THE STATE STATUES. THE MAKER'S NAME, TRADEMARK, OR OTHER IDENTIFICATION SYMBOL SHALL BE PLACED ON ALL ELECTRICAL MATERIALS, APPARATUS, DEVICES, APPLIANCES, FIXTURES, AND EQUIPMENT USED OR INSTALLED UNDER THE PROVISIONS OF THIS CODE. ALL ELECTRICAL MATERIALS AND EQUIPMENT SHALL BE LISTED AND LABELED FOR THE INTENDED USE AND SHALL BE INCLUDED IN A LIST PUBLISHED BY AN APPROVAL AGENCY.

NAMEPLATE SCHEDULE

DESIGNATION	ENGRAVED
N1	PUMP STATION DESIGNATION
N2	PUMP NO. 1
N3	PUMP NO. 2
N4	PUMP NO. 3
N5	NOT USED.
N6	NOT USED.
N7	NOT USED.
N8	NOT USED.
N9	NOT USED.
N10	PROGRAMMING SCREEN
N11	NOT USED.
N12	PRIMARY PLC
N13	BACKUP PLC
N14	MOTOR DATA HORSEPOWER (OUTPUT) ---------- RPM AT FULL LOAD ---------- TIME RATING ---------- FREQUENCY ---------- NUMBER OF PHASES ---------- MODEL NUMBER ---------- RATED VOLTAGE ---------- SERVICE FACTOR ---------- FULL LOAD AMPS ---------- INSULATION CLAS ---------- NEMA DESIGN LETTER ---------- TEMPERATURE RISE ---------- NEMA FRAME SIZE ---------- DATE OF MANUFACTURE ---------- THERMO PROTECTION (IF REQUIRED) -- MOISTURE PROTECTION (IF REQUIRED)-
N15	EXTERNAL OVERLOAD RESET PUSH BUTTON MECHANISM
N16	MAIN BREAKER

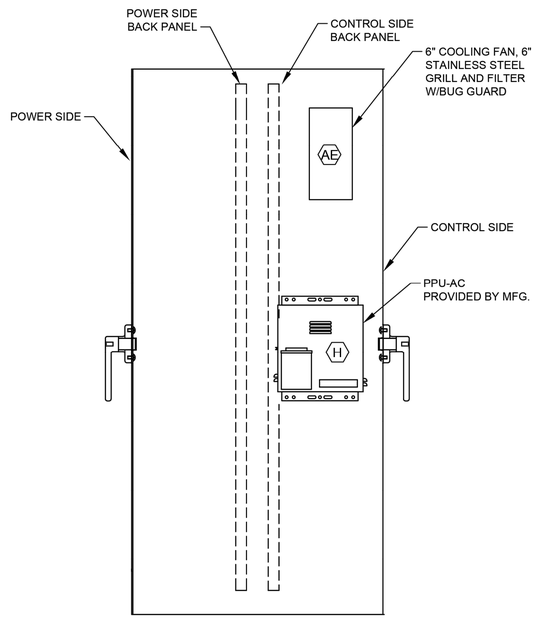

CONTROL CABINET (LEFT SIDE VIEW)

ELEVATION

NTS

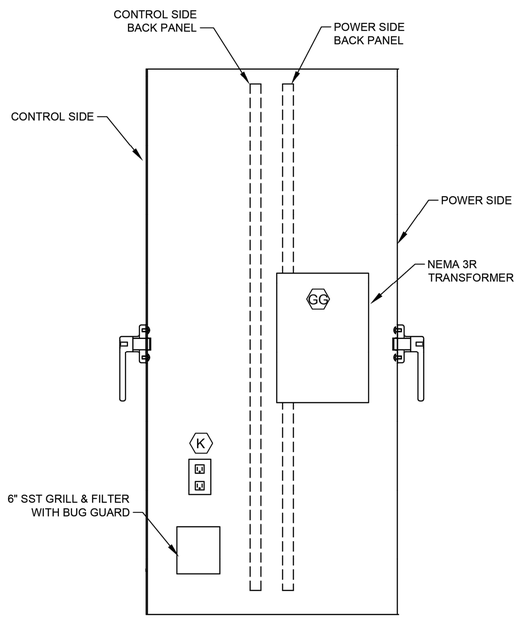

CONTROL CABINET (RIGHT SIDE VIEW)

ELEVATION

NTS

NO.	DATE	REVISION	APP.

FOR INTERIM REVIEW
ONLY NOT INTENDED FOR
PERMIT, BIDDING OR
CONSTRUCTION PURPOSES.
ENGINEER:
HOSS FOROUZAN
P.E. SERIAL NO.77748
12/15/2025

GAI
Gupta & Associates, Inc.
CONSULTING ENGINEERING
Registration No. F-2593
302 Dennis St.,
Houston, Texas 77006
Tel: 713-636-2936
Fax: 713-636-2987
email: hforouzan@gaiconsulting.com

IDS Engineering Group
13430 NW. Freeway
Suite 700
Houston, Tx. 77040
713.462.3178
TxEng Firm 2726
TxSurv Firm 10110700

CITY OF HOUSTON
HOUSTON PUBLIC WORKS

LIFT STATION RENEWAL
AND REPLACEMENT FY 2023

SOUTHPOINT LIFT STATION CONTROL PANEL EQUIPMENT LAYOUT–I

WBS NUMBER	FOR CITY OF HOUSTON USE ONLY
R-000267-0179-4	
DRAWING SCALE	
HORIZ: VERT:	
CITY OF HOUSTON PM	
NAWARAJ PANTA, P.E.	
SHEET NO. 91 OF 321	

DWG. NO. SPT–I–5

IDS JOB No. 0057-085-00

FILE PATH: O:\H8108_Lift Station Rehabilitation And Reconstruction (IDS)\6 Drawings\Instrumentation And Control\Working\South Point\H8108_SPT–I–05.dwg

PLOTTED: 12/11/2025 8:09 PM

FILE PATH: O:\H8108_Lift Station Rehabilitation And Reconstruction (IDS)\6 Drawings\Instrumentation And Control\Working\South Point\H8108_SPT-I-06.dwg

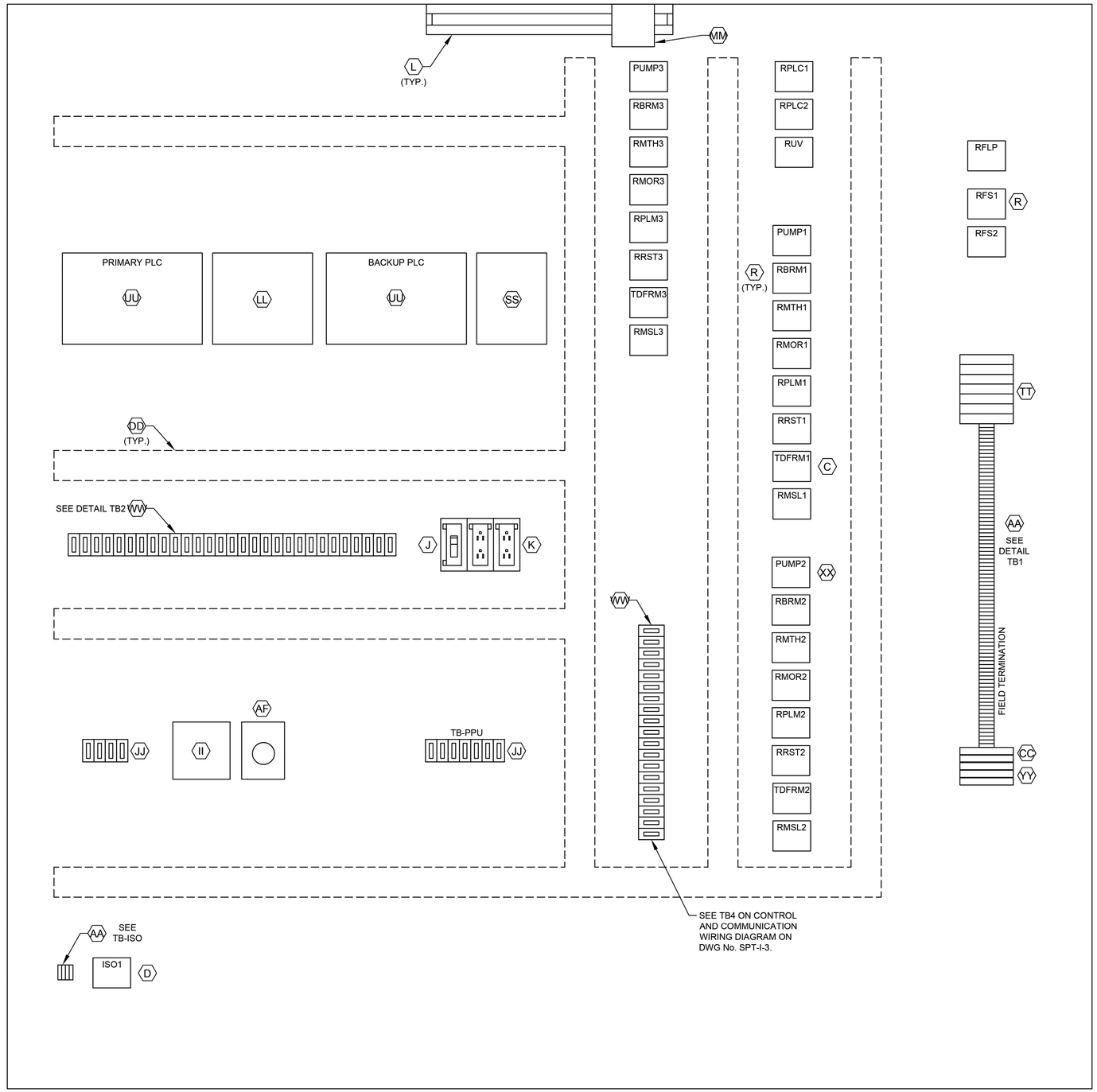

CONTROL PANEL
ELEVATION

L1A
L1N
SPARE
3
3N
49
50
51
52
53
54
1004
1
24V-
24V-
1002
2
11
1001
1001A
12
1003
1003A
1002
1004
18
3N
19
20
36
36N
41
42
43
44
SPARE
L1A
L1N
103
104
105
106
107
108
110
113
115
116
119
SPARE
203
204
205
206
207
208
210
213
215
216
219

DETAIL TB1

ALL L AND N FOR EACH PUMP CONTROL TO BE FUSED

303
304
305
306
307
308
310
313
315
316
319
36A
37A
50
52
54
52A
54A
L+
M
35B
38B
41B
47B
13B
13AB
13GB
L+
M
14B
14AB
14GB
L+
M
13
13A
13G
14
14A
14G
SPARE
18
SPARE
28
29
32
35B
33
42
44
SPARE
103
104
115
109
110
118
120
121
122
123
SPARE
209
210
211
218
220
222
223

DETAIL TB2

1500
1501
1503
1504

DETAIL TB-ISO

LEGEND	
TAG	DESCRIPTION
RMTH	MOTOR HIGH TEMPERATURE ALARM RELAY
RPLM	PLC PUMP RUN RELAY
RRST	PUMP RESET AUX RELAY
RPLC	PLC MODE AUX RELAY
RMOR	MOTOR OVERLOAD ALARM RELAY
RBRM	BACKUP SYSTEM RUN RELAY
RUV	UNDER VOLTAGE RELAY
ISO	INTRINSICALLY SAFE RELAY
RFS	PUMP RUN FLOAT SWITCH RELAY
TDFRM	TIMER FLOAT SWITCH RUN RELAY
RMSL	MOTOR SEAL LEAK ALARM RELAY
RFLP	FLOAT LOCKOUT PUMP RELAY

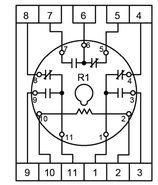

RELAY DETAIL
ITEM R

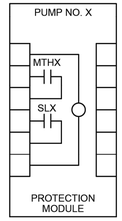

PUMP PROTECTION MODULE
DETAIL, ITEM XX

NOTE: REPLACE "X" WITH APPROPRIATE PUMP NO.

NOTES:

1. SEE SHEET SPT-I-4 FOR EQUIPMENT SCHEDULE.

GENERAL NOTES:

1. NO ELECTRICAL MATERIAL, APPARATUS, DEVICES, APPLIANCES, FIXTURES, OR EQUIPMENT SHALL BE SOLD OR INSTALLED IN THE CITY UNLESS THEY ARE IN CONFORMANCE WITH THE PROVISIONS OF SECTION 508 CITY OF HOUSTON ELECTRICAL CODE, THE LAWS OF THE STATE OF TEXAS AND ANY APPLICABLE RULES AND REGULATIONS ISSUED UNDER THE AUTHORITY OF THE STATE STATUES. THE MAKER'S NAME, TRADEMARK, OR OTHER IDENTIFICATION SYMBOL SHALL BE PLACED ON ALL ELECTRICAL MATERIALS, APPARATUS, DEVICES, APPLIANCES, FIXTURES, AND EQUIPMENT USED OR INSTALLED UNDER THE PROVISIONS OF THIS CODE. ALL ELECTRICAL MATERIALS AND EQUIPMENT SHALL BE LISTED AND LABELED FOR THE INTENDED USE AND SHALL BE INCLUDED IN A LIST PUBLISHED BY AN APPROVAL AGENCY.

NO.	DATE	REVISION	APP.

FOR INTERIM REVIEW
ONLY NOT INTENDED FOR
PERMIT, BIDDING OR
CONSTRUCTION PURPOSES.
ENGINEER:
HOSS FOROUZAN
P.E. SERIAL NO.77748
12/15/2025

GAI
Gupta & Associates, Inc.
CONSULTING ENGINEERING
Registration No. F-2593
302 Dennis St.,
Houston, Texas 77006
Tel: 713-636-2936
Fax: 713-636-2987
email: hforouzan@gaiconsulting.com

IDS Engineering Group
13430 NW. Freeway
Suite 700
Houston, Tx. 77040
713.462.3178
TxEng Firm 2726
TxSurv Firm 10110700

CITY OF HOUSTON
HOUSTON PUBLIC WORKS

LIFT STATION RENEWAL
AND REPLACEMENT FY 2023

SOUTHPOINT LIFT STATION CONTROL PANEL EQUIPMENT LAYOUT—II

WBS NUMBER	FOR CITY OF HOUSTON USE ONLY
R-000267-0179-4	
DRAWING SCALE	
HORIZ: VERT:	
CITY OF HOUSTON PM	
NAWARAJ PANTA, P.E.	
SHEET NO. 92 OF 321	

DWG. NO.
SPT—I—6

IDS JOB No. 0057-085-00

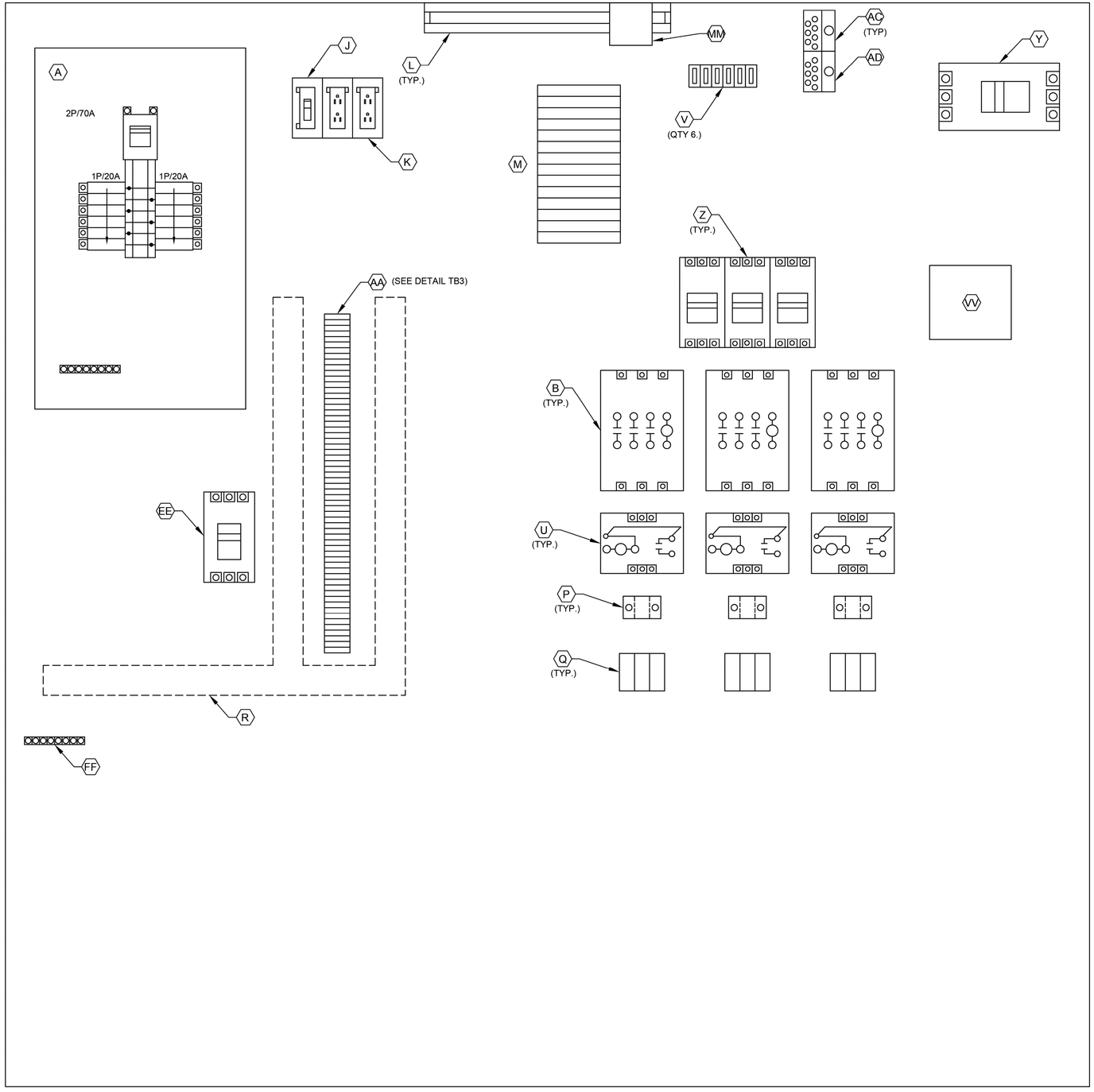

POWER PANEL
ELEVATION

3
18
L1A
L1N
SPARE
SPARE
103
104
105
106
107
108
110
113
115
116
119
SPARE
203
204
205
206
207
208
210
213
215
216
216
219
SPARE
303
304
305
306
307
308
310
313
315
316
316
319
SPARE
SPARE
SPARE
SPARE
SPARE
SPARE
SPARE
SPARE
SPARE
SPARE
SPARE

DETAIL TB3

NOTES:

1. SEE SHEET SPT-I-4 FOR EQUIPMENT SCHEDULE.

GENERAL NOTES:

1. NO ELECTRICAL MATERIAL, APPARATUS, DEVICES, APPLIANCES, FIXTURES, OR EQUIPMENT SHALL BE SOLD OR INSTALLED IN THE CITY UNLESS THEY ARE IN CONFORMANCE WITH THE PROVISIONS OF SECTION 508 CITY OF HOUSTON ELECTRICAL CODE, THE LAWS OF THE STATE OF TEXAS AND ANY APPLICABLE RULES AND REGULATIONS ISSUED UNDER THE AUTHORITY OF THE STATE STATUES. THE MAKER'S NAME, TRADEMARK, OR OTHER IDENTIFICATION SYMBOL SHALL BE PLACED ON ALL ELECTRICAL MATERIALS, APPARATUS, DEVICES, APPLIANCES, FIXTURES, AND EQUIPMENT USED OR INSTALLED UNDER THE PROVISIONS OF THIS CODE. ALL ELECTRICAL MATERIALS AND EQUIPMENT SHALL BE LISTED AND LABELED FOR THE INTENDED USE AND SHALL BE INCLUDED IN A LIST PUBLISHED BY AN APPROVAL AGENCY.

NO.	DATE	REVISION	APP.

FOR INTERIM REVIEW
ONLY NOT INTENDED FOR
PERMIT, BIDDING OR
CONSTRUCTION PURPOSES.
ENGINEER:
HOSS FOROUZAN
P.E. SERIAL NO.77748
12/15/2025

GAI
Gupta & Associates, Inc.
CONSULTING ENGINEERING
Registration No. F-2593
302 Dennis St.,
Houston, Texas 77006
Tel: 713-636-2936
Fax: 713-636-2987
email: hforouzan@gaiconsulting.com

IDS Engineering Group
13430 NW. Freeway
Suite 700
Houston, Tx. 77040
713.462.3178
TxEng Firm 2726
TxSurv Firm 10110700

CITY OF HOUSTON
HOUSTON PUBLIC WORKS

LIFT STATION RENEWAL AND REPLACEMENT FY 2023

SOUTHPOINT LIFT STATION CONTROL PANEL EQUIPMENT LAYOUT–III

WBS NUMBER	FOR CITY OF HOUSTON USE ONLY
R-000267-0179-4	
DRAWING SCALE	
HORIZ: VERT:	
CITY OF HOUSTON PM	
NAWARAJ PANTA, P.E.	
DWG. NO. SPT–I–7	SHEET NO. 93 OF 321

IDS JOB No. 0057-085-00

PLOTTED: 12/11/2025 8:09 PM

FILE PATH: O:\H8108_Lift Station Rehabilitation And Reconstruction (IDS)\6 Drawings\Instrumentation And Control\Working\South Point\H8108_SPT–I–07.dwg

PLOTTED: 12/11/2025 8:09 PM

FILE PATH: O:\H8108_Lift Station Rehabilitation And Reconstruction (IDS)\6 Drawings\Instrumentation And Control\Working\South Point\H8108_SPT-I-08.dwg

FIELD

CONTROL PANEL

DOOR

INTERIOR PANEL

PLC

120 VAC POWER

L1

L1A

L1N

JE-1 CONTROL POWER SURGE PROTECTOR (TT)

24VDC

3

3N

120V CKT3 FROM LIGHTING PANEL

L3A

20A

T-STAT

AE

FAN

RPLC3

11

8

RFS3

1

3

OIT

E

BACK UP PLC

36A 50mA I0.1 BACKUP PLC MODE ACTIVE

37A 50mA I0.2 FLOAT HIGH-HIGH LEVEL ALARM ALL PUMPS ON

ZS-1 TR
MANUAL TRANSFER SWITCH
CONTACTS SHOWING
SOURCE OF POWER
(SEE NOTE 1)

ZI-1A

ZI-1B

49

50

51

52

53

54

50 50mA I0.4 MTS IN NORMAL SOURCE

52 50mA I0.5 MTS IN EMERGENCY SOURCE

54 50mA I0.7 SPARE

120V CKT10 FROM LIGHTING PANEL

L10A

20A

RUV

6

7

INTRINSICALLY SAFE RELAY

ISO 1

5

6

1

3

4

RFS1

R

2

10

RFS2

R

2

10

LEVEL
TRANSMITTER J-BOX

HIGH LEVEL ALARM
FS1

HIGH-HIGH LEVEL
ALARM
FS2

FLOAT SWITCHES LOCATED
INSIDE WET WELL

1500

1501

1503

1504

RFS1

6

7

RFS1

1

3

52A 50mA I0.2 FLOAT HIGH-HIGH LEVEL ALARM ALL PUMPS ON

54A 50mA I0.3 SPARE

L1A

L1N

MATCHLINE 1

LEGEND

△ DEVICE OR FIELD TERMINAL LOCATED AT MOTOR

✳ DEVICE OR FIELD TERMINAL LOCATED REMOTE

□ DEVICE OR FIELD TERMINAL LOCATED AT MCC/POWER PANEL

■ FIELD TERMINAL LOCATED AT CONTROL PANEL

▲ REMOTE TERMINAL

● DEVICE TERMINAL NO.

◆ PLC INTERFACE TERMINAL

NOTES:

1. PROVIDE AUTO TRANSFER SWITCH DRY CONTACT.
2. ALL FLOAT CONTROL CIRCUIT WIRES COLOR SHALL BE YELLOW.

GENERAL NOTES:

1. NO ELECTRICAL MATERIAL, APPARATUS, DEVICES, APPLIANCES, FIXTURES, OR EQUIPMENT SHALL BE SOLD OR INSTALLED IN THE CITY UNLESS THEY ARE IN CONFORMANCE WITH THE PROVISIONS OF SECTION 508 CITY OF HOUSTON ELECTRICAL CODE, THE LAWS OF THE STATE OF TEXAS AND ANY APPLICABLE RULES AND REGULATIONS ISSUED UNDER THE AUTHORITY OF THE STATE STATUES. THE MAKER'S NAME, TRADEMARK, OR OTHER IDENTIFICATION SYMBOL SHALL BE PLACED ON ALL ELECTRICAL MATERIALS, APPARATUS, DEVICES, APPLIANCES, FIXTURES, AND EQUIPMENT USED OR INSTALLED UNDER THE PROVISIONS OF THIS CODE. ALL ELECTRICAL MATERIALS AND EQUIPMENT SHALL BE LISTED AND LABELED FOR THE INTENDED USE AND SHALL BE INCLUDED IN A LIST PUBLISHED BY AN APPROVAL AGENCY.

NO.	DATE	REVISION	APP.

FOR INTERIM REVIEW
ONLY NOT INTENDED FOR
PERMIT, BIDDING OR
CONSTRUCTION PURPOSES.
ENGINEER:
HOSS FOROUZAN
P.E. SERIAL NO.77748
12/15/2025

GAI
Gupta & Associates, Inc.
CONSULTING ENGINEERING
Registration No. F-2593
302 Dennis St.,
Houston, Texas 77006
Tel: 713-636-2936
Fax: 713-636-2987
email: hforouzan@gaiconsulting.com

IDS Engineering Group
13430 NW. Freeway
Suite 700
Houston, Tx. 77040
713.462.3178
TxEng Firm 2726
TxSurv Firm 10110700

CITY OF HOUSTON

HOUSTON PUBLIC WORKS

LIFT STATION RENEWAL
AND REPLACEMENT FY 2023

SOUTHPOINT LIFT STATION
CONTROL PANEL
CONTROL WIRING DIAGRAM–I

WBS NUMBER	FOR CITY OF HOUSTON USE ONLY
R-000267-0179-4	
DRAWING SCALE	
HORIZ: VERT:	
CITY OF HOUSTON PM	
NAWARAJ PANTA, P.E.	
SHEET NO. 94 OF 321	

DWG. NO. SPT–I–8

IDS JOB No. 0057-085-00

PLOTTED: 12/11/2025 8:09 PM

FILE PATH: O:\H8108_Lift Station Rehabilitation And Reconstruction (IDS)\6 Drawings\Instrumentation And Control\Working\South Point\H8108_SPT-I-09.dwg

NO.	DATE	REVISION	APP.

FIELD | CONTROL PANEL: DOOR | CONTROL PANEL: INTERIOR PANEL | CONTROL PANEL: PLC

MATCHLINE 1

120 VAC POWER

24VDC

L1A 3

3N L1N

RADAR LEVEL TRANSMITTER JUNCTION BOX

MFG. CABLE

PRIMARY RADAR LEVEL TRANSMITTER

LT-1

MFG. CABLE

BACK UP RADAR LEVEL TRANSMITTER

LT-2

RBRM1 — 5 — 2 — R — 10

RBRM2 — 6 — 2 — R — 10

RBRM3 — 6 — 2 — R — 10

ANALOG ISOLATOR (YY)

1004

1

24-

1002

24V-

2

ANALOG ISOLATOR (YY)

ANALOG I/O SURGE SUPPRESSOR (CC)

11 — 1001 — 1001A — 12 — 1003 — 1003A

1 — 24V+

2 — 1001B

3 — 24V+

4 — 1003B

BACK UP PLC

L+		CPU POWER
M		CPU COMMON
35B	1A	QO.0 PUMP NO.1 CALL TO RUN
38B	1A	QO.1 PUMP NO.2 CALL TO RUN
41B	1A	QO.2 PUMP NO.3 CALL TO RUN
44B	1A	QO.3 SPARE
47B	1A	QO.4 SPARE
13B	50mA	AIO.0 PRIMARY WET WELL LEVEL TRANSMITTER
13AB		
13GB		
L+		CPU POWER
M		CPU COMMON
14B	50mA	AIO.2 BACKUP WET WELL LEVEL TRANSMITTER
14AB		
14GB		
L+		CPU POWER
M		CPU COMMON
13	50mA	AI0.0 PRIMARY WET WELL LEVEL TRANSMITTER
13A		
13G		
14	50mA	AI0.2 BACKUP WET WELL LEVEL TRANSMITTER
14A		
14G		

MATCHLINE 2

LEGEND

- △ DEVICE OR FIELD TERMINAL LOCATED AT MOTOR
- ✳ DEVICE OR FIELD TERMINAL LOCATED REMOTE
- □ DEVICE OR FIELD TERMINAL LOCATED AT MCC/POWER PANEL
- ■ FIELD TERMINAL LOCATED AT CONTROL PANEL
- ▲ REMOTE TERMINAL
- ● DEVICE TERMINAL NO.
- ◆ PLC INTERFACE TERMINAL

GENERAL NOTES:

1. NO ELECTRICAL MATERIAL, APPARATUS, DEVICES, APPLIANCES, FIXTURES, OR EQUIPMENT SHALL BE SOLD OR INSTALLED IN THE CITY UNLESS THEY ARE IN CONFORMANCE WITH THE PROVISIONS OF SECTION 508 CITY OF HOUSTON ELECTRICAL CODE, THE LAWS OF THE STATE OF TEXAS AND ANY APPLICABLE RULES AND REGULATIONS ISSUED UNDER THE AUTHORITY OF THE STATE STATUES. THE MAKER'S NAME, TRADEMARK, OR OTHER IDENTIFICATION SYMBOL SHALL BE PLACED ON ALL ELECTRICAL MATERIALS, APPARATUS, DEVICES, APPLIANCES, FIXTURES, AND EQUIPMENT USED OR INSTALLED UNDER THE PROVISIONS OF THIS CODE. ALL ELECTRICAL MATERIALS AND EQUIPMENT SHALL BE LISTED AND LABELED FOR THE INTENDED USE AND SHALL BE INCLUDED IN A LIST PUBLISHED BY AN APPROVAL AGENCY.

FOR INTERIM REVIEW
ONLY NOT INTENDED FOR
PERMIT, BIDDING OR
CONSTRUCTION PURPOSES.
ENGINEER:
HOSS FOROUZAN
P.E. SERIAL NO.77748
12/15/2025

GAI
Gupta & Associates, Inc.
CONSULTING ENGINEERING
Registration No. F-2593
302 Dennis St.,
Houston, Texas 77006
Tel: 713-636-2916
Fax: 713-636-2987
email: hforouzan@gaiconsulting.com

IDS Engineering Group
13430 NW. Freeway
Suite 700
Houston, Tx. 77040
713.462.3178
TxEng Firm 2726
TxSurv Firm 10110700

CITY OF HOUSTON
HOUSTON PUBLIC WORKS

LIFT STATION RENEWAL AND REPLACEMENT FY 2023

SOUTHPOINT LIFT STATION CONTROL PANEL CONTROL WIRING DIAGRAM—II

WBS NUMBER	FOR CITY OF HOUSTON USE ONLY
R-000267-0179-4	
DRAWING SCALE	
HORIZ: VERT:	
CITY OF HOUSTON PM	
NAWARAJ PANTA, P.E.	
SHEET NO. 95 OF 321	

DWG. NO. SPT—I—9

IDS JOB No. 0057-085-00

PLOTTED: 12/11/2025 8:09 PM

FILE PATH: O:\H8108_Lift Station Rehabilitation And Reconstruction (IDS)\6 Drawings\Instrumentation And Control\Working\South Point\H8108_SPT-I-10.dwg

FIELD	POWER PANEL	CONTROL PANEL		
		DOOR	INTERIOR PANEL	PLC

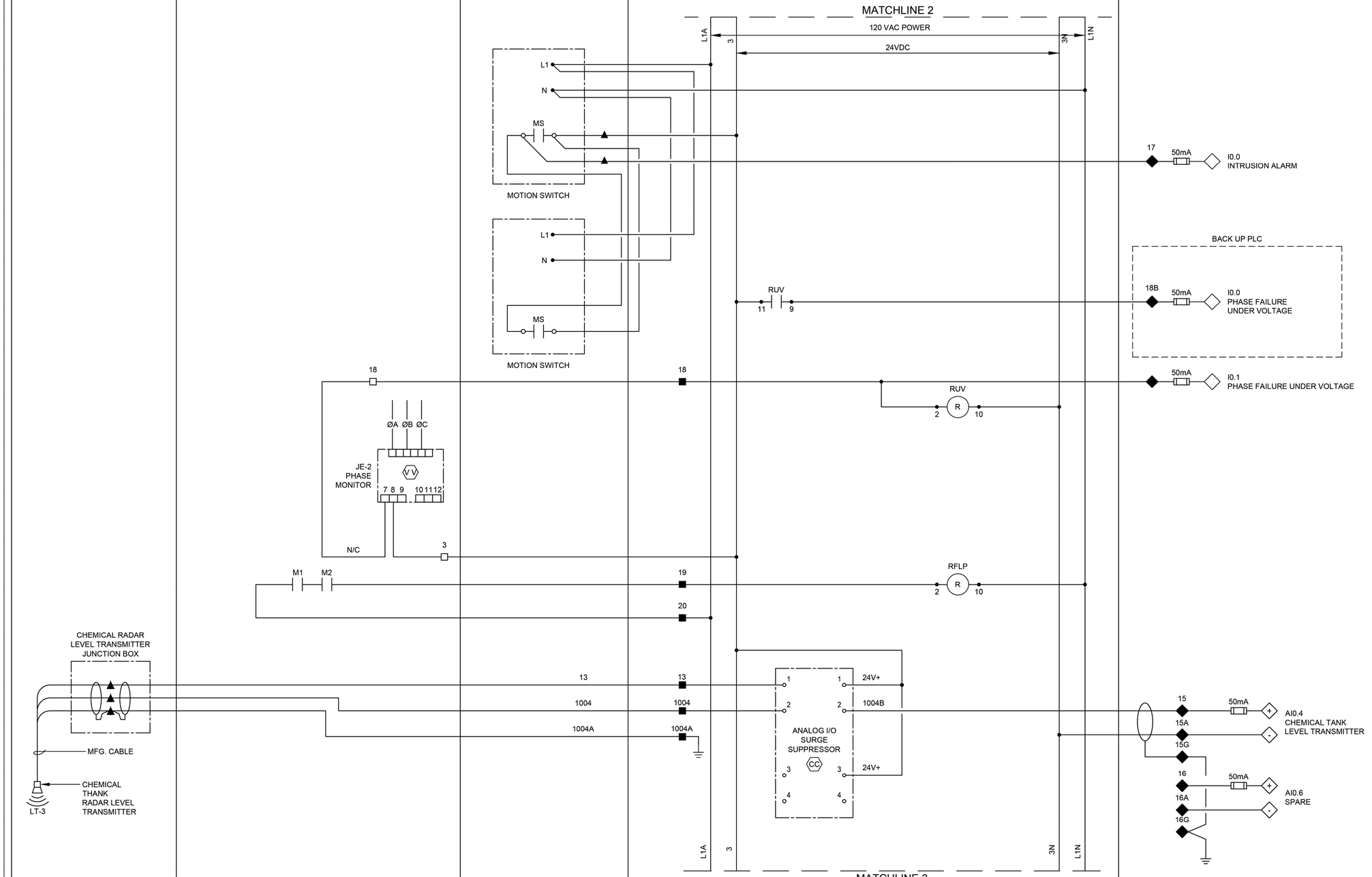

LEGEND

- △ DEVICE OR FIELD TERMINAL LOCATED AT MOTOR
- ✳ DEVICE OR FIELD TERMINAL LOCATED REMOTE
- □ DEVICE OR FIELD TERMINAL LOCATED AT MCC/POWER PANEL
- ■ FIELD TERMINAL LOCATED AT CONTROL PANEL
- ▲ REMOTE TERMINAL
- ● DEVICE TERMINAL NO.
- ◆ PLC INTERFACE TERMINAL

GENERAL NOTES:

1. NO ELECTRICAL MATERIAL, APPARATUS, DEVICES, APPLIANCES, FIXTURES, OR EQUIPMENT SHALL BE SOLD OR INSTALLED IN THE CITY UNLESS THEY ARE IN CONFORMANCE WITH THE PROVISIONS OF SECTION 508 CITY OF HOUSTON ELECTRICAL CODE, THE LAWS OF THE STATE OF TEXAS AND ANY APPLICABLE RULES AND REGULATIONS ISSUED UNDER THE AUTHORITY OF THE STATE STATUES. THE MAKER'S NAME, TRADEMARK, OR OTHER IDENTIFICATION SYMBOL SHALL BE PLACED ON ALL ELECTRICAL MATERIALS, APPARATUS, DEVICES, APPLIANCES, FIXTURES, AND EQUIPMENT USED OR INSTALLED UNDER THE PROVISIONS OF THIS CODE. ALL ELECTRICAL MATERIALS AND EQUIPMENT SHALL BE LISTED AND LABELED FOR THE INTENDED USE AND SHALL BE INCLUDED IN A LIST PUBLISHED BY AN APPROVAL AGENCY.

NO.	DATE	REVISION	APP.

FOR INTERIM REVIEW
ONLY NOT INTENDED FOR
PERMIT, BIDDING OR
CONSTRUCTION PURPOSES.
ENGINEER:
HOSS FOROUZAN
P.E. SERIAL NO.77748
12/15/2025

GAI
Gupta & Associates, Inc.
CONSULTING ENGINEERING
Registration No. F-2593
302 Dennis St.,
Houston, Texas 77006
Tel: 713-636-2936
Fax: 713-636-2987
email: hforouzan@gaiconsulting.com

IDS Engineering Group
13430 NW. Freeway
Suite 700
Houston, Tx. 77040
713.462.3178
TxEng Firm 2726
TxSurv Firm 10110700

CITY OF HOUSTON
HOUSTON PUBLIC WORKS

LIFT STATION RENEWAL
AND REPLACEMENT FY 2023

SOUTHPOINT LIFT STATION CONTROL PANEL CONTROL WIRING DIAGRAM—III

WBS NUMBER	FOR CITY OF HOUSTON USE ONLY
R-000267-0179-4	
DRAWING SCALE	
HORIZ: VERT:	
CITY OF HOUSTON PM	
NAWARAJ PANTA, P.E.	
DWG. NO. SPT—I—10	SHEET NO. 96 OF 321

IDS JOB No. 0057-085-00

PLOTTED: 12/11/2025 8:09 PM

FILE PATH: O:\H8108_Lift Station Rehabilitation And Reconstruction (IDS)\6 Drawings\Instrumentation And Control\Working\South Point\H8108_SPT-I-11.dwg

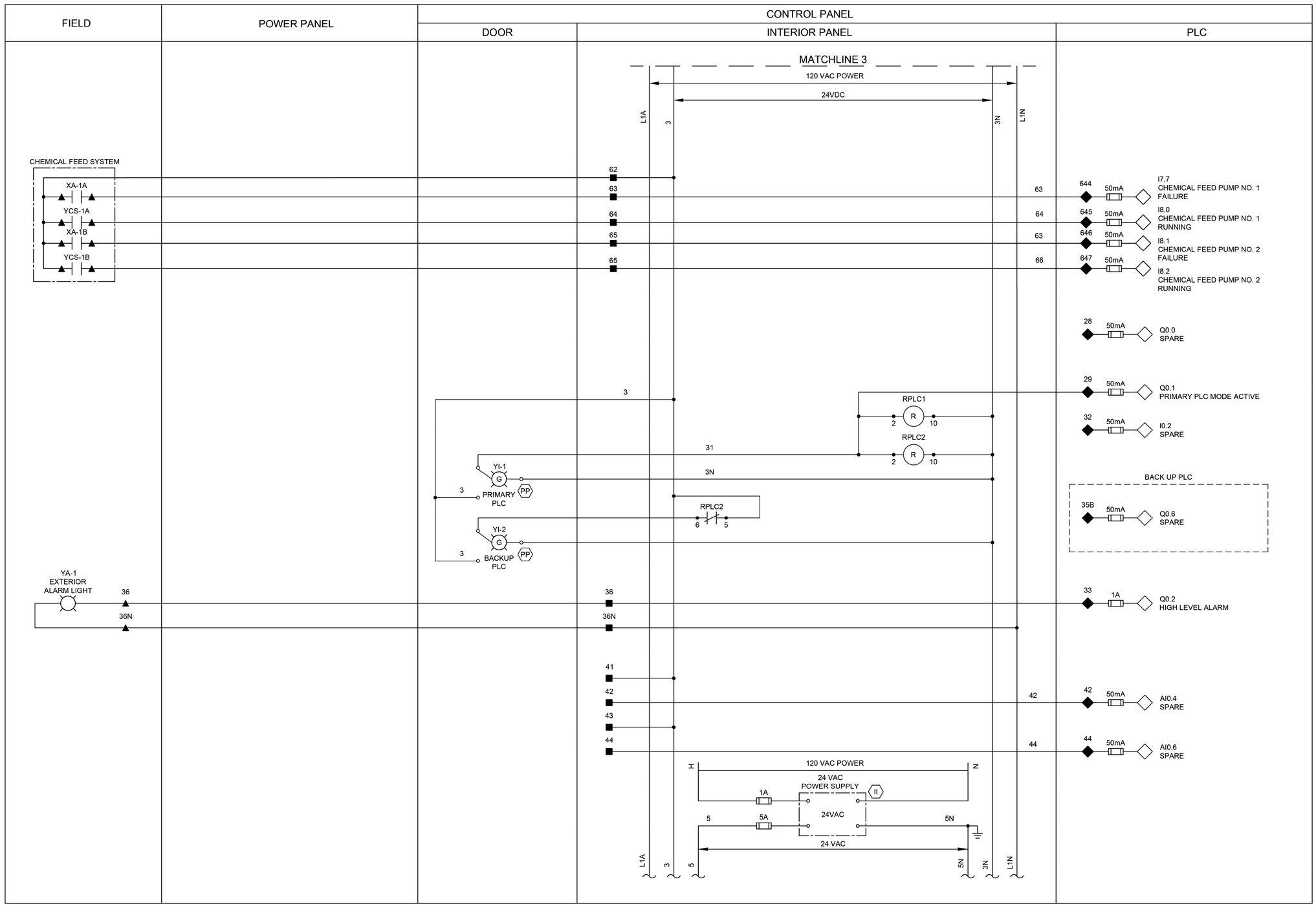

LEGEND

- △ DEVICE OR FIELD TERMINAL LOCATED AT MOTOR
- ✳ DEVICE OR FIELD TERMINAL LOCATED REMOTE
- □ DEVICE OR FIELD TERMINAL LOCATED AT MCC/POWER PANEL
- ■ FIELD TERMINAL LOCATED AT CONTROL PANEL
- ▲ REMOTE TERMINAL
- ● DEVICE TERMINAL NO.
- ◆ PLC INTERFACE TERMINAL

GENERAL NOTES:

1. NO ELECTRICAL MATERIAL, APPARATUS, DEVICES, APPLIANCES, FIXTURES, OR EQUIPMENT SHALL BE SOLD OR INSTALLED IN THE CITY UNLESS THEY ARE IN CONFORMANCE WITH THE PROVISIONS OF SECTION 508 CITY OF HOUSTON ELECTRICAL CODE, THE LAWS OF THE STATE OF TEXAS AND ANY APPLICABLE RULES AND REGULATIONS ISSUED UNDER THE AUTHORITY OF THE STATE STATUES. THE MAKER'S NAME, TRADEMARK, OR OTHER IDENTIFICATION SYMBOL SHALL BE PLACED ON ALL ELECTRICAL MATERIALS, APPARATUS, DEVICES, APPLIANCES, FIXTURES, AND EQUIPMENT USED OR INSTALLED UNDER THE PROVISIONS OF THIS CODE. ALL ELECTRICAL MATERIALS AND EQUIPMENT SHALL BE LISTED AND LABELED FOR THE INTENDED USE AND SHALL BE INCLUDED IN A LIST PUBLISHED BY AN APPROVAL AGENCY.

NO.	DATE	REVISION	APP.

FOR INTERIM REVIEW
ONLY NOT INTENDED FOR
PERMIT, BIDDING OR
CONSTRUCTION PURPOSES.
ENGINEER:
HOSS FOROUZAN
P.E. SERIAL NO.77748
12/15/2025

GAI
Gupta & Associates, Inc.
CONSULTING ENGINEERING
Registration No. F-2593
302 Dennis St.,
Houston, Texas 77006
Tel: 713-636-2936
Fax: 713-636-2987
email: hforouzan@gaiconsulting.com

IDS Engineering Group
13430 NW. Freeway
Suite 700
Houston, Tx. 77040
713.462.3178
TxEng Firm 2726
TxSurv Firm 10110700

CITY OF HOUSTON
HOUSTON PUBLIC WORKS

LIFT STATION RENEWAL
AND REPLACEMENT FY 2023

SOUTHPOINT LIFT STATION
CONTROL PANEL
CONTROL WIRING DIAGRAM–IV

WBS NUMBER	FOR CITY OF HOUSTON USE ONLY
R-000267-0179-4	
DRAWING SCALE	
HORIZ: VERT:	
CITY OF HOUSTON PM	
NAWARAJ PANTA, P.E.	
SHEET NO. 97 OF 321	

DWG. NO. SPT–I–11

IDS JOB No. 0057-085-00

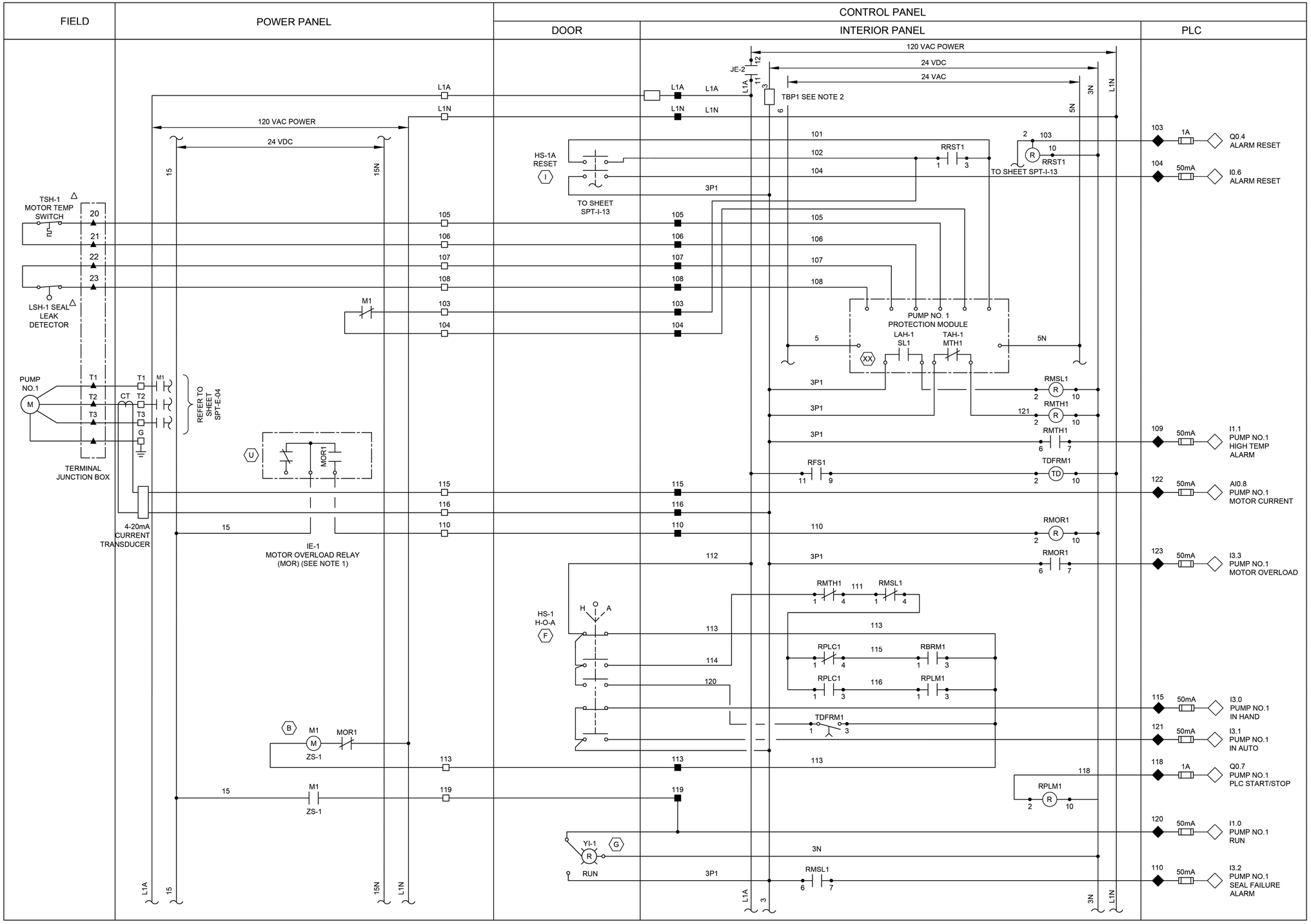

LEGEND

- △ DEVICE OR FIELD TERMINAL LOCATED AT MOTOR
- ✳ DEVICE OR FIELD TERMINAL LOCATED REMOTE
- □ DEVICE OR FIELD TERMINAL LOCATED AT MCC/POWER PANEL
- ■ FIELD TERMINAL LOCATED AT CONTROL PANEL
- ▲ REMOTE TERMINAL
- ● DEVICE TERMINAL NO.
- ◆ PLC INTERFACE TERMINAL

NOTES:

1. MOTOR OVERLOAD RELAY OUTPUT CONTACT SHOWN NORMALLY CLOSED WHEN RELAY IS DE-ENERGIZED, OPEN WHEN ENERGIZED, AND CLOSED WHEN IN ALARM. VERIFY OPERATION OF RELAY PROVIDED AND ADJUST CONNECTION OF RMOR AUXILIARY RELAYS.
2. FUSED TERMINAL ON TERMINAL BLOCK TB4 SEE CONTROL POWER AND COMMUNICATION WIRING DIAGRAM DRAWING NO. SPT-I-3.
3. ALL FLOAT CONTROL CIRCUIT WIRES COLOR SHALL BE YELLOW.

GENERAL NOTES:

1. NO ELECTRICAL MATERIAL, APPARATUS, DEVICES, APPLIANCES, FIXTURES, OR EQUIPMENT SHALL BE SOLD OR INSTALLED IN THE CITY UNLESS THEY ARE IN CONFORMANCE WITH THE PROVISIONS OF SECTION 508 CITY OF HOUSTON ELECTRICAL CODE, THE LAWS OF THE STATE OF TEXAS AND ANY APPLICABLE RULES AND REGULATIONS ISSUED UNDER THE AUTHORITY OF THE STATE STATUES. THE MAKER'S NAME, TRADEMARK, OR OTHER IDENTIFICATION SYMBOL SHALL BE PLACED ON ALL ELECTRICAL MATERIALS, APPARATUS, DEVICES, APPLIANCES, FIXTURES, AND EQUIPMENT USED OR INSTALLED UNDER THE PROVISIONS OF THIS CODE. ALL ELECTRICAL MATERIALS AND EQUIPMENT SHALL BE LISTED AND LABELED FOR THE INTENDED USE AND SHALL BE INCLUDED IN A LIST PUBLISHED BY AN APPROVAL AGENCY.

FOR INTERIM REVIEW ONLY NOT INTENDED FOR PERMIT, BIDDING OR CONSTRUCTION PURPOSES.
ENGINEER:
HOSS FOROUZAN
P.E. SERIAL NO.77748
12/15/2025

GAI
Gupta & Associates, Inc.
CONSULTING ENGINEERING
Registration No. F-2593
302 Dennis St., Houston, Texas 77006
Tel: 713-636-2936
Fax: 713-636-2987
email: hforouzan@gaiconsulting.com

IDS Engineering Group
13430 NW. Freeway
Suite 700
Houston, Tx. 77040
713.462.3178
TxEng Firm 2726
TxSurv Firm 10110700

CITY OF HOUSTON
HOUSTON PUBLIC WORKS

LIFT STATION RENEWAL AND REPLACEMENT FY 2023

SOUTHPOINT LIFT STATION PUMP NO.1 CONTROL WIRING DIAGRAM

WBS NUMBER	FOR CITY OF HOUSTON USE ONLY
R-000267-0179-4	
DRAWING SCALE	
HORIZ: VERT:	
CITY OF HOUSTON PM	
NAWARAJ PANTA, P.E.	
SHEET NO. 98 OF 301	

DWG. NO. SPT–I–12

NO.	DATE	REVISION	APP.

PLOTTED: 12/11/2025 8:09 PM

FILE PATH: O:\H8108_Lift Station Rehabilitation And Reconstruction (IDS)\6 Drawings\Instrumentation And Control\Working\South Point\H8108_SPT-I-12.dwg

IDS JOB No. 0057-085-00

PLOTTED: 12/11/2025 8:09 PM

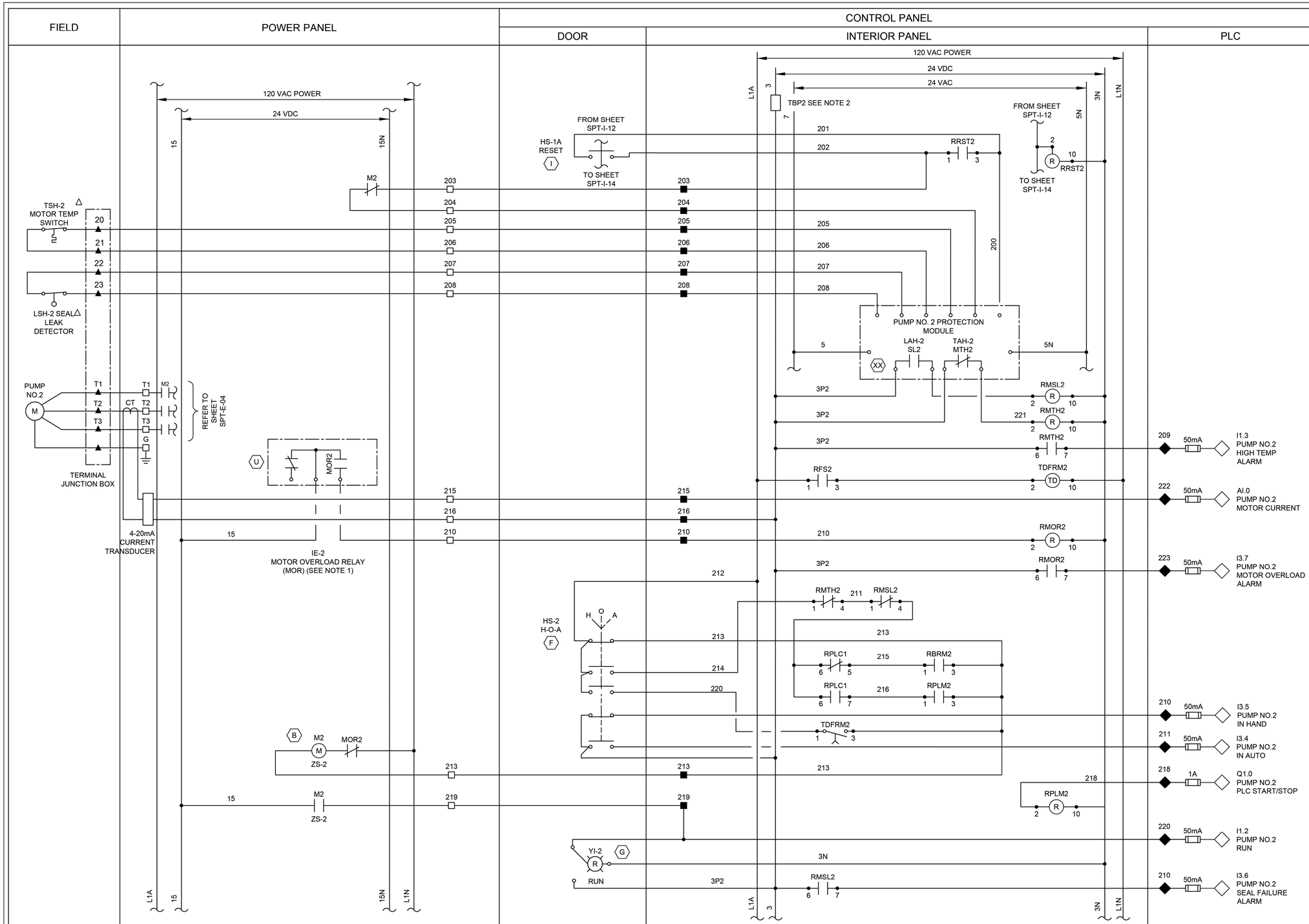

NOTES:

1. MOTOR OVERLOAD RELAY OUTPUT CONTACT SHOWN NORMALLY CLOSED WHEN RELAY IS DE-ENERGIZED, OPEN WHEN ENERGIZED, AND CLOSED WHEN IN ALARM. VERIFY OPERATION OF RELAY PROVIDED AND ADJUST CONNECTION OF RMOR AUXILIARY RELAYS.
2. FUSED TERMINAL ON TERMINAL BLOCK TB4 SEE CONTROL POWER AND COMMUNICATION WIRING DIAGRAM DRAWING NO. SPT-I-3.
3. ALL FLOAT CONTROL CIRCUIT WIRES COLOR SHALL BE YELLOW.

GENERAL NOTES:

1. NO ELECTRICAL MATERIAL, APPARATUS, DEVICES, APPLIANCES, FIXTURES, OR EQUIPMENT SHALL BE SOLD OR INSTALLED IN THE CITY UNLESS THEY ARE IN CONFORMANCE WITH THE PROVISIONS OF SECTION 508 CITY OF HOUSTON ELECTRICAL CODE, THE LAWS OF THE STATE OF TEXAS AND ANY APPLICABLE RULES AND REGULATIONS ISSUED UNDER THE AUTHORITY OF THE STATE STATUES. THE MAKER'S NAME, TRADEMARK, OR OTHER IDENTIFICATION SYMBOL SHALL BE PLACED ON ALL ELECTRICAL MATERIALS, APPARATUS, DEVICES, APPLIANCES, FIXTURES, AND EQUIPMENT USED OR INSTALLED UNDER THE PROVISIONS OF THIS CODE. ALL ELECTRICAL MATERIALS AND EQUIPMENT SHALL BE LISTED AND LABELED FOR THE INTENDED USE AND SHALL BE INCLUDED IN A LIST PUBLISHED BY AN APPROVAL AGENCY.

LEGEND

- △ DEVICE OR FIELD TERMINAL LOCATED AT MOTOR
- ✳ DEVICE OR FIELD TERMINAL LOCATED REMOTE
- □ DEVICE OR FIELD TERMINAL LOCATED AT MCC/POWER PANEL
- ■ FIELD TERMINAL LOCATED AT CONTROL PANEL
- ▲ REMOTE TERMINAL
- ● DEVICE TERMINAL NO.
- ◆ PLC INTERFACE TERMINAL

FOR INTERIM REVIEW
ONLY NOT INTENDED FOR
PERMIT, BIDDING OR
CONSTRUCTION PURPOSES.
ENGINEER:
HOSS FOROUZAN
P.E. SERIAL NO.77748
12/15/2025

GAI
Gupta & Associates, Inc.
CONSULTING ENGINEERING
Registration No. F-2593
302 Dennis St.,
Houston, Texas 77006
Tel: 713-636-2936
Fax: 713-636-2987
email: hforouzan@gaiconsulting.com

IDS Engineering Group
13430 NW. Freeway
Suite 700
Houston, Tx. 77040
713.462.3178
TxEng Firm 2726
TxSurv Firm 10110700

CITY OF HOUSTON
HOUSTON PUBLIC WORKS

LIFT STATION RENEWAL AND REPLACEMENT FY 2023

SOUTHPOINT LIFT STATION PUMP NO.2 CONTROL WIRING DIAGRAM

WBS NUMBER	FOR CITY OF HOUSTON USE ONLY
R-000267-0179-4	
DRAWING SCALE	
HORIZ: VERT:	
CITY OF HOUSTON PM	
NAWARAJ PANTA, P.E.	
DWG. NO. SP-I-13	SHEET NO. 99 OF XXX

NO.	DATE	REVISION	APP.

IDS JOB No. 0057-085-00

FILE PATH: O:\H8108_Lift Station Rehabilitation And Reconstruction (IDS)\6 Drawings\Instrumentation And Control\Working\South Point\H8108_SPT-I-13.dwg

PLOTTED: 12/11/2025 8:10 PM

FILE PATH: O:\H8108_Lift Station Rehabilitation And Reconstruction (IDS)\6 Drawings\Instrumentation And Control\Working\South Point\H8108_SPT-I-14.dwg

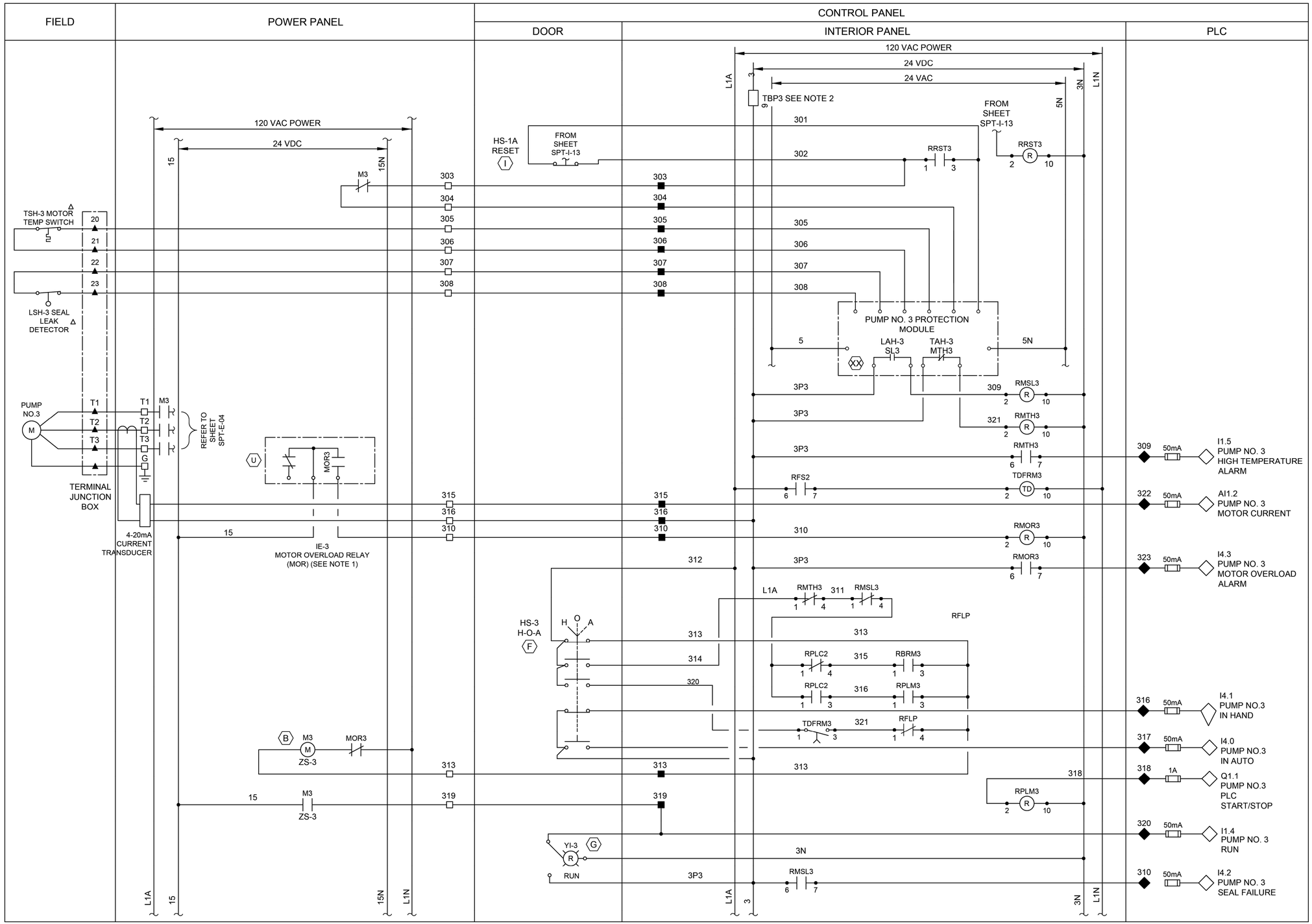

LEGEND

- △ DEVICE OR FIELD TERMINAL LOCATED AT MOTOR
- ✳ DEVICE OR FIELD TERMINAL LOCATED REMOTE
- □ DEVICE OR FIELD TERMINAL LOCATED AT MCC/POWER PANEL
- ■ FIELD TERMINAL LOCATED AT CONTROL PANEL
- ▲ REMOTE TERMINAL
- ● DEVICE TERMINAL NO.
- ◆ PLC INTERFACE TERMINAL

NOTES:

1. MOTOR OVERLOAD RELAY OUTPUT CONTACT SHOWN NORMALLY CLOSED WHEN RELAY IS DE-ENERGIZED, OPEN WHEN ENERGIZED, AND CLOSED WHEN IN ALARM. VERIFY OPERATION OF RELAY PROVIDED AND ADJUST CONNECTION OF RMOR AUXILIARY RELAYS.
2. FUSED TERMINAL ON TERMINAL BLOCK TB4 SEE CONTROL POWER AND COMMUNICATION WIRING DIAGRAM DRAWING NO. SPT-I-3.
3. ALL FLOAT CONTROL CIRCUIT WIRES COLOR SHALL BE YELLOW.

GENERAL NOTES:

1. NO ELECTRICAL MATERIAL, APPARATUS, DEVICES, APPLIANCES, FIXTURES, OR EQUIPMENT SHALL BE SOLD OR INSTALLED IN THE CITY UNLESS THEY ARE IN CONFORMANCE WITH THE PROVISIONS OF SECTION 508 CITY OF HOUSTON ELECTRICAL CODE, THE LAWS OF THE STATE OF TEXAS AND ANY APPLICABLE RULES AND REGULATIONS ISSUED UNDER THE AUTHORITY OF THE STATE STATUES. THE MAKER'S NAME, TRADEMARK, OR OTHER IDENTIFICATION SYMBOL SHALL BE PLACED ON ALL ELECTRICAL MATERIALS, APPARATUS, DEVICES, APPLIANCES, FIXTURES, AND EQUIPMENT USED OR INSTALLED UNDER THE PROVISIONS OF THIS CODE. ALL ELECTRICAL MATERIALS AND EQUIPMENT SHALL BE LISTED AND LABELED FOR THE INTENDED USE AND SHALL BE INCLUDED IN A LIST PUBLISHED BY AN APPROVAL AGENCY.

NO.	DATE	REVISION	APP.

FOR INTERIM REVIEW
ONLY NOT INTENDED FOR
PERMIT, BIDDING OR
CONSTRUCTION PURPOSES.
ENGINEER:
HOSS FOROUZAN
P.E. SERIAL NO.77748
12/15/2025

GAI
Gupta & Associates, Inc.
CONSULTING ENGINEERING
Registration No. F-2593
302 Dennis St.,
Houston, Texas 77006
Tel: 713-636-2936
Fax: 713-636-2987
email: hforouzan@gaiconsulting.com

IDS Engineering Group
13430 NW. Freeway
Suite 700
Houston, Tx. 77040
713.462.3178
TxEng Firm 2726
TxSurv Firm 10110700

CITY OF HOUSTON
HOUSTON PUBLIC WORKS

LIFT STATION RENEWAL
AND REPLACEMENT FY 2023

SOUTHPOINT LIFT STATION PUMP NO.3 CONTROL WIRING DIAGRAM

WBS NUMBER	FOR CITY OF HOUSTON USE ONLY
R-000267-0179-4	
DRAWING SCALE	
HORIZ: VERT:	
CITY OF HOUSTON PM	
NAWARAJ PANTA, P.E.	

DWG. NO.	SHEET NO. 100 OF XXX
SPT-I-14	

IDS JOB No. 0057-085-00

PLOTTED: 12/17/2025 9:57 AM

LEGEND

- EXISTING CONCRETE PAVEMENT
- REMOVE EXISTING CONCRETE PAVEMENT
- SITE DEMOLITION
- EXISTING CONCRETE SIDEWALK
- REMOVE EXISTING CONCRETE SIDEWALK
- ABANDON VALVE VAULT (SEE SHEET XX)
- ABANDON ANY UNDERGROUND UTILITY
- REMOVE ANY UNDERGROUND UTILITY
- REMOVE EXISTING FENCE
- FILTER FABRIC FENCE

NOTES:

1. EXISTING LIFT STATION WET WELL TO REMAIN.
2. SEE ELECTRICAL PLANS ON SHEETS SCT-E-01-SCT-I-18 FOR ELECTRICAL IMPROVEMENTS.
3. CONTRACTOR SHALL COORDINATE WITH CENTERPOINT ENERGY TO DE-ENERGIZE THE LIFT STATION AND OTHER ELECTRICAL EQUIPMENT ON SITE.
4. CONTRACTOR SHALL PROTECT THE EXISTING CONDUIT AND CABLE. IF CABLE OR CONDUIT IS DAMAGED CONTRACTOR SHALL REPLACE AT NO ADDITIONAL COST TO THE CITY.
5. REMOVE DAMAGED AND CRACKED SIDEWALK.
6. REMOVE THE EXISTING FORCE MAIN TO THE NEAREST PIPE JOINT AND TIE PROP FORCE MAIN TO EXIST. USE RESTRAINED JOINTS.
7. THE EXISTING FORCE MAIN IS ASSUMED TO BE DUCTILE IRON BELL AND SPIGOT AND SHALL BE FIELD VERIFIED BY THE CONTRACTOR.

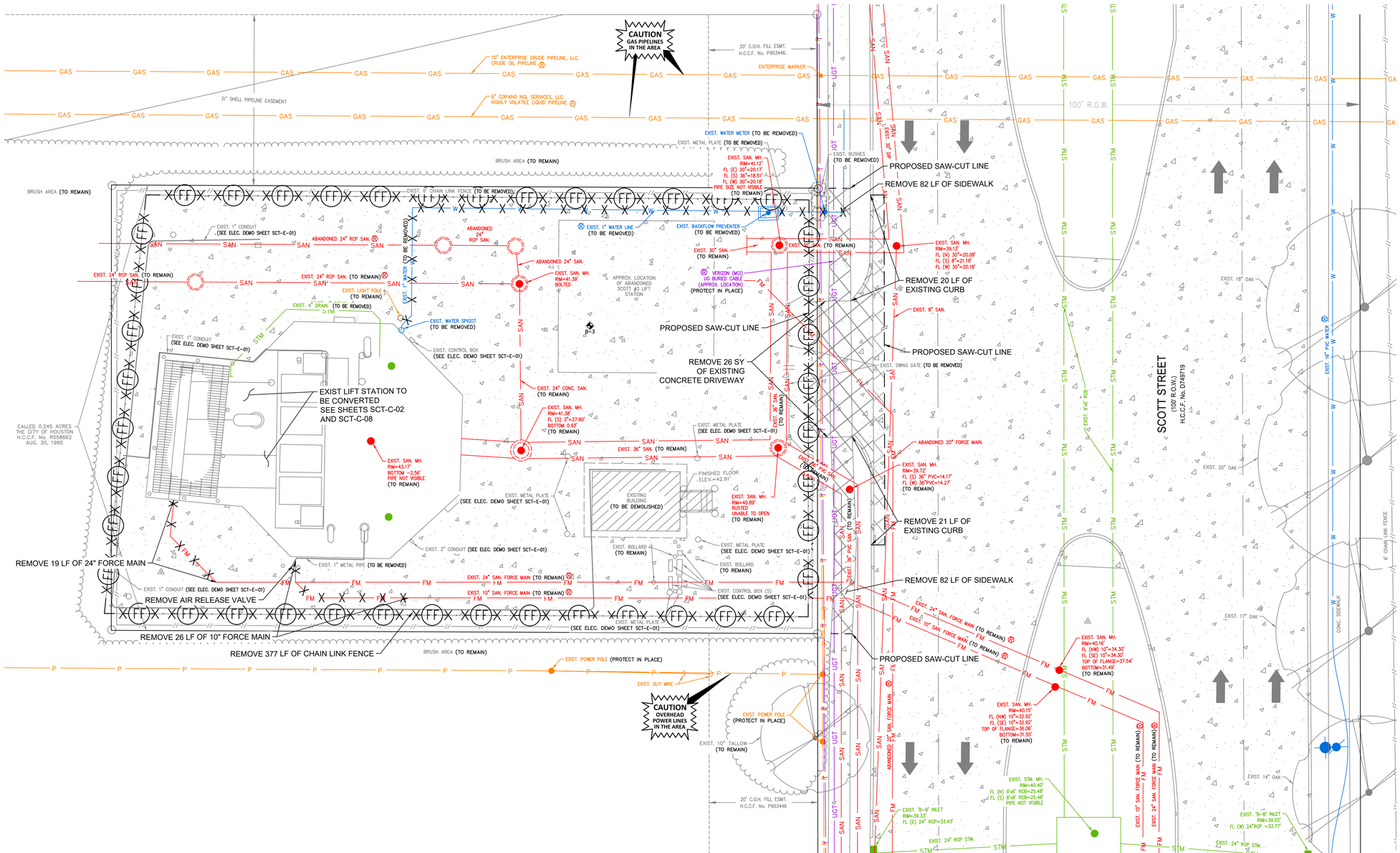

10' 0' 10'
SCALE
1" = 10'

N W E S

BENCHMARK:

FLOODPLAIN REFERENCE MARK NUMBER 030070 IS A BRASS DISC IN CONCRETE STAMPED 030070 LOCATED ON NORTHEAST CORNER ON AIRPORT BLVD BRIDGE OVER SIMS BAYOU APPROXIMATELY 0.1 MILES EAST FROM THE INTERSECTION OF SCOTT STREET IN KEY MAP NO. 573G IN THE SIMS BAYOU WATERSHED.

ELEV. 43.59 FEET NAVD 1988, 2001 ADJUSTMENT

FLOODPLAIN NOTE:

FLOODPLAIN REFERENCE MARK NUMBER 030070 IS A BRASS DISC IN CONCRETE STAMPED 030070 LOCATED ON NORTH SIDEWALK ON AIRPORT BLVD BRIDGE OVER SIMS BAYOU APPROX. 0.1 MILE WEST FROM THE INTERSECTION OF SCOTT ST IN KEY MAP NO. 573G IN THE SIMS BAYOU WATERSHED

ELEV. 43.59 FEET NAVD 1988, 2001 ADJUSTMENT
100-YR ELEV. 38.00'
500-YR ELEV. 42.00'
FIRM PANEL: 48201C0890M

T.B.M #41:

SET 5/8" I.R. W/CAP LOCATED ON MEDIAN NOSE ON SCOTT ST. APPROX. 400 FT NORTH FROM THE INTERSECTION OF S. ACRES DR

ELEV.= 39.76 FT.

EXISTING UTILITY NOTE:

EXISTING UNDERGROUND UTILITY INFORMATION (TYPE, SIZE & OWNERSHIP) ARE SHOWN APPROXIMATELY BASED ON THE AVAILABLE RECORD DRAWINGS AND FIELD VERIFICATION (WHERE FEASIBLE) WITHOUT PROBING AND EXCAVATION. NO WARRANTY IS MADE AS TO THE ACCURACY OR COMPLETENESS OF UTILITY LOCATION SHOWN ON THE DRAWING. CAUTION SHOULD BE EXERCISED WHEN EXCAVATING OR BORE AND JACKING IN THE VICINITY OF UNDERGROUND UTILITIES. OWNERS OF THE UTILITIES SHOULD BE NOTIFIED PRIOR TO SUCH ACTIVITIES. CALL UTILITY COORDINATING COMMITTEE AT 713-223-4567, AT LEAST 48 HOURS PRIOR TO EXCAVATING IN THE STREET RIGHT-OF-WAY.

NO.	DATE	REVISION	APP.

NOTICE:
FOR YOUR SAFETY, YOU ARE REQUIRED BY TEXAS LAW TO CALL 811 AT LEAST 48 HOURS BEFORE YOU DIG SO THAT UNDERGROUND LINES CAN BE MARKED. THIS SIGNATURE DOES NOT FULFILL YOUR OBLIGATION TO CALL 811

VERIFICATION OF PRIVATE UTILITY LINES

Date

CenterPoint Energy natural gas utilities shown. (Gas service lines are not shown). This signature not be used for conflict verification.

Signature valid for six months.

Date

CenterPoint Energy/UNDERGROUND Electrical Facilities Verification ONLY. (This signature verifies existing underground facilities – not to be used for conflict verification)

Signature valid for six months.

Date

Approved for AT&T underground conduit facilities only.
Signature valid for one year.

IDS Engineering Group
13430 NW. Freeway, Suite 700
Houston, Tx. 77040
713.462.3178
TxEng Firm 2726 | TxSurv Firm 10110700

THIS DOCUMENT IS RELEASED FOR THE PURPOSE OF REVIEW UNDER THE AUTHORITY OF MARCEL KHOUW, P.E. 101807 ON 12/17/2025. IT IS NOT TO BE USED FOR CONSTRUCTION PURPOSES.

SURVEYED BY: KUO & ASSOCIATES, INC.
TBPE FIRM #F-4578; TBPLS FIRM #1007560

CITY OF HOUSTON
HOUSTON PUBLIC WORKS

LIFT STATION RENEWAL AND REPLACEMENT FY 2023

SCOTT #3 LIFT STATION SITE DEMOLITION PLAN AND SWPPP

WBS NUMBER	FOR CITY OF HOUSTON USE ONLY
R-000267-0179-4	
DRAWING SCALE	
HORIZ: 1" = 10' VERT: N/A	
CITY OF HOUSTON PM	
NAWARAJ PANTA, P.E.	
DWG. NO. SCT-C-01	SHEET NO. 101 OF 321

FILE PATH: \\idseg.com\FS\Projects\0000\005708500 CoH Lift Stations - FY 2023\CAD\DWG\PRODUCTION\101-SCOTT No 3 SITE PLAN AND DEMO.dwg

PLOTTED: 12/17/2025 8:09 AM

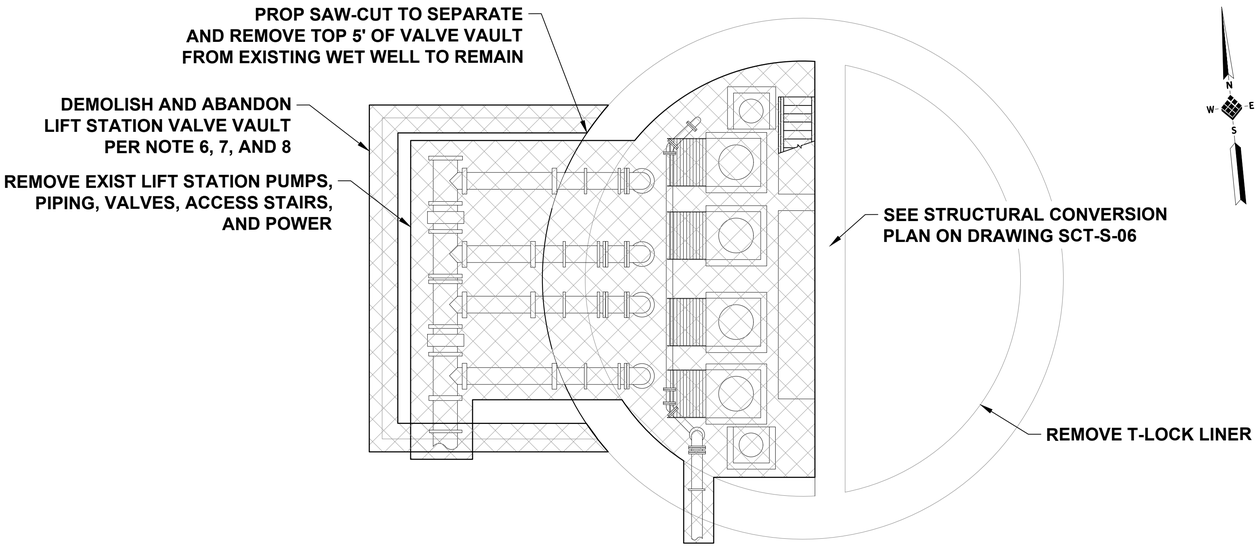

LIFT STATION PLAN

N.T.S.

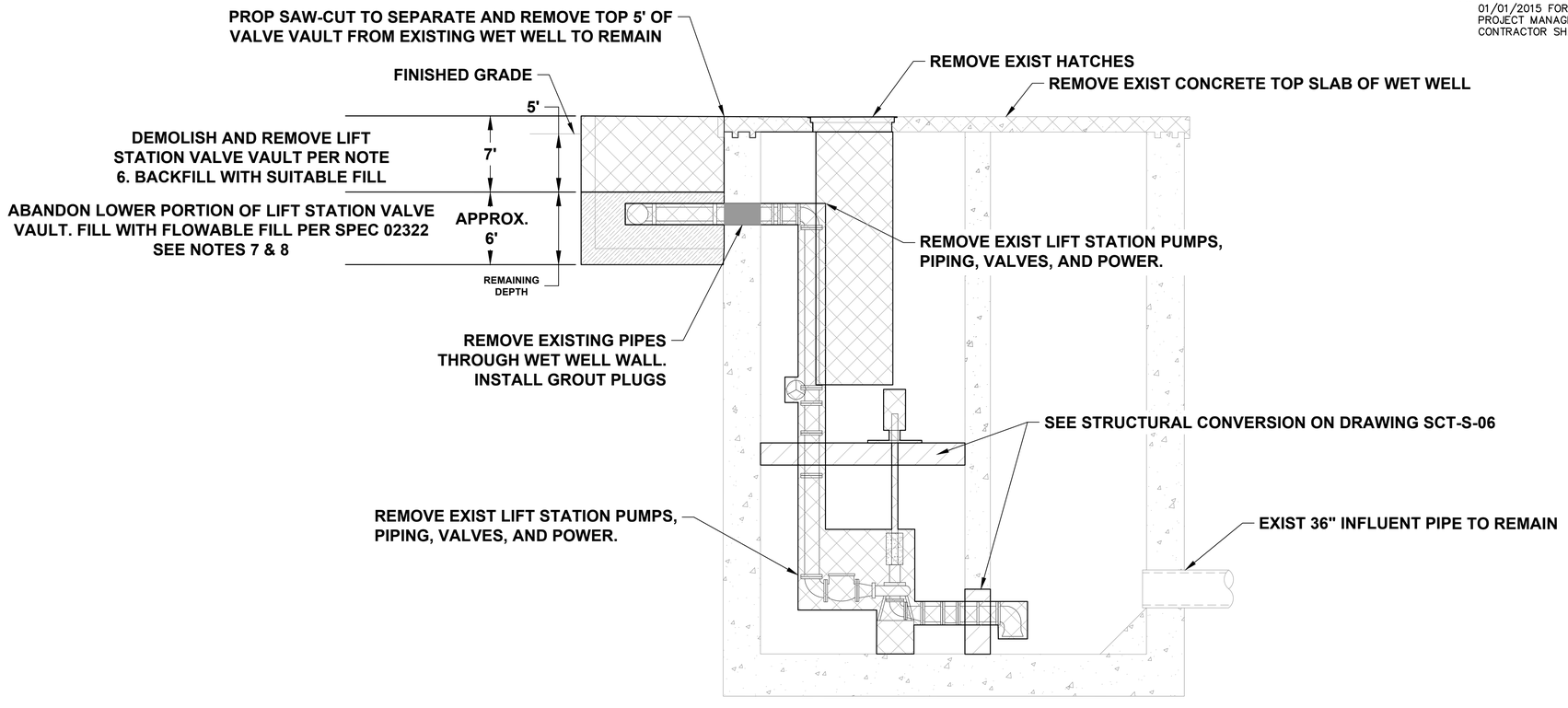

LIFT STATION SECTION

N.T.S.

LIFT STATION DEMOLITION AND ABANDONMENT NOTES:

1. THIS DRAWING IS A REPRODUCTION OF THE EXISTING LIFT STATION CONSTRUCTION DRAWINGS AND INTENDED TO PROVIDE GENERAL INFORMATION FOR STATION DEMOLITION. THE CONTRACTOR IS RESPONSIBLE FOR DETERMINING THE ACTUAL WORK REQUIRED FOR DEMOLITION AND REMOVAL OF STRUCTURAL MECHANICAL AND ELECTRICAL COMPONENTS. A CLAIM FOR CHANGED CONDITIONS BETWEEN THE EXISTING CONDITIONS AND THE RECORD DRAWINGS WILL NOT BE CONSIDERED.
2. NO DEMOLITION IS TO BE PERFORMED UNTIL BYPASS PUMPING HAS BEEN INSTALLED AND OPERATIONAL.
3. THE CITY OF HOUSTON WILL RETAIN SALVAGE RIGHTS TO ALL MATERIAL AND EQUIPMENT. ALL MATERIALS AND EQUIPMENT RETAINED BY THE CITY OF HOUSTON SHALL BE DELIVERED TO A POINT DESIGNATED BY CITY OF HOUSTON REPRESENTATIVE (MR. ARTURO CARRILLO 832-395-3558). ANY MATERIAL OR EQUIPMENT NOT RETAINED BY THE CITY OF HOUSTON SHALL BE REMOVED FROM THE SITE AND DISPOSED OF BY THE CONTRACTOR IN ACCORDANCE WITH APPLICABLE REGULATIONS.
4. WHEN REMOVING EXISTING PUMPS, CONTRACTOR SHALL LEAVE AS MUCH WIRE/CABLE AS POSSIBLE IN ORDER FOR THE CITY TO REUSE THE PUMPS.
5. CONTRACTOR SHALL NOTIFY TEXAS DEPARTMENT OF HEALTH (DEPARTMENT) ON A FORM SPECIFIED BY THE DEPARTMENT OF ANY ASBESTOS ABATEMENT ACTIVITY, RENOVATION OR OPERATIONS AND MAINTENANCE ACTIVITY AFFECTING ASBESTOS-CONTAINING BUILDING MATERIALS, OR ANY DEMOLITION IN FACILITIES OR PUBLIC BUILDINGS.
6. CONCRETE SLAB AND WALLS INDICATED ON THIS PLAN SHALL BE REMOVED TO 5 FEET BELOW FINISHED GRADE AS PER SPECIFICATION SECTION 02220.
7. ALL REMAINING WALL OPENINGS IN THE VALVE VAULT SHALL BE SEALED WITH NON-SHRINK GROUT.
8. CONTRACTOR SHALL BACKFILL THE ABANDONED AND DEMOLISHED VALVE VAULT. BACKFILL SHALL BE FLOWABLE FILL AND COMPACTED PROPERLY UP TO THE PROPOSED CONCRETE DISCHARGE ASSEMBLY PAD.
9. THE CONTRACTOR SHALL COORDINATE WITH CENTERPOINT ENERGY TO TEMPORARILY DISCONNECT ELECTRICAL POWER AS NEEDED.
10. THE EXISTING WET WELL SHALL BE CLEANED OF ALL DEBRIS, WASTEWATER AND OTHER RESIDUES BY AN APPROVED CITY OF HOUSTON DISPOSAL CONTRACTOR.
11. THE CONTRACTOR SHALL DISPOSE OF ANY LIQUID OR SOLID WASTE FOUND IN THE WET WELL AT A DISPOSAL FACILITY LICENSED AND APPROVED BY THE STATE OF TEXAS. THE CONTRACTOR SHALL BE RESPONSIBLE FOR THE COST OF TRANSPORTATION, DISPOSAL AND TESTING REQUIRED BY STATE AND FEDERAL REGULATORY AGENCIES, AND BY THE DISPOSAL FACILITY.
12. PRIOR TO THE CLEAN-OUT AND CLEANING OF THE EXISTING LIFT STATION WET WELL, CONTRACTOR TO SUBMIT PROOF TO C.O.H. CONSTRUCTION PM THAT TRANSPORTER/HAULER TO BE USED FOR THE TRANSPORT OF THE CONTENTS OF THE WET WELL (I.E., SOLIDS, GRIT, SEWAGE SLUDGE, AND DOMESTIC SLUDGE, ETC.) IS REGISTERED BY THE TEXAS COMMISSION ON ENVIRONMENTAL QUALITY (TCEQ) AS A SLUDGE TRANSPORTER AND THE TRANSPORTER'S REGISTRATION IS CURRENT AND VALID DURING THE PERIOD OF PERFORMANCE.
13. CONTRACTOR SHALL SUBMIT PROOF OF SUBMISSION OF REQUIRED ASBESTOS/DEMOLITION NOTIFICATION FORM TO THE TEXAS DEPARTMENT OF STATE HEALTH SERVICES TO C.O.H. CONSTRUCTION PM. THE NOTIFICATION TO THE STATE MUST BE PROVIDED A MINIMUM OF 10 DAYS PRIOR TO THE STARTUP OF ANY DEMOLITION ACTIVITIES AT THE SITE.
14. CONTRACTOR SHALL OBTAIN CITY OF HOUSTON DEMOLITION PERMIT (SEE FORM CE 1075 REV. 01/01/2015 FOR GUIDELINES) OR SUBMIT PROOF OF NON-APPLICABILITY TO C.O.H. CONSTRUCTION PROJECT MANAGER PRIOR TO THE STARTUP OF DEMOLITION ACTIVITIES AT THE SITE. THE CONTRACTOR SHALL OBTAIN ANY STATE DEMOLITION PERMITS REQUIRED.

NO.	DATE	REVISION	APP.

LEGEND

DEMOLITION AREA

ABANDON VALVE VAULT

IDS Engineering Group
13430 NW. Freeway, Suite 700
Houston, Tx. 77040
713.462.3178
TxEng Firm 2726 | TxSurv Firm 10110700

SURVEYED BY: KUO & ASSOCIATES, INC.
TBPE FIRM #F-4578; TBPLS FIRM #1007560

THIS DOCUMENT IS RELEASED FOR THE PURPOSE OF REVIEW UNDER THE AUTHORITY OF MARCEL KHOUW, P.E. 101807 ON 12/17/2025. IT IS NOT TO BE USED FOR CONSTRUCTION PURPOSES.

CITY OF HOUSTON
HOUSTON PUBLIC WORKS

LIFT STATION RENEWAL AND REPLACEMENT FY 2023

SCOTT #3 LIFT STATION SECTION DEMOLITION

WBS NUMBER	FOR CITY OF HOUSTON USE ONLY
R-000267-0179-4	
DRAWING SCALE	
HORIZ: AS NOTED VERT: N/A	
CITY OF HOUSTON PM	
NAWARAJ PANTA, P.E.	
SHEET NO. 102 OF 321	

DWG. NO. SCT-C-02

FILE PATH: \\idseg.com\FS\Projects\0000\005708500 CoH Lift Stations - FY 2023\CAD\DWG\PRODUCTION\102-SCOTT No 3 SECTION DEMO.dwg

PLOTTED: 12/17/2025 10:00 AM

NOTES:

1. EXISTING LIFT STATION WET WELL TO REMAIN.
2. SEE ELECTRICAL PLANS ON SHEETS SCT-E-01-SCT-I-18 FOR ELECTRICAL IMPROVEMENTS.
3. CONTRACTOR SHALL COORDINATE WITH CENTERPOINT ENERGY TO DE-ENERGIZE THE LIFT STATION AND OTHER ELECTRICAL EQUIPMENT ON SITE.
4. REMOVE EXISTING T-LOCK LINER, REPAIR MANHOLE WALL AND RESTORE BENCH PER SPEC 02555. REPLACE MANHOLE FRAME, RING, AND COVER, AND RECOAT WITHA COH APPROVED MATERIAL PER SPEC 09901.
5. DOWEL INTO EXISTING PAVEMENT. USE 24" x #4 SMOOTH DOWELS AT 18" CENTER TO CENTER, CENTERED ON SAWCUT.
6. SANITARY SEWER MANHOLES INSTALLED BELOW THE FLOODPLAIN ELEVATION SHALL HAVE WATERTIGHT MANHOLE FRAMES AND COVERS AS PER SPECIFICATION 02090.
7. CONTRACTOR SHALL FIELD VERIFY THE LOCATION OF THE HOLES DRILLED FOR THE RISER PIPE INSTALLATION THRU THE WET VAULT TOP SLAB.
8. REMOVE THE EXISTING FORCE MAIN TO THE NEAREST PIPE JOINT AND TIE PROP FORCE MAIN TO EXIST. USE RESTRAINED JOINTS.
9. THE EXISTING FORCE MAIN IS ASSUMED TO BE DUCTILE IRON BELL AND SPIGOT AND SHALL BE FIELD VERIFIED BY THE CONTRACTOR.
10. CONTRACTOR TO PROTECT EXISTING CONDUIT AND CABLE. IF CABLE OR CONDUIT IS DAMAGED DURING CONSTRUCTION, CONTRACTOR SHALL REPLACE AT NO ADDITIONAL COST TO THE CITY.
11. YARD LIGHT POLES, ELECTRICAL & COMMUNICATION POLES, AND SERVICE POLES SHALL BE ABLE TO WITHSTAND ULTIMATE DESIGN WIND SPEED OF 130 MPH, V(ULT).
12. COAT MANHOLE IN ACCORDANCE WITH SYSTEM 108 PER SPEC SECTION 09901 PART 2.03J.
13. CONTRACTOR TO SAWCUT, REMOVE, AND REPLACE CONCRETE AS NECESSARY. NO SEPARATE PAY.
14. SAWCUT AND REMOVE CONCRETE PAVEMENT AND INSTALL FOUNDATION AS SHOWN ON STRUCTURAL DRAWINGS SCT-S-07 AND SCT-S-08.

PROPOSED POINT TABLE

POINT	NORTHING	EASTING	DESCRIPTION	ELEVATION
1	13801108.29	3122166.80	PROP. TIE-IN TO EXIST. FORCE MAIN	38.5' (NFV)
2	13801109.71	3122165.22	PROP. 10" 45° BEND	38.5' (NFV)
3	13801109.28	3122129.15	PROP. TIE-IN TO EXIST. FORCE MAIN	34.7' (NFV)
4	13801109.02	3122124.01	PROP. 24" 45° BEND	34.7' (NFV)

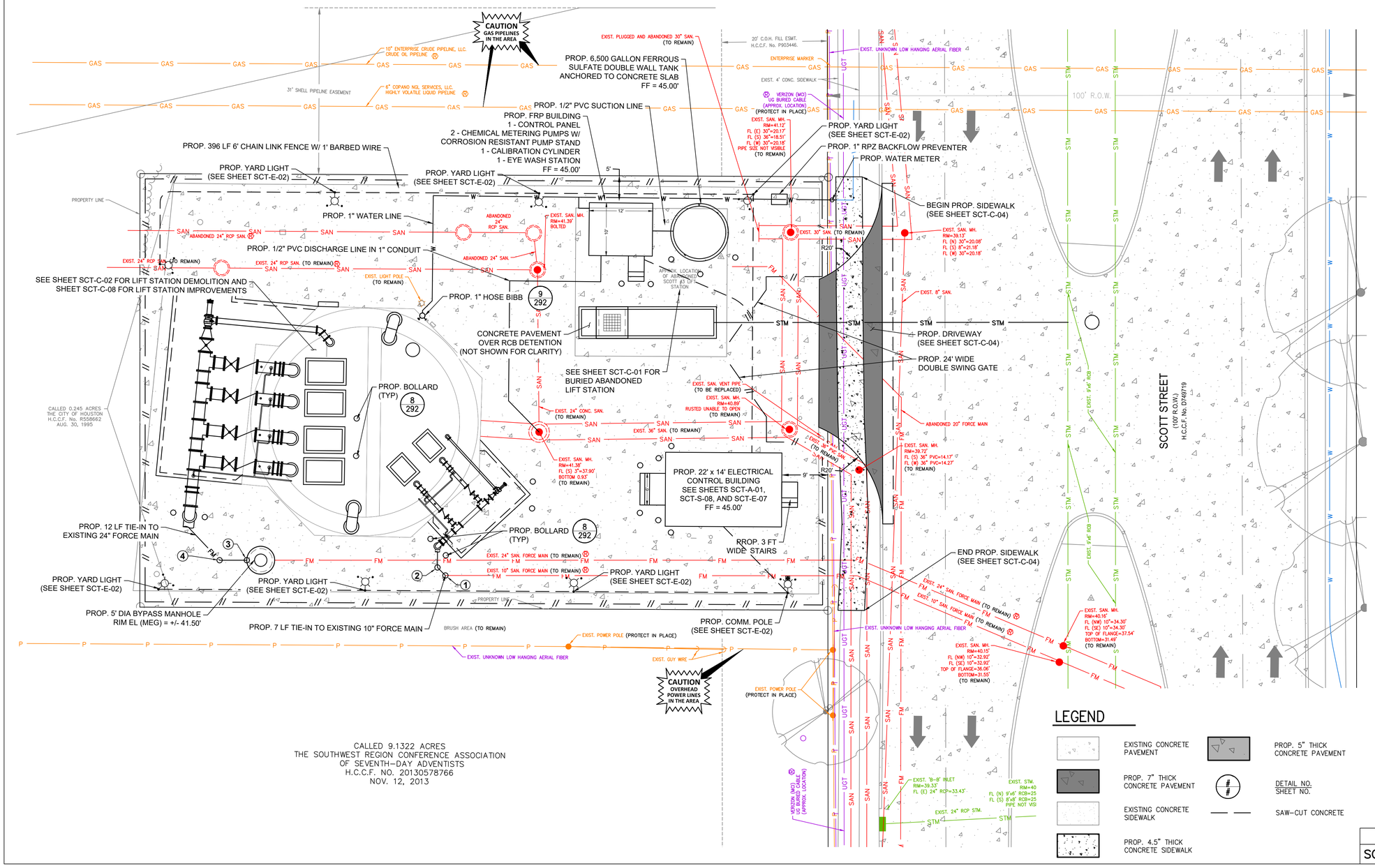

LEGEND

- EXISTING CONCRETE PAVEMENT
- PROP. 7" THICK CONCRETE PAVEMENT
- EXISTING CONCRETE SIDEWALK
- PROP. 4.5" THICK CONCRETE SIDEWALK
- PROP. 5" THICK CONCRETE PAVEMENT
- DETAIL NO. SHEET NO.
- SAW-CUT CONCRETE

10' 0' 10'
SCALE
1"=10'

N W E S

BENCHMARK:

FLOODPLAIN REFERENCE MARK NUMBER 030070 IS A BRASS DISC IN CONCRETE STAMPED 030070 LOCATED ON NORTHEAST CORNER ON AIRPORT BLVD BRIDGE OVER SIMS BAYOU APPROXIMATELY 0.1 MILES EAST FROM THE INTERSECTION OF SCOTT STREET IN KEY MAP NO. 573G IN THE SIMS BAYOU WATERSHED.

ELEV. 43.59 FEET NAVD 1988, 2001 ADJUSTMENT

FLOODPLAIN NOTE:

FLOODPLAIN REFERENCE MARK NUMBER 030070 IS A BRASS DISC IN CONCRETE STAMPED 030070 LOCATED ON NORTH SIDEWALK ON AIRPORT BLVD BRIDGE OVER SIMS BAYOU APPROX. 0.1 MILE WEST FROM THE INTERSECTION OF SCOTT ST IN KEY MAP NO. 573G IN THE SIMS BAYOU WATERSHED

ELEV. 43.59 FEET NAVD 1988, 2001 ADJUSTMENT
100-YR ELEV. 38.00'
500-YR ELEV. 42.00'
FIRM PANEL: 48201C0890M

T.B.M #41:

SET 5/8" I.R. W/CAP LOCATED ON MEDIAN NOSE ON SCOTT ST. APPROX. 400 FT NORTH FROM THE INTERSECTION OF S. ACRES DR

ELEV.= 39.76 FT.

EXISTING UTILITY NOTE:

EXISTING UNDERGROUND UTILITY INFORMATION (TYPE, SIZE & OWNERSHIP) ARE SHOWN APPROXIMATELY BASED ON THE AVAILABLE RECORD DRAWINGS AND FIELD VERIFICATION (WHERE FEASIBLE) WITHOUT PROBING AND EXCAVATION. NO WARRANTY IS MADE AS TO THE ACCURACY OR COMPLETENESS OF UTILITY LOCATION SHOWN ON THE DRAWING. CAUTION SHOULD BE EXERCISED WHEN EXCAVATING OR BORE AND JACKING IN THE VICINITY OF UNDERGROUND UTILITIES. OWNERS OF THE UTILITIES SHOULD BE NOTIFIED PRIOR TO SUCH ACTIVITIES. CALL UTILITY COORDINATING COMMITTEE AT 713-223-4567, AT LEAST 48 HOURS PRIOR TO EXCAVATING IN THE STREET RIGHT-OF-WAY.

NOTICE:
FOR YOUR SAFETY, YOU ARE REQUIRED BY TEXAS LAW TO CALL 811 AT LEAST 48 HOURS BEFORE YOU DIG SO THAT UNDERGROUND LINES CAN BE MARKED. THIS SIGNATURE DOES NOT FULFILL YOUR OBLIGATION TO CALL 811

VERIFICATION OF PRIVATE UTILITY LINES

Date

CenterPoint Energy natural gas utilities shown. (Gas service lines are not shown). This signature not be used for conflict verification.

Signature valid for six months.

Date

CenterPoint Energy/UNDERGROUND Electrical Facilities Verification ONLY. (This signature verifies existing underground facilities – not to be used for conflict verification)

Signature valid for six months.

Date

Approved for AT&T underground conduit facilities only.
Signature valid for one year.

NO.	DATE	REVISION	APP.

IDS Engineering Group
13430 NW. Freeway, Suite 700
Houston, Tx. 77040
713.462.3178
TxEng Firm 2726 | TxSurv Firm 10110700

THIS DOCUMENT IS RELEASED FOR THE PURPOSE OF REVIEW UNDER THE AUTHORITY OF MARCEL KHOUW, P.E. 101807 ON 12/17/2025. IT IS NOT TO BE USED FOR CONSTRUCTION PURPOSES.

SURVEYED BY: KUO & ASSOCIATES, INC.
TBPE FIRM #F-4578; TBPLS FIRM #1007560

CITY OF HOUSTON
HOUSTON PUBLIC WORKS

LIFT STATION RENEWAL AND REPLACEMENT FY 2023

SCOTT #3 LIFT STATION PROPOSED SITE PLAN

WBS NUMBER	FOR CITY OF HOUSTON USE ONLY
R-000267-0179-4	
DRAWING SCALE	
HORIZ: 1" = 10' VERT: N/A	
CITY OF HOUSTON PM	
NAWARAJ PANTA, P.E.	
DWG. NO. SCT-C-03	SHEET NO. 103 OF 321

FILE PATH: \\idseg.com\FS\Projects\0000\005708500 CoH Lift Stations - FY 2023\CAD\DWG\PRODUCTION\103-SCOTT No 3 PROP SITE PLAN.dwg

PLOTTED: 12/17/2025 8:09 AM

STORMWATER DETENTION CALCULATIONS

- GROSS AREA 0.2234 AC
- PROP. IMPERVIOUS AREA 0.0421 AC
- STORAGE RATE 0.7500 AC-FT/AC
- STORAGE REQUIRED 0.0316 AC-FT

DETENTION CREDIT

- EXIST. IMPERVIOUS AREA REMOVED 0.0371 AC
- DETENTION CREDIT RATE 0.4000 AC-FT/AC
- DETENTION CREDIT VOLUME 0.0148 AC-FT

MITIGATION CALCULATIONS

- VOLUME OF FILL = (278 SF)(0.87 FT) + (134 SF)(0.9 FT) + (57 SF)(0.9 FT)
  V_F=0.0095 AC-FT
- VOLUME OF CUT = 138 FT^3 (DEMO OF EXIST MCC BUILDING)
  V_C=0.0032 AC-FT
- VOLUME REQUIRED
  V_F-V_C = 0.0095 - 0.0032 = 0.0063 AC-FT

TOTAL DETENTION

- REQUIRED = 0.0316 AC-FT - 0.0148 AC-FT + 0.0063 AC-FT = 0.0231 AC-FT
- PROVIDED = 0.0268 AC-FT

NOTES:

1. RESPONSIBILITY FOR MAINTENANCE OF THE DETENTION FACILITY WILL BE BY THE PROPERTY OWNER.
2. SUBSURFACE DRAINAGE SYSTEMS ARE REQUIRED TO BE DRAINED IN 48 HOURS.
3. OFFSITE FLOW IS UNAFFECTED BY THE PROPOSED LIFT STATION STRUCTURE AND CONCRETE PAVING. NO SEPARATE PAY.
4. CONTRACTOR TO SAW-CUT, REMOVE, AND REPLACE CONCRETE AS NECESSARY. NO SEPARATE PAY.
5. SAW-CUT AND REMOVE CONCRETE PAVEMENT AND INSTALL FOUNDATION AS SHOWN ON STRUCTURAL DRAWINGS SCT-E-07 AND SCT-E-08.
6. CONTRACTOR SHALL RESTORE DISTURBED AREAS TO EQUAL OR BETTER CONDITION AFTER PROPOSED STORM SEWER, AND MANHOLE HAVE BEEN INSTALLED AND TESTED PER CITY OF HOUSTON STANDARDS.

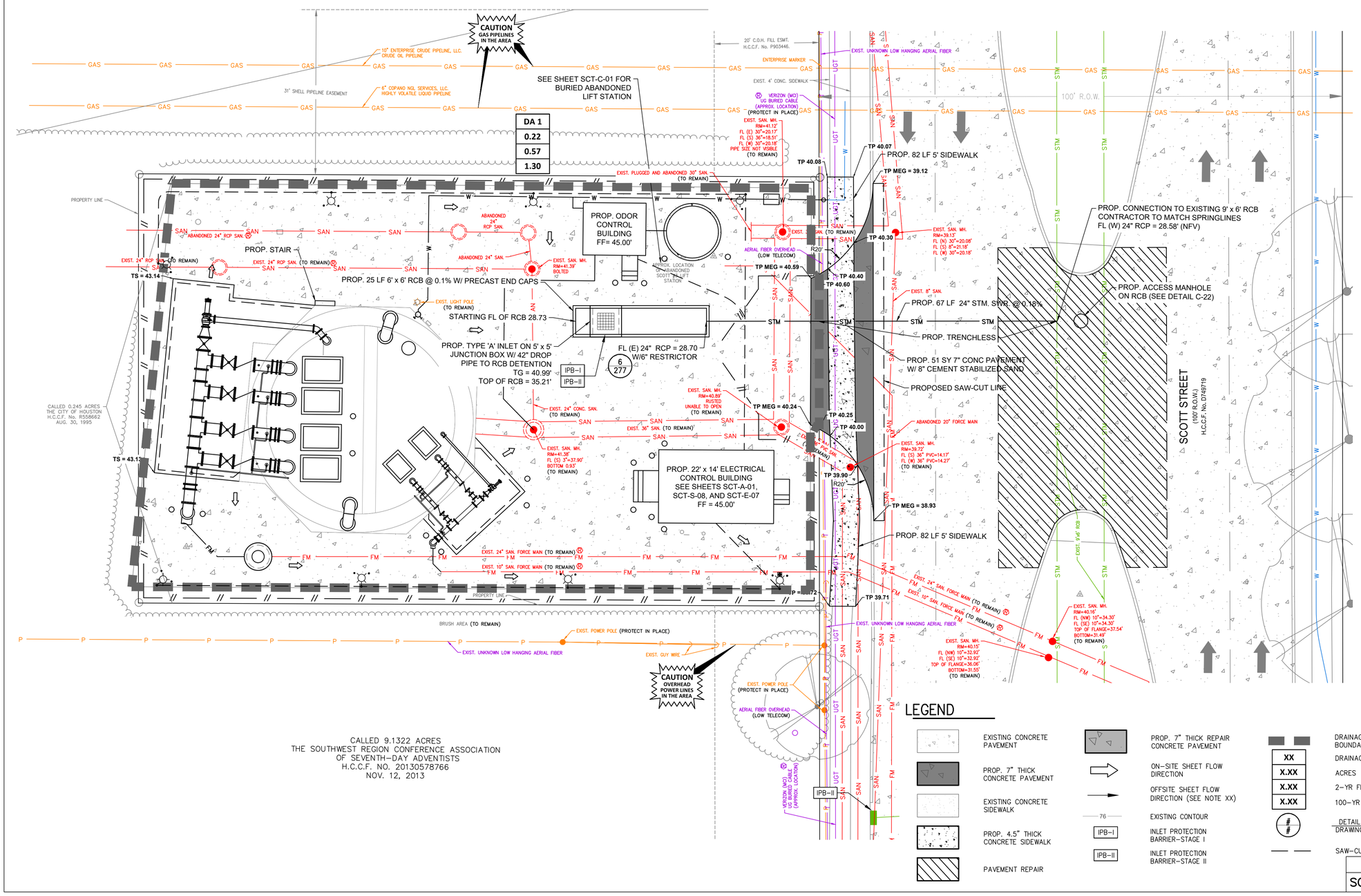

LEGEND

- EXISTING CONCRETE PAVEMENT
- PROP. 7" THICK CONCRETE PAVEMENT
- EXISTING CONCRETE SIDEWALK
- PROP. 4.5" THICK CONCRETE SIDEWALK
- PAVEMENT REPAIR
- PROP. 7" THICK REPAIR CONCRETE PAVEMENT
- ON-SITE SHEET FLOW DIRECTION
- OFFSITE SHEET FLOW DIRECTION (SEE NOTE XX)
- 76 EXISTING CONTOUR
- IPB-I INLET PROTECTION BARRIER-STAGE I
- IPB-II INLET PROTECTION BARRIER-STAGE II
- XX / X.XX / X.XX / X.XX DRAINAGE AREA BOUNDARY; DRAINAGE AREA NO.; ACRES; 2-YR FLOW (CFS); 100-YR FLOW (CFS)
- # / # DETAIL NO. / DRAWING NO.
- SAW-CUT CONCRETE

10' 0' 10'
SCALE
1"=10'

N W E S

BENCHMARK:

FLOODPLAIN REFERENCE MARK NUMBER 030070 IS A BRASS DISC IN CONCRETE STAMPED 030070 LOCATED ON NORTHEAST CORNER ON AIRPORT BLVD BRIDGE OVER SIMS BAYOU APPROXIMATELY 0.1 MILES EAST FROM THE INTERSECTION OF SCOTT STREET IN KEY MAP NO. 573G IN THE SIMS BAYOU WATERSHED.

ELEV. 43.59 FEET NAVD 1988, 2001 ADJUSTMENT

FLOODPLAIN NOTE:

FLOODPLAIN REFERENCE MARK NUMBER 030070 IS A BRASS DISC IN CONCRETE STAMPED 030070 LOCATED ON NORTH SIDEWALK ON AIRPORT BLVD BRIDGE OVER SIMS BAYOU APPROX. 0.1 MILE WEST FROM THE INTERSECTION OF SCOTT ST IN KEY MAP NO. 573G IN THE SIMS BAYOU WATERSHED

ELEV. 43.59 FEET NAVD 1988, 2001 ADJUSTMENT
100-YR ELEV. 38.00'
500-YR ELEV. 42.00'
FIRM PANEL: 48201C0890M

T.B.M #41:

SET 5/8" I.R. W/CAP LOCATED ON MEDIAN NOSE ON SCOTT ST. APPROX. 400 FT NORTH FROM THE INTERSECTION OF S. ACRES DR

ELEV.= 39.76 FT.

EXISTING UTILITY NOTE:

EXISTING UNDERGROUND UTILITY INFORMATION (TYPE, SIZE & OWNERSHIP) ARE SHOWN APPROXIMATELY BASED ON THE AVAILABLE RECORD DRAWINGS AND FIELD VERIFICATION (WHERE FEASIBLE) WITHOUT PROBING AND EXCAVATION. NO WARRANTY IS MADE AS TO THE ACCURACY OR COMPLETENESS OF UTILITY LOCATION SHOWN ON THE DRAWING. CAUTION SHOULD BE EXERCISED WHEN EXCAVATING OR BORE AND JACKING IN THE VICINITY OF UNDERGROUND UTILITIES. OWNERS OF THE UTILITIES SHOULD BE NOTIFIED PRIOR TO SUCH ACTIVITIES. CALL UTILITY COORDINATING COMMITTEE AT 713-223-4567, AT LEAST 48 HOURS PRIOR TO EXCAVATING IN THE STREET RIGHT-OF-WAY.

NOTICE:
FOR YOUR SAFETY, YOU ARE REQUIRED BY TEXAS LAW TO CALL 811 AT LEAST 48 HOURS BEFORE YOU DIG SO THAT UNDERGROUND LINES CAN BE MARKED. THIS SIGNATURE DOES NOT FULFILL YOUR OBLIGATION TO CALL 811

VERIFICATION OF PRIVATE UTILITY LINES

Date

CenterPoint Energy natural gas utilities shown. (Gas service lines are not shown). This signature not be used for conflict verification.

Signature valid for six months.

Date

CenterPoint Energy/UNDERGROUND Electrical Facilities Verification ONLY. (This signature verifies existing underground facilities – not to be used for conflict verification)

Signature valid for six months.

Date

Approved for AT&T underground conduit facilities only.
Signature valid for one year.

IDS Engineering Group
13430 NW. Freeway, Suite 700
Houston, Tx. 77040
713.462.3178
TxEng Firm 2726 | TxSurv Firm 10110700

SURVEYED BY: KUO & ASSOCIATES, INC.
TBPE FIRM #F-4578; TBPLS FIRM #1007560

THIS DOCUMENT IS RELEASED FOR THE PURPOSE OF REVIEW UNDER THE AUTHORITY OF MARCEL KHOUW. P.E. 101807 ON 12/17/2025. IT IS NOT TO BE USED FOR CONSTRUCTION PURPOSES.

CITY OF HOUSTON
HOUSTON PUBLIC WORKS

LIFT STATION RENEWAL AND REPLACEMENT FY 2023

SCOTT #3 LIFT STATION GRADING PLAN AND DRAINAGE PLAN

WBS NUMBER	FOR CITY OF HOUSTON USE ONLY
R-000267-0179-4	
DRAWING SCALE	
HORIZ: VALUE VERT: N/A	
CITY OF HOUSTON PM	
NAWARAJ PANTA, P.E.	
DWG. NO. SCT-C-04	SHEET NO. 104 OF 321

NO.	DATE	REVISION	APP.

FILE PATH: \\tdseg.com\FS\Projects\0000\005708500 CoH Lift Stations - FY 2023\CAD\DWG\PRODUCTION\104-SCOTT No 3 GRADING.dwg

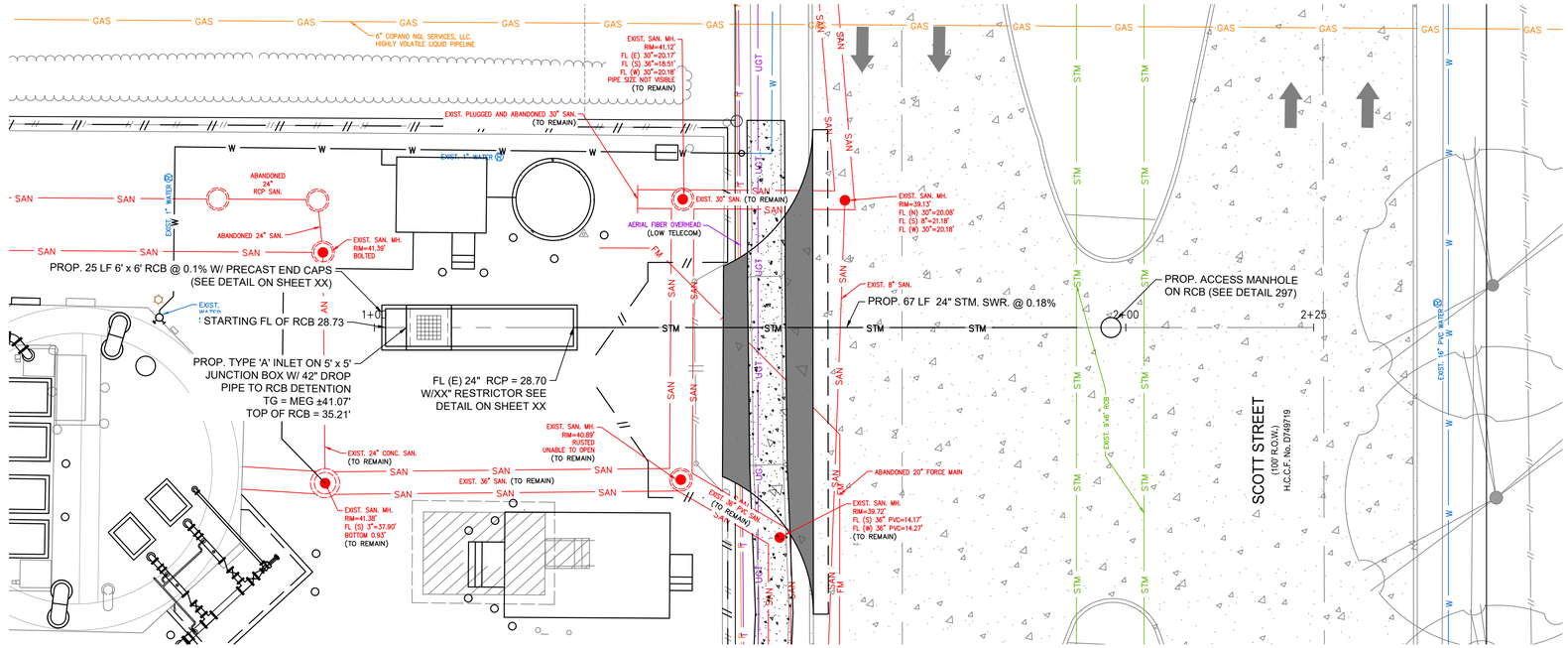

10' 0' 10'

SCALE

H: 1" = 10'
V: 1" = 2'

N
W E
S

NO.	DATE	REVISION	APP.

FOR PERMITTING REVIEW ONLY - TO BE SUBMITTED AT 90%

IDS Engineering Group
13430 NW. Freeway, Suite 700
Houston, Tx. 77040
713.462.3178
TxEng Firm 2726 | TxSurv Firm 10110700

SURVEYED BY: KUO & ASSOCIATES, INC.
TBPE FIRM #F-4578; TBPLS FIRM #1007560

THIS DOCUMENT IS RELEASED FOR THE PURPOSE OF REVIEW UNDER THE AUTHORITY OF MARCEL KHOUW, P.E. 101807 ON 12/17/2025. IT IS NOT TO BE USED FOR CONSTRUCTION PURPOSES.

CITY OF HOUSTON
HOUSTON PUBLIC WORKS

LIFT STATION RENEWAL
AND REPLACEMENT FY 2023

SCOTT NO. 3 LIFT STATION
PLAN AND PROFILE

WBS NUMBER	FOR CITY OF HOUSTON USE ONLY
R-000267-0179-4	
DRAWING SCALE	
HORIZ: 1" = 10' VERT: 1" = 2'	
CITY OF HOUSTON PM	
NAWARAJ PANTA, P.E.	
SHEET NO. 105 OF 321	

DWG. NO.
SCT-C-05

PLOTTED: 12/17/2025 8:09 AM
FILE PATH: \\idseg.com\FS\Projects\0000\005708500 CoH Lift Stations - FY 2023\CAD\DWG\PRODUCTION\105-SCOTT No 3 PLAN AND PROFILE.dwg

PLOTTED: 12/17/2025 8:09 AM

STORM SEWER CALCULATIONS

IDS ENGINEERING GROUP

CLIENT NAME: **CITY OF HOUSTON**
PROJECT NAME: **WBS NO. R-000267-0179-3 - LOCKWOOD LIFT STATION**
IDS JOB NO: **0057-085-00**
DATE PRINTED: November 10, 2025
DATE REVISED: October 8, 2025 BY: CM

SELECT STORM EVENT FREQUENCY: 2 year
SELECT APPROPRIATE LAND USE: Light Industrial
ENTER DESIGN CURB HEIGHT (inches): 0

Re-Generate Formulas

Line	Manhole or Inlet Number U / S	D / S	Reach Length (feet)	Diameter or Rise (inches)	Span (inches)	No. of Barrels	Pipe Material	Pipe Grade Minimum (%)	Pipe Grade Actual (%)	Area (acres)	Sum of Area (acres)	Runoff Coeff.	Sum of C x Area (acres)	Travel Time (minutes)	Time of Concentration (minutes)	Intensity (in./hr.)	Sum of Flows (cfs)	Design Flow (cfs)	Design Velocity (fps)	Actual Velocity (fps)	Hydraulic Gradient (%)	Change in Head (feet)	Upstream Top of Grate (feet)	Hydraulic Grade Upstream (feet)	Hydraulic Grade Downstream (feet)	Manhole Drop (D/S) (feet)	Pipe Flowline Upstream (feet)	Pipe Flowline Downstream (feet)	Depth from Gutter to HGL (feet)	Depth of Cover (feet)	Upstream NG Elev. (feet)	Depth from NG to HGL (feet)
1	RCB DET	RCB	67.00	24		1	RCP	0.180%	0.180%	0.22	0.22	0.65	0.15	6.12	22.7	3.95	0.57	9.60	3.06	0.18	0.001%	0.00	41.07	30.58	30.58		28.70	28.58	10.49	10.37	41.07	10.49

NOTES:
1. This spreadsheet has been developed using the City of Houston criteria outlined in the November 2023 Infrastructure Design Manual. The Rational Method has been used to calculate flows, and Manning's Formula for pipes flowing full has been used to calculate velocities.
2. This spreadsheet calculates rainfall intensity using the b, d, and e constants for Harris County and the City of Houston, as outlined in Appendix H of the Harris County Infrastructure Regulations, and Chapter 9 of the November 2023 City of Houston Infrastructure Design Manual.
3. Minimum storm sewer grades and maximum velocities as established in the City of Houston design criteria have been used to establish the grades used in this system.
4. Land Use "SFR" represents Single-Family Residential development. Land Use "MFR" represents Multi-Family Residential development.
5. Design flow and velocity are based entirely on pipe grade and represent the condition when pipe is flowing full with the hydraulic grade line equal to the pipe grade, and are used to demonstrate that the pipe slopes used in the calculations conform to the City of Houston minimum and maximum standards.

Runoff Coefficient Table	
Land Use	C
SFR (> ½ ac. lots)	0.35
SFR (¼ - ½ ac. lots)	0.45
SFR (< ¼ ac. lots)	0.55
MFR (< 20 d.u./ac.)	0.65
MFR (>= 20 d.u./ac.)	0.80
Business Districts	0.80
Light Industrial	0.65
Heavy Industrial	0.75
Railroad Yard Areas	0.30
Parks/Open Areas	0.18
Land Use Varies	ENTER

Pipe Material	Mannings "n" Value	Pipe Description
CLAY	0.012	Extra Strength Vitrified Clay Pipe
CMP	0.024	Corrugated Metal Pipe
CMPSI	0.013	CMP w/ Smooth Interior
HDPE	0.013	High Density Polyethylene Pipe
PVC	0.013	Polyvinyl Chloride Pipe
RCA	0.013	Reinforced Concrete Arch Pipe
RCB	0.015	Reinforced Concrete Box Culvert
RCE	0.013	Reinforced Concrete Elliptical Pipe
RCP	0.013	Reinforced Concrete Pipe

Rainfall Freq. (yrs)	b	d	e
2 year	***48.35***	***9.07***	***0.7244***
5 year	52.32	7.88	0.6900
10 year	54.68	6.96	0.6623
25 year	57.79	5.89	0.6294
50 year	61.00	5.46	0.6096
100 year	60.66	4.44	0.5797
500 year	62.17	2.95	0.5196

STORM SEWER CALCULATIONS

IDS ENGINEERING GROUP

CLIENT NAME: **CITY OF HOUSTON**
PROJECT NAME: **WBS NO. R-000267-0179-3 - LOCKWOOD LIFT STATION**
IDS JOB NO: **0057-085-00**
DATE PRINTED: November 10, 2025
DATE REVISED: October 8, 2025 BY: CM

SELECT STORM EVENT FREQUENCY: 100 year
SELECT APPROPRIATE LAND USE: Light Industrial
ENTER DESIGN CURB HEIGHT (inches): 0

Re-Generate Formulas

Line	Manhole or Inlet Number U / S	D / S	Reach Length (feet)	Diameter or Rise (inches)	Span (inches)	No. of Barrels	Pipe Material	Pipe Grade Minimum (%)	Pipe Grade Actual (%)	Area (acres)	Sum of Area (acres)	Runoff Coeff.	Sum of C x Area (acres)	Travel Time (minutes)	Time of Concentration (minutes)	Intensity (in./hr.)	Sum of Flows (cfs)	Design Flow (cfs)	Design Velocity (fps)	Actual Velocity (fps)	Hydraulic Gradient (%)	Change in Head (feet)	Upstream Top of Grate (feet)	Hydraulic Grade Upstream (feet)	Hydraulic Grade Downstream (feet)	Manhole Drop (D/S) (feet)	Pipe Flowline Upstream (feet)	Pipe Flowline Downstream (feet)	Depth from Gutter to HGL (feet)	Depth of Cover (feet)	Upstream NG Elev. (feet)	Depth from NG to HGL (feet)
1	RCB DET	RCB	67.00	24		1	RCP	0.180%	0.180%	0.22	0.22	0.65	0.15	2.70	22.7	8.95	1.30	9.60	3.06	0.41	0.003%	0.00	41.07	30.58	30.58		28.70	28.58	10.49	10.37	41.07	10.49

NOTES:
1. This spreadsheet has been developed using the City of Houston criteria outlined in the November 2023 Infrastructure Design Manual. The Rational Method has been used to calculate flows, and Manning's Formula for pipes flowing full has been used to calculate velocities.
2. This spreadsheet calculates rainfall intensity using the b, d, and e constants for Harris County and the City of Houston, as outlined in Appendix H of the Harris County Infrastructure Regulations, and Chapter 9 of the November 2023 City of Houston Infrastructure Design Manual.
3. Minimum storm sewer grades and maximum velocities as established in the City of Houston design criteria have been used to establish the grades used in this system.
4. Land Use "SFR" represents Single-Family Residential development. Land Use "MFR" represents Multi-Family Residential development.
5. Design flow and velocity are based entirely on pipe grade and represent the condition when pipe is flowing full with the hydraulic grade line equal to the pipe grade, and are used to demonstrate that the pipe slopes used in the calculations conform to the City of Houston minimum and maximum standards.

Runoff Coefficient Table	
Land Use	C
SFR (> ½ ac. lots)	0.35
SFR (¼ - ½ ac. lots)	0.45
SFR (< ¼ ac. lots)	0.55
MFR (< 20 d.u./ac.)	0.65
MFR (>= 20 d.u./ac.)	0.80
Business Districts	0.80
Light Industrial	0.65
Heavy Industrial	0.75
Railroad Yard Areas	0.30
Parks/Open Areas	0.18
Land Use Varies	ENTER

Pipe Material	Mannings "n" Value	Pipe Description
CLAY	0.012	Extra Strength Vitrified Clay Pipe
CMP	0.024	Corrugated Metal Pipe
CMPSI	0.013	CMP w/ Smooth Interior
HDPE	0.013	High Density Polyethylene Pipe
PVC	0.013	Polyvinyl Chloride Pipe
RCA	0.013	Reinforced Concrete Arch Pipe
RCB	0.015	Reinforced Concrete Box Culvert
RCE	0.013	Reinforced Concrete Elliptical Pipe
RCP	0.013	Reinforced Concrete Pipe

Rainfall Freq. (yrs)	b	d	e
2 year	48.35	9.07	0.7244
5 year	52.32	7.88	0.6900
10 year	54.68	6.96	0.6623
25 year	57.79	5.89	0.6294
50 year	61.00	5.46	0.6096
100 year	***60.66***	***4.44***	***0.5797***
500 year	62.17	2.95	0.5196

Master Spreadsheet - Storm Sewer Calculations Updated 02/10/2025
\\idseg.com\FS\Projects\0000\005708500 CoH Lift Stations - FY 2023\Eng\Calcs\Drainage\[3. Scott #3 Drainage Calcs.xlsx]CALCULATIONS

NO.	DATE	REVISION	APP.

IDS Engineering Group
13430 NW. Freeway, Suite 700
Houston, Tx. 77040
713.462.3178
TxEng Firm 2726 | TxSurv Firm 10110700

SURVEYED BY: KUO & ASSOCIATES, INC.
TBPE FIRM #F-4578; TBPLS FIRM #1007560

THIS DOCUMENT IS RELEASED FOR THE PURPOSE OF REVIEW UNDER THE AUTHORITY OF MARCEL KHOUW, P.E. 101807 ON 12/17/2025. IT IS NOT TO BE USED FOR CONSTRUCTION PURPOSES.

CITY OF HOUSTON
HOUSTON PUBLIC WORKS

LIFT STATION RENEWAL AND REPLACEMENT FY 2023

SCOTT #3 LIFT STATION DRAINAGE CALCULATIONS

WBS NUMBER	FOR CITY OF HOUSTON USE ONLY
R-000267-0179-4	
DRAWING SCALE	
HORIZ: N/A VERT: N/A	
CITY OF HOUSTON PM	
NAWARAJ PANTA, P.E.	
DWG. NO. SCT-C-06	SHEET NO. 106 OF 321

FILE PATH: \\idseg.com\FS\Projects\0000\005708500 CoH Lift Stations - FY 2023\CAD\DWG\PRODUCTION\106-SCOTT No 3 CALCULATIONS.dwg

PLOTTED: 12/17/2025 10:06 AM

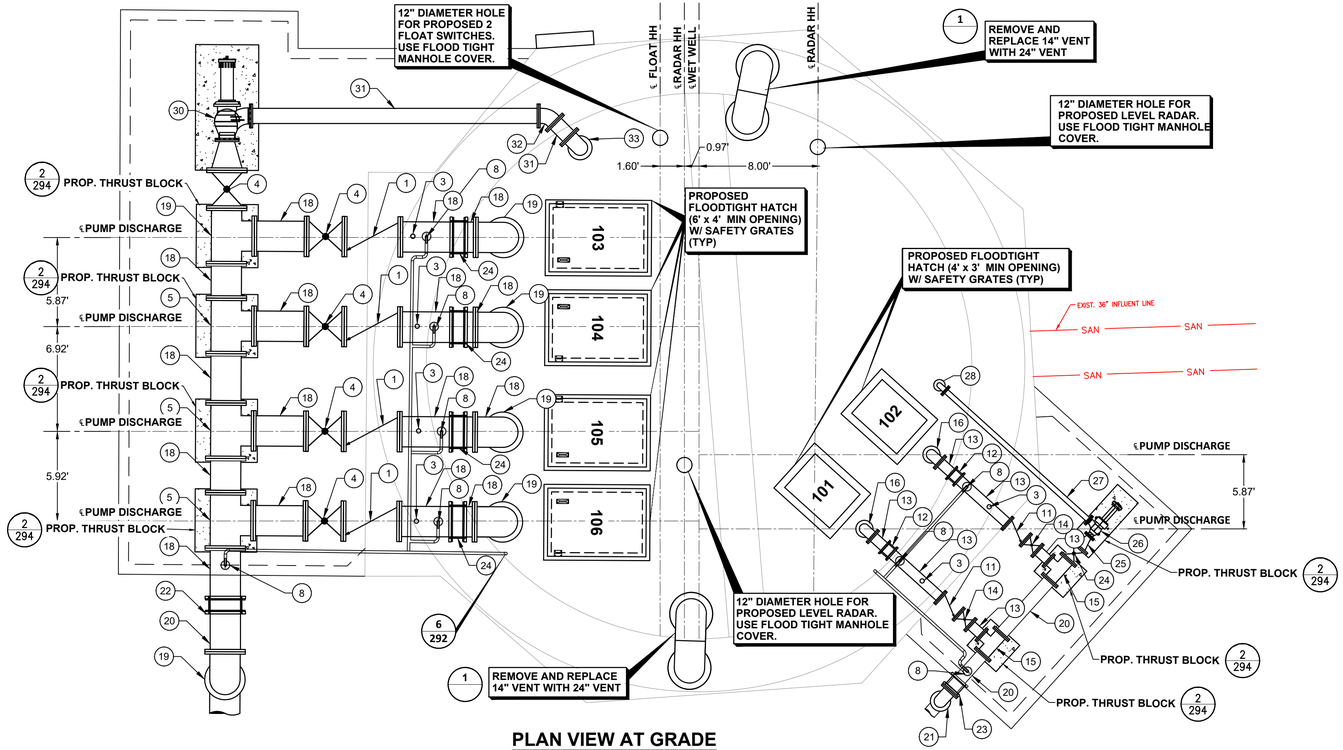

PLAN VIEW AT GRADE

SCALE: 1" = 5'

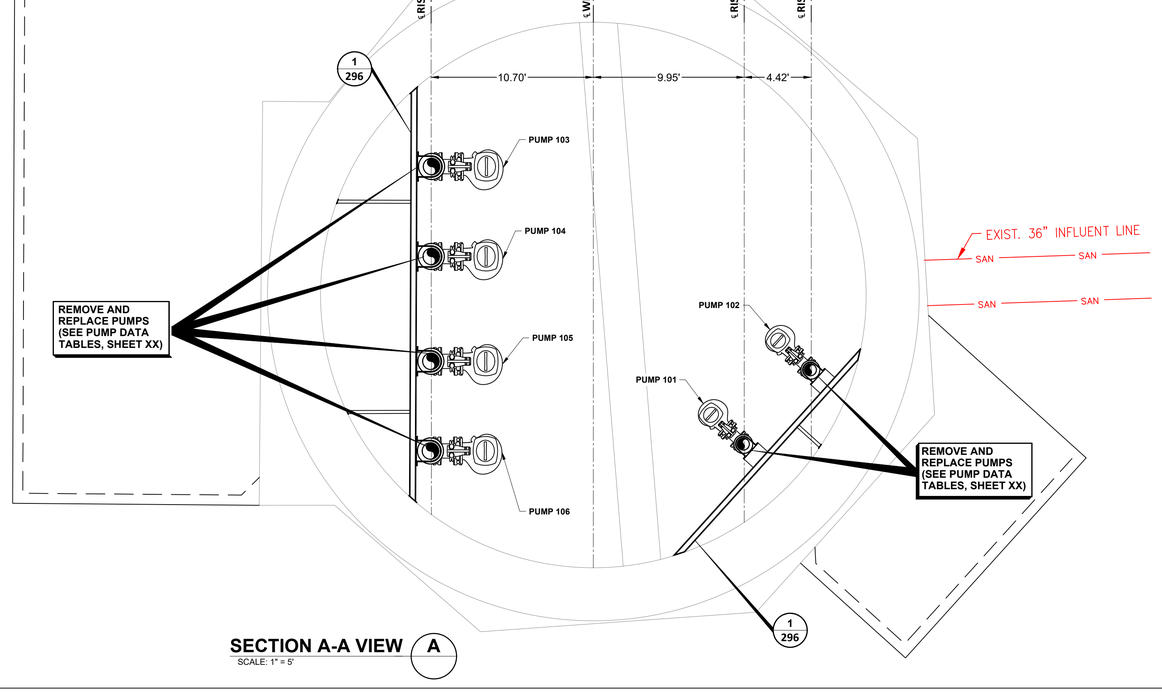

SECTION A-A VIEW A

SCALE: 1" = 5'

NOTES:

1. ABRASIVE BLAST AND COAT ALL PIPING AND FITTINGS NOT BEING REPLACED IN WET WELL.
2. CONTRACTOR TO VERIFY DIMENSIONS REQUIRED TO INSTALL AND OPERATE VALVES.
3. EXISTING LIFT STATION WET WELL STRUCTURE TO REMAIN.
4. UV PROTECTIVE COATINGS ARE REQUIRED BY THE CITY OF HOUSTON ON ALL VENT PIPES.
5. LABEL HATCHES WITH THE CORRESPONDING PUMP NUMBER USING A 12-INCH BY 6-INCH ALUMINUM PLATE ENGRAVED WITH 1.5-INCH LETTERING WELDED TO THE HATCH.
6. CONTRACTOR TO CONFIRM SIZE AND LOCATION OF THE WET WELL HATCHES PER HATCH AND PUMP MANUFACTURER REQUIREMENTS.
7. PUMP AND ANCHOR BOLTS ARE TO BE ADHESIVE TYPE, AND EMBEDDED IN THE CONCRETE SLAB. CONTRACTOR TO SUBMIT DESIGN OF PUMPS ANCHOR BOLTS AND PATTERNS, INCLUDING CALCULATIONS, DURING SHOP DRAWINGS SUBMISSION.
8. ALL PIPING IN THE WET WELL SHALL BE FLANGED. NO FLANGED COUPLING ADAPTORS, OR VICTAULIC STYLE COUPLINGS SHALL BE PERMITTED INSIDE OF THE WET WELL.
9. ACCESS HATCHES SHALL BE FOREST GREEN. SAFETY GRATING SHALL BE FURNISHED WITH SAFETY ORANGE POWDER COAT FINISH.

KEYED NOTE	ITEM	QTY
1	CHECK VALVE (24")	4
2	ECCENTRIC REDUCER (8"x6")	2
3	PRESSURE GAUGE ASSEMBLY	6
4	PLUG VALVE (24")	5
5	TEE (24" x 24")	3
6	316 STAINLESS STEEL SUPPORT	18
7	45° BEND (24")	8
8	2" AIR RELEASE & VACUUM VALVE ASSEMBLY	8
9	ADJUSTABLE PIPE SUPPORT	12
10	ECCENTRIC REDUCER (24"x12")	4
11	CHECK VALVE (8")	2
12	FLEXIBLE COUPLING (8")	2
13	SPOOL PIECE (8")	7
14	PLUG VALVE (8")	2
15	TEE (10" x 8")	2
16	90° BEND (8")	2
17	45° BEND (8")	4
18	SPOOL PIECE (24")	33
19	90° BEND (24")	5
20	SPOOL PIECE (10")	2
21	90° BEND (10")	2
22	FLEXIBLE COUPLING (24")	5
23	FLEXIBLE COUPLING (10")	1
24	PLUG VALVE (10")	1
25	REDUCER (10" x 4")	1
26	SRA-3000A SURGE RELIVE VALVE (4") SET TO OPEN AT 55 PSI	1
27	SPOOL PIECE (4")	1
28	90° BEND (4")	1
29	REDUCER (24" x 12")	1
30	SRA-3000A SURGE RELIVE VALVE (12") SET TO OPEN AT 75 PSI	1
31	SPOOL PIECE (12")	2
32	45° BEND (12")	1
33	90° BEND (12")	1

LEGEND

- (#/#) DETAIL NO. / SHEET NO.
- EXISTING CONCRETE
- PROPOSED CONCRETE

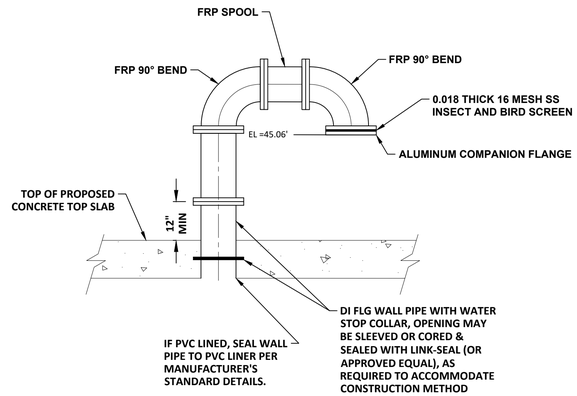

PROPOSED STRUCTURE PENETRATION 1

N.T.S.

NO.	DATE	REVISION	APP.

IDS Engineering Group
13430 NW. Freeway, Suite 700
Houston, Tx. 77040
713.462.3178
TxEng Firm 2726 | TxSurv Firm 10110700

SURVEYED BY: KUO & ASSOCIATES, INC.
TBPE FIRM #F-4578; TBPLS FIRM #1007560

THIS DOCUMENT IS RELEASED FOR THE PURPOSE OF REVIEW UNDER THE AUTHORITY OF MARCEL KHOUW, P.E. 101807 ON 12/17/2025. IT IS NOT TO BE USED FOR CONSTRUCTION PURPOSES.

CITY OF HOUSTON

HOUSTON PUBLIC WORKS

LIFT STATION RENEWAL AND REPLACEMENT FY 2023

SCOTT #3 LIFT STATION PLAN AT GRADE AND BASE

WBS NUMBER	FOR CITY OF HOUSTON USE ONLY
R-000267-0179-4	
DRAWING SCALE	
HORIZ: AS NOTED VERT: N/A	
CITY OF HOUSTON PM	
NAWARAJ PANTA, P.E.	
DWG. NO. SCT-C-07	SHEET NO. 107 OF 321

FILE PATH: \\idseg.com\FS\Projects\0000\005708500 CoH Lift Stations - FY 2023\CAD\DWG\PRODUCTION\107-SCOTT No 3 PLAN AT GRADE.dwg

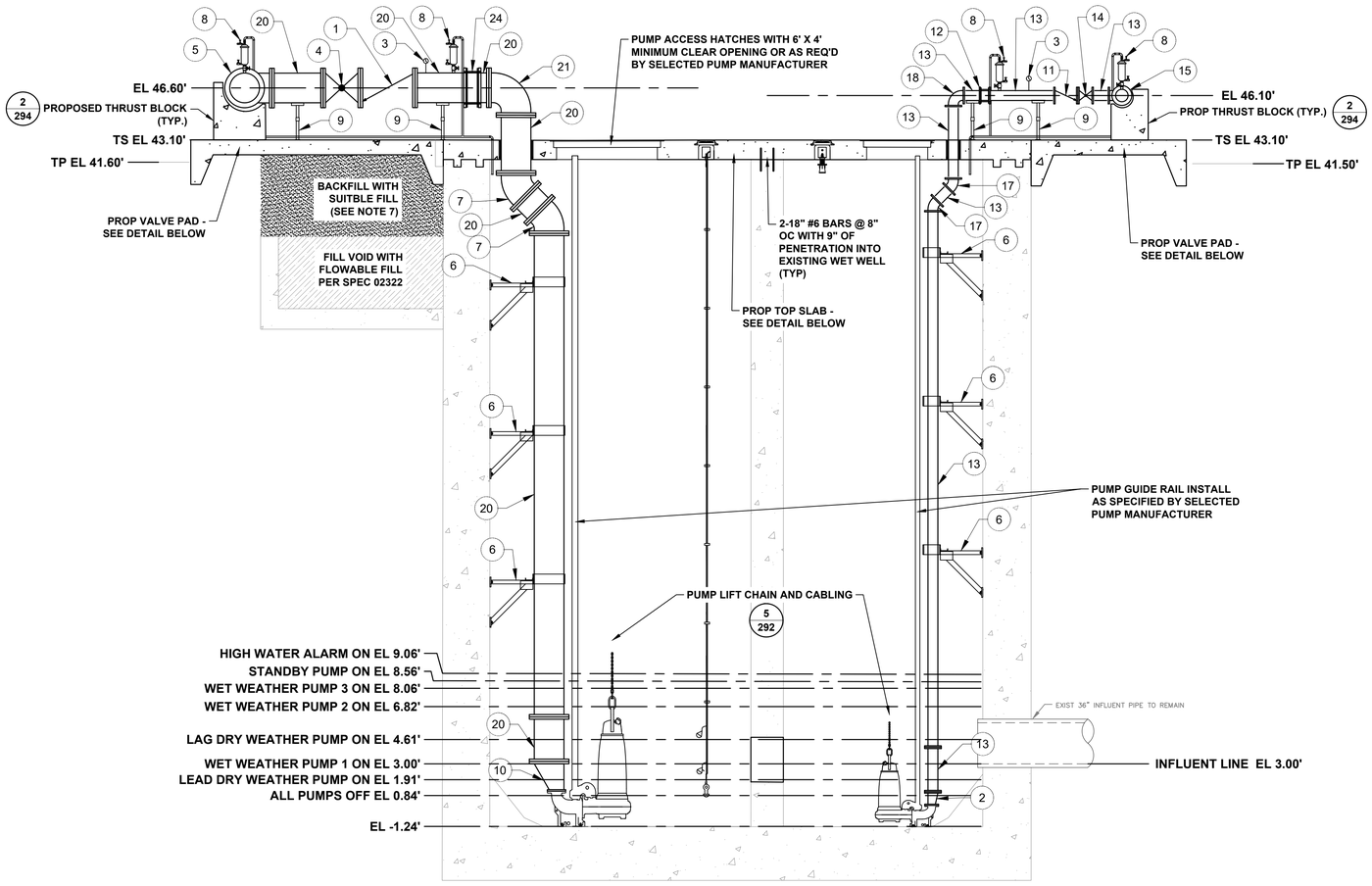

SECTIONAL ELEVATION A

SCALE: 1" = 5'

KEYED NOTE	ITEM	QTY
1	CHECK VALVE (24")	4
2	ECCENTRIC REDUCER (8"x6")	2
3	PRESSURE GAUGE ASSEMBLY	6
4	PLUG VALVE (24")	4
5	TEE (24" x 24")	3
6	316 STAINLESS STEEL SUPPORT	18
7	45° BEND (24")	8
8	2" AIR RELEASE & VACUUM VALVE ASSEMBLY	8
9	ADJUSTABLE PIPE SUPPORT	12
10	ECCENTRIC REDUCER (24"x12")	4
11	CHECK VALVE (8")	2
12	FLEXIBLE COUPLING (8")	2
13	SPOOL PIECE (8")	7
14	PLUG VALVE (8")	2
15	TEE (10" x 8")	2
16	90° ELBOW (8")	2
17	45° BEND (8")	4
18	BLIND FLANGE (10")	1
19	TEE (24" x 24") W/ BLIND FLANGE (24")	1
20	SPOOL PIECE (24")	33
21	90° ELBOW (24")	5
22	SPOOL PIECE (10")	2
23	90° ELBOW (10")	2
24	FLEXIBLE COUPLING (24")	5
25	FLEXIBLE COUPLING (10")	1

NOTES:

1. ABRASIVE BLAST AND COAT ALL PIPING AND FITTINGS NOT BEING REPLACED IN WET WELL.
2. CONTRACTOR TO VERIFY DIMENSIONS REQUIRED TO INSTALL AND OPERATE VALVES.
3. EXISTING LIFT STATION WET WELL STRUCTURE TO REMAIN.
4. UV PROTECTIVE COATINGS ARE REQUIRED BY THE CITY OF HOUSTON ON ALL VENT PIPES.
5. LABEL HATCHES WITH THE CORRESPONDING PUMP NUMBER USING A 12–INCH BY 6–INCH ALUMINUM PLATE ENGRAVED WITH 1.5–INCH LETTERING WELDED TO THE HATCH.
6. FILL VOID LEFT BY REMOVAL OF EXISTING VALVE VAULT WITH FLOWABLE FILL.
7. SEE ELECTRICAL PLANS FOR ADDITIONAL IMPROVEMENTS.
8. ABRASIVE BLAST AND COAT TO BE IN ACCORDANCE WITH SYSTEM 108 PER SPEC SECTION 09901 PART 2.03J.
9. CONTRACTOR TO CONFIRM SIZE AND LOCATION OF THE WET WELL HATCHES PER HATCH AND PUMP MANUFACTURER REQUIREMENTS.
10. PUMP AND ANCHOR BOLTS ARE TO BE ADHESIVE TYPE, AND EMBEDDED IN THE CONCRETE SLAB. CONTRACTOR TO SUBMIT DESIGN OF PUMP ANCHOR BOLTS AND PATTEN, INCLUDING CALCULATIONS, DURING SHOP DRAWING SUBMISSION.
11. ALL PIPING IN THE WET WELL SHALL BE FLANGED. NO FLANGED COUPLING ADAPTORS, OR VICTAULIC STYLE COUPLINGS SHALL BE PERMITTED INSIDE OF THE WET WELL.
12. ACCESS HATCHES SHALL BE FOREST GREEN. SAFETY GRATING SHALL BE FURNISHED WITH SAFETY ORANGE POWDER COAT FINISH.
13. INSTALL PLUG VALVES TO OPEN UPWARD AND TO CLOSE TO A SEATING POSITION.
14. INSTALL CHECK VALVES SO THAT WEIGHT LEVER POSITION IS APPROXIMATELY 45 DEGREES BELOW THE VALVE HORIZONTAL CENTER LINE IN THE CLOSE POSITION AND APPROXIMATELY 45 DEGREE ABOVE THE HORIZONTAL CENTER LINE IN THE FULL OPEN POSITION.
15. PROPOSED FLOAT SWITCH AND LEVEL RADARS SHOWN FOR REFERENCE. REFER TO (SCT–C–07) FOR LOCATION AND SIZE.

LEGEND

- (#/#) DETAIL NO. / SHEET NO.
- EXISTING CONCRETE
- PROPOSED CONCRETE
- REMOVE AND REPLACE CONCRETE AS PER DETAIL 11, SHEET XX.
- PROP. FLOWABLE FILL

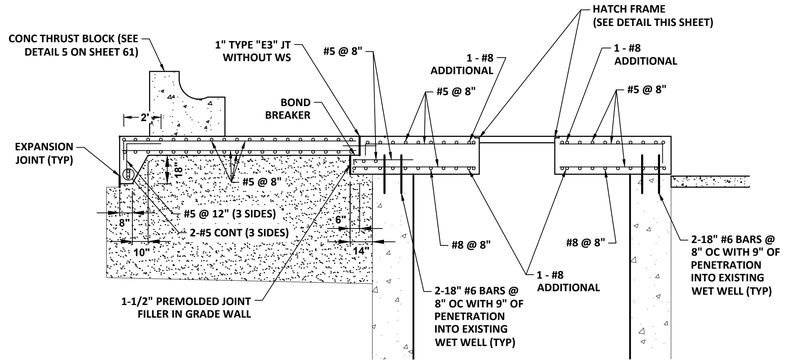

PIPE SUPPORT SLAB AND WET WELL TOP SLAB DETAIL

SCALE: 1"=4'

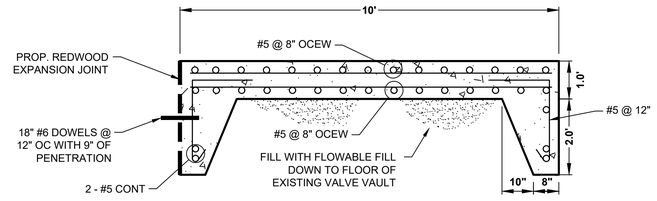

DRY WEATHER DISCHARGE PIPING CONCRETE SLAB DETAIL

SCALE: 1" = 2'

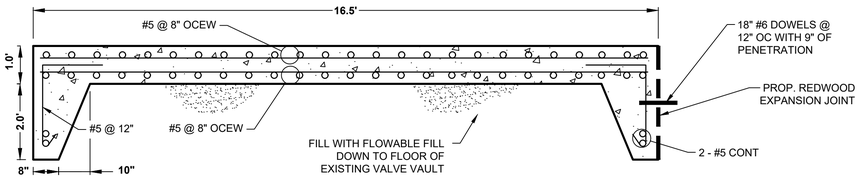

WET WEATHER DISCHARGE PIPING CONCRETE SLAB DETAIL

SCALE: 1" = 2'

IDS Engineering Group
13430 NW. Freeway, Suite 700
Houston, Tx. 77040
713.462.3178
TxEng Firm 2726 | TxSurv Firm 10110700

SURVEYED BY: KUO & ASSOCIATES, INC.
TBPE FIRM #F-4578; TBPLS FIRM #1007560

THIS DOCUMENT IS RELEASED FOR THE PURPOSE OF REVIEW UNDER THE AUTHORITY OF MARCEL KHOUW, P.E. 101807 ON 12/17/2025. IT IS NOT TO BE USED FOR CONSTRUCTION PURPOSES.

CITY OF HOUSTON
HOUSTON PUBLIC WORKS

LIFT STATION RENEWAL AND REPLACEMENT FY 2023

SCOTT #3 LIFT STATION ELEVATION SECTION

WBS NUMBER	FOR CITY OF HOUSTON USE ONLY
R–000267–0179–4	
DRAWING SCALE	
HORIZ: AS NOTED VERT: N/A	
CITY OF HOUSTON PM	
NAWARAJ PANTA, P.E.	
DWG. NO. SCT–C–08	SHEET NO. 108 OF 321

NO.	DATE	REVISION	APP.

PLOTTED: 12/17/2025 8:10 AM

FILE PATH: \\idseg.com\FS\Projects\0000\005708500 CoH Lift Stations – FY 2023\CAD\DWG\PRODUCTION\108–SCOTT No 3 ELEV SECTION.dwg

PLOTTED: 12/17/2025 8:10 AM

DESIGN POINT
1700 GPM @ 78.46

SCOTT #3 LIFT STATION
DRY WEATHER CONVERSION - KSB KRTK 151-403/306XFG-K

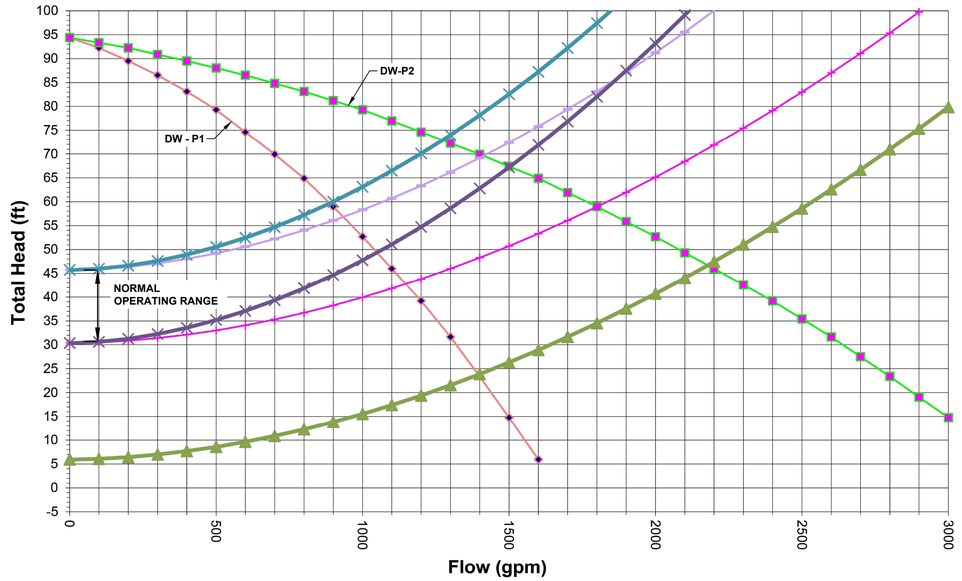

DESIGN POINT
12000 GPM @ 100'

SCOTT #3 LIFT STATION
WET WEATHER CONVERSION - KSB KRT K 300-505/1206XNG-K

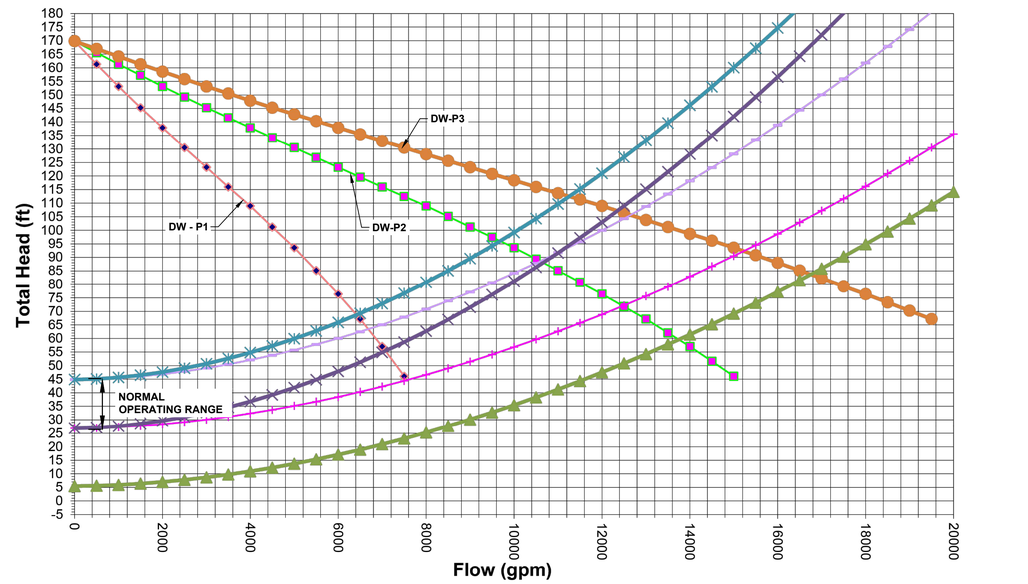

STATION OPERATING TABLES

PROPOSED CONDITION - 23.2 MGD @ FLOODED WET WELL CONDITION

RISING WATER LEVEL

WATER LEVEL ELEVATION	ACTION	PUMP(S) IN OPERATION
0.84	PUMPS OFF LEVEL - NO ACTION	ALL PUMPS ARE OFF
1.91	LEAD DRY WEATHER PUMP TURNS ON	LEAD DW PUMP ON
3.00	WET WEATHER PUMP 1 TURNS ON	LEAD DW PUMP ON & WW PUMP 1 ON
4.61	LAG DRY WEATHER PUMP TURNS ON	LEAD AND LAG DW & WW PUMP 1 ON
6.82	WET WEATHER PUMP 2 TURNS ON	ALL DW PUMPS & WW PUMP 1 & 2 ON
8.06	WET WEATHER PUMP 3 TURNS ON	ALL DW PUMPS & WW PUMP 1, 2, & 3 ON
8.56	STANDBY WET WEATHER PUMP TURNS ON	ALL PUMPS ON
9.06	HIGH WATER ALARM ON	HIGH WATER ALARM SOUND

FALLING WATER LEVEL

WATER LEVEL ELEVATION	ACTION	PUMP(S) IN OPERATION
9.06	HIGH WATER ALARM ON	HIGH WATER ALARM SOUND
8.56	HIGH WATER LEVEL ALARM OFF	ALL PUMPS ON
8.06	STANDBY WET WEATHER PUMP TURNS OFF	ALL DW PUMPS & WW PUMP 1, 2, & 3 ON
6.82	WET WEATHER PUMP 1 TURNS OFF	ALL DW PUMPS & WW PUMP 2 & 3 ON
4.61	WET WEATHER PUMP 2 TURNS OFF	ALL DW PUMPS & WW PUMP 3 ON
3.00	LEAD DRY WEATHER PUMP TURNS OFF	LAG DRY WEATHER & WW 3 PUMP ON
1.91	WET WEATHER PUMP 3 TURNS OFF	LAG DW PUMP ON
0.84	LAG DRY WEATHER PUMP TURNS OFF	ALL PUMPS STOPPED - SEE NOTE 1

NOTES:

1. PUMP ROTATION SHALL BE AS FOLLOWS: WW4(STANDBY)->WW1, DW2->DW1, WW1->WW2, WW2->WW3, WW3->WW4(STANDBY).

DRY WEATHER PUMP DATA TABLE*

PUMP CHARACTERISTICS	PUMP NO. 1	PUMP NO. 2
MOTOR DATA		
NOMIMAL SIZE (HP)	30	30
MAX SPEED (RPM)	1200	1200
SOLIDS PASSAGE		
MINIMUM SPHERE (IN)	3	3
CAPACITY (GPM)		
DESIGN	850	850
RUNOUT	1630	1630
Actual Cumulative Flow	1,067	1,400
DISCHARGE HEAD (FT)		
DESIGN	70.00	70.00
RUNOUT	6.0	6.0
SHUT OFF	94.4	94.4
EFFICIENCY (%)		
DESIGN	69.4	69.4
NPSHR (FT)		
DESIGN	5.3	5.3

*KSB KRTK 151-403306XFG-K USED FOR ALL CALCULATIONS

WET WEATHER PUMP DATA TABLE*

PUMP CHARACTERISTICS	PUMP NO. 1	PUMP NO. 2	PUMP NO. 3	PUMP NO. 4
MOTOR DATA				
NOMIMAL SIZE (HP)	161	161	161	161
MAX SPEED (RPM)	1184	1184	1184	1184
SOLIDS PASSAGE				
MINIMUM SPHERE (IN)	5	5	5	5
CAPACITY (GPM)				
DESIGN	4070	4070	4070	4070
RUNOUT	7534	7534	7534	7534
Actual Cumulative Flow	6,400	10,500	12,500	
DISCHARGE HEAD (FT)				
DESIGN	110.00	110.00	110.00	110.00
RUNOUT	52	52	52	52
SHUT OFF	129.0	129.0	129.0	129.0
EFFICIENCY (%)				
DESIGN	84.0	84.0	84.0	84.0
NPSHR (FT)				
DESIGN	10.8	10.8	10.8	10.8

*KSB KRT K 300-505/1206XNG-K used for all pump calculations.

NO.	DATE	REVISION	APP.

IDS Engineering Group
13430 NW. Freeway, Suite 700
Houston, Tx. 77040
713.462.3178
TxEng Firm 2726 | TxSurv Firm 10110700

SURVEYED BY: KUO & ASSOCIATES, INC.
TBPE FIRM #F-4578; TBPLS FIRM #1007560

THIS DOCUMENT IS RELEASED FOR THE PURPOSE OF REVIEW UNDER THE AUTHORITY OF MARCEL KHOUW, P.E. 101807 ON 12/17/2025. IT IS NOT TO BE USED FOR CONSTRUCTION PURPOSES.

CITY OF HOUSTON
HOUSTON PUBLIC WORKS

LIFT STATION RENEWAL AND REPLACEMENT FY 2023

MECHANICAL LS PUMP CURVE DATA TABLES (SCOTT #3)

WBS NUMBER	FOR CITY OF HOUSTON USE ONLY
R-000267-0179-4	
DRAWING SCALE	
HORIZ: VALUE VERT: VALUE	
CITY OF HOUSTON PM	
NAWARAJ PANTA, P.E.	
SHEET NO. 109 OF 321	

DWG. NO.
SCT-C-09

FILE PATH: \\dseg.com\FS\Projects\0000\005708500 CoH Lift Stations - FY 2023\CAD\DWG\PRODUCTION\109-SCOTT No 3 CURVE DATA.dwg

PLOTTED: 12/17/2025 8:10 AM
FILE PATH: \\idseg.com\FS\Projects\0000\005708500 CoH Lift Stations - FY 2023\CAD\DWG\PRODUCTION\110-SCOTT No 3 PROP BLDG.dwg

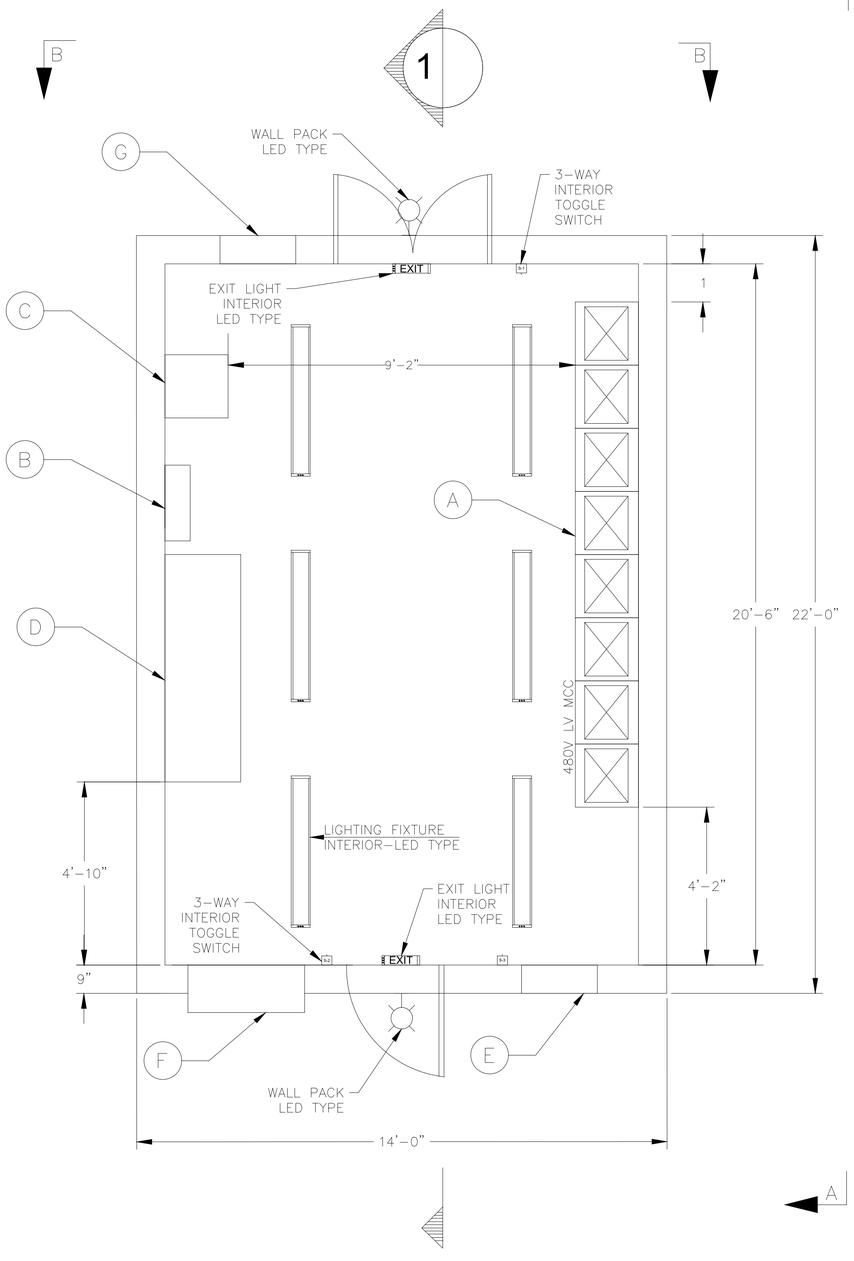

FLOOR PLAN

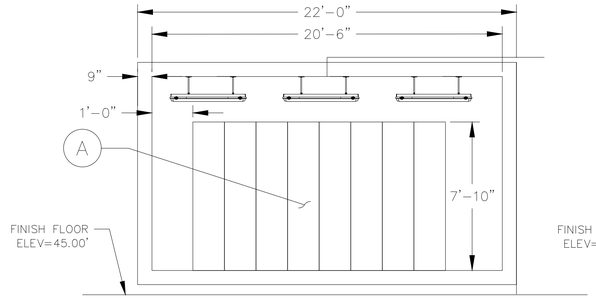

TYPICAL SECTION-1
SCALE: NTS

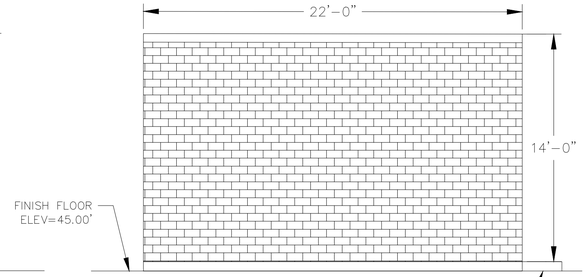

SIDE ELEVATION A
SCALE: NTS

EQUIPMENT PAD DETAIL
SCALE: NTS

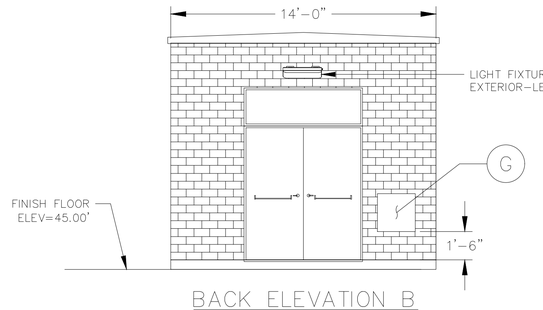

BACK ELEVATION B
SCALE: N.T.S.

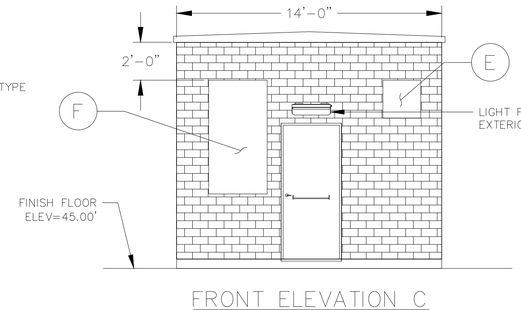

FRONT ELEVATION C
SCALE: N.T.S.

NOTES TO DESIGN ENGINEER:

A. THESE LIFT STATION DRAWINGS ARE CONSIDERED TO BE DESIGN GUIDELINES FOR THE CONSTRUCTION OF CITY OF HOUSTON WASTEWATER SUBMERSIBLE LIFT STATIONS. THEIR INTENDED USE IS A FRAMEWORK FOR THE CONTRACTED DESIGN ENGINEER IN DEVELOPING SPECIFIC LIFT STATION DESIGNS.

IT IS THE RESPONSIBILITY OF THE CONTRACTED DESIGN ENGINEER TO VERIFY THE COMPLETENESS AND ACCURACY OF THE INFORMATION HEREIN CONTAINED AND TO ADJUST ACCORDING TO SPECIFIC SITE REQUIREMENTS.

B. CONTROL BUILDINGS SHALL BE PRECAST CONCRETE. DESIGN ENGINEER IS RESPONSIBLE FOR FOUNDATION DESIGN AS REQUIRED FOR SITE SPECIFIC GEOTECHNICAL RECOMMENDATIONS.

C. THERE ARE FIVE (5) STANDARD CONTROL BUILDING CONFIGURATION COORDINATE WITH ELEVATION SHEETS FOR APPLICABLE BUILDING.

D. DESIGN ENGINEER SHALL PROVIDE A NORTH ARROW ADJACENT TO THE FLOOR PLAN.

E. THE DESIGN ENGINEER SHALL VERIFY THE STRUCTURAL ADEQUACY OF THE BUILDING DESIGN.

F. CONTROL BUILDING ELEVATION MUST COMPLY WITH THE LATEST VERSION OF THE FLOODPLAIN ORDINANCE. THE DESIGN ENGINEER IS RESPONSIBLE FOR DESIGN ELEVATED PLATFORMS AND RELATED APPURTENANCES.

G. THE DESIGN ENGINEER SHALL INCORPORATE ONLY THE NECESSARY STANDARD GUIDELINE DRAWINGS AND DETAILS INTO HIS/HER PROJECT CONTRACT DOCUMENTATION PACKAGE, AND SHALL ADJUST PAGE NUMBERS AND CROSS REFERENCE ACCORDINGLY.

H. THE DESIGN ENGINEER SHALL CONSULT THE CITY OF HOUSTON DESIGN GUIDELINES MANUAL, THE ENGINEERING DESIGN MANUAL, AND THE MASTER SPECIFICATIONS FOR FURTHER INSTRUCTIONS AND INFORMATION PERTINENT TO THESE STANDARD DESIGN GUIDELINE DRAWINGS.

I. THE DESIGN ENGINEER SHALL REMOVE THESE NOTES, ALL REFERENCES TO THESE NOTES, AND ANY OTHER EXTRANEOUS INFORMATION FROM THE DESIGN GUIDELINE DRAWINGS. DESIGN ENGINEER SHALL PROVIDE ANY NOTES OR OTHER APPROPRIATE INFORMATION NECESSARY TO COMPLETE THE LIFT STATION DESIGN.

J. WALL UNIT SHALL BE HEAVY-DUTY EXTERIOR WALL MOUNTED HEAT PUMP TYPE UNIT. WINDOW AC UNITS ARE NOT ALLOWED.

NO.	DATE	REVISION	APP.

NOTES:

1. THE BUILDING IS GENERAL PURPOSE, NON-CLASSIFIED, NON-BLAST RATED.
2. ELECTRICAL CONDUITS INTO CONTROL BUILDING SHALL BE LOCATED AND POSITIONED PRIOR TO POURING BUILDING FOUNDATION OR IF PRECAST.
3. THE HVAC UNITS SHALL BE SIZED BASED ON HEAT LOSS CALCULATIONS. COORDINATE AC/HEAT PUMP OPENING SIZE WITH SELECTED MANUFACTURE'S RECOMMENDATIONS.
4. BUILDING DOOR SHALL BE OF 316 STAINLESS STEEL TYPE.
5. THE SINGLE ENTRANCE DOORS SHALL BE 36" (WIDE) X 84" (HEIGHT).
6. THE DOUBLE ENTRANCE DOORS SHALL BE 72" (WIDE), 84" (HEIGHT), WITH 24" HIGH.
7. OPENINGS FOR BELTLESS FAN (24"X24") ON TOP OF WALL ELEVATION WITH 24"X24" LOUVER ON THE BOTTOM. BOTH UNITS SHALL BE PROVIDED WITH REMOVABLE COVERS FOR STANDBY USE.
8. FOR LIGHTING PLAN SEE SHEET ZOE05.

EQUIPMENT IDENTIFICATION LIST

ITEM	TAG NO.	DESCRIPTION
A		480V MCC
B		480 V - 240 / 120 V SINGLE PHASE POWER PANEL BOARD
C		480 V - 240 / 120 V SINGLE PHASE LIGHTING TRANSFORMER
D		CONTROL PANEL
E		EXHAUST FAN
F		WALL MOUNTED HVAC UNIT/ W SS BURGLAR BARS (NOTE J)
G		LOUVER

IDS Engineering Group
13430 NW. Freeway, Suite 700
Houston, Tx. 77040
713.462.3178
TxEng Firm 2726 | TxSurv Firm 10110700

SURVEYED BY: KUO & ASSOCIATES, INC.
TBPE FIRM #F-4578; TBPLS FIRM #1007560

THIS DOCUMENT IS RELEASED FOR THE PURPOSE OF REVIEW UNDER THE AUTHORITY OF MARCEL KHOUW, P.E. 101807 ON 12/17/2025. IT IS NOT TO BE USED FOR CONSTRUCTION PURPOSES.

CITY OF HOUSTON
HOUSTON PUBLIC WORKS

LIFT STATION RENEWAL AND REPLACEMENT FY 2023

ARCHITECTURAL PRECAST CONCRETE CONTROL BUILDING 4

WBS NUMBER	FOR CITY OF HOUSTON USE ONLY
R-000267-0179-4	
DRAWING SCALE	
HORIZ: N.T.S. VERT: N/A	
CITY OF HOUSTON PM	
NAWARAJ PANTA, P.E.	
DWG. NO. SCT-A-01	SHEET NO. 110 OF 321

PLOTTED: 12/17/2025 8:10 AM

FILE PATH: \\tdseg.com\FS\Projects\0000\005708500 CoH Lift Stations - FY 2023\CAD\DWG\PRODUCTION\111-SCOTT No 3 FRP BLDG.dwg

ITEM	DESCRIPTION
1	CORE, RIDGID CLOSED CELL, SELF-EXTINGUISHING POLYISOCYANURATE
2	DOOR, RTM MOLDED FIBERGLASS, 36" x 78" SMOOTH GEL-COAT BOTH SIDES
3	HEX HEAD BOLT, S.S., 3/8x 1 1/4, w/WASHER
4	NUTSERTS, 3/8 - 16 NC, WIDE-FLANGE ALUMINUM
5	ROOF PANEL ALUMINUM EXTRUSION
6	JOINT GASKET, 3x 1/4 POLYURETHANE SPONGE
7	FLOOR GASKET, 4x 1/4 NEOPRENE SPONGE
8	FRONT & BACK PANEL ALUMINUM EXTRUSION
9	DOOR HINGE, S.S., 2 1/2" OPEN PIANO TYPE
10	FASTENER, POP RIVET
11	DOOR GASKET, NEOPRENE HOLLOW BULB TRIM SEAL
12	LOUVRE, 6" DIA PVC W/SCREEN, ADJUSTABLE
13	LIFTING EYEBOLT - 3/4 - 10 CADMIUM PLATED
14	EYEBOLT SUPPORT, ST 6x2x1, ENCAPSULATED

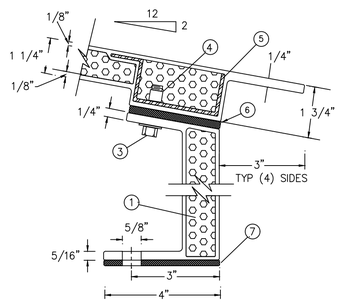

SECTION - ROOF & SIDE PANEL w/ FLANGE

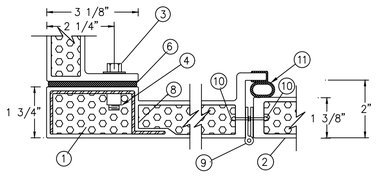

SECTION - SIDE & FRONT PANEL W/DOOR MOUNTING

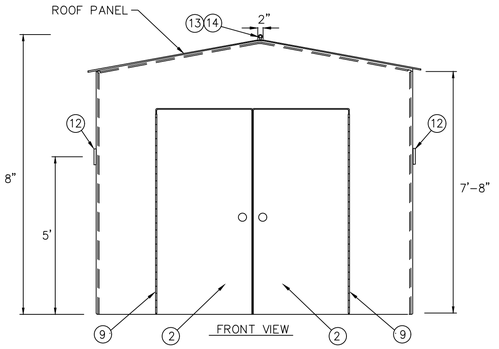

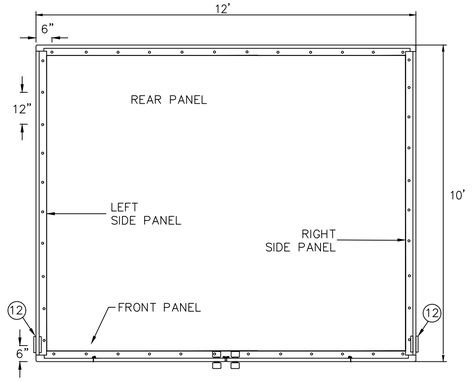

PLAN VIEW - BELOW ROOF

FERROUS SULFATE PROCESS FLOW SCHEMATIC

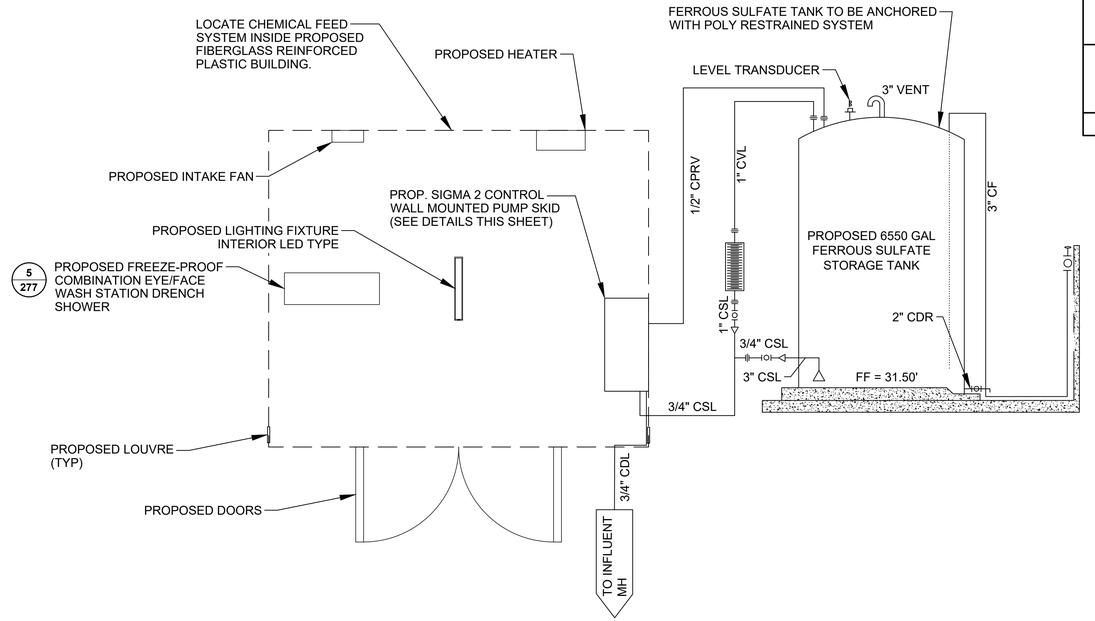

ASSMANN TANK DIMENSIONS		
CAPACITY	DIAMETER	HEIGHT
6550	119"	187"

NO.	DATE	REVISION	APP.

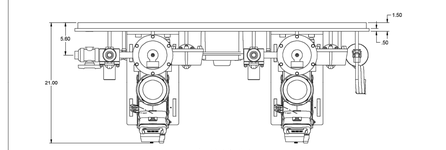

PLAN VIEW

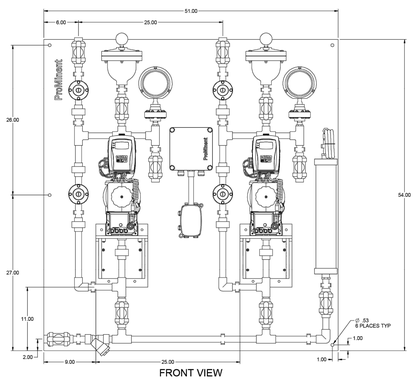

FRONT VIEW

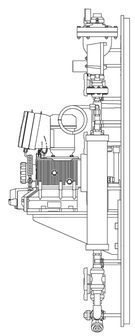

SIDE VIEW

DWG No 3022800188-200 | REV 1 | USE 3" STANDOFF ON BACK WALL

NOTES:

1. ALL PIPING AND FITTINGS SHALL BE 3/4" SCH. 80 PVC SOCKET WELD UNLESS OTHERWISE REQUIRED BY COMPONENTS.
2. SEAL MATERIAL IS VITON UNLESS OTHERWISE SPECIFIED.
3. ALL MOUNTING HARDWARE IS 316SS UNLESS SPECIFIED BY CUSTOMER.
4. ALL PIPING AND COMPONENTS SHALL BE SECURED AT BUILDERS DISCRETION AS SEEN FIT.
5. ALL INTERCONNECTING PIPING, HARDWARE, GASKETS, SEALS, AND WIRING ARE DONE ON SITE BY OTHERS.
6. ALL INTERCONNECTING PIPING SHALL BE FULLY & INDEPENDENTLY SUPPORTED BY OTHERS.
7. TOLERANCE ON ALL TERMINATION POINTS ARE +/- 3/8" (10mm) UNLESS SPECIFIED BY OTHERS.
8. PUMP MAXIMUM CAPACITY RATES BASED UPON PUMPING WATER.

TESTING:

-HYDROSTATIC TEST PRESSURE: 150 PSIG
-DESIGN OPERATING PRESSURE: 50 PSIG
-DESIGN FLOW TEST PRESSURE: 100 PSIG

TESTING CONDITIONS:

-TEST TYPE: HYDROSTATIC
-TEST MEDIUM WATER
-TEST TEMPERATURE: AMBIENT 68F (20C)
-TEST DURATION: 30 MIN. (MINIMUM)

CHEMICAL SERVICE:

-ALUM

NETWORK NUMBERS:

-MECHANICAL: 1107954
-ELECTRICAL: 1107955
-SPARE PARTS: 1107957

REV	DATE	DESCRIPTION	BY	APPROVED
1	04/27/23	AS BUILT	ALS	
0	08/04/22	RELEASED FOR PRODUCTION	ALS	
A	06/29/22	FIRST ISSUE	ALS	

REVISIONS

CUSTOMER

JOB No 3022800188 | PURCHASE ORDER No 2388-10283-6464

TITLE: ALUM FEED SKID
GENERAL ARRANGEMENT DRAWING

THIS DRAWING IS THE PROPERTY OF PROMINENT FLUID CONTROLS INC. AND SHALL NOT BE COPIED OR TRANSFERRED WITHOUT THE WRITTEN CONSENT OF PROMINENT FLUID CONTROLS INC.

ENGINEERS SEAL

ProMinent® THE PROMINENT GROUP OF COMPANIES

PITTSBURGH, PA USA WWW.PROMINENT.US

PROMINENT FLUID CONTROLS INC.
REC PARK WEST
135 INDUSTRY DRIVE,
PITTSBURGH PA., USA. 15275
TEL: 412 787 2484 FAX: 412 787 9704

DESIGNED	ALS	APPROVED	SK
DRAWN	ALS	SCALE	N.T.S.
CHECKED	EL	DATE	06/29/22

DWG No 3022800188-200 | REV 1 | PAGE 1/2

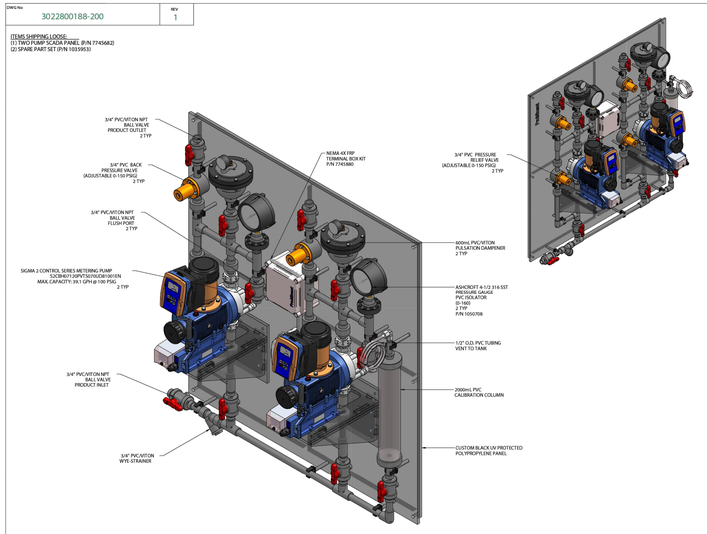

DWG No 3022800188-200 | REV 1

ITEMS SHIPPING LOOSE:
(1) TWO PUMP SCADA PANEL (P/N 7745682)
(2) SPARE PART SET (P/N 10339553)

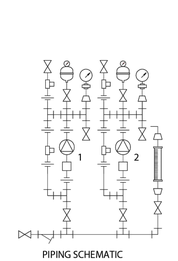

PIPING SCHEMATIC

REV	DATE	DESCRIPTION	BY	APPROVED
1	04/27/23	AS BUILT	ALS	
0	08/04/22	RELEASED FOR PRODUCTION	ALS	
A	06/29/22	FIRST ISSUE	ALS	

REVISIONS

CUSTOMER

JOB No 3022800188 | PURCHASE ORDER No 2388-10283-6464

TITLE: ALUM FEED SKID
GENERAL ARRANGEMENT DRAWING

THIS DRAWING IS THE PROPERTY OF PROMINENT FLUID CONTROLS INC. AND SHALL NOT BE COPIED OR TRANSFERRED WITHOUT THE WRITTEN CONSENT OF PROMINENT FLUID CONTROLS INC.

ENGINEERS SEAL

ProMinent® THE PROMINENT GROUP OF COMPANIES

PITTSBURGH, PA USA WWW.PROMINENT.US

PROMINENT FLUID CONTROLS INC.
REC PARK WEST
135 INDUSTRY DRIVE,
PITTSBURGH PA., USA. 15275
TEL: 412 787 2484 FAX: 412 787 9704

DESIGNED	ALS	APPROVED	SK
DRAWN	ALS	SCALE	N.T.S.
CHECKED	EL	DATE	06/29/22

DWG No 3022800188-200 | REV 1 | PAGE 2/2

IDS Engineering Group
13430 NW. Freeway, Suite 700
Houston, Tx. 77040
713.462.3178
TxEng Firm 2726 | TxSurv Firm 10110700

SURVEYED BY: KUO & ASSOCIATES, INC.
TBPE FIRM #F-4578; TBPLS FIRM #1007560

THIS DOCUMENT IS RELEASED FOR THE PURPOSE OF REVIEW UNDER THE AUTHORITY OF MARCEL KHOUW, P.E. 101807 ON 12/17/2025. IT IS NOT TO BE USED FOR CONSTRUCTION PURPOSES.

CITY OF HOUSTON
HOUSTON PUBLIC WORKS

LIFT STATION RENEWAL AND REPLACEMENT FY 2023

SCOTT #3 LIFT STATION FRP BUILDING DETAIL

WBS NUMBER	FOR CITY OF HOUSTON USE ONLY
R-000267-0179-4	
DRAWING SCALE	
HORIZ: N.T.S. VERT: N/A	
CITY OF HOUSTON PM	
NAWARAJ PANTA, P.E.	
SHEET NO. 111 OF 321	

DWG. NO. SCT-A-02

PLOTTED: 12/17/2025 8:11 AM

FILE PATH: \\idseg.com\FS\Projects\0000\005708500 CoH Lift Stations - FY 2023\CAD\DWG\PRODUCTION\112-SCOTT No 3 RECORD DWG.dwg

NO.	DATE	REVISION	APP.

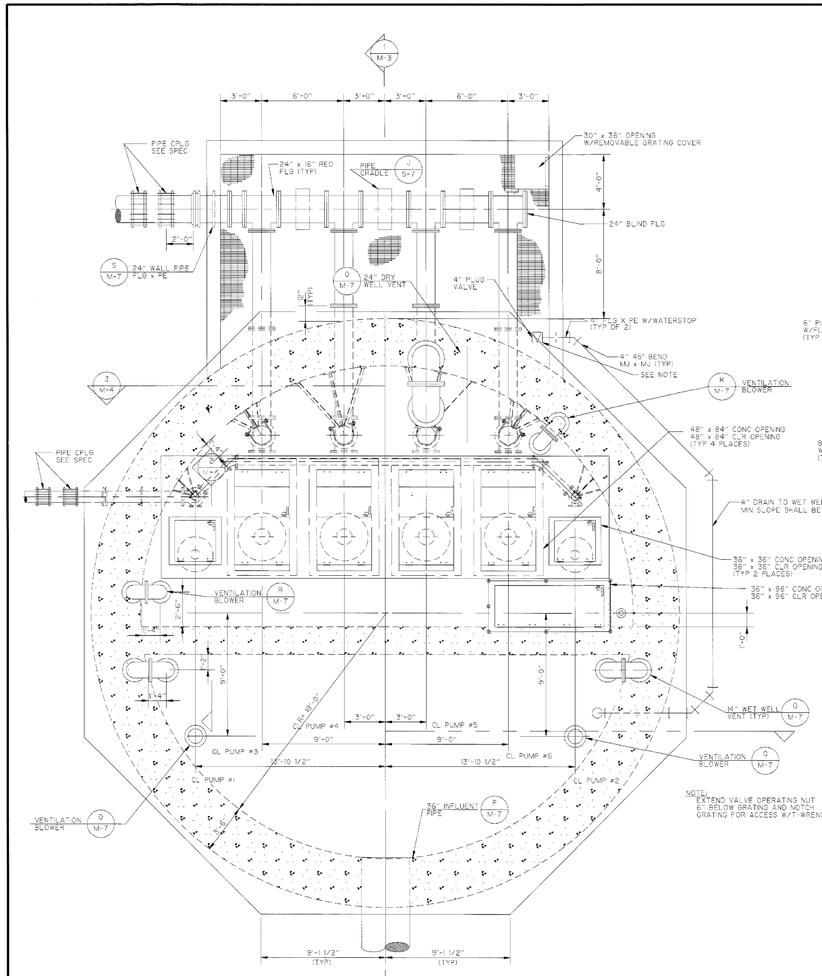

PLAN AT ELEVATION 45.00

PLAN

1/4" = 1'-0"

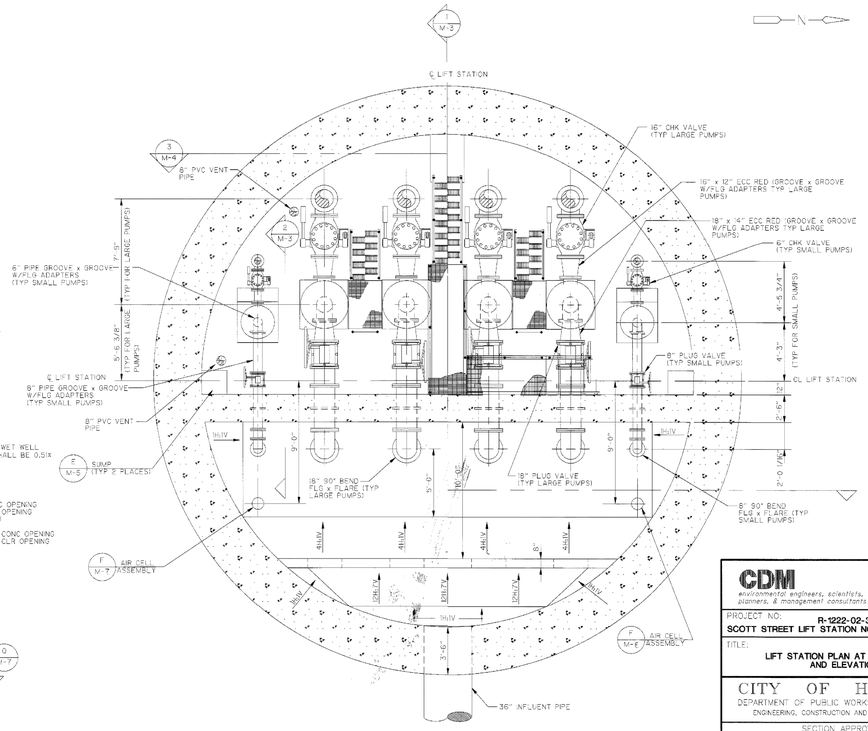

PLAN AT ELEVATION 4.56

PLAN

1/4" = 1'-0"

SEE COMMENT ON SHEET 4 OF 6

DRAWING NEED NOT REFLECT AS-BUILT CONDITION

THE SEAL APPEARING ON THIS DOCUMENT WAS AUTHORIZED BY DOMENIC DICENSO P.E. 53093 ON OCT 12, 1995

SEAL:

DOMENIC DICENSO
53093
LICENSED
PROFESSIONAL
ENGINEER

CADD DWG FILE NO: SCOTM-02.DWG

COHSTD.BDR

0 1 2 3

ORIGINAL SCALE IN INCHES FOR REDUCED PLANS

REV. NO.	DESCRIPTION	APP'D	DATE

CDM
environmental engineers, scientists, planners, & management consultants

PROJECT NO: R-1222-02-3
SCOTT STREET LIFT STATION NO 3 AND FORCE MAIN

TITLE: LIFT STATION PLAN AT ELEVATION 45.00 AND ELEVATION 4.56

CITY OF HOUSTON
DEPARTMENT OF PUBLIC WORKS AND ENGINEERING
ENGINEERING, CONSTRUCTION AND REAL ESTATE GROUP

SECTION APPROVALS

WATER DESIGN	TRAFFIC AND SIGNAL DESIGN
STORM SEWER DESIGN	STREET, BRIDGE & ROW
WASTEWATER DESIGN	CONSTRUCTION

OTHER DEPARTMENTS

PLANNING AND DEVELOPMENT	
CITY ENGINEER	DATE
DIRECTOR OF PUBLIC WORKS AND ENGINEERING	DATE

SUBMITTED:	DESIGNED BY: J. BONURA
SCALE: AS NOTED	DRAWN BY: J. ALCINA
DATE: SEPT, 1995	SHEET M-2 SHEET 42 OF 61 SHEETS
SURVEY BY:	DWG NO: 32045
F.B NO:	

FOR REFERENCE ONLY

IDS Engineering Group
13430 NW. Freeway, Suite 700
Houston, Tx. 77040
713.462.3178
TxEng Firm 2726 | TxSurv Firm 10110700

SURVEYED BY: KUO & ASSOCIATES, INC.
TBPE FIRM #F-4578; TBPLS FIRM #1007560

THIS DOCUMENT IS RELEASED FOR THE PURPOSE OF REVIEW UNDER THE AUTHORITY OF MARCEL KHOUW, P.E. 101807 ON 12/17/2025. IT IS NOT TO BE USED FOR CONSTRUCTION PURPOSES.

CITY OF HOUSTON
HOUSTON PUBLIC WORKS

LIFT STATION RENEWAL AND REPLACEMENT FY 2023

EXISTING LIFT STATION RECORD DRAWING (SHEET 1 OF 2)

WBS NUMBER	FOR CITY OF HOUSTON USE ONLY
R-000267-0179-4	
DRAWING SCALE	
HORIZ: N/A VERT: N/A	
CITY OF HOUSTON PM	
NAWARAJ PANTA, P.E.	
SHEET NO. 112 OF 321	

DWG. NO.
SCT-C-10

PLOTTED: 12/17/2025 8:11 AM
FILE PATH: \\idseg.com\FS\Projects\0000\005708500 CoH Lift Stations - FY 2023\CAD\DWG\PRODUCTION\113-SCOTT No 3 RECORD DWG.dwg

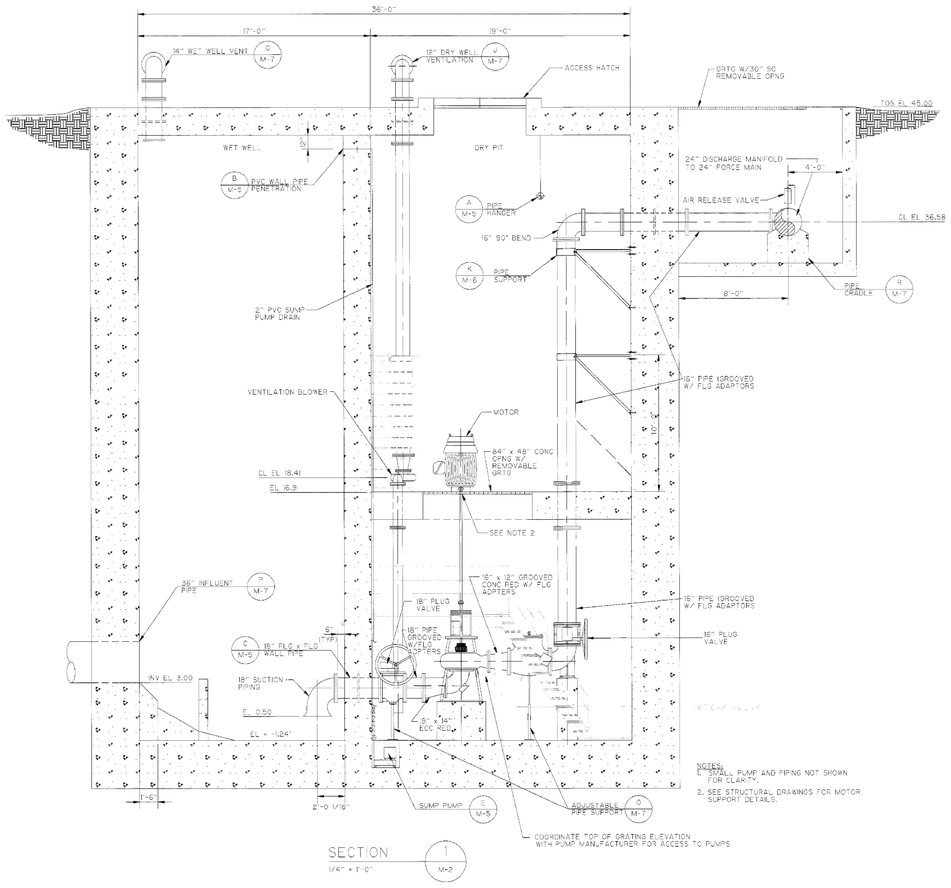

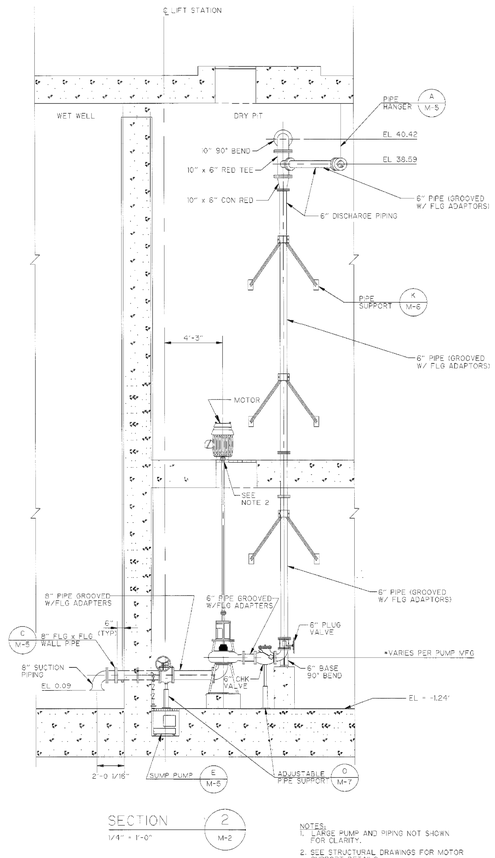

PIPING IN LIFT STATION WAS CHANGED BY SUBMITTAL 25A SHOWN ON THE FOLLOWING TWO DRAWINGS BY COHEN INDUSTRIAL SUPPLY.
~~DRAWING CLAIM "NOT RELIANT"~~
AS-BUILT CONDITION

SEAL:
DOMENIC DICENSO 53093 STATE OF TEXAS

THE SEAL APPEARING ON THIS DOCUMENT WAS AUTHORIZED BY DOMENIC DICENSO P.E. 53093 ON OCT 12, 1995

CADD DWG FILE NO: SCOTM-3.DWG

COHSTD.BDR

0 1 2 3 ORIGINAL SCALE IN INCHES FOR REDUCED PLANS

NO.	DATE	REVISION	APP.

REV NO	DESCRIPTION	APP'D	DATE

CDM
environmental engineers, scientists, planners, & management consultants

PROJECT NO: R-1222-02-3
SCOTT STREET LIFT STATION NO 3 AND FORCE MAIN

TITLE: LIFT STATION SECTIONS

CITY OF HOUSTON
DEPARTMENT OF PUBLIC WORKS AND ENGINEERING
ENGINEERING, CONSTRUCTION AND REAL ESTATE GROUP

SECTION APPROVALS

WATER DESIGN	TRAFFIC AND SIGNAL DESIGN
STORM SEWER DESIGN	STREET, BRIDGE & ROW
WASTEWATER DESIGN	CONSTRUCTION

OTHER DEPARTMENTS

PLANNING AND DEVELOPMENT	
CITY ENGINEER	DATE
DIRECTOR OF PUBLIC WORKS AND ENGINEERING	DATE

SUBMITTED:	DESIGNED BY: J. BONURA
SCALE: AS NOTED	DRAWN BY: J. ALCINA
DATE: SEPT. 1995	SHEET M-3 SHEET 43 OF 61 SHEETS
SURVEY BY:	DWG NO: 32045
F B NO:	

IDS Engineering Group
13430 NW. Freeway, Suite 700
Houston, Tx. 77040
713.462.3178
TxEng Firm 2726 | TxSurv Firm 10110700

SURVEYED BY: KUO & ASSOCIATES, INC.
TBPE FIRM #F-4578; TBPLS FIRM #1007560

THIS DOCUMENT IS RELEASED FOR THE PURPOSE OF REVIEW UNDER THE AUTHORITY OF MARCEL KHOUW, P.E. 101807 ON 12/17/2025. IT IS NOT TO BE USED FOR CONSTRUCTION PURPOSES.

CITY OF HOUSTON
HOUSTON PUBLIC WORKS

LIFT STATION RENEWAL AND REPLACEMENT FY 2023

EXISTING LIFT STATION RECORD DRAWING (SHEET 2 OF 2)

WBS NUMBER	FOR CITY OF HOUSTON USE ONLY
R-000267-0179-4	
DRAWING SCALE	
HORIZ: N/A VERT: N/A	
CITY OF HOUSTON PM	
NAWARAJ PANTA, P.E.	
SHEET NO. 113 OF 321	

DWG. NO.
SCT-C-11

FOR REFERENCE ONLY

RAISED SLAB

EXPLODED 3D MODEL OF STRUCTURE
IS ONLY FOR VISUAL REFERENCE, AND
SHALL NOT BE USED TO GATHER
STRUCTURAL INFORMATION

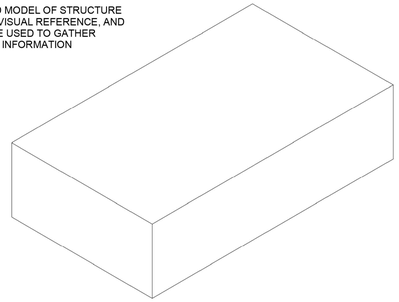

STRUCTURAL SLAB

ISOMETRIC 3D MODEL OF STRUCTURE
IS ONLY FOR VISUAL REFERENCE, AND
SHALL NOT BE USED TO GATHER
STRUCTURAL INFORMATION

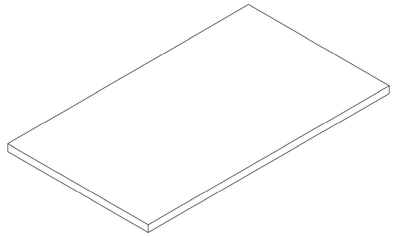

BEAMS

ISOMETRIC 3D MODEL OF STRUCTURE
IS ONLY FOR VISUAL REFERENCE, AND
SHALL NOT BE USED TO GATHER
STRUCTURAL INFORMATION

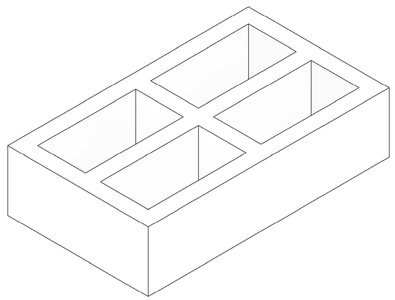

STRAIGHT SHAFTS

ISOMETRIC 3D MODEL OF STRUCTURE
IS ONLY FOR VISUAL REFERENCE, AND
SHALL NOT BE USED TO GATHER
STRUCTURAL INFORMATION

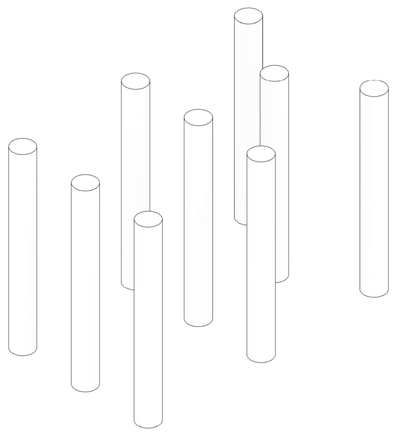

PREFAB BUILDING BY OTHERS

ISOMETRIC 3D MODEL OF STRUCTURE
IS ONLY FOR VISUAL REFERENCE, AND
SHALL NOT BE USED TO GATHER
STRUCTURAL INFORMATION

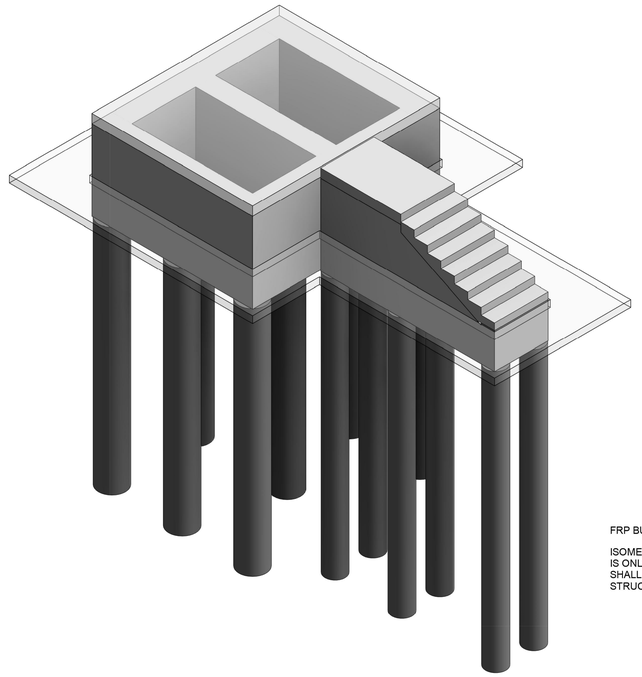

FRP BUILDING

ISOMETRIC 3D MODEL OF STRUCTURE
IS ONLY FOR VISUAL REFERENCE, AND
SHALL NOT BE USED TO GATHER
STRUCTURAL INFORMATION

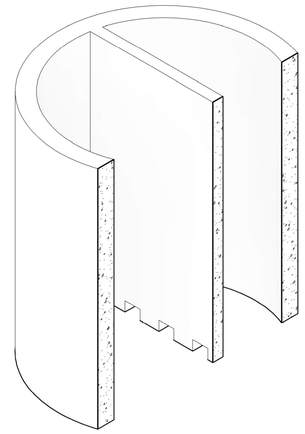

LIFT STATION

ISOMETRIC 3D MODEL OF STRUCTURE
IS ONLY FOR VISUAL REFERENCE, AND
SHALL NOT BE USED TO GATHER
STRUCTURAL INFORMATION

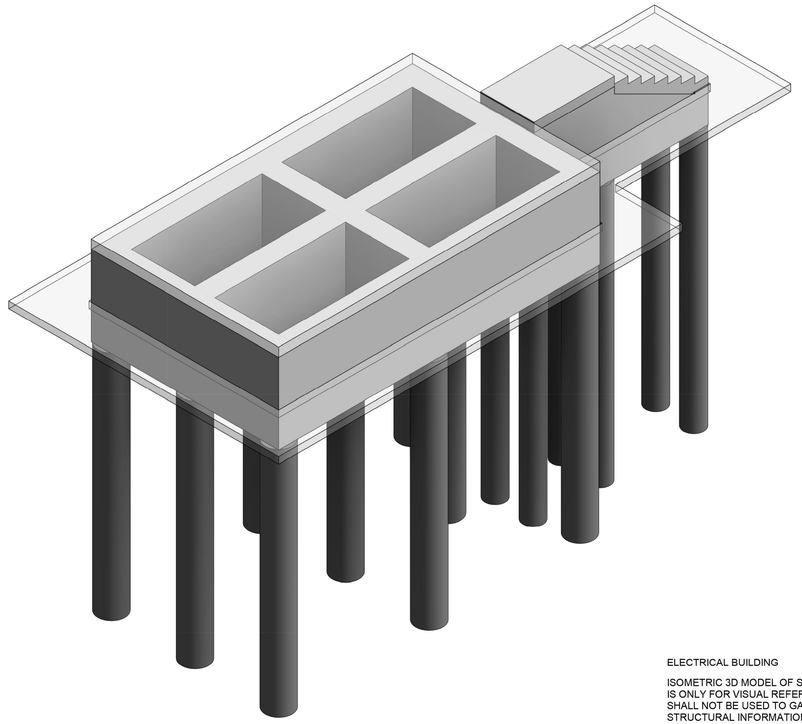

ELECTRICAL BUILDING

ISOMETRIC 3D MODEL OF STRUCTURE
IS ONLY FOR VISUAL REFERENCE, AND
SHALL NOT BE USED TO GATHER
STRUCTURAL INFORMATION

NO.	DATE	REVISION	APP.

P.E. SEAL
REQUIRED

PRELIMINARY

SUBJECT TO REVISION

This document is released for informational purposes under the authority of DAVID MOORE P.E. 139405 on 12/11/2025 It is not to be used for regulatory approval, permit, bidding, or construction purposes.

CONCEPT ENGINEERS
TX. FIRM REGISTRATION # F-04417
Structures for the whole community

IDS Engineering Group
13430 NW. Freeway
Suite 700
Houston, Tx. 77040
713.462.3178
TxEng Firm 2726
TxSurv Firm 10110700

CITY OF HOUSTON
HOUSTON PUBLIC WORKS

LIFT STATION RENEWAL
AND REPLACEMENT FY 2023

COVER SHEET – 3D MODEL

WBS NUMBER	FOR CITY OF HOUSTON USE ONLY
R-000267-0179-4	
DRAWING SCALE	
AS NOTED	
CITY OF HOUSTON PM	
NAWARAJ PANTA, P.E.	

DWG. NO.	SHEET NO.
SCT-S-01	114 OF 321

DESIGN CRITERIA

1. DESIGN CODE INTERNATIONAL BUILDING CODE 2021 WITH CITY OF HOUSTON AMENDMENTS

2. DESIGN LOADS:

   A. LIVE LOADS: (PSF)DEAD LOADS

SLABS OF GRADE	100	PSF	GENERATOR WEIGHT		XX LBS
STORAGE & MECHANICAL	150	PSF	ELECTRICAL BUILDING WEIGHT		XXLBS

   B. DEAD LOADS (SUPERIMPOSED)

SLABS OF GRADE	15	PSF
STORAGE & MECHANICAL	15	PSF

	UNIFORM LOADS	CONCENTRATED LOADS
STAIRS & EXISTING WAY	100 PSF	300 LBS
HANDRAILS & GUARD RAILS	50 LB/FT	200 LBS

3. WIND SPEED 147 MPH 3 SEC. GUST (ULTIMATE)
   EXPOSURE CATEGORY "C"
   RISK CATEGORY III
   DESIGN WIND FORCE ON FRP BUILDING XX LBS
   DESIGN WIND FORCE ON ELECTRICAL BUILDING XX LBS

GENERAL NOTES

1. THE CONTRACTOR SHALL COMPARE THE STRUCTURAL DRAWINGS WITH THE ARCHITECTURAL, CIVIL, PLUMBING, MECHANICAL AND ELECTRICAL DRAWINGS AS TO LAYOUT DIMENSIONS AND ELEVATIONS. ALL DISCREPANCIES, IF ANY ARE FOUND, SHALL BE REPORTED TO THE ARCHITECT FOR PROPER ADJUSTMENT BEFORE PROCEEDING WITH WORK. ANY DISCREPANCIES WITH THE STRUCTURAL DOCUMENTS SHALL BE IMMEDIATELY BROUGHT TO THE ATTENTION OF THE ARCHITECT/ENGINEER PRIOR TO THE SUBMISSION OF BIDS OF PROPOSALS, BEFORE COMMENCING THE WORK IN QUESTION. NO FIELD CHANGES OR DEVIATIONS FROM THE DESIGN ARE TO BE MADE WITHOUT PRIOR WRITTEN APPROVAL OF THE ARCHITECT AND/OR STRUCTURAL ENGINEER. NO CHANGE ORDER CONSIDERATION WILL BE GIVEN TO CHANGES FOR WHICH THE ARCHITECT AND/OR ENGINEER WERE NOT CONTACTED PRIOR TO CONSTRUCTION OF THE AFFECTED ITEM.

2. IN THE EVENT THAT CERTAIN FEATURES OF THE CONSTRUCTION ARE NOT FULLY SHOWN IN THE DRAWING OR CALLED OUT IN THE STRUCTURAL NOTES OR IN THE SPECIFICATIONS, THEN SUCH CONSTRUCTION SHALL BE IN THE SAME CHARACTER FOR SIMILAR CONDITIONS THAT ARE SHOWN OR CALLED FOR.

3. SEE ARCHITECTURAL DRAWINGS FOR FLOOR ELEVATIONS, SLOPE, AND THE LOCATION OF DEPRESSED FLOOR AREAS, AND OTHER REQUIREMENTS AT COLUMNS, WALLS, STAIRWELLS, SLABS, ETC. THE CONTRACTOR SHALL COMPARE THE STRUCTURAL SECTIONS WITH THE ARCHITECTURAL SECTIONS AND REPORT ANY DISCREPANCY TO THE ARCHITECT PRIOR TO FABRICATING OR INSTALLING STRUCTURAL MEMBERS.

4. PRINCIPAL OPENINGS THROUGH THE FRAMING ARE SHOWN ON DRAWINGS. THE CONTRACTOR SHALL EXAMINE THE ARCHITECTURAL AND MECHANICAL DRAWINGS FOR THE REQUIRED OPENINGS AS HE SHALL PROVIDE FOR ALL OPENINGS WHETHER SHOWN ON THE DRAWINGS OR NOT AND SHALL VERIFY SIZE AND LOCATION OF ALL OPENINGS WITH THE MECHANICAL CONTRACTOR. ANY DEVIATION FROM THE OPENINGS SHOWN ON THE STRUCTURAL DRAWINGS SHALL BE BROUGHT TO THE ENGINEER'S ATTENTION FOR APPROVAL.

5. REFER TO THE SPECIFICATIONS PROVIDED WITH THIS SUBMITTAL FOR THE REQUIRED STRUCTURAL SUBMITTALS THAT MUST BE SUBMITTED FOR E.O.R. REVIEW.

6. SPECIFICATIONS ARE PART OF THE CONSTRUCTION DOCUMENTS AND MUST BE USED IN CONJUNCTION WITH THE DRAWINGS.

7. DETAILS LABELED "TYPICAL DETAILS" ON DRAWINGS APPLY TO SITUATIONS OCCURRING ON THE PROJECT THAT ARE THE SAME OR SIMILAR TO THOSE SPECIFICALLY DETAILED, SUCH DETAILS APPLY WHETHER OR NOT THEY ARE REFERENCED AT EACH LOCATION. NOTIFY E.O.R. OF CONFLICTS REGARDING APPLICABILITY OF "TYPICAL DETAILS".

8. DO NOT LOAD THE SLAB ON GRADE WITH ERECTION CRANES OR ERECTION EQUIPMENT. THE SLAB HAS NOT BEEN DESIGNED FOR CRANE LOADS AND WILL REQUIRE AN INCREASE OF THICKNESS AND/OR REINFORCEMENT. OBTAIN E.O.R. APPROVAL ON PROPOSED CRANE SUPPORT PLAN FOR SLABS PRIOR TO COMMENCING WORK.

9. DO NOT STORE OR STACK CONSTRUCTION MATERIALS ON POURED OR ERECTED FLOOR/ROOFS IN EXCESS OF 80 PERCENT OF LIVE LOAD. CONTRACTOR SHALL ENSURE THAT ALL SUB-CONTRACTORS ARE INFORMED OF LOAD RESTRICTIONS. AVOID IMPACT WHEN PLACING MATERIALS OF POURED OR ERECTED SLABS FLOOR OR ROOF.

10. THE CONTRACT STRUCTURAL DOCUMENTS REPRESENT THE FINISHED STRUCTURE. THE CONTRACTOR IS RESPONSIBLE FOR THE MEANS OR METHODS OF CONSTRUCTION, PROVIDE ALL MEASURES REQUIRED TO PROTECT THE STRUCTURE, WORKMEN AND OTHER PERSONS DURING CONSTRUCTION; INCLUDING SHORING FOR CONSTRUCTION EQUIPMENT, SHORING FOR THE BUILDING, FORMS AND SCAFFOLDING, SHORING FOR THE RETAINING WALLS AND OTHER TEMPORARY SUPPORTS REQUIRED.

11. ALL STAIR MEMBERS INCLUDING, BUT NOT LIMITED TO, STRINGERS AND HANDRAILS SHALL BE DESIGNED BY STAIR ENGINEER AND STEEL FABRICATOR.

12. SHOP DRAWINGS AND OTHER ITEMS SHALL BE SUBMITTED TO THE ENGINEER FOR REVIEW PRIOR TO FABRICATION. ALL SHOP DRAWINGS SHALL BE REVIEWED BY THE GENERAL CONTRACTOR BEFORE SUBMITTAL. THE ENGINEER'S REVIEW IS TO BE FOR CONFORMANCE WITH THE DESIGN CONCEPT AND GENERAL COMPLIANCE WITH THE RELEVANT CONTRACT DOCUMENTS. THE ENGINEER'S REVIEW DOES NOT RELIEVE THE CONTRACTOR OF THE SOLE RESPONSIBILITY TO REVIEW, CHECK AND COORDINATE THE SHOP DRAWINGS PRIOR TO SUBMISSION. THE CONTRACTOR REMAINS SOLELY RESPONSIBLE FOR ERRORS AND OMISSIONS ASSOCIATED WITH THE PREPARATION OF SHOP DRAWINGS AS THEY PERTAIN TO MEMBER SIZES, DETAILS, DIMENSIONS, ETC.

13. SHOP DRAWINGS SHALL BE PREPARED WITH SUFFICIENT DETAIL AND NOTATION FOR FIELD ERECTION AND INSTALLATION. PHOTO COPIES OF THE CONTRACT DRAWINGS FOR USE AS SHOP DRAWINGS WILL NOT BE PERMITTED.

FOUNDATION NOTES

1. THE FOUNDATION SYSTEM HAS BEEN DESIGNED BASED ON THE FOLLOWING RECOMMENDATIONS SPECIFIED IN THE GEOTECHNICAL INVESTIGATION REPORT NUMBER HGT2210460.1.1 (B) BY HVJ ASSOCIATES, INC., DATED 10/24/2025, THE FOUNDATION SYSTEM IS DRILLED STRAIGHT SHAFTS AND AND HAS BEEN DESIGNED USING THE CAPACITIES THAT CAN BE FOUND IN THE GEOTECHNICAL REPORT. REFER TO PLAN FOR TOTAL DEPTH BELOW EXISTING GRADE. CONCRETE SHOULD BE PLACED IN THE DRILLED HOLES WITHIN FOUR HOURS OF EXCAVATION TO REDUCE THE RISK OF GROUNDWATER SEEPAGE, DETERIORATION OF THE FOUNDATION BEARING SURFACE AND UNDERREAM COLLAPSE. REFER TO THE GEOTECHNICAL REPORT.

2. THE CONTRACTOR MUST OBTAIN A COPY OF THE GEOTECHNICAL REPORT DESCRIBED ABOVE AND FOLLOW ALL RECOMMENDATIONS IN REGARDS TO SOIL PREPARATION, COMPACTION, REMOVAL AND FILL REQUIREMENTS AS NECESSARY TO ACHIEVE THE DESIGN SOIL BEARING PRESSURE CAPACITY IF REQUIRED.

3. IN GENERAL SITE PREPARATION SHOULD CONSIST OF REMOVING ANY EXISTING FOUNDATIONS, PAVED AREAS, GRASS, TREE ROOTS, AND STRIPPING ORGANIC TOP SOILS. THE EXPOSED SUBGRADE SHOULD BE PROOF-ROLLED TO DETECT LOCAL WEAK AREAS WHICH SHOULD BE EXCAVATED, PROCESSED, AND RECOMPACTED IN LOOSE LIFTS OF APPROXIMATELY EIGHT-INCH THICKNESS. IN FLOOR SLAB, SUBGRADE SOILS SHOULD BE COMPACTED TO A MINIMUM OF 95% OR THE PROCTOR MAXIMUM DRY DENSITY (ASTM D698) AT A MOISTURE CONTENT WITHIN -1% TO +3% OF MAXIMUM MOISTURE. TREE STUMPS, IF PRESENT, SHOULD BE REMOVED BELOW FLOOR SLAB OR PAVEMENT GRADE, AND REMOVE 2 FEET OF EXISTING SOIL AND REPLACE WITH SELECTED FILL AS PER CITY OF HOUSTON STANDARD CONSTRUCTION SPECIFICATIONS. REFER TO GEOTECHNICAL REPORT.

4. SEE CIVIL DRAWINGS FOR ALL EXTERIOR SLABS AND CURBS AND LIMITS OF EXCAVATION.

5. DURING THE PLACEMENT AND FINISHING OF SLAB, USE FOGGING OR MISTING EQUIPMENT TO APPLY MOISTURE TO THE SLAB AREAS UNTIL FINAL CURING HAS BEGUN TO AVOID EXCESSIVELY RAPID EVAPORATION OF WATER FROM THE SLAB. DO NOT USE SPRAY WATER BOTTLES THAT APPLY LARGE AMOUNTS OF WATER THE SLAB SURFACE

6. FOR ALL REINFORCED CONCRETE FOUNDATION MEMBERS, CONTRACTOR SHALL FOLLOW ALL THE APPLICABLE ITEMS ON THE "REINFORCED CONCRETE NOTES:".

7. PROTECT PIPES AND CONDUITS RUNNING THROUGH WALLS AND SLABS WITH 1/2" EXPANSION MATERIAL.

8. DO NOT PLACE FOOTINGS OR SLABS AGAINST SUBGRADE CONTAINING FREE WATER.

9. MAINTAIN PROPER SITE DRAINAGE DURING CONSTRUCTION TO ENSURE SURFACE RUNOFF AWAY FROM STRUCTURES AND TO PREVENT PONDING OF SURFACE RUNOFF NEAR THE STRUCTURES.

10. KEEP OPEN EXCAVATIONS AROUND BUILDING DRY, BACKFILL AGAINST FOUNDATIONS AND GRADE BEAMS AS SOON AS PRACTICAL. PUMP WATER OUT OF OPEN EXCAVATIONS OF FLOODING PRIOR TO BACKFILLING.

REINFORCED CONCRETE NOTES

1. DETAILING OF CONCRETE REINFORCEMENT AND ACCESSORIES SHALL BE IN ACCORDANCE WITH ACI PUBLICATION 315, LATEST EDITION.

2. CONCRETE REINFORCING SHALL CONFORM TO THE REQUIREMENTS OF ASTM A-615, GRADE 60. WELDED WIRE FABRIC SHALL BE IN ACCORDANCE WITH ASTM A-185.

3. CONCRETE IN ALL AREAS SHALL HAVE SAND AND GRAVEL AGGREGATE CEMENT CONFORMING TO ASTM C 150, TYPE I, AND DESIGNATED COMPRESSIVE STRENGTH (f'c) AT 28 DAYS AS CALLED OUT IN NOTE #4 BELOW. ALSO SEE PROJECT SPECIFICATIONS FOR DIFFERENT AGGREGATE AND COMPRESSIVE STRENGTH REQUIREMENTS.

4. UNLESS NOTED OTHERWISE, CONCRETE SHALL MEET OR EXCEED THE MINIMUM COMPRESSIVE STRENGTH REQUIREMENTS AT 28 DAYS:

   A. CONCRETE DESIGN STRENGTH:

      a. GRADE BEAMS & SLABS ON GRADE: f'c = 4,000 PSI

      b. PIER CAPS, WALLS, STAIRS & ANY OTHER NOT NOTED: f'c = 4,000 PSI

      c. PIERS: f'c = 4,000 PSI

   B. CONCRETE COVER REINFORCEMENT COVER SHALL MEET THE FOLLOWING REQUIREMENTS (UNLESS SPECIFICALLY OTHERWISE IN PLANS):

      a. SLAB ON GRADE 1" TOP

      b. GRADE BEAMS 1 1/2" TOP, 3" BOTTOM, 2" SIDES

      c. DRILLED PIERS 3" ALL SURFACES

      d. COLUMNS 1 1/2" ALL SURFACES

   (SEE SECTION 20.6 ACI 318-19 FOR CONDITIONS NOT NOTED.

5. FLY ASH MAY BE USED TO REPLACE A PORTION OF THE PORTLAND CEMENT, THE RATIO OF FLY ASH TO THE TOTAL OF THE FLY ASH AND CEMENT IN A MIX SHALL NOT EXCEED 20%. FLY ASH SHALL CONFORM TO ASTM C618, TYPE C OR F.

6. IT SHALL BE THE RESPONSIBILITY OF THE CONTRACTOR TO COORDINATE WITH THE CONCRETE SUPPLIER TO ENSURE A PUMPABLE AND WORKABLE MIX. TESTING LAB WILL CONTROL SLUMP AND ONLY TESTING LAB CAN ADD WATER ON JOB SITE. CONCRETE SUPPLIER WILL INFORM TESTING LAB/CONTRACTOR OF MAXIMUM WATER ALLOWABLE THAT CAN BE ADDED ON JOB SITE BEFORE W/C RATIO IS EXCEEDED. THE USE OF PLASTICIZERS, RETARDANTS AND OTHER ADDITIVES SHALL BE AT THE OPTION OF THE CONTRACTOR SUBJECT TO THE APPROVAL OF THE STRUCTURAL ENGINEER. FOLLOW THE RECOMMENDATIONS OF THE MANUFACTURER FOR THE PROPER USE OF ADDITIVES. THE USE OF CALCIUM CHLORIDE OR OTHER CHLORIDE BEARING SALTS SHALL NOT BE PERMITTED.

7. CONCRETE SLUMP TESTS SHALL BE MADE BEFORE AND AFTER THE ADDITION OF ADMIXTURES AND MAY BE TAKEN AT THE BACK OF THE TRUCK. CONCRETE FOR THE PREPARATION OF TEST CYLINDERS SHALL BE TAKEN FROM THE HOSE END FOR CONCRETE PLACED BY PUMP.

8. ALL REINFORCING STEEL SHALL BE LAPPED PER THE LATEST EDITION OF THE ACI-318-19. SPLICES. CORNERS AND INTERSECTIONS WITH STANDARD 90 DEGREE BEND OR CORNER BARS. LAP TOP BARS AT CENTER OF SPAN. LAP WELDED WIRE MESH ONE FULL MESH AT SIDE AND END LAPS. DO NOT LAP OR WELD REINFORCEMENT IN THE FIELD UNLESS SPECIFICALLY SHOWN ON STRUCTURAL DRAWINGS OR APPROVED BY E.O.R. WHEN SPECIFICALLY APPROVED, PROVIDE WELDED REINFORCEMENT IN ACCORDANCE WITH ASTM A706. USE LOW HYDROGEN ELECTRODES FOR WELDING OF REINFORCEMENT IN CONFORMANCE WITH "WELDING STEEL, METAL INSERTS AND CONNECTIONS IN REINFORCED CONCRETE CONSTRUCTION" AMERICAN WELDING SOCIETY AWS D1.4 WHERE REQUIRED, PROVIDE DOWELS TO MATCH SIZE AND SPACING OF MAIN REINFORCING.

9. REFER TO ARCHITECTURAL, MECHANICAL, ELECTRICAL AND PLUMBING DRAWINGS FOR ANY OTHER ADDITIONAL SLEEVES, ANCHORS, VENT OPENINGS, ETC., NOT SHOWN ON STRUCTURAL PLANS THAT MIGHT BE REQUIRED.

10. PLACE CONCRETE IN A MANNER SO AS TO PREVENT SEGREGATION OF THE MIX. DELAY FLOATING AND TROWELLING OPERATIONS UNTIL CONCRETE HAS LOST SURFACE WATER SHEEN OR ALL FREE WATER. DO NOT SPRINKLE FREE CEMENT ON THE SLAB SURFACE. FINISHING OF SLAB SURFACES SHALL COMPLY WITH THE RECOMMENDATIONS OF AC1 302.1 AND 304.

11. UNLESS NOTED OTHERWISE ON PLAN, CONTROL JOINTS IN SLAB ON GRADE TO BE LOCATED APPROXIMATELY 225 SQ. FT. GRIDS. ACTUAL LOCATION TO BE DETERMINED BY OWNER OR CONTRACTOR.

12. PROVIDE 7 DAY CURING OF SLAB IMMEDIATELY AFTER FINISHING, USING ONE OF THE FOLLOWING METHODS

   A. CONTINUOUSLY WATERED BURLAP

   B. WATERPROOF MEMBRANES

13. PROTECT THE CONCRETE SURFACE BETWEEN FINISHING OPERATIONS ON HOT, DRY WINDY DAYS OR ANY OTHER TIME THAT PLASTIC SHRINKAGE CRACKS COULD DEVELOP BY USING WET BURLAP, PLASTIC MEMBRANE OR FOGGING. PROTECT CONCRETE SLAB AT ALL TIMES FROM RAIN, HAIL OR OTHER INJURIOUS EFFECTS.

14. UNLESS SPECIFIED CONCRETE MUST REACH THE FOLLOWING PERCENTAGES OF ITS 28-DAY COMPRESSIVE STRENGTH (F'c), BEFORE FORMS MAY BE REMOVED. 40% WALLS, COLUMNS & BEAM SIDES, 70% JOISTS, PANS & BEAM BOTTOMS (IF RESHORED), 85% SHORING FOR FLOOR SYSTEMS (IF NOT SHORED)

15. AN INDEPENDENT CERTIFIED TESTING LABORATORY SHALL VERIFY AND PROVIDE REPORTS CERTIFYING THE FOLLOWING:

   A. CONCRETE PLANT BATCH TICKETS FOR EACH TRUCK TO VERIFY THAT THE CONCRETE MATCHES THE APPROVED DESIGN MIX.

   B. CONCRETE SLUMP IS IN ACCORDANCE WITH APPROVED DESIGN MIX.

   C. CONCRETE PLACEMENT PREPARATIONS ARE IN ACCORDANCE WITH ACI SPECIFICATIONS.

   D. CONTROL / CONTRACTION JOINTS ARE INSTALLED WITHIN THE ACI TIME ALLOWANCE.

   E. PROPER CURING METHODS ARE BEING UTILIZED.

16. NO CONCRETE SHALL BE PLACED OUTSIDE OF THESE SPECIFICATIONS WITHOUT THE ENGINEER'S APPROVAL, ANY ITEMS NOT IN COMPLIANCE WITH THE OUTLINED SPECIFICATION SHALL BE REPORTED TO THE ARCHITECT AND STRUCTURAL ENGINEER WITHIN 24 HOURS.

17. REFER TO ARCHITECTURAL DRAWINGS FOR WATER PROOFING REQUIREMENTS.

18. UNLESS OTHERWISE NOTED ALL VERTICAL REINFORCEMENT ON COLUMNS SHALL BE SPLICED A MINIMUM OF 36 BAR DIAMETERS.

19. THE SHORES FOR THE FLOOR SLAB & BEAMS SHALL BE ADEQUATE TO CARRY THE TOTAL WEIGHT OF THE SLAB SYSTEM TO THE GROUND, ALL SHORING / RESHORING DESIGN SHALL BE THE RESPONSIBILITY OF THE CONTRACTOR.

20. THERE SHALL BE NO HORIZONTAL CONSTRUCTION JOINTS IN CONCRETE POURS. ALL CONSTRUCTION JOINTS SHALL BE MADE IN THE MIDDLE OF THE SPAN. WHEN A BEAM INTERSECTS A GIRDER AT MIDDLE 1/3 OF SPAN, THE JOINTS SHALL BE OFFSET DISTANCE EQUAL TO TWICE THE WIDTH OF THE BEAM. THE LOCATION OF CONSTRUCTION JOINTS SHALL BE APPROVED BY THE STRUCTURAL ENGINEER. ADDITIONAL REINFORCING AT CONSTRUCTION JOINTS SHALL BE SPECIFIED BY THE BEGINNER, SEE TYPICAL DETAIL. PROVIDE 75 FEET MAXIMUM SPACING OF CONSTRUCTION JOINTS IN GRADE BEAMS.

21. THE MAXIMUM WATER TO CEMENT RATIO: 0.50 (MAX) FOR NON-AIR ENTRAINED. AND 0.48 (MAX) FOR AIR ENTRAINED.

22. MAX. AGGREGATE SIZE 3/4 INCH.

23. PROVIDE BAR SUPPORT ACCESSORIES IN ACCORDANCE WITH THE LATEST ACI MANUAL, STANDARD PRACTICE FOR DETAILING REINFORCED CONCRETE STRUCTURES, SUPPORT BEAM REINFORCING ON BEAMS BOLSTERS SPACED NOT MORE THAN 4 FEET ON CENTER.

24. PROVIDE BAR SUPPORTS WITH PLASTIC COATED LEGS OR HOT DIP GALVANIZING AFTER FABRICATION FOR CONCRETE EXPOSED TO VIEW. PROVIDE STAINLESS STEEL BAR SUPPORTS FOR CONCRETE TO RECEIVE A SAND BLAST FINISH.

25. FOR PIPE INSTALLED HORIZONTALLY WITHIN THE SLAB, PROVIDE MAXIMUMS OUTSIDE DIAMETER OF 30% OF SLAB THICKNESS. PLACE CONDUIT OR PIPE BETWEEN THE TOP AND BOTTOM LAYER OF REINFORCEMENT WITH THE CENTER THIRD OF SLAB, DO NOT SPACE CONDUITS OF PIPES CLOSER THAN THREE DIAMETERS OF WIDTHS ON CENTER.

26. CONTRACTOR AND SUPPLIER TO COORDINATE ADDITIONAL ADMIXTURES AND SUBMIT MIX DESIGNS AS REQUIRED FOR MASS CONCRETE. AFTER COMPLETION OF THE EQUIPMENT FOUNDATION, THE CONCRETE SHALL BE INSPECTED AND ALL CRACKS FROM SHRINKAGE AND CONSTRUCTION STRESS SHALL BE REPAIRED.

REINFORCED CONCRETE NOTES CONTINUED

TENSION DEVELOPMENT LENGTH ('ld')

BAR SIZE	f'c= 3000 PSI		f'c= 4000 PSI		f'c= 5000 PSI		f'c= 6000 PSI		f'c= 7000 PSI		f'c= 8000 PSI		f'c= 10000 PSI	
	ld TOP	ld BOT	ld TOP	ld BOT	ld TOP	ld BOT	ld TOP	ld BOT	ld TOP	ld BOT	ld TOP	ld BOT	ld TOP	ld BOT
#3	1'-9"	1'-4"	1'-6"	1'-2"	1'-5"	1'-1"	1'-3"	1'-0"	1'-2"	1'-0"	1'-1"	1'-0"	1'-0"	1'-0"
#4	2'-4"	1'-10"	2'-1"	1'-7"	1'-10"	1'-5"	1'-8"	1'-3"	1'-7"	1'-2"	1'-5"	1'-1"	1'-4"	1'-0"
#5	3'-0"	2'-3"	2'-7"	2'-0"	2'-4"	1'9"	2'-1"	1'-7"	2'-0"	1'-6"	1'-10"	1'-5"	1'-8"	1'-3"
#6	3'-7"	2'-9"	3'-11"	2'-4"	2'-9"	2'-1"	2'-6"	1'-11"	2'-4"	1'-10"	2'-2"	1'-8"	1'-11"	1'-6"
#7	5'-2"	4'-0"	4'-5"	3'-6"	4'-0"	3'-1"	3'-8"	2'-10"	3'-5"	2'-8"	3'-2"	2'-5"	2'-10"	2'-2"
#8	5'-11"	4'-7"	5'-2"	3'-11"	4'-7"	3'-6"	4'-2"	3'-3"	4'-0"	3'-1"	3'-8"	2'-10"	3'-3"	2'-6"
#9	6'-8"	5'-2"	5'-9"	4'-5"	5'-2"	4'-0"	4'-9"	3'-8"	4'-5"	3'-5"	4'-1"	3'-2"	3'-8"	2'-10"
#10	7'-6"	5'-10"	6'-6"	5'-0"	5'-10"	4'-6"	5'-4"	4'-1"	5'-0"	3'-10"	4'-7"	3'-7"	4'-2"	3'-2"
#11	8'-4"	6'-5"	7'-3"	5'-7"	6'-6"	5'-0"	5'-11"	4'-7"	5'-6"	4'-3"	5'-1"	3'-11"	4'-5"	3'-6"

NOTES:
1. TABULATED VALUES ARE APPLICABLE ONLY IF CLEAR SPACING OF BARS BEING DEVELOPED OR SPLICED IS NOT LESS THAN 'db', CLEAR COVER IS NOT LESS THAN 'db' AND STIRRUPS OR TIES THROUGHOUT 'ld' IS NOT LESS THAN CODE MINIMUM, OR CLEAR SPACING OF BARS BEING DEVELOPED OR SPLICED IS NOT LESS THAN 2" 'db' AND CLEAR COVER IS NOT LESS THAN 'db'. FOR OTHER CASES , MULTIPLY TABULATED VALUES BY 1.5.
2. 'TOP' BARS ARE HORIZONTAL REBARS WITH MORE THAN 12 IN OF FRESH CONCRETE CAST BELOW THE BARS AT THE DEVELOPMENT LENGTH.
3. FOR LIGHT WEIGHT CONCRETE MULTIPLY THE TABULATED VALUES BY 1.3.
4. FOR EPOXY COATED BARS, MULTIPLY THE TABULATED VALUES BY 1.5 FOR 'BOT' BARS, OR BY 1.3. FOR TOP BARS.
5. FOR REINFORCEMENT OTHER THAN GRADE 60, MODIFY THE TABULATED VALUES BY THE RATIO OF THE REINFORCEMENT YIELD STRENGTH DIVIDED BY 60 KSI.

TENSION LAP SPLICES-CLASS B- TOP & BOT BARS

BAR SIZE	f'c= 3000 PSI		f'c= 4000 PSI		f'c= 5000 PSI		f'c= 6000 PSI		f'c= 7000 PSI		f'c= 8000 PSI		f'c= 10000 PSI	
	TOP	BOT	TOP	BOT	TOP	BOT	TOP	BOT	TOP	BOT	TOP	BOT	TOP	BOT
#3	2'-4"	1'-9"	2'-0"	1'-6"	1'-10"	1'-5"	1'-8"	1'-4"	1'-7"	1'-4"	1'-5"	1'-4"	1'-3"	1'-0"
#4	3'-1"	2'-4"	2'-8"	2'-1"	2'-5"	1'-10"	2'-2"	1'-8"	2'-1"	1'-7"	1'-11"	1'-5"	1'-8"	1'-7"
#5	3'-10"	3'-0"	3'-4"	2'-7"	3'-0"	2'-4"	2'-9"	2'-1"	2'-7"	2'-0"	2'-4"	1'-10"	2'-1"	1'-8"
#6	4'-8"	3'-7"	4'-0"	3'-1"	3'-7"	2'-9"	3'-3"	2'-8"	2'-11"	2'-4"	2'-10"	2'-2"	2'-6"	1'-11"
#7	6'-9"	5'-2"	5'-10"	4'-6"	5'-3"	4'-0"	4'-9"	3'-8"	4'-6"	3'-5"	4'-2"	3'-2"	3'-8"	2'-10"
#8	7'-9"	5'-11"	6'-8"	5'-2"	6'-0"	4'-7"	5'-5"	4'-2"	5'-1"	3'-11"	4'-9"	3'-8"	4'-3"	3'-3"
#9	8'-8"	6'-8"	7'-6"	5'-2"	6'-9"	5'-2"	6'-2"	4'-9"	5'-9"	4'-5"	5'-4"	4'-1"	4'-9"	3'-8"
#10	9'-10"	7'-6"	8'-6"	5'-9"	7'-7"	5'-10"	6'-11"	5'-4"	6'-6"	5'-0"	6'-0"	4'-7"	5'-4"	4'-2"
#11	10'-11"	8'-4"	9'-5"	7'-3"	8'-5"	6'-6"	7'-8"	5'-11"	7'-2"	5'-6"	6'-8"	5'-1"	5'-11"	4'-5"

NOTES:
1. TABULATED VALUES ARE APPLICABLE ONLY IF CLEAR SPACING OF BARS BEING DEVELOPED OR SPLICED IS NOT LESS THAN 'db', CLEAR COVER IS NOT LESS THAN 'db' AND STIRRUPS OR TIES THROUGHOUT 'ld' IS NOT LESS THAN CODE MINIMUM, OR CLEAR SPACING OF BARS BEING DEVELOPED OR SPLICED IS NOT LESS THAN 2" 'db' AND CLEAR COVER IS NOT LESS THAN 'db'. FOR OTHER CASES , MULTIPLY TABULATED VALUES BY 1.5.
2. 'TOP' BARS ARE HORIZONTAL REBARS WITH MORE THAN 12 IN OF FRESH CONCRETE CAST BELOW THE BARS AT THE DEVELOPMENT LENGTH.
3. FOR LIGHT WEIGHT CONCRETE MULTIPLY THE TABULATED VALUES BY 1.3.
4. FOR EPOXY COATED BARS, MULTIPLY THE TABULATED VALUES BY 1.5 FOR 'BOT' BARS, OR BY 1.3. FOR TOP BARS.
5. FOR REINFORCEMENT OTHER THAN GRADE 60, MODIFY THE TABULATED VALUES BY THE RATIO OF THE REINFORCEMENT YIELD STRENGTH DIVIDED BY 60 KSI.
6. FOR CLASS 'A' SPLICE USE SAME AS TENSION DEVELOPMENT LENGTH.

"Ldh" TENSION DEPELOPMENT (EMBEDMENT) LENGTH FOR STANDARD END HOOKS (GRADE 60 BARS - NORMAL WEIGHT CONCRETE - GENERAL USE)

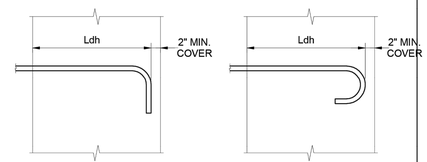

STANDARD 90 HOOK SIDE COVER > 21/2"

STANDARD 180 HOOK SIDE COVER > 21/2"

BAR SIZE	fc=3000 psi Ldh	fc=4000 psi Ldh	fc=5000 psi Ldh	fc=6000 psi Ldh
# 3	9"	7"	7"	6"
# 4	11"	10"	9"	8"
# 5	1'-2"	1'-0"	11"	10"
# 5	1'-5"	1'-3"	1'-1"	1'-0"
# 6	1'-7"	1'-5"	1'-3"	1'-2"
# 7	1'-10"	1'-7"	1'-5"	1'-4"
# 8	2'-1"	1'-10"	1'-7"	1'-6"
# 9	2'-4"	2'-0"	1'-10"	1'-8"
# 10	2'-8"	2'-2"	2'-0"	1'-10"

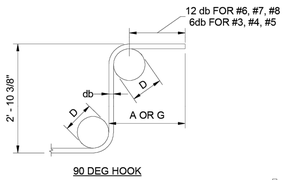

90 DEG HOOK

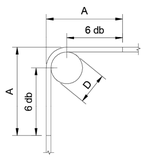

CORNER TIE HOOK

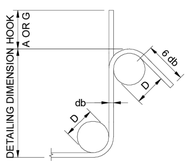

135 DEG HOOK

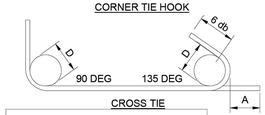

CROSS TIE

STIRRUP & TIE HOOK TYPES

BAR SIZE	D (IN.)	90 DEG HOOK A OR G (IN.)	135 DEG HOOK A OR G (IN.)
#3	1 1/2	4	4
#4	2	4 1/2	4 1/2
#5	2 1/2	6	5 1/2

APP. | DATE | REVISION | NO.

P.E. SEAL REQUIRED

PRELIMINARY

SUBJECT TO REVISION

This document is released for informational purposes under the authority of DAVID MOORE P.E. 139405 on 12/11/2025 It is not to be used for regulatory approval, permit, bidding, or construction purposes.

CONCEPT ENGINEERS
TX. FIRM REGISTRATION # F-04417
Structures for the whole community

IDS Engineering Group
13430 NW. Freeway
Suite 700
Houston, Tx. 77040
713.462.3178
TxEng Firm 2726
TxSurv Firm 10110700

CITY OF HOUSTON
HOUSTON PUBLIC WORKS

LIFT STATION RENEWAL AND REPLACEMENT FY 2023

GENERAL NOTES

WBS NUMBER	FOR CITY OF HOUSTON USE ONLY
R-000267-0179-4	
DRAWING SCALE	
AS NOTED	
CITY OF HOUSTON PM	
NAWARAJ PANTA, P.E.	
DWG. NO. SCT-S-02	SHEET NO. 115 OF 321

STRUCTURAL STEEL NOTES

1. ALL STRUCTURAL STEEL MEMBERS SHALL CONFORM TO THE FOLLOWING DESIGNATION

W SHAPES	ASTM A992		(50KSI)
SQUARE RECTANGULAR TUBES	ASTM A500	GR. C	(50 KSI)
ROUND TUBES (HSS)	ASTM A500	GR. C	(46 KSI)
STEEL PIPES	ASTM A53	GR. B	(35 KSI)
CHANNELS	ASTM A36		(36 KSI)
PLATES, ANGLES, MISC, STEEL	ASTM A36		(36 KSI)
ANCHOR RODS	ASTM F1554	GR.36	(36 KSI)
HARDENED STEEL WASHERS	ASTM F436		
HEAVY HEX NUTS	ASTM A563		
SEE NOTE 16			

2. ALL STRUCTURAL STEEL SHALL BE DETAILED FABRICATED AND ERECTED IN ACCORDANCE WITH A.I.S.C. STANDARDS 15th EDITION.

3. FOR ALL HIGH STRENGTH BOLTS, HARDENED WASHERS SHALL BE PROVIDED ON NUT SIDE OF BOLT FOR TORQUING AS REQUIRED.

4. ALL WELDING SHALL CONFORM TO STANDARD OF THE AMERICAN WELDING SOCIETY, AWS D1.1 LATEST EDITION STRUCTURAL WELDING CODE

5. E70 ELECTRODES FOR ALL FIELD AND SHOP WELDING SHALL CONFORM TO ANSI/AWS D1.1 LATEST EDITION UNLESS NOTED OTHERWISE ALL WELD SIZES SHALL BE PER AISC CODE. REFER TO NOTE 17 FOR ADDITIONAL INFORMATION.

6. SPLICING STRUCTURAL MEMBERS IS PROHIBITED WITHOUT PRIOR APPROVAL OF THE STRUCTURAL ENGINEER.

7. ANY TEMPORARY SHORING OR BRACING DURING THE CONSTRUCTION PHASE BEFORE COMPLETION OF CONNECTIONS IS THE RESPONSIBILITY OF THE CONTRACTOR.

8. IF NOT SHOWN ON THE DRAWINGS, SUPPORT OF METAL DECK AROUND COLUMN CLOSURE, SCREED PLATES AROUND THE OPENINGS AND EDGE OF SLAB SHALL BE PROVIDED BY THE CONTRACTOR.

9. ALL FIELD CONNECTIONS TO BOLTED WITH A325 BOLTS. BOLTS TO BE LEJEUNE TYPE OR EQUAL. PROVIDE MINIMUM OF TWO BOLTS PER CONNECTION, MINIMUM BOLT DIAMETER 3/4".

10. ALL EXPOSED STEEL SHALL BE HOT DIPPED GALVANIZED.

11. THE BEAM-TO-BEAM AND BEAM-TO-COLUMN SIMPLE SHEAR CONNECTIONS SHOULD DEVELOP THE END REACTION OF THE CONNECTED BEAM. THE END REACTION OF THE CONNECTED BEAM CAN BE OBTAINED FROM THE LOAD CARRYING CAPACITY OF THE BEAM ON THE BASIS OF EQUIVALENT UNIFORM LOADS GIVEN IN THE PART 3 OF AISC MANUAL LATEST EDITIONS (UNLESS LARGER REACTION IS SHOWN ON DRAWINGS). THE MINIMUM SHEARING CAPACITY OF 15 KIPS SHALL BE PROVIDED FOR ALL BEAMS. REFER TO NOTE 22 FOR COMPOSITE BEAM CONNECTION REQUIREMENTS.

12. THE DESIGN OF STRUCTURAL STEEL CONNECTIONS IS THE RESPONSIBILITY OF THE CONTRACTOR AND THE STEEL FABRICATOR. THE DESIGN OF STEEL CONNECTIONS SHALL BE PERFORMED BY A REGISTERED PROFESSIONAL ENGINEER, AND SHALL BE SUBMITTED TO THE ENGINEER OF RECORD FOR REVIEW.

13. STEEL BEAM BEARING ON MASONRY SHALL HAVE A MINIMUM OF 8" BEARING AND ANCHOR AS SHOWN ON THE DRAWINGS, MASONRY SHALL ALSO HAVE SOLID MASONRY OR FULLY GROUTED CELLS FROM STEEL BEARING TO GRADE BEAM BELOW.

14. UNLESS OTHERWISE NOTED, ALL MOMENT CONNECTIONS SHALL BE MADE WITH FULL PENETRATION WELD AND SHALL BE DESIGNED TO DEVELOP FULL CAPACITY OF THE MEMBER.

15. ANY MISCELLANEOUS STEEL NOT SHOWN ON THE PLANS, BUT REQUIRED DUE TO COORDINATION BETWEEN DIFFERENT DISCIPLINES SHALL BE INCLUDED BY THE CONTRACTOR IN THEIR BID.

16. CONNECTION MATERIALS
    a. BEAM, COLUMNS, STIFFENER PLATES AND DOUBLE PLATES TO MATCH GRADE STEEL OF STRUCTURAL ELEMENT
    b. ALL CONNECTION MATERIALS, EXCEPT AS OTHERWISE NOTED HEREIN OR IN THE DRAWINGS, INCLUDING BEARING PLATES, GUSSET PLATES, STIFFENER PLATES, ETC. ASTM A36

17. WELD MINIMUM SIZE & STRENGTH
    a. PROVIDE MINIMUM SIZE OF FILLET WELDS AS SPECIFIED IN TABLE J2,4 OF AISC MANUAL.
    b. PROVIDE MINIMUM EFFECTIVE THROAT THICKNESS OF PARTIAL PENETRATION GROOVE WELDS AS SPECIFIED ON TABLE J2.3 OF AISC MANUAL
    c. DEVELOP THE FULL TENSILE STRENGTH OF THE MEMBER ELEMENT JOIN ON ALL SHOP AND FIELD WELDS U.N.O.
    d. WHERE CONNECTIONS ARE NOTED ON DRAWINGS AS MOMENT CONNECTIONS PROVIDE WELDS TO DEVELOP FULL FLEXURAL CAPACITY OF THE LESSER MEMBER.

18. PROVIDE BOLTS, NUTS AND WASHERS THAT ARE HOT DIPPED GALVANIZED ACCORDING TO ASTM A153, CLASS C WHEN USED TO CONNECT STEEL ELEMENTS THAT ARE HOT DIP GALVANIZED AFTER FABRICATION.

19. FABRICATE AND ASSEMBLE STRUCTURAL MEMBERS/ASSEMBLIES IN SHOP TO GREATEST EXTEND POSSIBLE.

20. IF CAMBER OF STRUCTURAL MEMBERS IS INDICATED ON THE DRAWINGS WHERE POSSIBLE, CAMBER OF BEAMS TO BE APPLIED BY COLD BEND PROCESS, CAMBER INDICATED IN THE DRAWINGS ARE INTENDED TO BE FINAL CAMBER AT THE TIME OF ERECTION, AND WITHIN TOLERANCE O MINUS ZERO TO PLUS 1/8" FOR EACH TEM FEET OF MEMBER LENGTH. ALL BEAMS SHALL BE INSTALLED SO THAT NATURAL OF SPECIFIC CAMBER IS ORIENTED UPWARDS.

21. CONTRACTOR SHALL BE RESPONSIBLE FOR ALL ERRORS OF DETAILING ON THE SHOP DRAWINGS, ERRORS IN FABRICATION, AND THE CORRECT FITTING OF STRUCTURAL STEEL MEMBERS.

22. FIELD MODIFICATION TO STRUCTURAL STEEL IS PROHIBITED WITHOUT PRIOR APPROVAL BY THE E.O.R.

23. CLEAN STEEL OF RUST, LOSE MILL SCALE AND OTHER FOREIGN MATERIALS WHERE REQUIRED FOR FABRICATION, FITTING UP. OR WELDING.

24. DO NOT CUT STRUCTURAL STEEL MEMBERS FOR THE WORK OF OTHER TRADES WITHOUT PRIOR REVIEW AND APPROVAL OF THE E.O.R.

25. AFTER FABRICATION, HOT DIP GALVANIZE STRUCTURAL STEEL AND THEIR CONNECTIONS PERMANENTLY EXPOSED TO THE OUTSIDE, SUCH ITEMS INCLUDE BUT ARE NOT LIMITED TO:

    1. SHELF ANGLES
    2. PARAPET WALL SUPPORTING MEMBERS
    3, SCREEN WALL SUPPORTING MEMBERS
    4. EMBEDDED PLATES IN CONCRETE
    5. BUILDING CLADDING SUPPORT STEEL.

26. EXAMINE THE ARCHITECTURAL AND STRUCTURAL DRAWINGS FOR OTHER ITEMS THAT REQUIRE HOT DIPPED GALVANIZATION

27. PROVIDE NON-SHRINK NON-METALLIC GROUT FOR BASE PLATES WITH MINIMUM 28 DAYS COMPRESSIVE STRENGTH OF 6000 PSI COMPLETE GROUT WORK BEFORE ROOF CONCENTRATED POURING OF A SINGLE STORY BUILDING.

28. STRUCTURAL STEEL CONNECTIONS NOT COMPLETELY DETAILED ON THE DRAWINGS, INCLUDING MATERIAL GRADE & SIZES, WELD SIZES AND NUMBER OF BOLTS SHALL BE DESIGNED BY THE CONTRACTOR UNDER SUPERVISION OF REGISTERED PROFESSIONAL ENGINEER WHO IS REGISTERED ON THE STATE OF TEXAS AN EMPLOYED BY STEEL FABRICATOR, DESIGN CALCULATIONS TO BE SEALED BY FABRICATOR'S REGISTERED PROFESSIONAL ENGINEER, SHOP DRAWINGS SUBMITTED WITHOUT COMPLETE DESIGN CALCULATIONS WILL NOT BE REVIEWED. WHERE PREDESIGNED CONNECTIONS ARE TAKEN DIRECTLY FROM TABLES IN AISC MANUAL. CALCULATIONS NEED TO BE SUBMITTED PROVIDED JOB DESIGN CONDITIONS PRECISELY MATCH THOSE ASSUMED IN THE AISC MANUAL.

29. FURNISH SHOP DRAWINGS FOR E.O.R.'S REVIEW PRIOR TO FABRICATION. INCLUDE WELDING PROCEDURES, TESTING PROGRAMS FOR WELDING AND HIGH STRENGTH BOLTING, COATING MATERIAL, AND ERECTION SEQUENCE IN SHOP DRAWINGS.

30. MILL STEEL COLUMNS ENDS TO FIT FLUSH WITH BASE PLATE, AND END PLATES, FIELD ASSEMBLY OF THESE STEEL ELEMENTS TO THE COLUMNS IS PROHIBITED.

31. PROVIDE HEADED STUDS (SHEAR AND ANCHOR) MADE OF MATERIAL CONFORMING TO AWS D1.1 CLAUSE 9.2.6.

32. PROVIDE DEFORMED ANCHORS MADE OF MATERIAL CONFORMING TO ASTM A1064.

33. WELD STUDS ACCORDING TO MANUFACTURER'S RECOMMENDATIONS. MANUAL ARC (STICK) WELDING OF HEADED STUDS AND/OR DEFORMED ANCHORS IS NOT ALLOWED.

34. PRIOR TO DECK PLACEMENT, VERIFY THAT STEEL BEAMS BEARING ON MASONRY HAVE 6" MINIMUM BEARING AND ARE ANCHORED S SHOWN ON DRAWINGS.

EXISTING CONSTRUCTION NOTES

1. BEFORE PROCEEDING WITH ANY WORK WITHIN THE EXISTING FACILITY, THE CONTRACTOR SHALL FAMILIARIZE HIMSELF WITH EXISTING STRUCTURAL AND OTHER CONDITIONS. IT SHALL BE THE CONTRACTOR'S RESPONSIBILITY TO PROVIDE ALL NECESSARY BRACING, SHORING, AND OTHER SAFEGUARDS TO MAINTAIN ALL PARTS OF THE EXISTING WORK IN A SAFE CONDITION DURING THE PROCESS OF CONSTRUCTION, AND TO PROTECT FROM DAMAGE THOSE PORTIONS OF THE EXISTING WORK WHICH ARE TO REMAIN.

2. THE CONTRACTOR SHALL FIELD VERIFY THE DIMENSIONS, ELEVATIONS, ETC. NECESSARY FOR THE PROPER CONSTRUCTION AND ALIGNMENT OF THE NEW PORTIONS OF THE WORK TO THE EXISTING WORK. THE CONTRACTOR SHALL MAKE ALL MEASUREMENTS NECESSARY FOR FABRICATION AND ERECTION OF STRUCTURAL MEMBERS. ANY DISCREPANCY SHALL BE IMMEDIATELY BROUGHT TO THE ATTENTION OF THE ENGINEER.

3. WELDING TO AND WITHIN AN EXISTING FACILITY PRESENTS POTENTIAL HAZARDS, INCLUDING:
    A. FIRE HAZARD DUE TO THE EXISTING CONSTRUCTION AND BUILDING CONTENTS.
    B. STRUCTURAL LIQUEFACTION DUE TO WELDING ACROSS THE FULL SECTION OF STRUCTURAL MEMBERS.
    RECOMMENDATIONS TO PREVENT THESE HAZARDS INCLUDE:
    A. PROTECT EXISTING COMBUSTIBLES PRIOR TO WELDING. KEEP A SEPARATE WATCHMAN AND SEVERAL FIRE EXTINGUISHERS ON HAND
    B. WELD IN SMALL INCREMENTS. ALLOW WELDS TO HARDEN BEFORE CONTINUING TO THE NEXT INCREMENT.
    C. DO NOT LEAVE THE SITE UNTIL SATISFIED THAT NO FIRE HAZARD EXISTS.

4. THE CONTRACTOR SHALL BE RESPONSIBLE FOR THE DESIGN AND ERECTION OF ALL SHORING NECESSARY TO SAFEGUARD THE EXISTING STRUCTURE. THE CONTRACTOR SHALL SUBMIT A DETAILED PLAN FOR SHORING, BRACING, AND PROTECTION OF THE EXISTING CONSTRUCTION.

DEMOLITION NOTES

1. PERFORM DEMOLITION IN A CAREFUL AND CONTROLLED MANNER TO PREVENT DAMAGE TO EXISTING STRUCTURES , UTILITES AND IMPROVEMENTS TO REMAIN.

2. CONTRACTOR SHALL BE SOLEY RESPONSIBLE FOR ALL MEANS, METHODS, SEQUENCES . PROCEDURES, AND SAFETY PRECAUTIONS ASSOCIATED WITH DEMOLITION. ENGINEER'S DRAWINGS INDICATE LIMITS OF DEMOLITION ONLY AND DO NOT PRESCRIBE HOW DEMOLITION IS TO BE PERFORMED.

3. VERIFY FIELD CONDITIONS PRIOR TO STARTING WORK. PROVIDE ALL NECESSARY BRACING, SHORING, AND TEMPORARY SUPPORTS TO PREVENT MOVEMENT OR DAMAGE TO ADJACENT OR REMAINING STRUCTURES.

4. IMMEDIATELY CEASE OPERATIONS AND NOTIFY OWNER AND ENGINEER IF MOVEMENT, SETTLEMENT, OR UNSAFE CONDITIONS ARE OBSERVED DO NOT RESUME WORK UNTIL SAFETY HAS BEEN RESTORED.

5. REMOVE ONLY PORTIONS OF CONSTRUCTION INDICATED ON THE DRAWINGS. WHERE LIMITS ARE UNCLEAR, CONFIRM EXTENT OF REMOVAL WITH ENGINEER PRIOR TO PROCEEDING.

6. PERFORM ALL WORK IN ACCORDANCE WITH LOCAL, STATE AND FEDERAL REGULATIONS INCLUDING OSHA REQUIREMENTS. MAINTAIN SAFE ACCESS AND CONTROL DUST, DEBRIS, AND NOISE AT ALL TIMES.

7. REPAIR OR REPLACE, AT NO COST TO THE OWNER, ANY DAMAGE RESULTING FROM DEMOLITION OPERATIONS OR DEMOLITION PERFORMED BEYOND THE LIMITS INDICATED.

8. ENGINEER'S RESPONSIBILITY IS LIMITED TO DEFINING THE EXTENT OF DEMOLITION. CONTRACTOR SHALL BE FULLY RESPONSIBLE FOR MEANS, METHODS SAFETY AND PRTECTION OF EXISTING STRUCTURES AND FACILITIES.

STRUCTURAL ABBREVIATIONS

AB	ANCHOR BOLT	FLR	FLOOR	PERP	PERPENDICULAR
ALT	ALTERNATIVE	FOM	FACE OF MASONRY	PL	PLATE
ALUM	ALUMINUM	FS	FAR SIDE	PLUMB	PLUMBING
ARCH	ARCHITECTURAL	FT	FOOT	PNL	PANEL
B	BOTTOM	FTG	FOOTING	POLY	POLYETHYLENE
B/	BOTTOM OF	FUT	FUTURE	PREFAB	PREFABRICATED
BLDG	BUILDING	GA	GAGE	PSF	POUNS PER SQUARE FOOT
BM	BEAM	GALV	GALVANIZED	PSI	POUNS PER SQUARE INCH
B/BOT	BOTTOM	GYP	GYPSUM	QTY	QUANTITY
BRG	BEARING	HORIZ	HORIZONTAL	R	RADIUS
C	CHANNEL SHAPE	HP	HIGH POINT	RE	CALLED RIGHT END
C TO C	CENTER TO CENTER	HSS	HOLLOW STRUCTURAL SECTION	RE:	REFERENCE
CANT	CANTILIVER	HT	HEIGHT	REINF	REINFORCE (MENT) (D)
CJ	CONTROL JOINT	IN	INCH	REQ	REQUIRE
CONST JT	CONSTRUCTION JOINT	INFO	INFORMATION	REQD	REQUIRED
CL	CENTER LINE	INT	INTERIOR	REV	REVISION
CLR	CLEAR	INSUL	INSULATION	SCHED	SCHEDULE
CMU	CONCRETE MASONRY UNIT	JB	JOIST BOTTOM / SEAT ELEVATION	SF	SQUARE FOOT
COL	COLUMN	JST	JOIST	SHT	SHEET
CONC	CONCRETE	JT	JOINT	SI	SQUARE INCH
CONN	CONNECTION	K	KIPS	SIM	SIMILAR
CONST	CONSTRUCTION	KO	KNOCK OUT	SL	SLOPE
CONT	CONTINUOUS	KSF	KIPS PER SQUARE FOOT	SOG	SLAB ON GRADE
COORD	COORDINATE	KSI	KIPS PER SQUARE INCH	SPA	SPACES (D)
CTR	CENTER	L	ANGLE	SPEC	SPECIFICATION
CTRD	CENTERED	LB	POUND	STD	STANDARD
D	DEPTH	LE	LEFT END	STIFF	STIFFENER
DBA	DEFORMED ANCHOR BAR	LG	LONG	STL	STEEL
DBL	DOUBLE	LLH	LONG LEG HORIZONTAL	SW	SHORTWAY
DBL TEE	PRECAST DOUBLE TEE	LLV	LONG LEG VERTICAL	SYM	SYMETRICAL
DIA	DIAMETER	LSH	LONG SIDE HORIZONTAL	T	TOP
DIAG	DIAGONAL	LSV	LONG SIDE VERTICAL	T/	TOP OF
DIM	DIMENSION	LP	LOW POINT	T&B	TOP AND BOTTOM
DN	DOWN	LW	LONG WAY	THK	THICK
DTL	DETAIL	M	MIDDLE	TOF	TOP OF FOOTING
DWG	DRAWING	MANUF/MFR	MANUFACTER	TOJ	TOP OF JOIST
DWL	DOWEL	MATL	MATERIAL	TOS	TOP OF STEEL
EA	EACH	MAX	MAXIMUM	TRANSV	TRANSVERSE
EE	EACH END	MECH	MECHANICAL	TYP.	TYPICAL
EF	EACH FACE	MEP	MECHANICAL/ELECTRICAL/ PLUMBING	UON	UNLESS OTHERWISE NOTED
EJ	EXPANSION JOINT			VERT	VERTICAL
EL/ELEV	ELEVATION	MEZZ	MEZZANINE	WF	WIDE FLANGE SHAPE
EOR	ENGINEER OF RECORD	MIN	MINIMUM	W/	WITH
EOS	EDGE OF SLAB	MISC	MISCELLANEOUS	W/O	WITHOUT
EQ	EQUAL	MO	MASONRY OPENING	WP	WORK POINT
EQUIP	EQUIPMENT	MSL	MEAN SEA LEVEL	WS	WATERSTOP
ES	EACH SIDE	MTL	METAL	WT	T SHAPE
EW	EACH WAY	NO	NUMBER	WWF	WELDED WIRE FABRIC
EXIST	EXISTING	NS	NEAR SIDE	&	AND
EXP	EXPANSION	N.T.S.	NOT TO SCALE	@	AT
EXT	EXTERIOR	OC	ON CENTER	Ø	DIAMETER
FD	FLOOR DRAIN	OC EW	ON CENTER EACH WAY	#	NUMBER
FDN	FOUNDATION	OPNG	OPENING	±	PLUS/MINUS
FL	FULL LENGTH	OPP	OPPOSITE		
FF	FINISH FLR	PEMB	PREENGINEERRED METAL BUILDING		

NO.	DATE	REVISION	APP.

P.E. SEAL REQUIRED

PRELIMINARY

SUBJECT TO REVISION

This document is released for informational purposes under the authority of DAVID MOORE P.E. 139405 on 12/11/2025 It is not to be used for regulatory approval, permit, bidding, or construction purposes.

CONCEPT ENGINEERS

TX. FIRM REGISTRATION # F-04417

Structures for the whole community

IDS Engineering Group

13430 NW. Freeway
Suite 700
Houston, Tx. 77040
713.462.3178

TxEng Firm 2726
TxSurv Firm 10110700

CITY OF HOUSTON

HOUSTON PUBLIC WORKS

LIFT STATION RENEWAL AND REPLACEMENT FY 2023

GENERAL NOTES

WBS NUMBER	FOR CITY OF HOUSTON USE ONLY
R-000267-0179-4	
DRAWING SCALE	
AS NOTED	
CITY OF HOUSTON PM	
NAWARAJ PANTA, P.E.	
DWG. NO. SCT-S-03	SHEET NO. 116 OF 321

SPECIAL INSPECTIONS NOTES

THE FOLLOWING STATEMENT AND SCHEDULES OF INSPECTIONS OUTLINE THE SPECIAL INSPECTIONS AND TESTS NECESSARY FOR THIS PROJECT.
THE GENERAL CONTRACTOR SHALL HIRE AN "APPROVED AGENCY" PER THE INTERNATIONAL BUILDING CODE (IBC) SECTION 1703 TO PROVIDE SPECIAL INSPECTIONS FOR THIS PROJECT. THE QUALIFIED SPECIAL INSPECTOR SHALL REFERENCE THESE PLANS AND CHAPTER 17 OF THE IBC FOR ALL SPECIAL INSPECTION REQUIREMENTS. SPECIAL INSPECTION REPORTS SHOULD BE SUBMITTED WEEKLY.
THE APPROVED AGENCY SHALL SUBMIT COPIES OF ALL INSPECTION REPORTS TO THE ARCHITECT/ENGINEER AND THE AUTHORITY HAVING JURISDICTION (BUILDING OFFICIAL) FOR REVIEW. THE SPECIAL INSPECTION SHALL BRING DISCREPANCIES TO THE IMMEDIATE ATTENTION OF THE GENERAL CONTRACTOR FOR CORRECTION. IF THE DISCREPANCIES ARE NOT CORRECTED, THE DISCREPANCIES SHALL BE BROUGHT TO THE ATTENTION OF THE BUILDING OFFICIAL AND TO THE ARCHITECT PRIOR TO THE COMPLETION OF THAT PHASE OF THE WORK. IN ADDITION TO SPECIAL INSPECTION REPORTS AND TESTS, SUBMIT REPORTS AND CERTIFICATES NOTED IN IBC 1704.5 TO THE AUTHORITY HAVING JURISDICTION. FINAL REPORTS DOCUMENTING SPECIAL INSPECTIONS AND TESTS MUST BE SUBMITTED TO THE BUILDING OFFICIAL PER IBC 1704.2.4.

STATEMENT OF SPECIAL INSPECTIONS:

THIS SPECIAL INSPECTIONS STATEMENT HAS BEEN PREPARED WITH THE UNDERSTANDING THAT SEOR AND THE BUILDING OFFICIAL REPRESENTATIVE WILL:

- REVIEW AND ACCEPT THE QUALIFICATIONS OF THE SPECIAL INSPECTORS
- OBSERVE THE SPECIAL INSPECTION OPERATIONS TAKING PLACE AT THE PROJECT SITE TO ENSURE THAT THE SPECIAL INSPECTORS ARE COMPETENT AND CARRYING OUT THEIR ASSIGNED RESPONSIBILITIES AS SPECIFIED IN THIS STATEMENT.
- REVIEW ALL THE SPECIAL INSPECTION REPORTS THAT THE SPECIAL INSPECTOR HAS PROVIDED THEM WITH.
- CONDUCT INSPECTIONS AS SPECIFIED BY IBC SECTION 110.3

THE FOLLOWING SPECIAL INSPECTIONS APPLY TO THIS PROJECT:

- SPECIAL INSPECTIONS FOR STANDARD BUILDINGS PER IBC 1705.1 [REQUIRED]
- STORM SHELTER INSPECTIONS SHALL MATCH THE REQUIREMENTS OF THE HOST BUILDING PER SECTION 106 OF 2020 ICC-500. [REQUIRED]

SPECIAL INSPECTION OF SHOP-FABRICATED GRAVITY LOAD-BEARING MEMBERS AND ASSEMBLIES:

SPECIAL INSPECTION OF SHOP-FABRICATED GRAVITY LOAD BEARING MEMBERS & ASSEMBLIES SHALL BE PERFORMED BY THE SPECIAL INSPECTOR AS STATED IN SECTION 1704.2.5, WHICH INCLUDES THE FOLLOWING:

- BEFORE FABRICATION BEGINS, SPECIAL INSPECTORS REPRESENTING THE GENERAL CONTRACTOR NEED TO VISIT THE FABRICATOR'S SHOP TO VERIFY THAT THE FABRICATOR HAS DETAILED FABRICATION AND QUALITY CONTROL (QC) PROCEDURES IN PLACE. THESE PROCEDURES SHOULD COVER INSPECTION, WORKMANSHIP CONTROL, MATERIAL CONTROL, AND THE FABRICATOR'S ABILITY TO ADHERE TO THE APPROVED CONSTRUCTION DOCUMENTS AND REFERENCED STANDARDS.
- THE FABRICATOR MUST HAVE DETAILED PROCEDURES FOR MATERIAL CONTROL AVAILABLE FOR THE INSPECTOR TO REVIEW. THESE PROCEDURES SHOULD SHOW THAT THE FABRICATOR CAN MAINTAIN ACCURATE RECORDS AND PROCESSES SO THAT AT ANY POINT DURING FABRICATION, THE MATERIAL SPECIFICATION, GRADE, AND RELEVANT TEST REPORTS FOR PRIMARY LOAD-CARRYING MEMBERS CAN BE IDENTIFIED.

SPECIAL INSPECTION OF STRUCTURAL STEEL:

AS PER IBC SECTION 1705.2.1, A QUALIFIED SPECIAL INSPECTOR OF AN "APPROVED AGENCY" PROVIDING QUALITY ASSURANCE (QA) SPECIAL INSPECTIONS FOR THE PROJECT SHALL REVIEW AND CONFIRM THE FABRICATOR AND ERECTOR'S QUALITY CONTROL (QC) PROCEDURES FOR COMPLETENESS AND ADEQUACY RELATIVE TO AISC 360-16 CHAPTER N, AISC 303-16 CODE OF STANDARD AND PRACTICE, AWS D1.1-2015 STRUCTURAL WELDING CODE, AND 2018 IBC CODE REQUIREMENTS FOR THE FABRICATOR'S SCOPE OF WORK.

- QA AGENCY PROVIDING SPECIAL INSPECTIONS MUST EMPLOY PERSONNEL WHO MEET THE MINIMUM QUALIFICATION REQUIREMENTS FOR INSPECTION AND NONDESTRUCTIVE TESTING (NDT) AS PER AISC 360 SECTION N4.
- ENSURE THE FABRICATOR AND ERECTOR QUALITY CONTROL (QC) PROGRAM COMPLIES WITH AISC 360 SECTION N2.
- QC AND QA PERSONNEL SHALL INSPECT WELDS AND BOLTS PER THE SCHEDULE OF SPECIAL INSPECTIONS BELOW.
- ALL AWS D1.1 STRUCTURAL WELDING CODE PROVISIONS FOR STATICALLY LOADED STRUCTURES SHALL APPLY.
- NONDESTRUCTIVE TESTING (NDT) OF WELDS:
  - NON-DESTRUCTIVE TESTING (NDT) OF WELDED JOINTS PER AISC 360 N5.5
  - RISK CATEGORY FOR DETERMINATION OF THE EXTENT OF NDT PER AISC 360 N5.5B IS NOTED IN THE DESIGN CRITERIA AND LOADS SECTION OF THESE GENERAL REQUIREMENTS. NDT MUST BE DOCUMENTED, AND REPORTS SHOULD SPECIFY THE TESTED WELD BY PIECE MARK AND LOCATION.
- ADDITIONAL INSPECTION TASKS PER AISC 360 SECTION N5.8.

POST-INSTALLED ANCHORS TO CONCRETE AND MASONRY: SHALL COMPLY WITH IBC SECTION 1703. INSPECTIONS MUST COMPLY WITH THE REQUIREMENTS IN THE APPROVED ICC EVALUATION REPORT AND THE DESIGN REQUIREMENTS SPECIFIED ON THE DRAWINGS. REFER TO THE POST INSTALLED ANCHORS SECTION OF THESE NOTES FOR ANCHORS THAT ARE THE BASIS OF THE DESIGN. THE SPECIAL INSPECTOR MUST ENSURE THAT THE ANCHORS ARE IN ACCORDANCE WITH THE POST-INSTALLED ANCHORS SECTION OF THESE NOTES OR AS SPECIFICALLY INDICATED ON THE DRAWINGS. SUBSTITUTIONS MUST BE APPROVED BY THE SER AND REQUIRE SUPPORTING CALCULATIONS AND THE CURRENT 2018 IBC-RECOGNIZED ICC EVALUATION SERVICES (ES) REPORT. SPECIAL INSPECTORS MUST DOCUMENT COMPLIANCE WITH ALL ELEMENTS REQUIRED IN THE RELEVANT ICC EVALUATION SERVICES (ES) REPORT IN THEIR SPECIAL INSPECTION REPORT.

PREFABRICATED CONSTRUCTION: ALL PREFABRICATED CONSTRUCTION SHALL CONFORM TO IBC SECTION 1703.

PER THE ICC-500, SECTION 111.1 STRUCTURAL OBSERVATION :

DURING CONSTRUCTION OF THE STORM SHELTER, THE BUILDING OWNER SHALL EMPLOY A REGISTERED DESIGN PROFESSIONAL TO CONDUCT VISUAL OBSERVATIONS OF THE CONSTRUCTION OF THE STRUCTURAL SYSTEM FOR GENERAL CONFORMANCE TO THE APPROVED CONSTRUCTION DOCUMENTS AT SIGNIFICANT CONSTRUCTION STAGES AND AT COMPLETION OF THE CONSTRUTION OF THE STRUCTURAL SYSTEM.

STRUCTURAL OBSERVATION SHALL NOT OBVIATE THE NEED FOR OTHER INSPECTIONS OR TESTING REQUIRED BY THIS STANDARD OR APPLICABLE CODE.

DEFICIENCIES SHALL BE REPORTED IN WRITING TO THE ATHORITY HAVING JURISDICTION AND OWNER OR THE OWNER'S AUTHORIZED AGENT. AT THE CONCLUSION OF THE WORK, THE REGISTERED DESIGN PROFESSIONAL WHO MADE THE STRUCTURAL OBSERVATIONS SHALL SUBMIT TO THE AUTHORITY HAVING JURISDICTION A WRITTEN STATEMENT THAT THE SITE VISITS HAVE BEEN MADE AND SHALL IDENTIFY ANY REPORTED DEFICIENCIES THAT, TO THE BEST OF THE STRUCTURAL OBSERVER'S KNOWLEDGE, HAVE NOT BEEN RESOLVED.

SECTION 110
SPECIAL INSPECTIONS

110.1 SPECIAL INSPECTIONS

SPECIAL INSPECTION SHALL BE PROVIDED IN ACCORDANCE SITH THIS SECTION, IN ADDITION TO THOSE REQUIRED BY THE *AUTHORITY HAVING JURISDICTION* IN ACCORDANCE WITH THE *APPLICABLE CODE*. ONE STATEMENT OF *SPECIAL INSPECTIONS* SHALL BE PERMITTED TO APPLY TO BOTH *HOST BUILDING* AND *STORM SHELTER* CONSTRUCTION.

EXCEPTION: PREFABRICATED OR PANELIZED *STORM SHELTER* COMPONENTS THAT HAVE BEEN INSPECTED AND *LABELED* BY AN *APPROVED AGENCY* MEETING THE REQUIREMENTS OF THE *APLICABLE CODE*.

110.1.2 SPECIAL CASES

SPECIAL INSPECTIONS SHALL BE PROVIDED FOR PROPOSED WORK COMPRISED OF THE FOLLOWING:

1. CONSTRUCTION MATERIALS AND SYSTEMS THAT ARE ALTERNATIVES TO TRADITIONAL MATERIALS AND SYSTEMS PRESCRIBED BY THE *APPLICABLE CODE*.
2. UNUSUAL DESIGN AND CONSTRUCTION APPLICATIONS.
3. ANCHORS POS-INSTALLED IN HARDENED CONCRETE AND MASONRY, WHERE USED FOR ANCHORAGE OF *STORM SHELTER* COMPONENTS FORMING A PART OF THE *STORM SHELTER* ENCLOSURE OR FOR ANCHORAGE OF THE *STORM SHELTER* STRUCTURE TO FOUNDATIONS SHALL BE IN ACCORDANCE WITH SECTION 110.1.2.1.

110.1.2.1 SPECIAL INSPECTIONS TO VERIFY ANCHOR INSTALLATION

A *SPECIAL INSPECTION* SHALL BE PROVIDED TO VERIFY THE POS-INSTALLED ANCHOR INSTALLATION AND CAPACITY IN ACCORDANCE WITH SECTION 106.2.1. FOR POST-INSTALLED ANCHORAGE TO FOUNDATIONS, *SPECIAL INSPECTION* SHALL BE PROVIDED TO VERIFY FOUNDATION ADEQUACY IN ACCORDANCE WITH SECTIONS 106.2.1 AND 307.

TABLE 1705.3
REQUIRED SPECIAL INSPECTIONS AND TESTS OF CONCRETE CONSTRUCTION

TYPE	CONTINUOUS SPECIAL INSPECTION	PERIODIC SPECIAL INSPECTION	REFERENCED STANDARD[a]	IBC REFERENCE
1. INSPECT REINFORCEMENT, INCLUDING RESTRESSING TENDONS, AND VERIFY PLACEMENT.	-	X	ACI 318: CH. 20, 25.2, 25.3, 26.6.1-26.6.3	-
2. REINFORCING BAR WELDING:				-
a. VERIFY WELDABILITY OF REINFORCING BARS OTHER THAN ASTM A706;			AWS D1.4	
b. INSPECT SINGLE-PASS FILLET WELDS, MAXIMUM 5/16"; AND	-	X	ACI 318: 26.6.4	
c. INSPECT ALL OTHER WELDS.	X	X		
3. INSPECT ANCHORS CAST IN CONCRETE.	-	X	ACI 318: 17.8.2	-
4. INSPECT ANCHORS POST-INSTALLED IN HARDENED CONCRETE MEMBERS.[B]				-
a. ADHESIVE ANCHORS INSTALLED IN HORIZONTALLY OR UPWARDLY INCLINED ORIENTATIONS TO RESIST SUSTAINED TENSION LOADS.	X	X	ACI 318: 17.8.2.4	
b. MECHANICAL ANCHORS AND ADHESIVE ANCHORS NOT DEFINED IN 4.A.			ACI 318: 17.8.2	
5. VERIFY USE OF REQUIRED DESIGN MIX.	-	X	ACI 318: CH. 19, 26.4.3, 26.4.4	-
6. PRIOR TO CONCRETE PLACEMENT, FABRICATE SPECIMENS FOR STRENGTH TESTS, PERFORM SLUMP AND AIR CONTENT TESTS, AND DETERMINE THE TEMPERATURE OF THE CONCRETE.	X		ASTM C31 ASTM C172 ACI 318: 26.5, 26.12	-
7. INSPECT CONCRETE AND SHOTCRETE PLACEMENT FOR PROPER APPLICATION TECHNIQUES.	X		ACI 318: 26.5	-
8. VERIFY MAINTENANCE OF SPECIFIED CURING TEMPERATURE AND TECHNIQUES.	-	X	ACI 318: 26.10	-
9. INSPECT PRESTRESSED CONCRETE FOR: A. APPLICATION OF PRESTRESSING FORCES; AND B. GROUTING OF BONDED PRESTRESSING TENDONS.	X X		ACI 318: CH. 20, 25.2, 25.3, 26.6.1-26.6.3	-
10. INSPECT ERECTION OF PRECAST CONCRETE MEMBERS.	-	X	ACI 318: 26.9	-
11. FOR PRECAST CONCRETE DIAPHRAGM CONNECTIONS OR REINFORCEMENT AT JOINTS CLASSIFIED AS MODERATE OR HIGH DEFORMABILITY ELEMENTS (MDE OR HDE) IN STRUCTURES ASSIGNED TO SEISMIC DESIGN CATEGORY C, D, E OR F, INSPECT SUCH CONNECTIONS AND REINFORCEMENT IN THE FIELD FOR:			ACI 318: 26.13.1.3	-
a. INSTALLATION OF THE EMBEDDED PARTS	X			
b. COMPLETION OF THE CONTINUITY OF REINFORCEMENT ACROSS JOINTS.	X		ACI 550.5	
c. COMPLETION OF CONNECTIONS IN THE FIELD.	X			
12. INSPECT INSTALLATION TOLERANCES OF PRECAST CONCRETE DIAPHRAGM CONNECTIONS FOR COMPLIANCE WITH ACI 550.5.	-	X	ACI 318: 26.13.1.3	-
13. VERIFY IN-SITU CONCRETE STRENGTH, PRIOR TO STRESSING OF TENDONS IN POST-TENSIONED CONCRETE AND PRIOR TO REMOVAL OF SHORES AND FORMS FROM BEAMS AND STRUCTURAL SLABS.	-	X	ACI 318: 26.11.2	-
14. INSPECT FORMWORK FOR SHAPE, LOCATION AND DIMENSIONS OF THE CONCRETE MEMBER BEING FORMED.	-	X	ACI 318: 26.11.1.2(b)	-

SCHEDULES OF SPECIAL INSPECTIONS:

TABLE 1705.6
REQUIRED SPECIAL INSPECTIONS AND TESTS OF SOILS

TYPE	CONTINUOUS SPECIAL INSPECTION	PERIODIC SPECIAL IN- SPECTION
1. VERIFY MATERIALS BELOW SHALLOW FOUNDATIONS ARE ADEQUATE TO ACHIEVE THE DESIGN BEARING CAPACITY.	-	X
2. VERIFY EXCAVATIONS ARE EXTENDED TO PROPER DEPTH AND HAVE REACHED PROPER MATERIAL.	-	X
3. PERFORM CLASSIFICATION AND TESTING OF COMPACTED FILL MATERIALS.	-	X
4. VERIFY USE OF PROPER MATERIALS, DENSITIES AND LIFT THICKNESSES DURING PLACEMENT AND COMPACTION OF COMPACTED FILL.	X	-
5. PRIOR TO PLACEMENT OF COMPACTED FILL, INSPECT SUBGRADE AND VERIFY THAT SITE HAS BEEN PREPARED PROPERLY.	-	X

TABLE 1705.2.3
REQUIRED SPECIAL INSPECTIONS OF OPEN-WEB STEEL JOISTS AND JOIST GIRDERS

TYPE	CONTINUOUS SPECIAL INSPECTION	PERIODIC SPECIAL INSPECTION	REFERENCED STANDARD[a]
1. INSTALLATION OF OPEN-WEB STEEL JOISTS AND JOIST GIRDERS.			
a. END CONNECTIONS – WELDING OR BOLTED.	-	X	SJI SPECIFICATIONS LISTED IN SECTION 2207.1.
b. BRIDGING – HORIZONTAL OR DIAGONAL.	-	X	-
1. STANDARD BRIDGING.	X	X	SJI SPECIFICATIONS LISTED IN SECTION 2207.1.
2. BRIDGING THAT DIFFERS FROM THE SJI SPECIFICATIONS LISTED IN SECTION 2207.1.	-	X	-

MINIMUM REQUIREMENTS FOR INSPECTIONS OF STRUCTURAL STEEL CONSTRUCTION

INSPECTION TASKS	QC	QA	REFERENCED STANDARD
INSPECTION TASKS PRIOR TO WELDING			
1. Welder qualification records and continuity records	P	O	AISC 360 TABLE N5.4-1
2. Welding procedure specifications (WPSs) available	P	O	AISC 360 TABLE N5.4-1
3. Manufacturing certifications for welding consumables available	P	O	AISC 360 TABLE N5.4-1
4. Material identification (type/grade)	P	O	AISC 360 TABLE N5.4-1
5. Welder Identification system	P	O	AISC 360 TABLE N5.4-1
8. Configuration and finish of access holes	P	O	AISC 360 TABLE N5.4-1
9. Fit-up of fillet welds • Dimensions (alignment gaps at root) • Cleanliness (condition of steel surfaces) • Tacking (tack weld quality and location)	P	O	AISC 360 TABLE N5.4-1
10. Check welding equipment	P	O	AISC 360 TABLE N5.4-1
INSPECTION TASKS DURING WELDING			
1. Use of qualified welders	P	O	AISC 360 TABLE N5.4-2
2. Control and handling of welding consumables • Packaging • Exposure Control	P	O	AISC 360 TABLE N5.4-2
3. No welding over cracked track welds	P	O	AISC 360 TABLE N5.4-2
4. Environmental conditions • Wind speed within limits • Precipitation and temperature	P	O	AISC 360 TABLE N5.4-2
5. WPS followed • Settings on welding equipment • Travel speed • Selected welding materials • Shielding gas type/flowrate • Preheat applied • Interpass temperature maintained (min/max) • Proper position (F,V,H,OH)	P	O	AISC 360 TABLE N5.4-2
6. Welding techniques • Interpass and final cleaning • Each pass within profile limitations • Each pass meets quality requirements	P	O	AISC 360 TABLE N5.4-2
INSPECTION TASKS AFTER WELDING			
1. Welds cleaned	P	O	AISC 360 TABLE N5.4-3
2. Size, length, and locations of welds	P	O	AISC 360 TABLE N5.4-3
3. Welds meet visual acceptance criteria • Crack prohibition • Weld/base-metal fusion • Crater cross section • Weld profiles • Weld size • Undercut • Porosity	P	O	AISC 360 TABLE N5.4-3
4. Arc strikes	P	O	AISC 360 TABLE N5.4-3
5. k-area	P	O	AISC 360 TABLE N5.4-3
6. Weld access holes in roled heavy shapes and built-up heavy shapes	P	O	AISC 360 TABLE N5.4-3
7. Backing removed and weld tabs removed (if required)	P	O	AISC 360 TABLE N5.4-3
8. Repair activities	P	O	AISC 360 TABLE N5.4-3
9. Document acceptance or rejection of welded joint or member	P	O	AISC 360 TABLE N5.4-3
10. No prohibited welds have been added without the approval of the EOR	P	O	AISC 360 TABLE N5.4-3
INSPECTION TASKS PRIOR TO BOLTING			
1.Manufacturer's certifications available for fastener materials	P	O	AISC 360 TABLE N5.6-1
2.Fasteners marked in accordance with ASTM requirements	P	O	AISC 360 TABLE N5.6-1
3.Correct fasteners selected for the joint detail (grade, type, bolt length if threads are to be excluded from shear plane)	P	O	AISC 360 TABLE N5.6-1
4.Correct bolting procedures selected for joint detail	P	O	AISC 360 TABLE N5.6-1
5.Connecting elements, including the appropriate faying surface condition and hole preparation, if specified, meet applicable requirements.	P	O	AISC 360 TABLE N5.6-1
6.Pre-installation verification testing by installation personnel observed and documented for fastener assemblies and methods used	P	O	AISC 360 TABLE N5.6-1
7.Proper storage provided for bolts, nuts, washers and other fasteners components	P	O	AISC 360 TABLE N5.6-1
INSPECTION TASKS DURING BOLTING			
1. Fastener assemblies, of suitable condition, placed in all holes and washers are positioned as required	P	O	AISC 360 TABLE N5.6-2
2. Joint brought to the snug-tight condition prior to the pre-tensioning operation	P	O	AISC 360 TABLE N5.6-2
3. Fastener component not turned by the wrench prevented from rotating	P	O	AISC 360 TABLE N5.6-2
4. Fasteners are pre-tensioned in accordance with the RCSC Specification, progressing systematically from the most rigid point toward the free edges.	P	O	AISC 360 TABLE N5.6-2
INSPECTION TASKS AFTER BOLTING	P	O	AISC 360 TABLE N5.6-2
1. Document acceptance or rejection of bolted connections	P	O	AISC 360 TABLE N5.6-2

O - Observe these items on a random basis. Operations need not be delayed pending these inspections
P - Perform these tasks for each welded joint or member, each bolted connection, or each steel element

NO.	DATE	REVISION	APP.

P.E. SEAL REQUIRED
PRELIMINARY
SUBJECT TO REVISION
This document is released for informational purposes under the authority of DAVID MOORE P.E. 139405 on 12/11/2025 It is not to be used for regulatory approval, permit, bidding, or construction purposes.

CONCEPT ENGINEERS
TX. FIRM REGISTRATION # F-04417
Structures for the whole community

IDS Engineering Group
13430 NW. Freeway
Suite 700
Houston, Tx. 77040
713.462.3178
TxEng Firm 2726
TxSurv Firm 10110700

CITY OF HOUSTON
HOUSTON PUBLIC WORKS

LIFT STATION RENEWAL AND REPLACEMENT FY 2023

GENERAL NOTES

WBS NUMBER	FOR CITY OF HOUSTON USE ONLY
R-000267-0179-4	
DRAWING SCALE	
AS NOTED	
CITY OF HOUSTON PM	
NAWARAJ PANTA, P.E.	
DWG. NO. SCT-S-04	SHEET NO. ### OF 321

NO.	DATE	REVISION	APP.

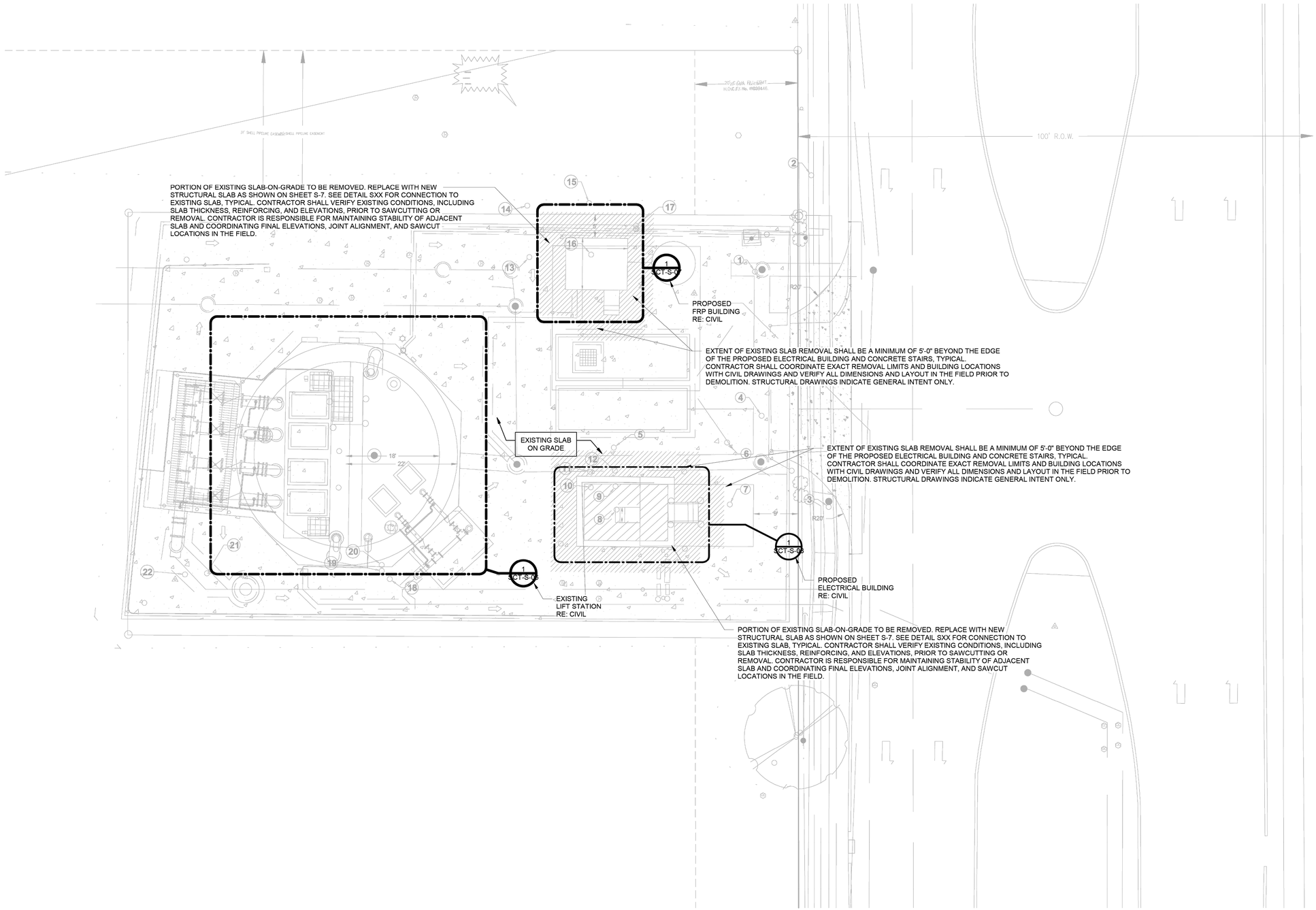

P.E. SEAL REQUIRED

PRELIMINARY

SUBJECT TO REVISION

This document is released for informational purposes under the authority of DAVID MOORE P.E. 139405 on 12/11/2025 It is not to be used for regulatory approval, permit, bidding, or construction purposes.

CONCEPT ENGINEERS

TX. FIRM REGISTRATION # F-04417

Structures for the whole community

IDS Engineering Group

13430 NW. Freeway
Suite 700
Houston, Tx. 77040
713.462.3178

TxEng Firm 2726
TxSurv Firm 10110700

CITY OF HOUSTON

HOUSTON PUBLIC WORKS

LIFT STATION RENEWAL AND REPLACEMENT FY 2023

SITE PLAN

WBS NUMBER	FOR CITY OF HOUSTON USE ONLY
R-000267-0179-4	
DRAWING SCALE	
AS NOTED	
CITY OF HOUSTON PM	
NAWARAJ PANTA, P.E.	

DWG. NO.	SHEET NO.
SCT-S-05	118 OF 321

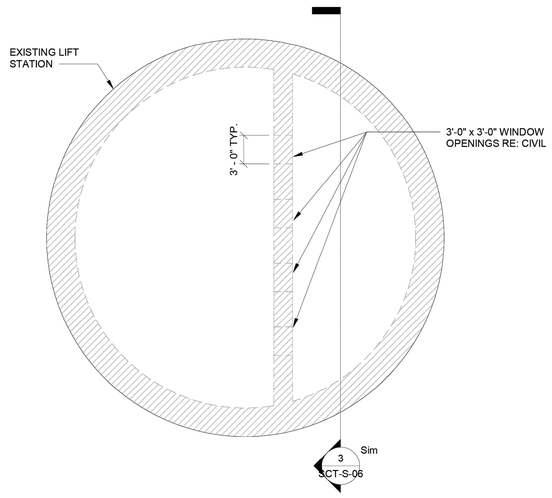

1 EXISTING LIFT STATION PLAN

1/8" = 1'-0"

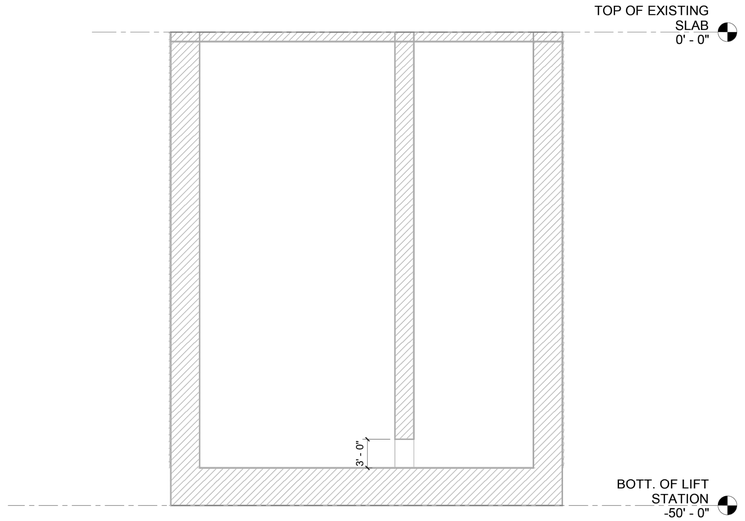

2 EXISTING LIFT STATION SECTION

1/8" = 1'-0"

NOTES:

1. Contractor shall verify existing wall thickness, reinforcement, and elevations prior to cutting.

2. Sawcut full depth around perimeter of opening; do not use impact demolition methods.

3. Remove concrete within sawcut limits carefully to avoid damaging adjacent reinforcement.

4. Exposed reinforcing bars at opening edges shall be cleaned, epoxy coated, and bent back or cut flush as directed by the engineer.

5. Provide new stainless steel or epoxy-coated #5 dowels @ 12" o.c. each side, 6" embed into existing wall and 6" into new reinforced collar, unless otherwise noted.

6. Provide new reinforced concrete collar around opening, 12" min. thickness all around (typ.), tied into existing wall with dowels.

7. New concrete shall be 4000 psi, sulfate-resistant, w/ corrosion inhibitor, cured and coated with epoxy protective coating suitable for wastewater immersion.

8. Smooth and round all exposed concrete edges (1" min. chamfer or radius).

9. After all openings are completed, apply two coats of epoxy coating (Tnemec or equal) to all exposed concrete surfaces.

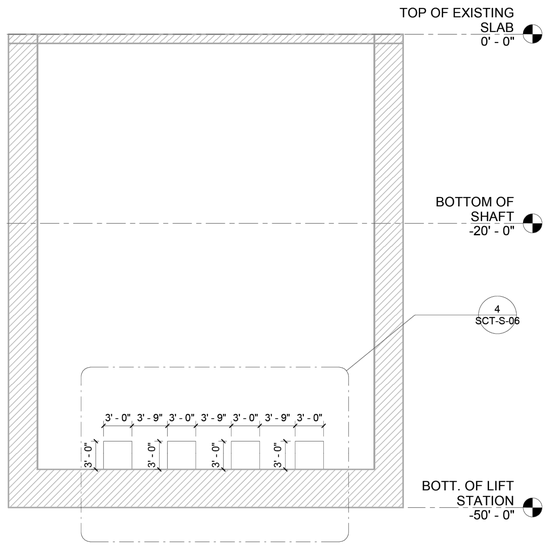

3 EXISTING LIFT STATION WALL ELEVATION

1/8" = 1'-0"

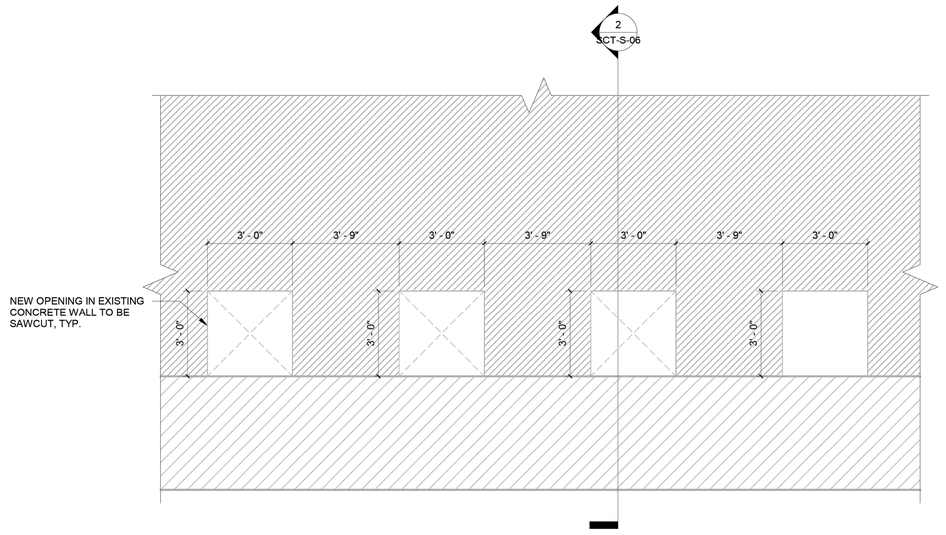

4 EXISTING LIFT STATION WALL ELEVATION (BLOWN UP DETAIL)

3/8" = 1'-0"

NO.	DATE	REVISION	APP.

P.E. SEAL REQUIRED

PRELIMINARY

SUBJECT TO REVISION

This document is released for informational purposes under the authority of DAVID MOORE P.E. 139405 on 12/11/2025 It is not to be used for regulatory approval, permit, bidding, or construction purposes.

CONCEPT ENGINEERS
TX. FIRM REGISTRATION # F-04417
Structures for the whole community

IDS Engineering Group
13430 NW. Freeway
Suite 700
Houston, Tx. 77040
713.462.3178
TxEng Firm 2726
TxSurv Firm 10110700

CITY OF HOUSTON

HOUSTON PUBLIC WORKS

LIFT STATION RENEWAL AND REPLACEMENT FY 2023

EXISTING LIFT STATION

WBS NUMBER	FOR CITY OF HOUSTON USE ONLY
R-000267-0179-4	
DRAWING SCALE	
AS NOTED	
CITY OF HOUSTON PM	
NAWARAJ PANTA, P.E.	
SHEET NO. 119 OF 321	

DWG. NO. SCT-S-06

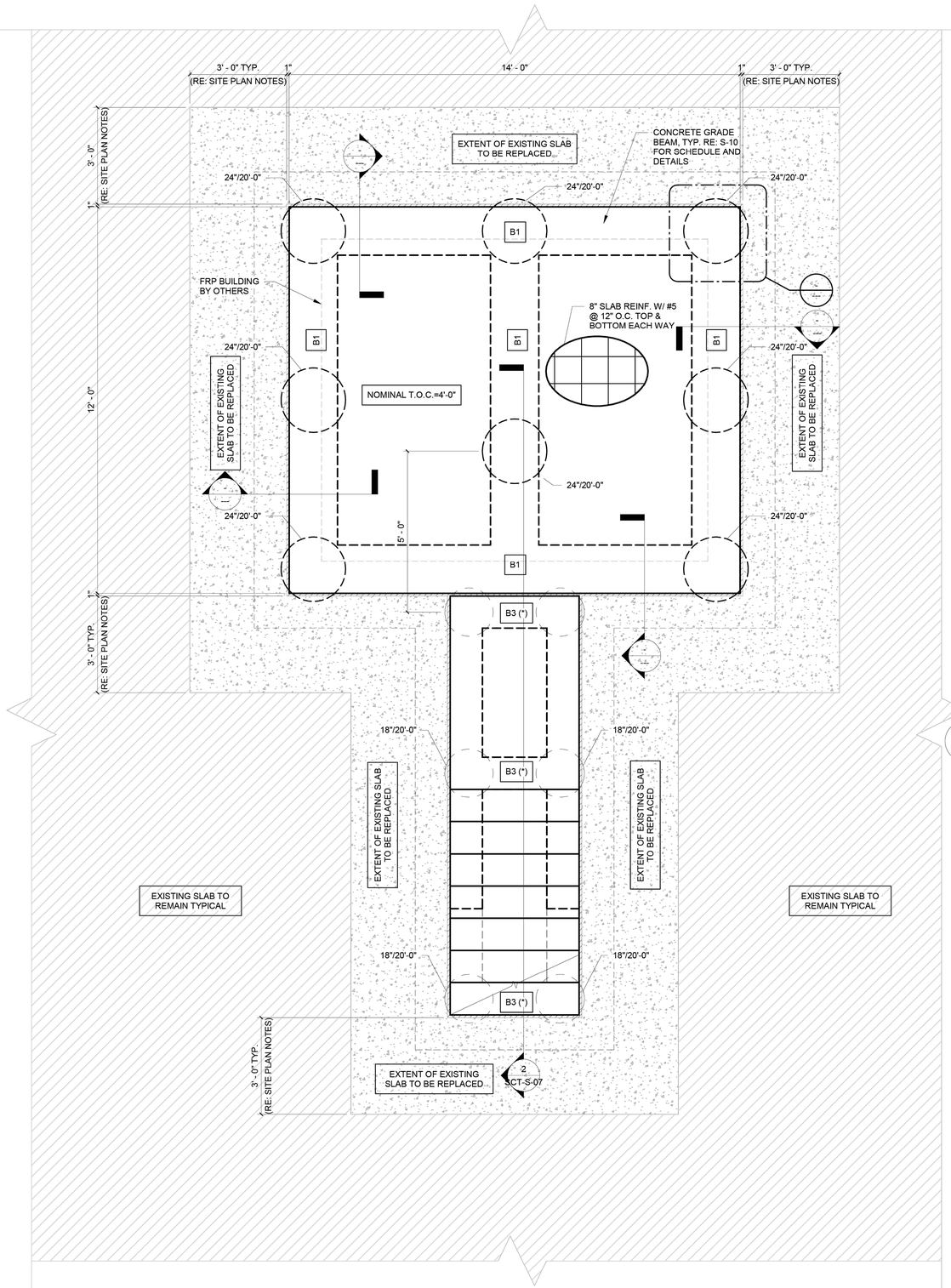

1 FRP BUILDING FOUNDATION PLAN

1/2" = 1'-0"

PLAN NOTES:

1. CENTER ALL DRILLED SHAFTS UNDER CENTERLINE OF STEEL COLUMN. IF NO STEEL COLUMN IS SHOWN, CENTER DRILLED SHAFTS UNDER CENTER OF GRADE BEAM.

2. ALL STEEL TO BE HOT DIPPED GALVANIZED.

3. FINISH FLOOR ELEVATION = 0'-0", FINISH FLOOR ELEVATION OF NEW STRUCTURAL SLAB TO MATCH ELEVATION OF EXISTING SLAB. RE: CIVIL FOR ACTUAL ELEVATION.

4. "P1" AS SHOWN ON PLAN INDICATES CONCRETE PEDESTAL TYPE P1. THE TOP ELEVATION OF ALL PEDESTALS IS AT -1'-0" TYP U.N.O. REFER TO S-XX FOR DIMENSIONS & REINF.

5. "B1" AS SHOWN ON PLAN INDICATES CONCRETE BEAM TYPE B1. THE TOP ELEVATION OF ALL BEAMS IS AT -1'-0" TYP U.N.O. REFER TO S-XX FOR BEAM SCHEDULE AND DETAILS.

6. " 18"/20'-0" " AS SHOWN ON PLAN INDICATES A DRILLED STRAIGHT SHAFT THAT IS 18" IN DIAMETER AND 20'-0" LONG MEASURED FROM BOTTOM OF FINISHED FLOOR. THE TOP ELEVATION OF ALL STRAIGHT SHAFTS ARE AT -3'-0", TYP, U.N.O. RE: S-XX FOR STRAIGHT SHAFT SCHEDULE AND DETAILS.

7. REFER TO CIVIL/MEP FOR DIMENSIONS AND LOCATIONS OF ALL SLOPED AND DEPRESSION.

8. (*) INDICATES BEAMS WITH VARYING DEPTHS. RE: SECTION

9. PORTION OF EXISTING SLAB-ON-GRADE TO BE REMOVED. REPLACE WITH NEW STRUCTURAL SLAB AS SHOWN ON SHEET S-7. SEE DETAIL SXX FOR CONNECTION TO EXISTING SLAB, TYPICAL. CONTRACTOR SHALL VERIFY EXISTING CONDITIONS, INCLUDING SLAB THICKNESS, REINFORCING, AND ELEVATIONS, PRIOR TO SAWCUTTING OR REMOVAL. CONTRACTOR IS RESPONSIBLE FOR MAINTAINING STABILITY OF ADJACENT SLAB AND COORDINATING FINAL ELEVATIONS, JOINT ALIGNMENT, AND SAWCUT LOCATIONS IN THE FIELD.

10. EXTENT OF EXISTING SLAB REMOVAL SHALL BE A MINIMUM OF 3'-0" BEYOND THE EDGE OF THE PROPOSED ELECTRICAL BUILDING AND CONCRETE STAIRS, TYPICAL. CONTRACTOR SHALL COORDINATE EXACT REMOVAL LIMITS AND BUILDING LOCATIONS WITH CIVIL DRAWINGS AND VERIFY ALL DIMENSIONS AND LAYOUT IN THE FIELD PRIOR TO DEMOLITION. STRUCTURAL DRAWINGS INDICATE GENERAL INTENT ONLY.

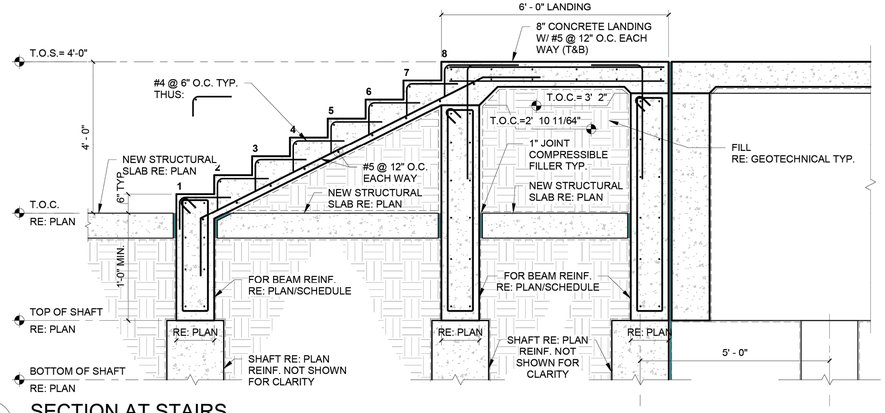

2 SECTION AT STAIRS

1/2" = 1'-0"

NO.	DATE	REVISION	APP.

P.E. SEAL REQUIRED

PRELIMINARY

SUBJECT TO REVISION

This document is released for informational purposes under the authority of DAVID MOORE P.E. 139405 on 12/11/2025 It is not to be used for regulatory approval, permit, bidding, or construction purposes.

CONCEPT ENGINEERS

TX. FIRM REGISTRATION # F-04417

Structures for the whole community

IDS Engineering Group

13430 NW. Freeway
Suite 700
Houston, Tx. 77040
713.462.3178

TxEng Firm 2726
TxSurv Firm 10110700

CITY OF HOUSTON

HOUSTON PUBLIC WORKS

LIFT STATION RENEWAL AND REPLACEMENT FY 2023

FRP BUILDING FOUNDATION PLAN

WBS NUMBER	FOR CITY OF HOUSTON USE ONLY
R-000267-0179-4	
DRAWING SCALE	
AS NOTED	
CITY OF HOUSTON PM	
NAWARAJ PANTA, P.E.	
DWG. NO. SCT-S-07	SHEET NO. 120 OF 321

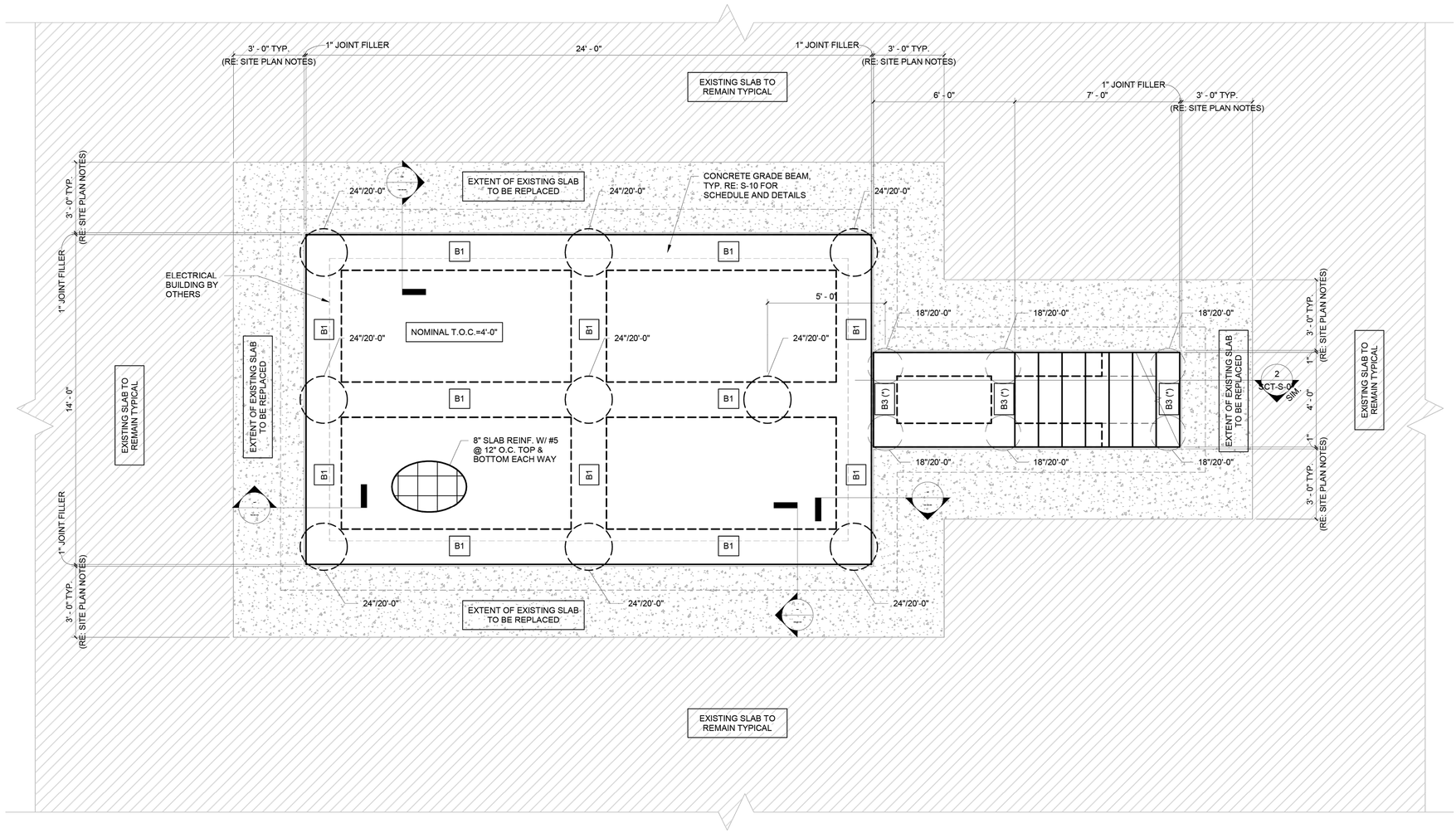

1 ELECTRICAL BUILDING FOUNDATION PLAN

3/8" = 1'-0"

PLAN NOTES:

1. CENTER ALL DRILLED SHAFTS UNDER CENTERLINE OF STEEL COLUMN. IF NO STEEL COLUMN IS SHOWN, CENTER DRILLED SHAFTS UNDER CENTER OF GRADE BEAM.

2. ALL STEEL TO BE HOT DIPPED GALVANIZED.

3. FINISH FLOOR ELEVATION = 0'-0". FINISH FLOOR ELEVATION OF NEW STRUCTURAL SLAB TO MATCH ELEVATION OF EXISTING SLAB. RE: CIVIL FOR ACTUAL ELEVATION.

4. "P1" AS SHOWN ON PLAN INDICATES CONCRETE PEDESTAL TYPE P1. THE TOP ELEVATION OF ALL PEDESTALS IS AT -1'-0" TYP U.N.O. REFER TO S-XX FOR DIMENSIONS & REINF.

5. "B1" AS SHOWN ON PLAN INDICATES CONCRETE BEAM TYPE B1. THE TOP ELEVATION OF ALL BEAMS IS AT -1'-0" TYP U.N.O. REFER TO S-XX FOR BEAM SCHEDULE AND DETAILS.

6. " 18"/20'-0" " AS SHOWN ON PLAN INDICATES A DRILLED STRAIGHT SHAFT THAT IS 18" IN DIAMETER AND 20'-0" LONG MEASURED FROM BOTTOM OF FINISHED FLOOR. THE TOP ELEVATION OF ALL STRAIGHT SHAFTS ARE AT -3'-0", TYP, U.N.O. RE: S-XX FOR STRAIGHT SHAFT SCHEDULE AND DETAILS.

7. REFER TO CIVIL/MEP FOR DIMENSIONS AND LOCATIONS OF ALL SLOPED AND DEPRESSION.

8. (*) INDICATES BEAMS WITH VARYING DEPTHS. RE: SECTION

9. PORTION OF EXISTING SLAB-ON-GRADE TO BE REMOVED. REPLACE WITH NEW STRUCTURAL SLAB AS SHOWN ON SHEET S-7. SEE DETAIL SXX FOR CONNECTION TO EXISTING SLAB, TYPICAL. CONTRACTOR SHALL VERIFY EXISTING CONDITIONS, INCLUDING SLAB THICKNESS, REINFORCING, AND ELEVATIONS, PRIOR TO SAWCUTTING OR REMOVAL. CONTRACTOR IS RESPONSIBLE FOR MAINTAINING STABILITY OF ADJACENT SLAB AND COORDINATING FINAL ELEVATIONS, JOINT ALIGNMENT, AND SAWCUT LOCATIONS IN THE FIELD.

10. EXTENT OF EXISTING SLAB REMOVAL SHALL BE A MINIMUM OF 3'-0" BEYOND THE EDGE OF THE PROPOSED ELECTRICAL BUILDING AND CONCRETE STAIRS, TYPICAL. CONTRACTOR SHALL COORDINATE EXACT REMOVAL LIMITS AND BUILDING LOCATIONS WITH CIVIL DRAWINGS AND VERIFY ALL DIMENSIONS AND LAYOUT IN THE FIELD PRIOR TO DEMOLITION. STRUCTURAL DRAWINGS INDICATE GENERAL INTENT ONLY.

NO.	DATE	REVISION	APP.

P.E. SEAL REQUIRED

PRELIMINARY

SUBJECT TO REVISION

This document is released for informational purposes under the authority of DAVID MOORE P.E. 139405 on 12/11/2025 It is not to be used for regulatory approval, permit, bidding, or construction purposes.

CONCEPT ENGINEERS
TX. FIRM REGISTRATION # F-04417
Structures for the whole community

IDS Engineering Group
13430 NW. Freeway
Suite 700
Houston, Tx. 77040
713.462.3178
TxEng Firm 2726
TxSurv Firm 10110700

CITY OF HOUSTON

HOUSTON PUBLIC WORKS

LIFT STATION RENEWAL AND REPLACEMENT FY 2023

ELECTRICAL BUILDING FOUNDATION PLAN

WBS NUMBER	FOR CITY OF HOUSTON USE ONLY
R-000267-0179-4	
DRAWING SCALE	
AS NOTED	
CITY OF HOUSTON PM	
NAWARAJ PANTA, P.E.	

DWG. NO.	SHEET NO.
SCT-S-08	121 OF 321

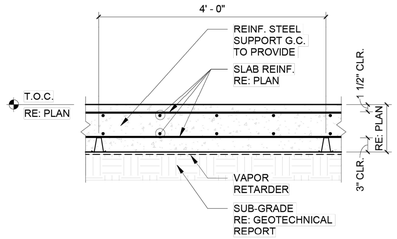

1 TYPICAL SLAB SECTION DETAIL

3/4" = 1'-0"

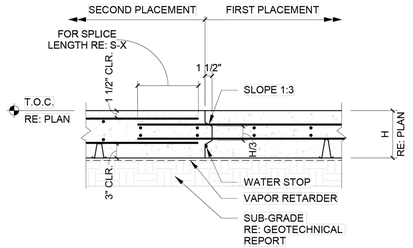

NOTE:
MAXIMUM 80 FEET BETWEEN CONSTRUCTION JOINTS AND 72 HOURS MINIMUM BETWEEN ADJACENT PLACEMENTS.

2 TYPICAL CONSTRUCTION JOINT

3/4" = 1'-0"

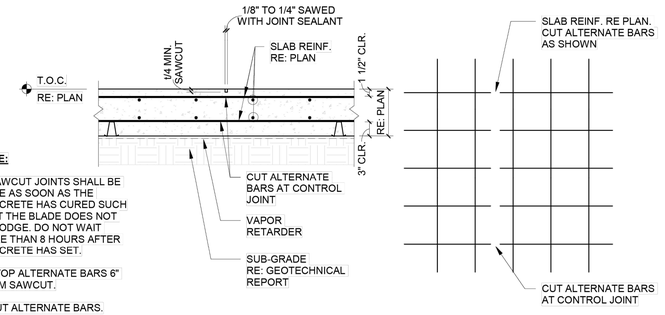

NOTE:

1. SAWCUT JOINTS SHALL BE MADE AS SOON AS THE CONCRETE HAS CURED SUCH THAT THE BLADE DOES NOT DISLODGE. DO NOT WAIT MORE THAN 8 HOURS AFTER CONCRETE HAS SET.
2. STOP ALTERNATE BARS 6" FROM SAWCUT.
3. CUT ALTERNATE BARS.

3 TYPICAL SLAB CONTROL JOINT

3/4" = 1'-0"

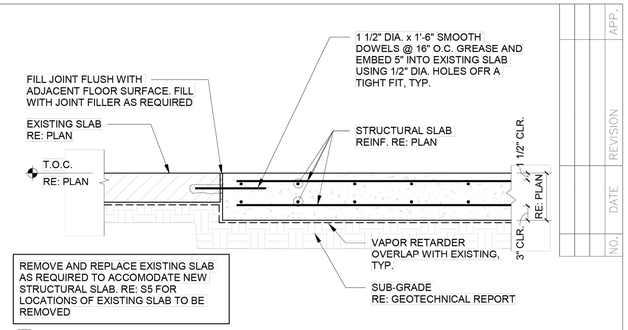

REMOVE AND REPLACE EXISTING SLAB AS REQUIRED TO ACCOMODATE NEW STRUCTURAL SLAB. RE: S5 FOR LOCATIONS OF EXISTING SLAB TO BE REMOVED

4 TYP NEW TO EXISTING SLAB CONSTRUCTION JOINT

NO SCALE

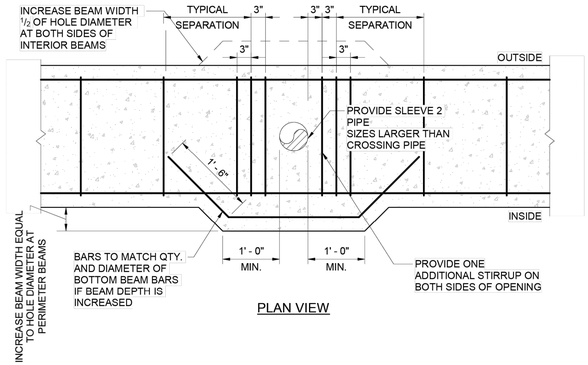

PLAN VIEW

5 VERT. PIPE OPENING LARGER THAN 3" THRU GD. BM.

3/4" = 1'-0"

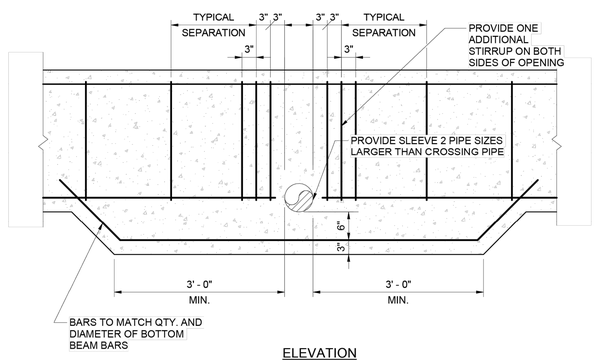

ELEVATION

6 PIPE OPENING THRU GD. BM. IN CONFLICT W/BOT. REINF.

3/4" = 1'-0"

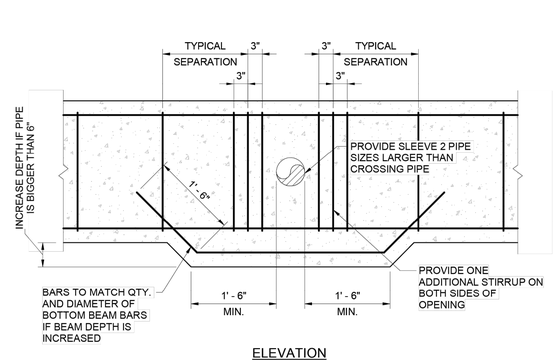

ELEVATION

7 TYP. DETAIL PIPE OPENING THRU GRADE BEAM

3/4" = 1'-0"

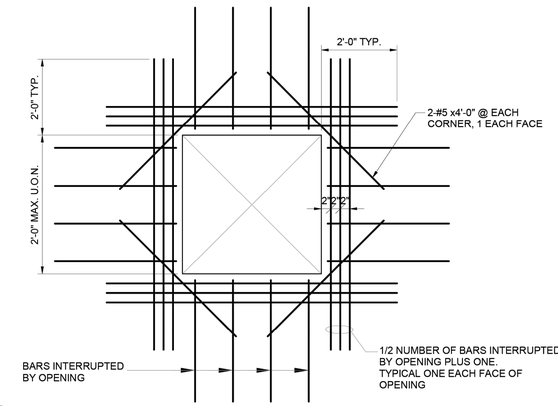

8 TYPICAL ADDITIONAL BAR PLACING DETAIL FOR SLAB

3/4" = 1'-0"

NOTE:

1. GENERAL CONTRACTOR TO COORDINATE REQUIRED SIZE OF BLOCK OUT FOR COLUMNS WITH ARCHITECT AND/OR OWNER.
2. APPLY BLOCK OUT THROUGH FULL DEPTH OF SLAB CONSTRUCTION.
3. BLOCK OUT SHALL BE 3" CLEAR OF EDGE OF BASE PLATE AND STRUCTURAL PLINTH BELOW.
4. COORDINATE CONTROL JOINTS WITH ARCHITECTURAL DRAWINGS.

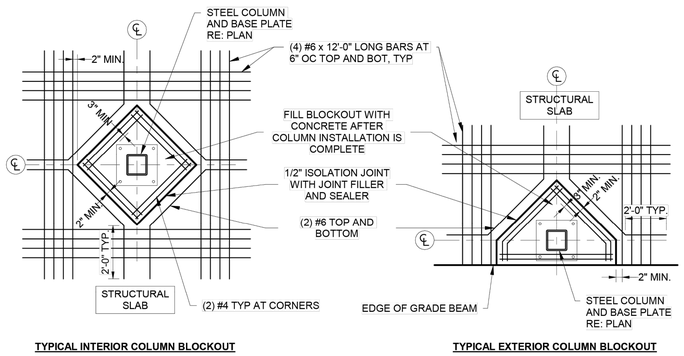

TYPICAL INTERIOR COLUMN BLOCKOUT | **TYPICAL EXTERIOR COLUMN BLOCKOUT**

9 TYPICAL BLOCKOUT DETAIL

1/2" = 1'-0"

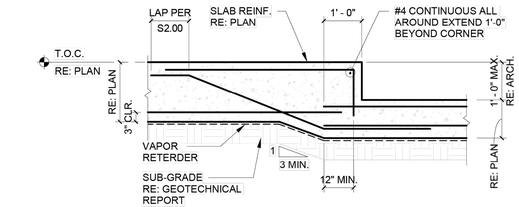

NOTE:
TRANSVERSE REINFORCEMENT NOT SHOWN FOR CLARITY

11 TYP. SLAB DEPRESSION DETAIL

1/2" = 1'-0"

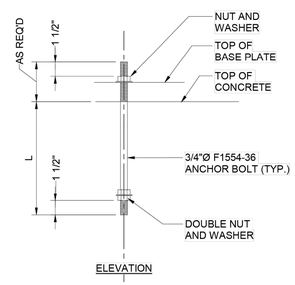

ELEVATION

10 TYPICAL ANCHOR BOLT DETAIL

1 1/2" = 1'-0"

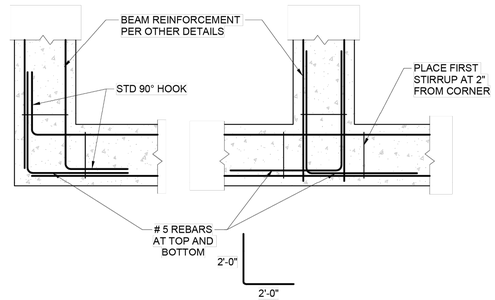

12 TYP. BAR PLACING DETAILS

3/4" = 1'-0"

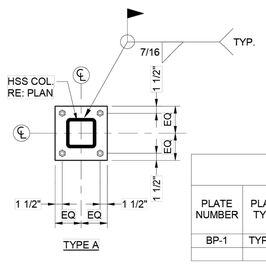

TYPE A

7-BASE PLATE AND ANCHOR BOLT SCHEDULE							
PLATE NUMBER	PLATE TYPE	PLATE THICKNESS	PLATE Fy	ANCHOR BOLT TYPE	ANCHOR BOLT DIAMETER	PLATE DIM.	ANCHOR BOLT LENGTH (L)
BP-1	TYPE A	3/4"	36 ksi	TYPE 1	3/4"	12"X12"	18"

13 BASE PLATE DETAILS AND SCHEDULE

3/4" = 1'-0"

NO.	DATE	REVISION	APP.

P.E. SEAL REQUIRED

PRELIMINARY

SUBJECT TO REVISION

This document is released for informational purposes under the authority of DAVID MOORE P.E. 139405 on 12/11/2025 It is not to be used for regulatory approval, permit, bidding, or construction purposes.

CONCEPT ENGINEERS
TX. FIRM REGISTRATION # F-04417
Structures for the whole community

IDS Engineering Group
13430 NW. Freeway
Suite 700
Houston, Tx. 77040
713.462.3178
TxEng Firm 2726
TxSurv Firm 10110700

CITY OF HOUSTON

HOUSTON PUBLIC WORKS

LIFT STATION RENEWAL AND REPLACEMENT FY 2023

TYPICAL FOUNDATION DETAILS

WBS NUMBER	R-000267-0179-4
DRAWING SCALE	AS NOTED
CITY OF HOUSTON PM	NAWARAJ PANTA, P.E.
DWG. NO.	SCT-S-09
SHEET NO.	122 OF 321

FOR CITY OF HOUSTON USE ONLY

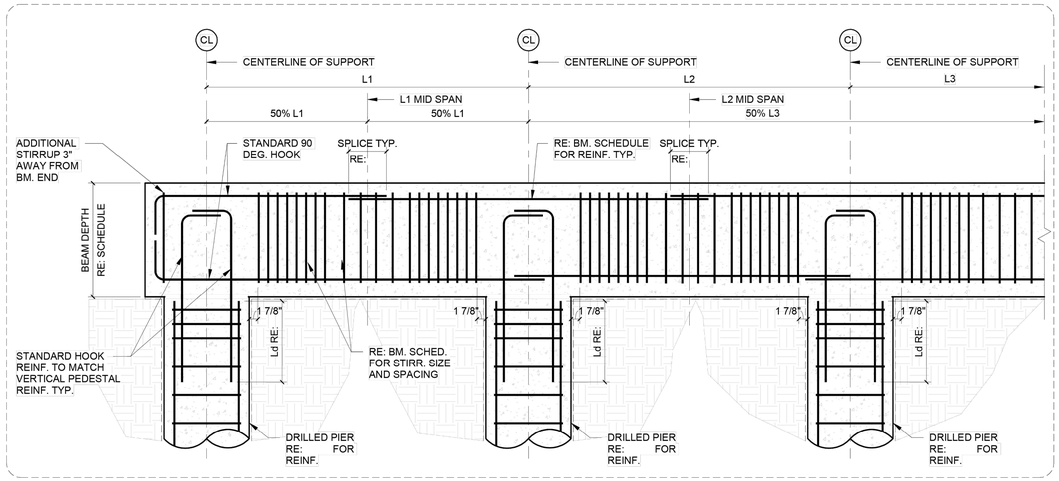

SECTION AT CONTINUOUS BEAM

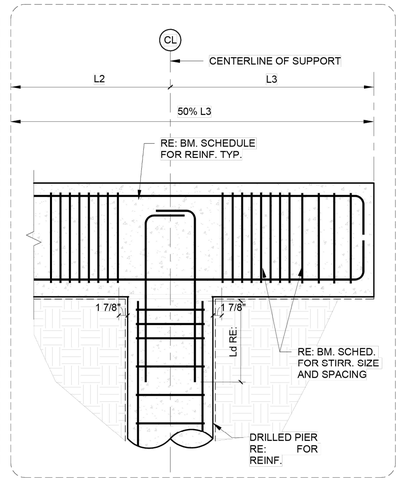

SECTION AT CANTILEVERED BEAM

BEAM SCHEDULE						
TAG	WIDTH	DEPTH	TOP REINFORCEMENT	MIDDLE REINFORCEMENT	BOTTOM REINFORCEMENT	STIRRUPS
B1	2'-0"	2'-0"	(5) #7	-	(5) #7	#4 @ 10" O.C. (3 @ 3" O.C., REST @ 10" O.C.) PROVIDE #4 @ 6" O.C. IN CANTILEVERED END. HOOK LONGITUDINAL BARS IN CANTILEVERED END.
B2	2'-0"	2'-0"	(3) #7	-	(3) #7	#4 @ 10" O.C. (3 @ 3" O.C., REST @ 10" O.C.)
B3	2'-0"	RE: PLAN	(5) #7	(6) #6	(5) #7	#4 @ 10" O.C. (3 @ 3" O.C., REST @ 10" O.C.)

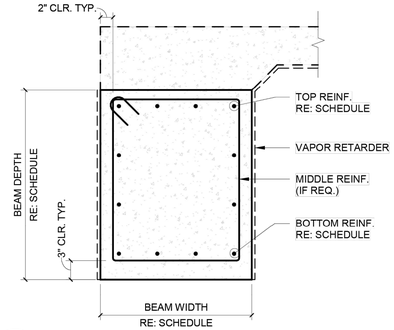

1 TYPICAL REINFORCEMENT SPLICE DETAIL AT BEAM (NEW DETAIL)

3/4" = 1'-0"

2 BEAM SCHEDULE1

1" = 1'-0"

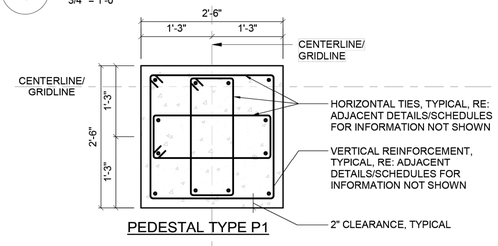

PEDESTAL TYPE P1

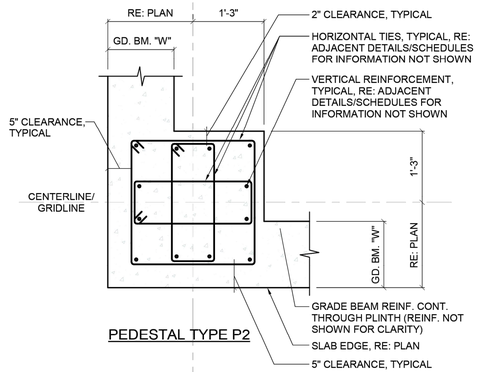

PEDESTAL TYPE P2

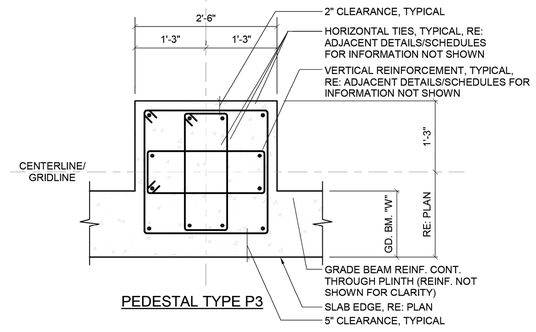

PEDESTAL TYPE P3

3 TYP. PEDESTAL DETAILS/SCHEDULES1

3/4" = 1'-0"

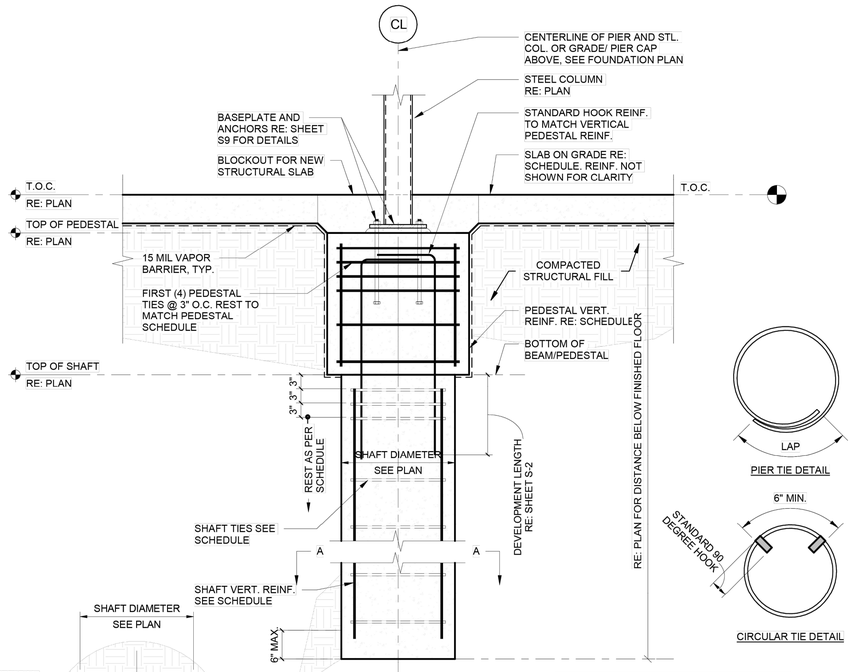

DRILLED SHAFT SCHEDULE		
SHAFT DIAMETER	VERTICAL REINF.	CLOSED TIES
18"	(6) #6	#4 @ 10" O.C.
24"	(8) #7	#4 @ 10" O.C.
30"	(9) #8	#4 @ 10" O.C.
36"	(10) #9	#4 @ 10" O.C.

4 TYPICAL STRAIGHT SHAFT DETAILS1

3/4" = 1'-0"

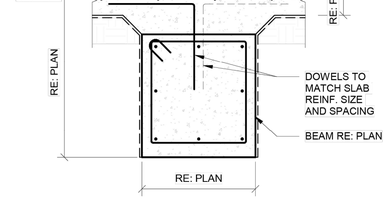

5 SECTION AT INTERIOR BEAM1

3/4" = 1'-0"

PEDESTAL SCHEDULE			
TAG	VERT. REINF.	CLOSED TIES	NOTES
TYPE P1	(12) #6	#4 @ 10" O.C.	TOP 4- #4 CLOSED TIES @ 3" O.C., REST @ 10" O.C.
TYPE P2	(12) #6	#4 @ 10" O.C.	TOP 4- #4 CLOSED TIES @ 3" O.C., REST @ 10" O.C.
TYPE P3	(12) #6	#4 @ 10" O.C.	TOP 4- #4 CLOSED TIES @ 3" O.C., REST @ 10" O.C.

6 PEDESTAL SCHEDULE1

1" = 1'-0"

P.E. SEAL REQUIRED

PRELIMINARY

SUBJECT TO REVISION

This document is released for informational purposes under the authority of DAVID MOORE P.E. 139405 on 12/11/2025 It is not to be used for regulatory approval, permit, bidding, or construction purposes.

CONCEPT ENGINEERS
TX. FIRM REGISTRATION # F-04417
Structures for the whole community

IDS Engineering Group
13430 NW. Freeway
Suite 700
Houston, Tx. 77040
713.462.3178
TxEng Firm 2726
TxSurv Firm 10110700

CITY OF HOUSTON

HOUSTON PUBLIC WORKS

LIFT STATION RENEWAL AND REPLACEMENT FY 2023

FOUNDATION DETAILS & SCHEDULES

WBS NUMBER	FOR CITY OF HOUSTON USE ONLY
R-000267-0179-4	
DRAWING SCALE	
AS NOTED	
CITY OF HOUSTON PM	
NAWARAJ PANTA, P.E.	
DWG. NO. SCT-S-10	SHEET NO. 123 OF 321

NO.	DATE	REVISION	APP.

PLOTTED: 12/11/2025 8:33 PM

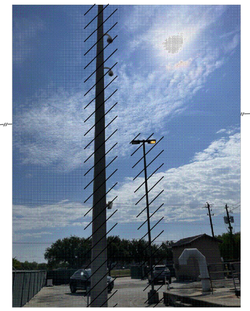

EXISTING WIMAX POLE & LIGHT POLE

PHOTOGRAPH G (7) NTS -



EXISTING SERVICE RACK

PHOTOGRAPH A (1) NTS -

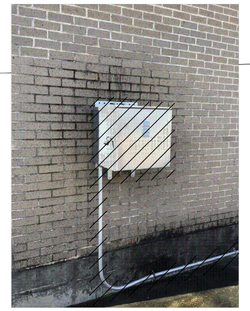

EXISTING WIMAX BOX

PHOTOGRAPH B (2) NTS -

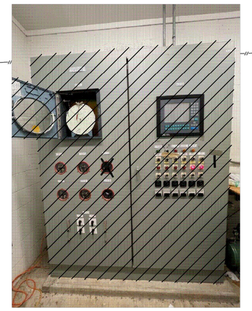

EXISTING CONTROL PANEL

PHOTOGRAPH C (3) NTS -

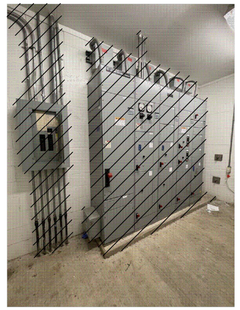

EXISTING MOTOR CONTROL CENTER & LIGHTING PANEL

PHOTOGRAPH D (4) NTS -



EXISTING WW PUMP NO.1, NO.2, NO.3 DISCONNECT

PHOTOGRAPH E (5) NTS -



EXISTING DW PUMP NO.1 & NO.2 DISCONNECT

PHOTOGRAPH F (6) NTS -



EXISTING RADAR TRANSMITTER J-BOX

PHOTOGRAPH F (8) NTS -

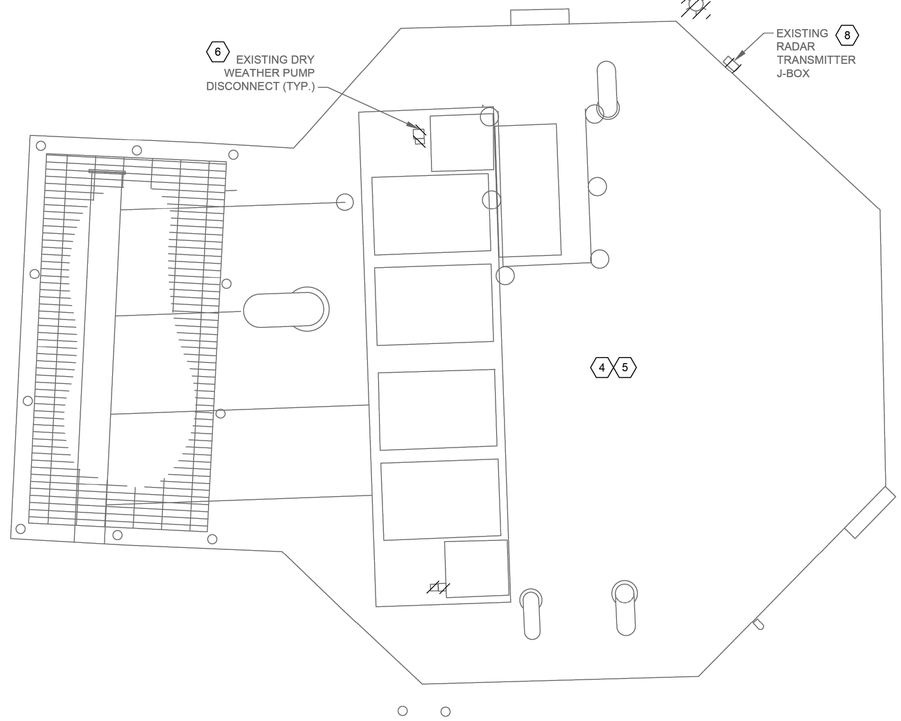

SCOTT #3 ELECTRICAL EXISTING SITE

PLAN

1"= 5'-0"

NOTES BY SYMBOL "(#)":

1. EXISTING SERVICE RACK TO BE DEMOLISHED AND REMOVED.
2. EXISTING WIMAX BOX TO BE DEMOLISHED AND REMOVED.
3. EXISTING CONTROL PANEL TO BE DEMOLISHED AND REMOVED.
4. EXISTING MOTOR CONTROL CENTER & LIGHTING PANEL TO BE DEMOLISHED AND REMOVED.
5. EXISTING WET WEATHER PUMP NO.1 & NO.2 & NO.3 DISCONNECT TO BE DEMOLISHED AND REMOVED.
6. EXISTING DRY WEATHER PUMP NO.1 & NO.2 DISCONNECT TO BE DEMOLISHED AND REMOVED.
7. EXISTING WIMAX & LIGHT POLE TO BE DEMOLISHED AND REMOVED.
8. EXISTING RADAR TRANSMITTER J-BOX TO BE DEMOLISHED AND REMOVED.

NO.	DATE	REVISION	APP.

FOR INTERIM REVIEW ONLY NOT INTENDED FOR PERMIT, BIDDING OR CONSTRUCTION PURPOSES.
ENGINEER:
HOSS FOROUZAN
P.E. SERIAL NO.77748
12/15/2025

GAI
Gupta & Associates, Inc.
CONSULTING ENGINEERING
Registration No. F-2593
302 Dennis St.,
Houston, Texas 77006
Tel: 713-636-2916
Fax: 713-636-2987
email: hforouzan@gaiconsulting.com

IDS Engineering Group
13430 NW. Freeway
Suite 700
Houston, Tx. 77040
713.462.3178
TxEng Firm 2726
TxSurv Firm 10110700

CITY OF HOUSTON
HOUSTON PUBLIC WORKS

LIFT STATION RENEWAL AND REPLACEMENT FY 2023

SCOTT NO.3 LIFT STATION EXISTING SITE PLAN

WBS NUMBER	FOR CITY OF HOUSTON USE ONLY
R-000267-0179-4	
DRAWING SCALE	
HORIZ: VERT:	
CITY OF HOUSTON PM	
NAWARAJ PANTA, P.E.	
SHEET NO. 124 OF 321	

DWG. NO. SCT-E-1

FILE PATH: O:\H8108_Lift Station Rehabilitation And Reconstruction (IDS)\6 Drawings\Electrical\Working\Scott #3\H8108_SCT-E-01.dwg

IDS JOB No. 0057-085-00

PLOTTED: 12/11/2025 8:33 PM

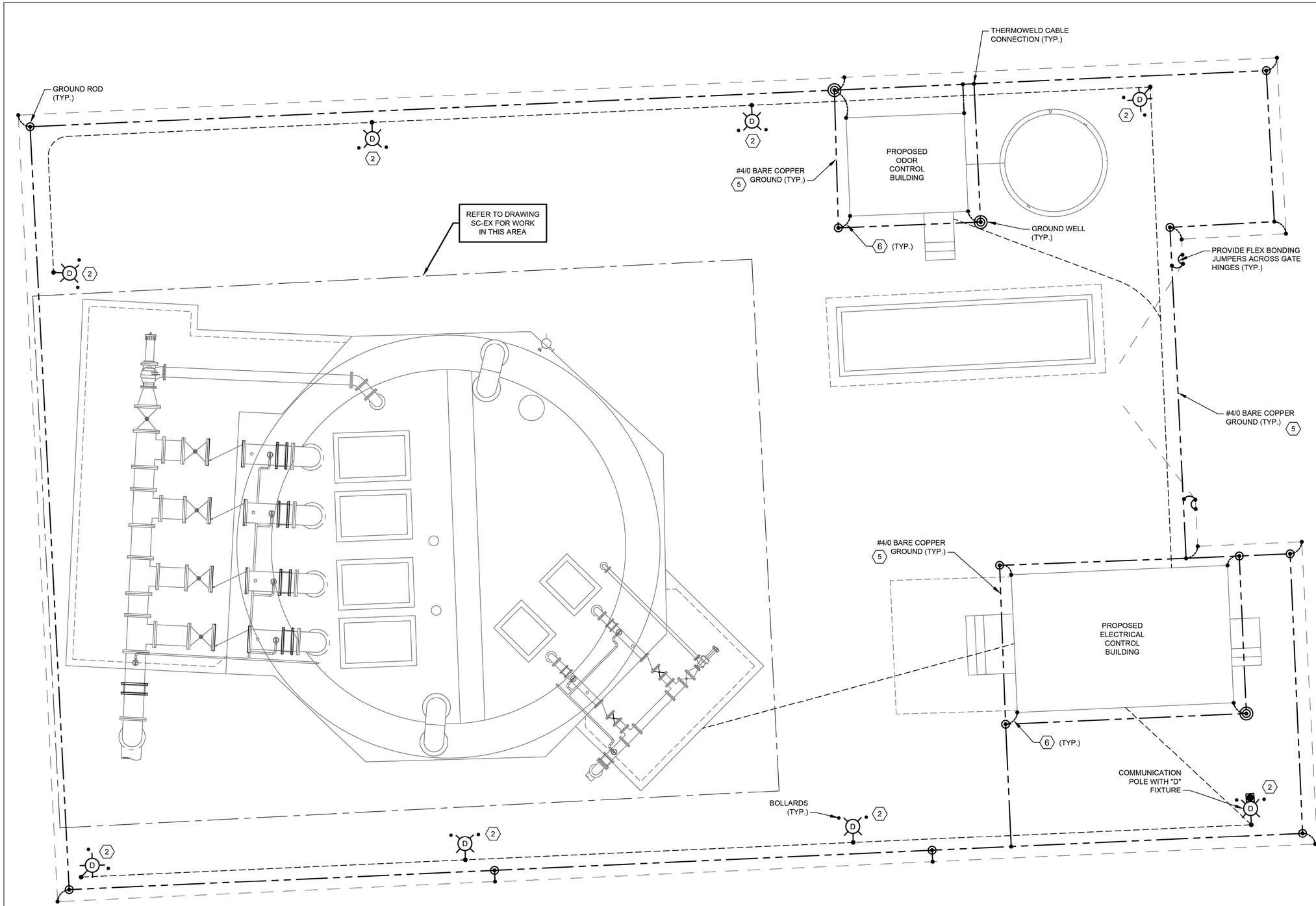

SCOTT #3 ELECTRICAL
PROPOSED SITE
PLAN
1"= 5'-0"

NOTES:

1. THE ELECTRICAL INSTALLATION IN THE WET WELL SHALL BE EXPLOSION PROOF, IN ACCORDANCE WITH THE NATIONAL ELECTRICAL CODE FOR CLASS I, DIVISION 1 LOCATIONS.
2. YARD LIGHT CONTROLLED BY LIGHTING SWITCH.
3. TYPE "B" FIXTURE TO BE INSTALLED ON THE POLE PROVIDING WIRES FOR THE "B" LIGHT.
4. INSIDE WETWELL RATED NEMA CLASS , DIV. 1, OUTSIDE ABOVE GROUND, AROUND WETWELL RATED CLASS 1, DIV. 2 ACCORDING TO NFPA 820.
5. GROUNDING LOOP SHALL BE BURIED 30" BELOW FINISHED GRADE.
6. #4/0 BARE COPPER GROUND TO BE BONDED TO REBAR IN CONCRETE FOOTER.

NO.	DATE	REVISION	APP.

FOR INTERIM REVIEW
ONLY NOT INTENDED FOR
PERMIT, BIDDING OR
CONSTRUCTION PURPOSES.
ENGINEER:
HOSS FOROUZAN
P.E. SERIAL NO.77748
12/15/2025

GAI
Gupta & Associates, Inc.
CONSULTING ENGINEERING
Registration No. F-2593
302 Dennis St.,
Houston, Texas 77006
Tel: 713-636-2936
Fax: 713-636-2987
email: hforouzan@gaiconsulting.com

IDS Engineering Group
13430 NW. Freeway
Suite 700
Houston, Tx. 77040
713.462.3178
TxEng Firm 2726
TxSurv Firm 10110700

CITY OF HOUSTON
HOUSTON PUBLIC WORKS

LIFT STATION RENEWAL
AND REPLACEMENT FY 2023

SCOTT NO.3 LIFT STATION PROPOSED SITE PLAN

WBS NUMBER	FOR CITY OF HOUSTON USE ONLY
R-000267-0179-4	
DRAWING SCALE	
HORIZ: VERT:	
CITY OF HOUSTON PM	
NAWARAJ PANTA, P.E.	
SHEET NO. 125 OF 321	

DWG. NO. SCT-E-2

IDS JOB No. 0057-085-00

FILE PATH: O:\H8108_Lift Station Rehabilitation And Reconstruction (IDS)\6 Drawings\Electrical\Working\Scott #3\H8108_SCT-E-02.dwg

PLOTTED: 12/11/2025 8:33 PM

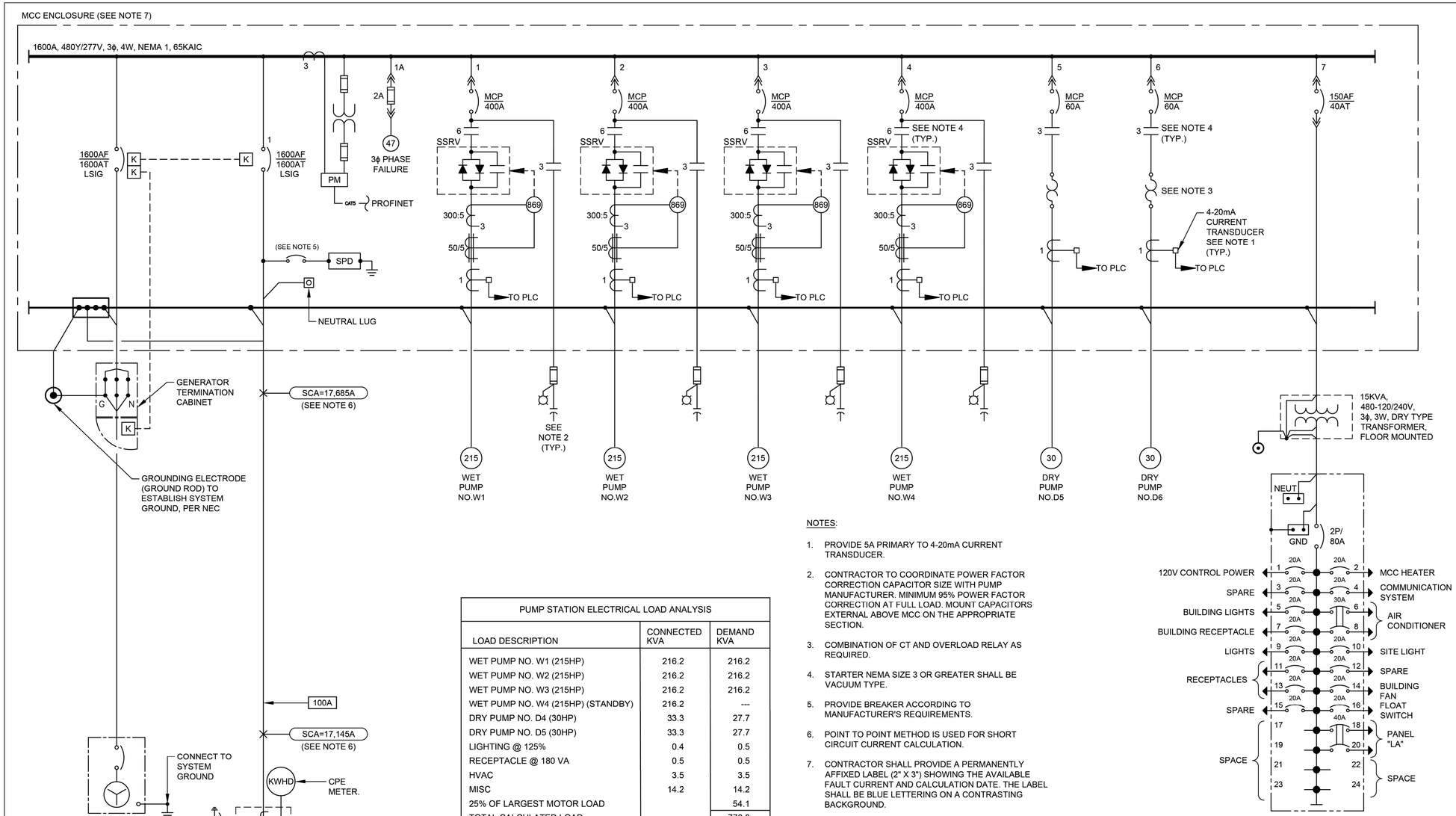

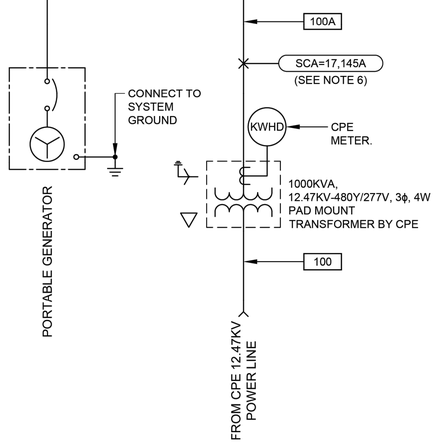

PUMP STATION ELECTRICAL LOAD ANALYSIS		
LOAD DESCRIPTION	CONNECTED KVA	DEMAND KVA
WET PUMP NO. W1 (215HP)	216.2	216.2
WET PUMP NO. W2 (215HP)	216.2	216.2
WET PUMP NO. W3 (215HP)	216.2	216.2
WET PUMP NO. W4 (215HP) (STANDBY)	216.2	---
DRY PUMP NO. D4 (30HP)	33.3	27.7
DRY PUMP NO. D5 (30HP)	33.3	27.7
LIGHTING @ 125%	0.4	0.5
RECEPTACLE @ 180 VA	0.5	0.5
HVAC	3.5	3.5
MISC	14.2	14.2
25% OF LARGEST MOTOR LOAD		54.1
TOTAL CALCULATED LOAD		776.8
776.8KVA @ 480V/3ϕ = 646.3A		
1000A SERVICE EXCEEDS NEC REQUIREMENTS		

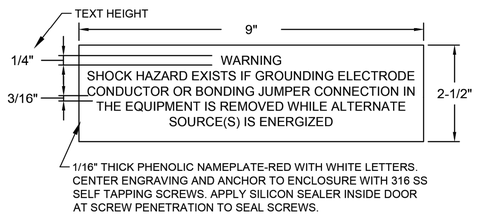

ELECTRICAL WARNING NAMEPLATE N-EW ENGRAVING

NOTES:

1. PROVIDE 5A PRIMARY TO 4-20mA CURRENT TRANSDUCER.
2. CONTRACTOR TO COORDINATE POWER FACTOR CORRECTION CAPACITOR SIZE WITH PUMP MANUFACTURER. MINIMUM 95% POWER FACTOR CORRECTION AT FULL LOAD. MOUNT CAPACITORS EXTERNAL ABOVE MCC ON THE APPROPRIATE SECTION.
3. COMBINATION OF CT AND OVERLOAD RELAY AS REQUIRED.
4. STARTER NEMA SIZE 3 OR GREATER SHALL BE VACUUM TYPE.
5. PROVIDE BREAKER ACCORDING TO MANUFACTURER'S REQUIREMENTS.
6. POINT TO POINT METHOD IS USED FOR SHORT CIRCUIT CURRENT CALCULATION.
7. CONTRACTOR SHALL PROVIDE A PERMANENTLY AFFIXED LABEL (2" X 3") SHOWING THE AVAILABLE FAULT CURRENT AND CALCULATION DATE. THE LABEL SHALL BE BLUE LETTERING ON A CONTRASTING BACKGROUND.
8. THE INSULATION TYPES OF ALL ELECTRICAL CONDUCTOS USED IN THE PROJECT HAVE BEEN SPECIFIED IN ELECTRICAL SPECIFICATIONS (16120, 16121, AND 16122). THE TYPES OF CONDUITS USED IN THE PROJECT HAS BEEN SPECIFIED IN ELECTRICAL SPECIFICATIONS 16111.
9. REFER TO INSTRUMENTATION DRAWINGS SCT-I-10, SCT-I-11, SCT-I-12, SCT-I-13, SCT-I-14, SCT-I-15, FOR PUMP CONTROL SCHEMATIC.

GENERAL NOTES:

1. NO ELECTRICAL MATERIAL, APPARATUS, DEVICES, APPLIANCES, FIXTURES, OR EQUIPMENT SHALL BE SOLD OR INSTALLED IN THE CITY UNLESS THEY ARE IN CONFORMANCE WITH THE PROVISIONS OF SECTION 508 CITY OF HOUSTON ELECTRICAL CODE, THE LAWS OF THE STATE OF TEXAS AND ANY APPLICABLE RULES AND REGULATIONS ISSUED UNDER THE AUTHORITY OF THE STATE STATUES. THE MAKER'S NAME, TRADEMARK, OR OTHER IDENTIFICATION SYMBOL SHALL BE PLACED ON ALL ELECTRICAL MATERIALS, APPARATUS, DEVICES, APPLIANCES, FIXTURES, AND EQUIPMENT USED OR INSTALLED UNDER THE PROVISIONS OF THIS CODE. ALL ELECTRICAL MATERIALS AND EQUIPMENT SHALL BE LISTED AND LABELED FOR THE INTENDED USE AND SHALL BE INCLUDED IN A LIST PUBLISHED BY AN APPROVAL AGENCY.

NO.	DATE	REVISION	APP.

FOR INTERIM REVIEW
ONLY NOT INTENDED FOR
PERMIT, BIDDING OR
CONSTRUCTION PURPOSES.
ENGINEER:
HOSS FOROUZAN
P.E. SERIAL NO.77748
12/15/2025

GAI
Gupta & Associates, Inc
CONSULTING ENGINEERING
Registration No. F-2593
302 Dennis St.,
Houston, Texas 77006
Tel: 713-636-2936
Fax: 713-636-2987
email: hforouzan@gaiconsulting.com

IDS Engineering Group
13430 NW. Freeway
Suite 700
Houston, Tx. 77040
713.462.3178
TxEng Firm 2726
TxSurv Firm 10110700

CITY OF HOUSTON
HOUSTON PUBLIC WORKS

LIFT STATION RENEWAL
AND REPLACEMENT FY 2023

SCOTT NO.3 LIFT STATION
SINGLE LINE DIAGRAM

WBS NUMBER	FOR CITY OF HOUSTON USE ONLY
R-000267-0179-4	
DRAWING SCALE	
HORIZ: VERT:	
CITY OF HOUSTON PM	
NAWARAJ PANTA, P.E.	
SHEET NO. 126 OF 321	

DWG. NO. SCT-E-3

IDS JOB No. 0057-085-00

FILE PATH: O:\H8108_Lift Station Rehabilitation And Reconstruction (IDS)\6 Drawings\Electrical\Working\Scott #3\H8108_SCT-E-03.dwg

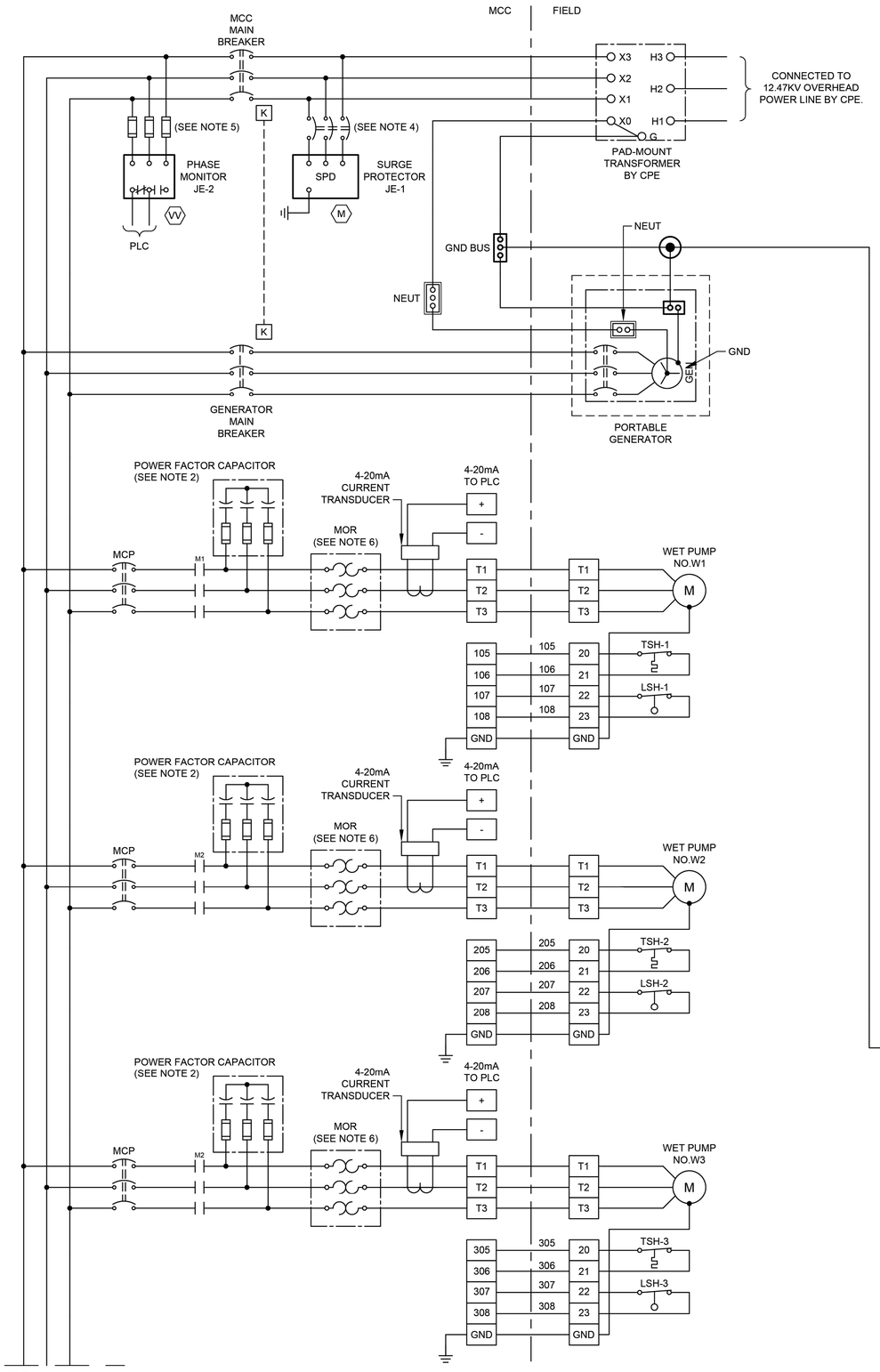

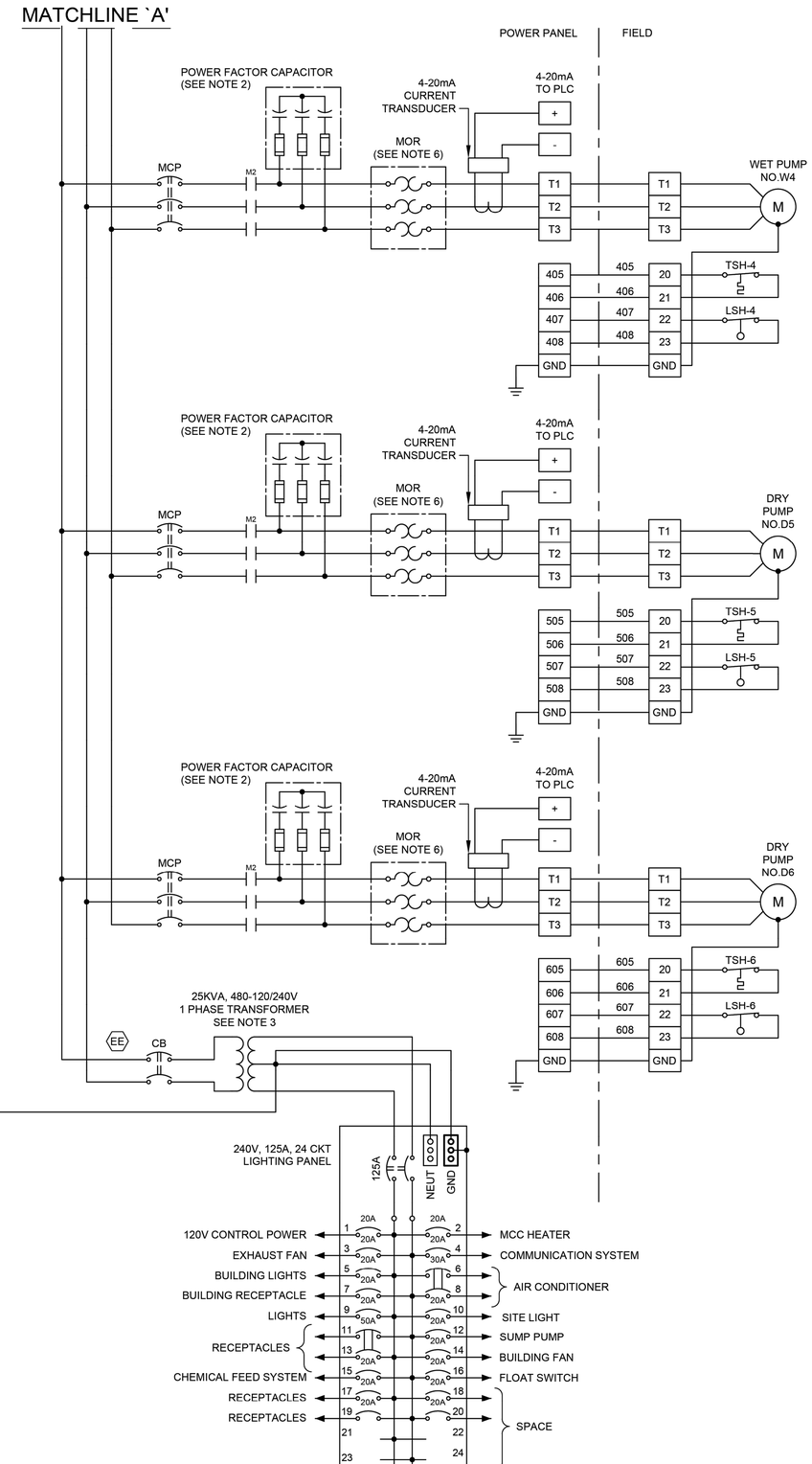

NOTES:

1. UNLESS OTHERWISE INDICATE, ALL DEVICES WITHOUT FURTHER DESIGNATION ARE LOCATED AT THE CONTROL PANEL.
2. CONTRACTOR TO COORDINATE POWER FACTOR CORRECTION CAPACITOR SIZE WITH PUMP MANUFACTURER.
3. CONTRACTOR SHALL TERMINATE POWER & CONTROL WIRES PER MANUFACTURER'S REQUIREMENTS.
4. PROVIDE BREAKER SIZE ACCORDING TO MANUFACTURER'S REQUIREMENTS.
5. PROVIDE FUSE SIZE ACCORDING TO MANUFACTURER'S REQUIREMENTS.
6. THE COMBINATION OF CT AND MOTOR OVERLOAD RELAY IF REQUIRED.

GENERAL NOTES:

1. NO ELECTRICAL MATERIAL, APPARATUS, DEVICES, APPLIANCES, FIXTURES, OR EQUIPMENT SHALL BE SOLD OR INSTALLED IN THE CITY UNLESS THEY ARE IN CONFORMANCE WITH THE PROVISIONS OF SECTION 508 CITY OF HOUSTON ELECTRICAL CODE, THE LAWS OF THE STATE OF TEXAS AND ANY APPLICABLE RULES AND REGULATIONS ISSUED UNDER THE AUTHORITY OF THE STATE STATUES. THE MAKER'S NAME, TRADEMARK, OR OTHER IDENTIFICATION SYMBOL SHALL BE PLACED ON ALL ELECTRICAL MATERIALS, APPARATUS, DEVICES, APPLIANCES, FIXTURES, AND EQUIPMENT USED OR INSTALLED UNDER THE PROVISIONS OF THIS CODE. ALL ELECTRICAL MATERIALS AND EQUIPMENT SHALL BE LISTED AND LABELED FOR THE INTENDED USE AND SHALL BE INCLUDED IN A LIST PUBLISHED BY AN APPROVAL AGENCY.

NO.	DATE	REVISION	APP.

FOR INTERIM REVIEW
ONLY NOT INTENDED FOR
PERMIT, BIDDING OR
CONSTRUCTION PURPOSES.
ENGINEER:
HOSS FOROUZAN
P.E. SERIAL NO.77748
12/15/2025

GAI
Gupta & Associates, Inc.
CONSULTING ENGINEERING
Registration No. F-2593
302 Dennis St.,
Houston, Texas 77006
Tel: 713-636-2936
Fax: 713-636-2987
email: hforouzan@gaiconsulting.com

IDS Engineering Group
13430 NW. Freeway
Suite 700
Houston, Tx. 77040
713.462.3178
TxEng Firm 2726
TxSurv Firm 10110700

CITY OF HOUSTON
HOUSTON PUBLIC WORKS

LIFT STATION RENEWAL
AND REPLACEMENT FY 2023

SCOTT NO.3 LIFT STATION THREE-LINE DIAGRAM

WBS NUMBER	FOR CITY OF HOUSTON USE ONLY
R-000267-0179-4	
DRAWING SCALE	
HORIZ: VERT:	
CITY OF HOUSTON PM	
NAWARAJ PANTA, P.E.	
SHEET NO. 127 OF 321	

DWG. NO. SCT-E-4

IDS JOB No. 0057-085-00

PLOTTED: 12/11/2025 8:33 PM

FILE PATH: O:\H8108_Lift Station Rehabilitation And Reconstruction (IDS)\6 Drawings\Electrical\Working\Scott #3\H8108_SCT-E-04.dwg

PLOTTED: 12/11/2025 8:33 PM

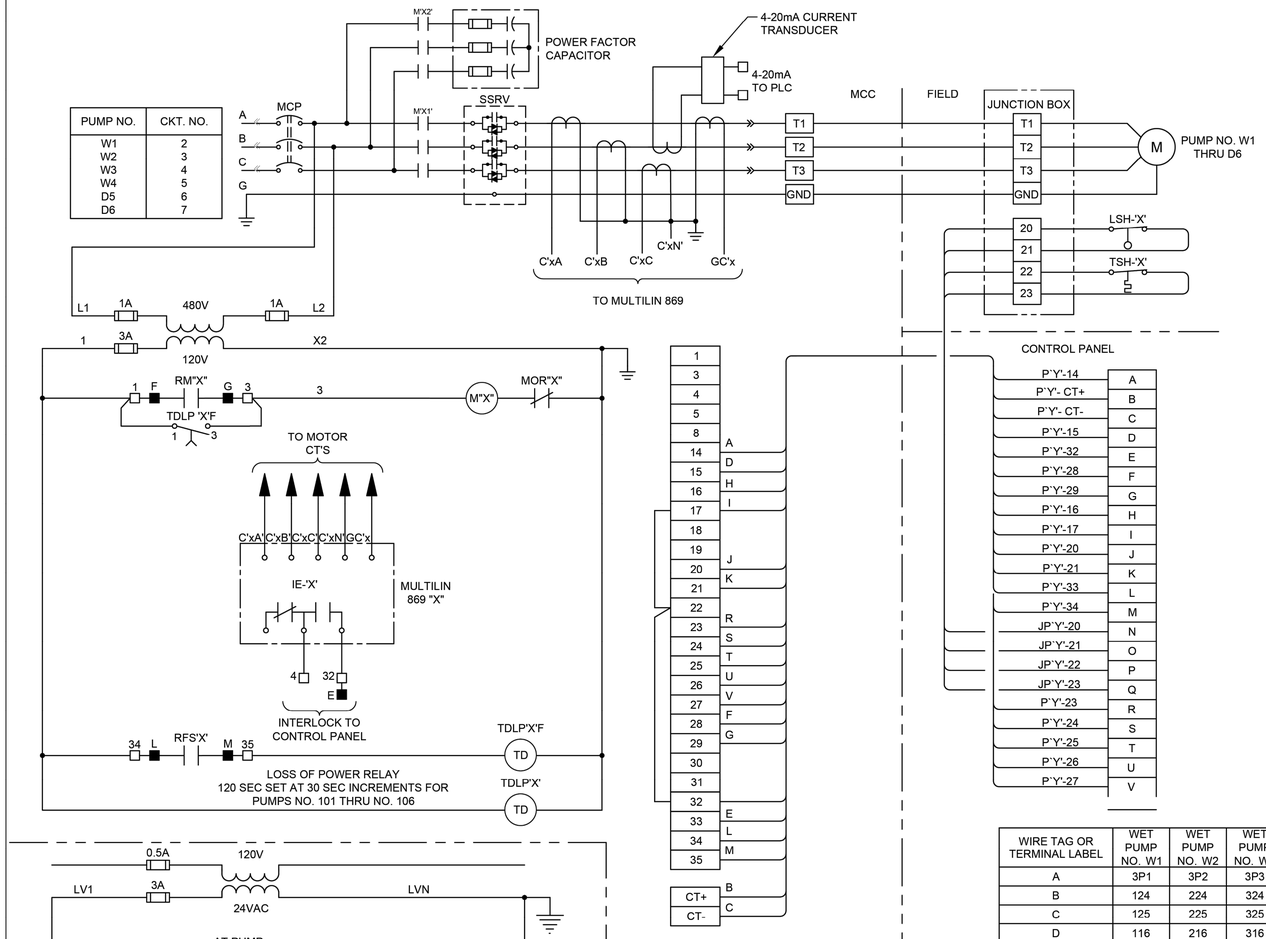

PUMP NO.	CKT. NO.
W1	2
W2	3
W3	4
W4	5
D5	6
D6	7

WIRE TAG OR TERMINAL LABEL	WET PUMP NO. W1	WET PUMP NO. W2	WET PUMP NO. W3	WET PUMP NO. W4	DRY PUMP NO. D5	DRY PUMP NO. D6	FUNCTION
A	3P1	3P2	3P3	3P4	3P5	3P6	24VDC CONTROL
B	124	224	324	424	524	624	4-20mA CURRENT TRANSDUCER
C	125	225	325	425	525	625	4-20mA CURRENT TRANSDUCER
D	116	216	316	416	516	616	M CONTACT
E	117	217	317	417	517	617	OVERLOAD ALARM
F	114	214	314	414	514	614	RUN INTERLOCK
G	115	215	315	415	515	615	RUN INTERLOCK
H	102	202	302	402	502	602	LOSS OF POWER TIMER
I	103	203	303	403	503	603	LOSS OF POWER TIMER
J	118	218	318	418	518	618	ALARM RESET INTERLOCK
K	119	219	319	419	519	619	ALARM RESET INTERLOCK
L	126	226	326	426	526	626	FLOAT SWITCH RUN INTERLOCK
M	127	227	327	427	527	627	FLOAT SWITCH RUN INTERLOCK
N	120	220	320	420	520	620	SEAL LEAK DETECTOR
O	121	221	321	421	521	621	SEAL LEAK DETECTOR
P	122	222	322	422	522	622	MOTOR TEMPERATURE SWITCH
Q	123	223	323	423	523	623	MOTOR TEMPERATURE SWITCH
R	109	209	309	409	509	609	VFD MODE
S	110	210	310	410	510	610	4-20mA VFD SPEED CONTROL
T	111	211	311	411	511	611	4-20mA VFD SPEED CONTROL
U	112	212	312	412	512	612	4-20mA VFD SPEED INDICATION
V	113	213	313	413	513	613	4-20mA VFD SPEED INDICATION

INDOOR MCC SCHEMATIC & WIRING DIAGRAM

SCHEMATIC 1 / -

LEGEND

- △ DEVICE OR FIELD TERMINAL LOCATED AT MOTOR
- ✳ DEVICE OR FIELD TERMINAL LOCATED REMOTE
- □ DEVICE OR FIELD TERMINAL LOCATED AT POWER PANEL
- ■ FIELD TERMINAL LOCATED AT CONTROL PANEL
- ▲ REMOTE TERMINAL
- ● DEVICE TERMINAL NO.
- ◆ PC INTERFACE TERMINAL

NO.	DATE	REVISION	APP.

FOR INTERIM REVIEW
ONLY NOT INTENDED FOR
PERMIT, BIDDING OR
CONSTRUCTION PURPOSES.
ENGINEER:
HOSS FOROUZAN
P.E. SERIAL NO.77748
12/15/2025

GAI
Gupta & Associates, Inc
CONSULTING ENGINEERING
Registration No. F-2593
302 Dennis St.,
Houston, Texas 77006
Tel: 713-636-2936
Fax: 713-636-2987
email: hforouzan@gaiconsulting.com

IDS Engineering Group
13430 NW. Freeway
Suite 700
Houston, Tx. 77040
713.462.3178
TxEng Firm 2726
TxSurv Firm 10110700

CITY OF HOUSTON
HOUSTON PUBLIC WORKS

LIFT STATION RENEWAL AND REPLACEMENT FY 2023

SCOTT NO.3 LIFT STATION MCC SCHEMATIC & WIRING DIAGRAM

WBS NUMBER	FOR CITY OF HOUSTON USE ONLY
R-000267-0179-4	
DRAWING SCALE	
HORIZ: VERT:	
CITY OF HOUSTON PM	
NAWARAJ PANTA, P.E.	
SHEET NO. 128 OF 321	

DWG. NO. SCT–E–5

IDS JOB No. 0057-085-00

FILE PATH: O:\H8108_Lift Station Rehabilitation And Reconstruction (IDS)\6 Drawings\Electrical\Working\Scott #3\H8108_SCT–E–05.dwg

PLOTTED: 12/11/2025 8:33 PM

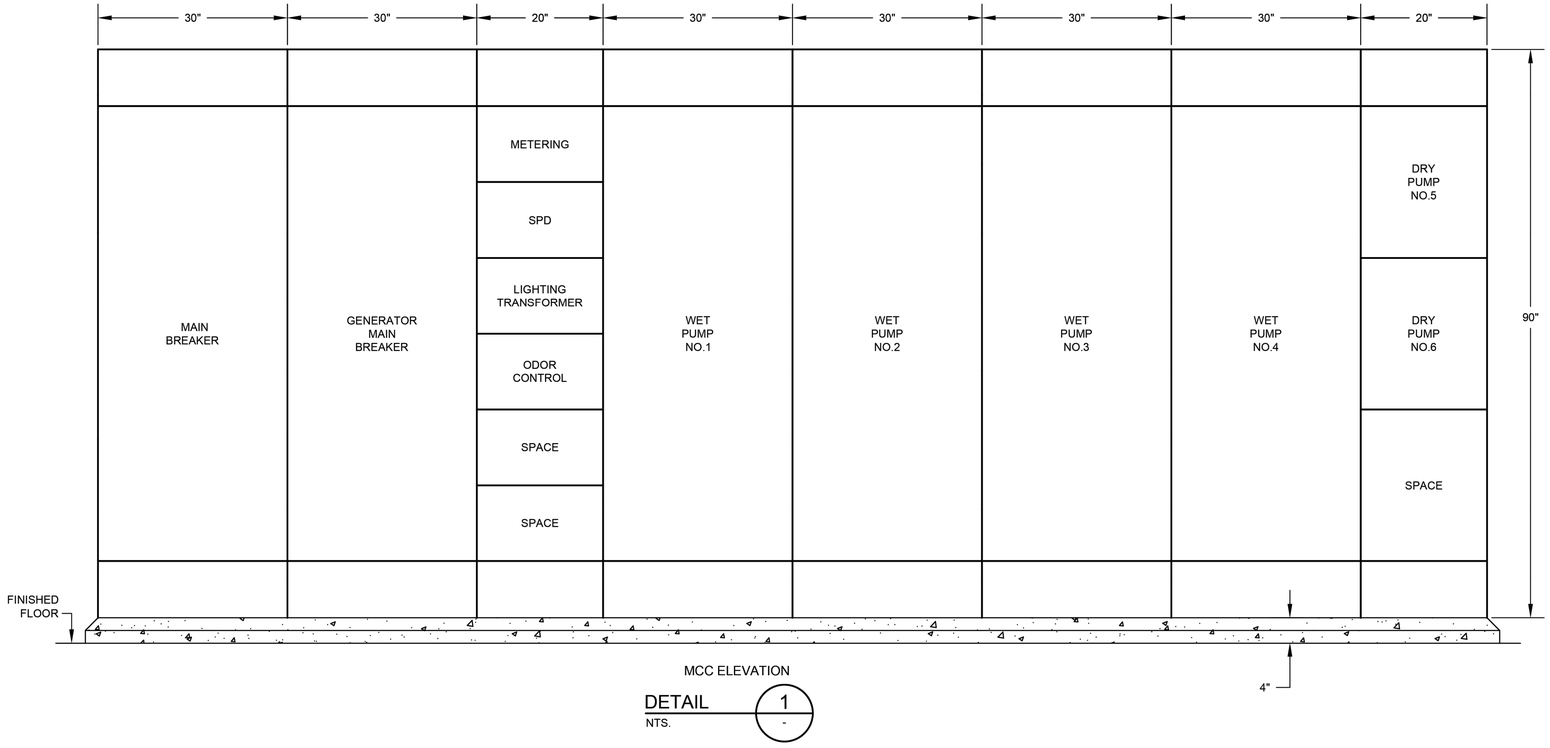

MCC ELEVATION

DETAIL 1
NTS. -

NO.	DATE	REVISION	APP.

FOR INTERIM REVIEW
ONLY NOT INTENDED FOR
PERMIT, BIDDING OR
CONSTRUCTION PURPOSES.
ENGINEER:
HOSS FOROUZAN
P.E. SERIAL NO.77748
12/15/2025

GAI
Gupta & Associates, Inc.
CONSULTING ENGINEERING
Registration No. F-2593
302 Dennis St.,
Houston, Texas 77006
Tel: 713-636-2936
Fax: 713-636-2987
email: hforouzan@gaiconsulting.com

IDS Engineering Group
13430 NW. Freeway
Suite 700
Houston, Tx. 77040
713.462.3178
TxEng Firm 2726
TxSurv Firm 10110700

CITY OF HOUSTON
HOUSTON PUBLIC WORKS

LIFT STATION RENEWAL
AND REPLACEMENT FY 2023

SCOTT NO.3 LIFT STATION
MCC ELEVATION

WBS NUMBER	FOR CITY OF HOUSTON USE ONLY
R-000267-0179-4	
DRAWING SCALE	
HORIZ: VERT:	
CITY OF HOUSTON PM	
NAWARAJ PANTA, P.E.	
SHEET NO. 129 OF 321	

DWG. NO.
SCT-E-6

IDS JOB No. 0057-085-00

FILE PATH: O:\H8108_Lift Station Rehabilitation And Reconstruction (IDS)\6 Drawings\Electrical\Working\Scott #3\H8108_SCT-E-06.dwg

PLOTTED: 12/11/2025 8:33 PM

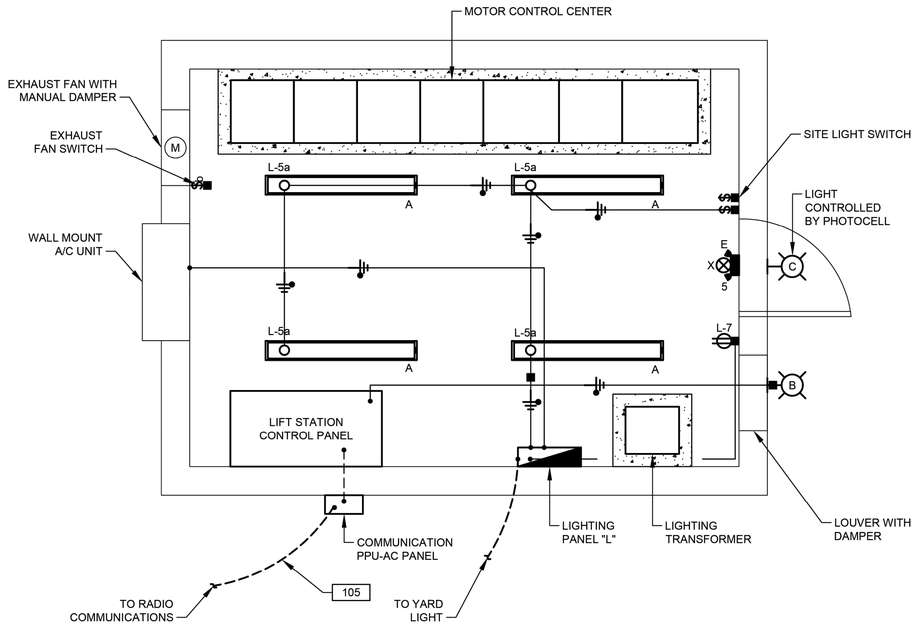

LIGHTING & COMMUNICATION SYSTEM PLAN

1/2"=1'-0"

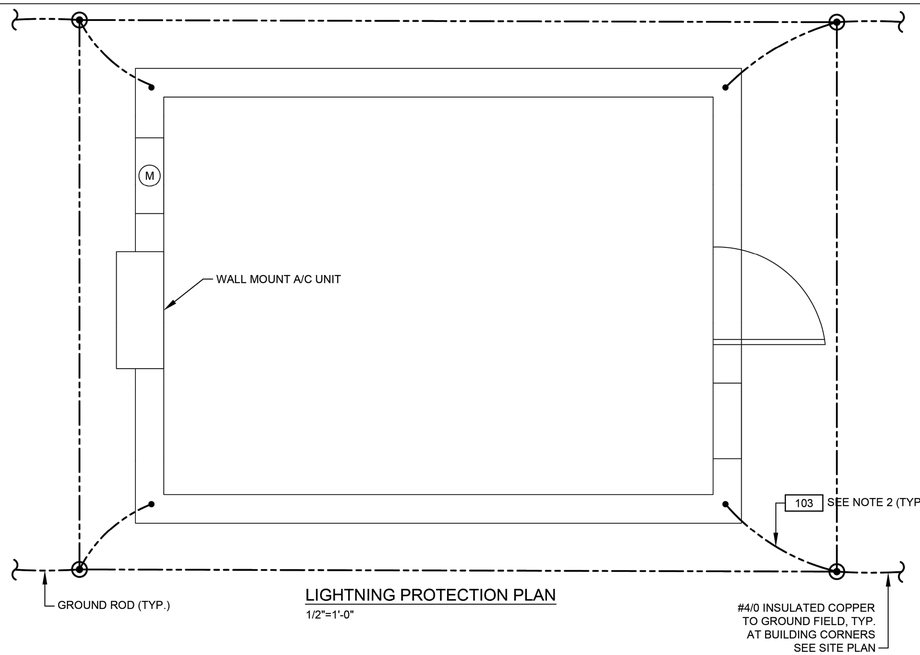

LIGHTNING PROTECTION PLAN

1/2"=1'-0"

NOTES:

1. THERMO WELD BUILDING GROUND CONDUCTOR TO BUILDING REINFORCING STEEL.
2. BOND REBAR IN CONCRETE FOOTER TO GROUND ROD.

NO.	DATE	REVISION	APP.

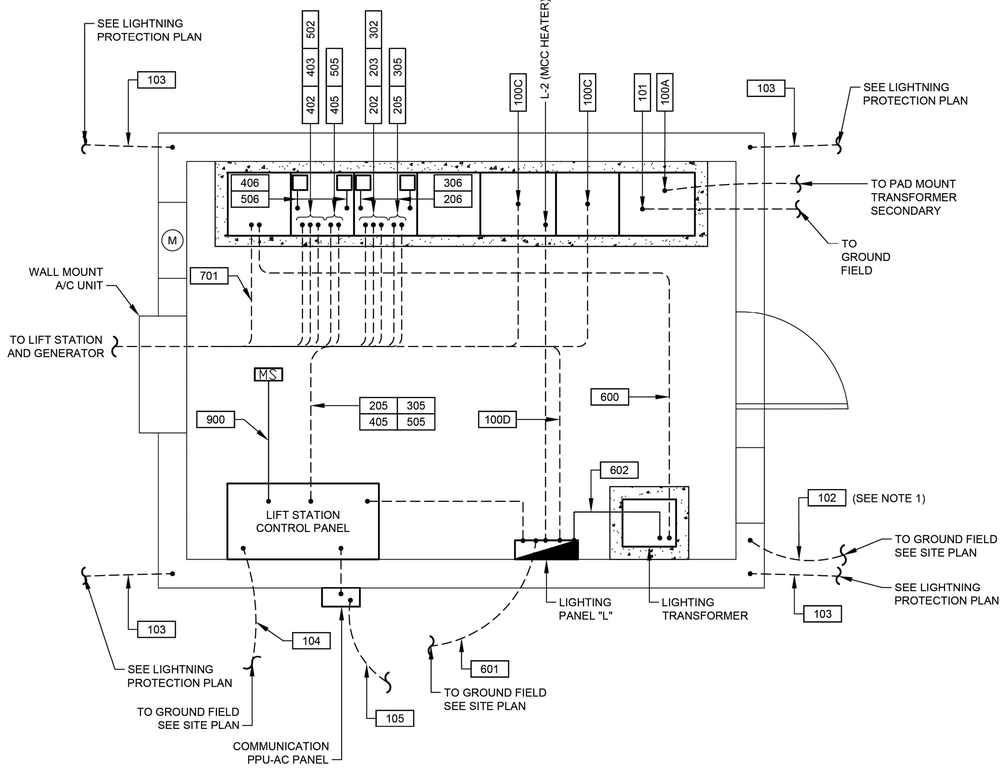

POWER PLAN

1/2"=1'-0"

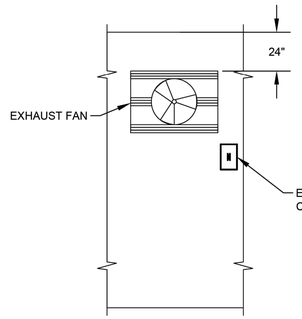

EXHAUST FAN

NTS.

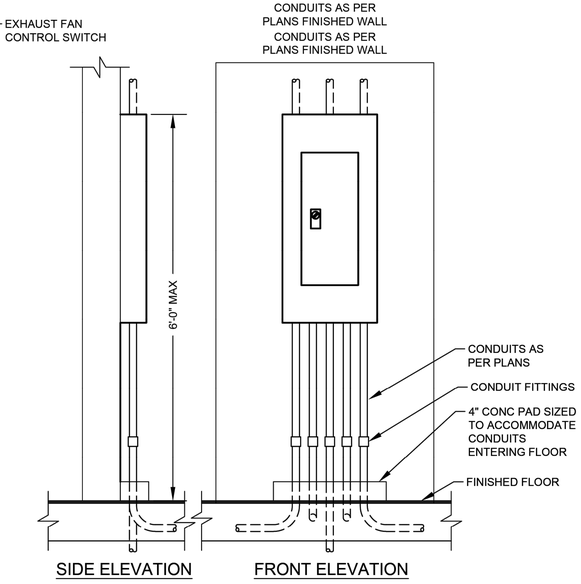

SIDE ELEVATION FRONT ELEVATION

TYPICAL PANEL INSTALLATION

DETAIL - NTS.

FOR INTERIM REVIEW
ONLY NOT INTENDED FOR
PERMIT, BIDDING OR
CONSTRUCTION PURPOSES.
ENGINEER:
HOSS FOROUZAN
P.E. SERIAL NO.77748
12/15/2025

GAI
Gupta & Associates, Inc.
CONSULTING ENGINEERING
Registration No. F-2593
302 Dennis St.,
Houston, Texas 77006
Tel: 713-636-2936
Fax: 713-636-2987
email: hforouzan@gaiconsulting.com

IDS Engineering Group
13430 NW. Freeway
Suite 700
Houston, Tx. 77040
713.462.3178
TxEng Firm 2726
TxSurv Firm 10110700

CITY OF HOUSTON

HOUSTON PUBLIC WORKS

LIFT STATION RENEWAL AND REPLACEMENT FY 2023

SCOTT NO.3 LIFT STATION CONTROL BUILDING PLAN

WBS NUMBER	FOR CITY OF HOUSTON USE ONLY
R-000267-0179-4	
DRAWING SCALE	
HORIZ: VERT:	
CITY OF HOUSTON PM	
NAWARAJ PANTA, P.E.	

DWG. NO.	SHEET NO. 130 OF 321
SCT-E-7	

IDS JOB No. 0057-085-00

FILE PATH: O:\H8108_Lift Station Rehabilitation And Reconstruction (IDS)\6 Drawings\Electrical\Working\Scott #3\H8108_SCT-E-07.dwg

PLOTTED: 12/11/2025 8:33 PM

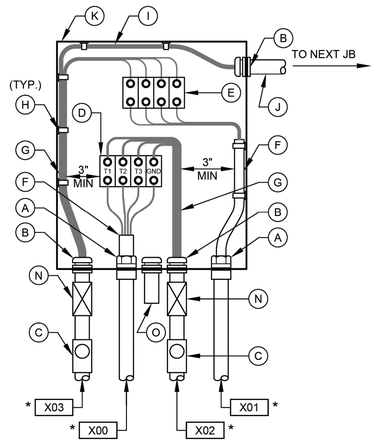

PUMP NO.1 & NO.3 & NO.5
JUNCTION BOX

DETAIL 3
NTS
(SEE NOTE 7)

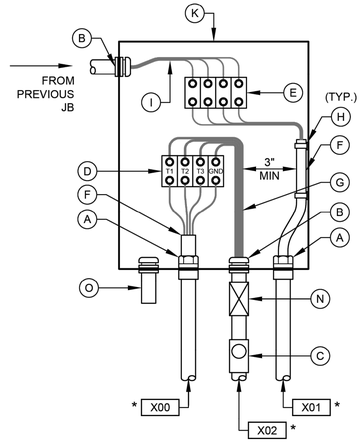

PUMP NO.2 & NO.4 & NO.6
JUNCTION BOX

DETAIL 4
NTS
(SEE NOTE 7)

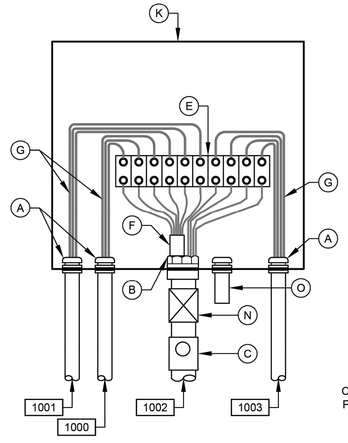

LEVEL TRANSMITTER
JUNCTION BOX

DETAIL 6
NTS
(SEE NOTE 7)

✱ REPLACE `X' PER NOTATION SCHEDULE

NOTATION SCHEDULE

`X'	PUMP NO.
2	1
3	2
4	3
5	4
6	5
7	6

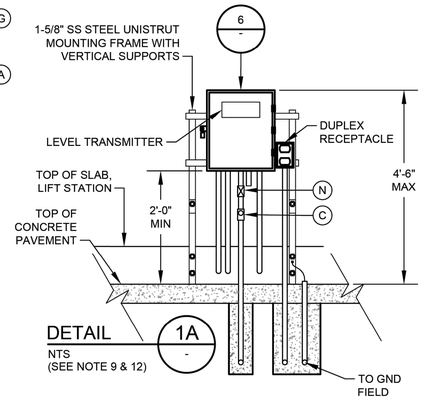

DETAIL 1A
NTS
(SEE NOTE 9 & 12)

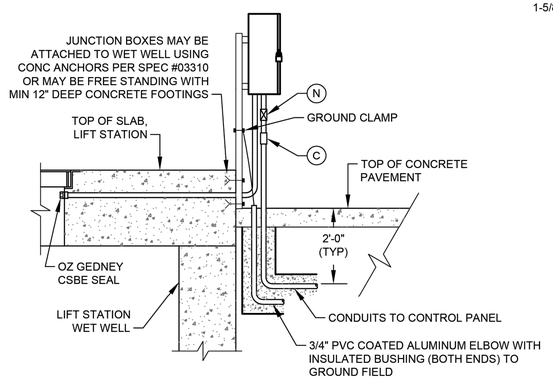

TYP SIDE VIEW FOR DETAIL 1, 1A, 2, & 7

(SEE NOTE 10)

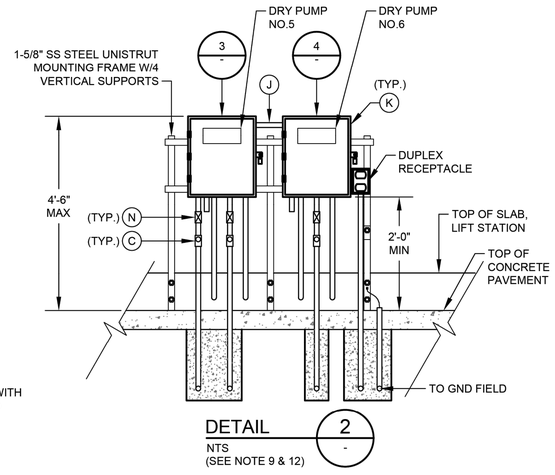

DETAIL 2
NTS
(SEE NOTE 9 & 12)

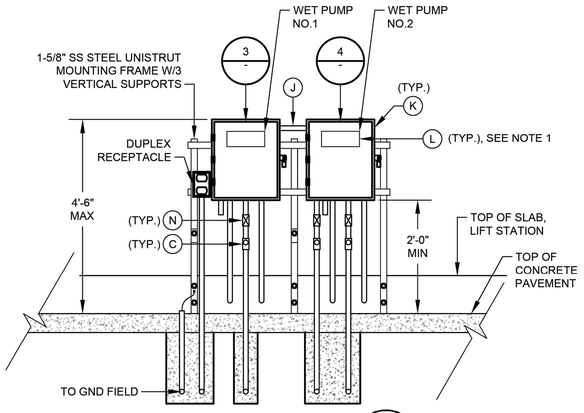

DETAIL 1
NTS
(SEE NOTE 9 & 12)

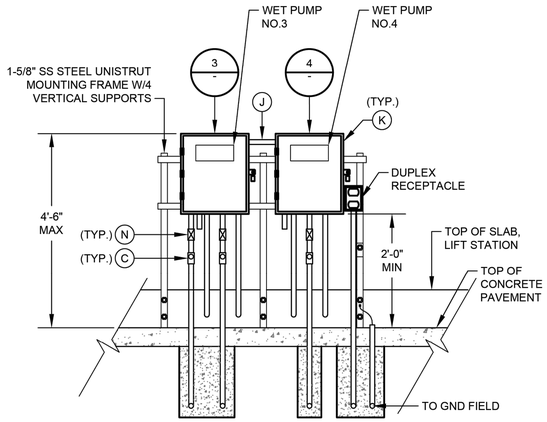

DETAIL 7
NTS
(SEE NOTE 11)

JUNCTION BOX EQUIPMENT SCHEDULE

- A - OZ GEDNEY CSBE SEAL
- B - WATERTIGHT CONDUIT HUB WITH INSULATED BUSHING
- C - CLASS I, DIV 1, EXPLOSION PROOF SEAL INSTALLED PER NEC DIV 501
- D - POWER TERMINAL BLOCK W/SCREW DOWN BOX LUGS
- E - CONTROL TERM BLOCK W/SCREW DOWN BOX LUGS
- F - MULTI-CONDUCTOR CABLE, REMOVE OUTER JACKET AS SHOWN
- G - WIRING AS SCHEDULED
- H - WIRING HARNESS PERMANENTLY AFFIXED
- I - PUMP CONTROL WIRING FROM PUMPS 2; 2 & 3; 4; OR D2, AS APPLICABLE
- J - 1 1/2" PVC COATED CONDUIT NIPPLE
- K - NEMA 4X STAINLESS STEEL JUNCTION BOX WITH GASKETED FRONT COVER, SINGLE QUARTER TURN, OIL-TIGHT LATCH AND PADLOCKING PROVISIONS, HOFFMAN D-3L16H1206 SS LF OR EQUAL. MINIMUM SIZE: 12"W X 16"H X 6"D
- L - NAMEPLATE, SEE SPECIFICATIONES (SEE NAMEPLATE SCHEDULE)
- M - MOTOR RATED SWITCH
- N - EXPANSION FITTING
- O - DRAIN VENT

NOTES:

1. NAMEPLATES SHALL BE MOUNTED TO JUNCTION BOXES USING 316 STAINLESS STEEL HARDWARE.
2. MAINTAIN MINIMUM SEPARATION REQUIRED UNDER NEC ARTICLE 504, BETWEEN INTRINSICALLY SAFE CONTROL WIRING AND NON INTRINSICALLY SAFE MOTOR FEEDER WIRING.
3. UNLESS OTHERWISE NOTED, ALL EXTERIOR EXPOSED CONDUITS SHALL BE PVC COATED ALUMINUM.
4. UNLESS OTHERWISE NOTED, ALL NUTS, BOLTS, SCREWS WASHERS, ETC SHALL BE TYPE 316 STAINLESS STEEL.
5. ALL UNDERGROUND CONDUITS TO BE ENCASED IN REINFORCED CONCRETE DUCTBANK.
6. PROVIDE ANTI-CORROSIVE SPRAY ON ANY BARE METAL PARTS OR EXPOSED WIRE.
7. SEE WIRING SCHEMATICS FOR TERMINALS AND WIRE NUMBERS.
8. ANY CONDUIT REQUIRING A CSBE SEAL, SHALL BE A MINIMUM SIZE OF 2 1/2" PER CABLE.
9. DETAIL SHOWN MAY BE MODIFIED PER SITE SITUATION.
10. COORDINATE WITH WASTE WATER OPERATIONS ELECTRICAL ORGANIZATION FOR THE OPENING OF JUNCTION BOXES TO THE SIDE OF WET WELL IF REQUIRED DURING CONSTRUCTION.
11. THE ENCLOSURES WITH ELECTRICAL CIRCUITS SHALL BE A MINIMUM OF 5 FEET FROM ANY CLASSIFIED AREA, OTHERWISE EXPLOSION PROOF TYPE ENCLOSURES SHALL BE USED.
12. THE RECEPTACLES SHALL BE EXPLOSION PROOF TYPE IF INSTALLED WITHIN 5 FEET OF CLASSIFIED AREA, SHALL BE FIELD VERIFIED.

NO.	DATE	REVISION	APP.

FOR INTERIM REVIEW
ONLY NOT INTENDED FOR
PERMIT, BIDDING OR
CONSTRUCTION PURPOSES.
ENGINEER:
HOSS FOROUZAN
P.E. SERIAL NO.77748
12/15/2025

GAI
Gupta & Associates, Inc.
CONSULTING ENGINEERING
Registration No. F-2593
302 Dennis St.,
Houston, Texas 77006
Tel: 713-636-2936
Fax: 713-636-2987
email: hforouzan@gaiconsulting.com

IDS Engineering Group
13430 NW. Freeway
Suite 700
Houston, Tx. 77040
713.462.3178
TxEng Firm 2726
TxSurv Firm 10110700

CITY OF HOUSTON
HOUSTON PUBLIC WORKS

LIFT STATION RENEWAL
AND REPLACEMENT FY 2023

SCOTT NO.3 LIFT STATION JUNCTION BOX DETAILS

WBS NUMBER	FOR CITY OF HOUSTON USE ONLY
R-000267-0179-4	
DRAWING SCALE	
HORIZ: VERT:	
CITY OF HOUSTON PM	
NAWARAJ PANTA, P.E.	

DWG. NO.	SHEET NO. 131 OF 321
SCT-E-8	

IDS JOB No. 0057-085-00

FILE PATH: O:\H8108_Lift Station Rehabilitation And Reconstruction (IDS)\6 Drawings\Electrical\Working\Scott #3\H8108_SCT-E-08.dwg

PLOTTED: 12/11/2025 8:34 PM

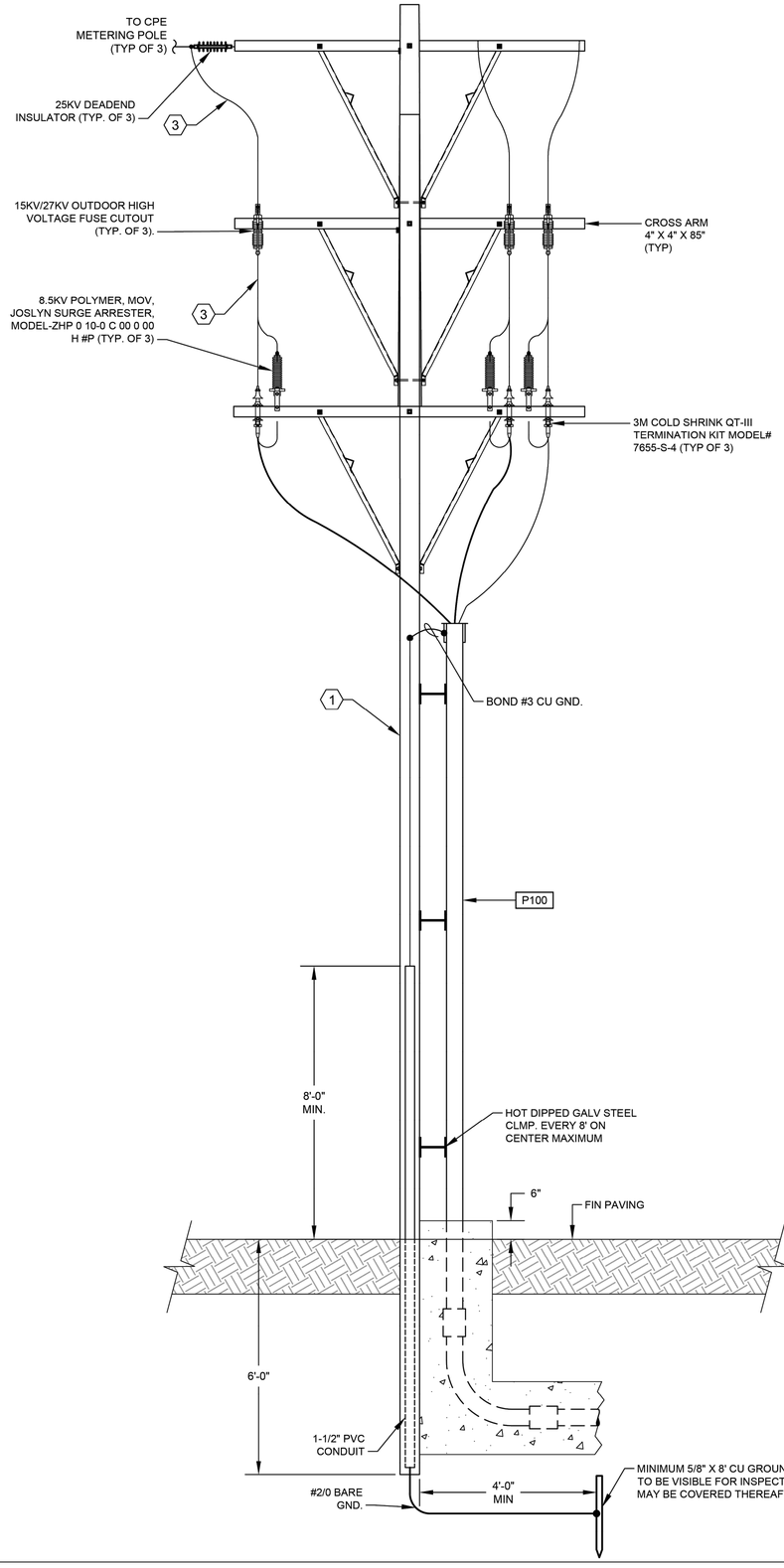

ELECTRICAL SERVICE POLE

DETAIL 1
NTS. -

NOTES BY SYMBOL "⟨#⟩":

⟨1⟩ NEW CLASS 2 WOOD SERVICE POLE, 45'-0" LONG.

⟨2⟩ THE BURIAL DEPTH SHALL BE 6'-0" MINIMUM.

⟨3⟩ #2 AWG., CU., 15KV SHIELDED 133% INSULATION, WET LOCATION SUNLIGHT RESISTANT TYPE MV CABLE.

⟨4⟩ THE CONDUCTORS TO BE PROVIDED AND INSTALLED BY CPE.

GENERAL NOTES:

1. ALL CROSS ARMS WITH BRACINGS SHALL BE PROPERLY INSTALLED.
2. ALL AHRDWARE SHALL BE HOT DIPPED GALV. STEEL..
3. THE HOLE IN THE GROUND AROUND THE CONCRETE POLE SHALL BE BACKFILLED WITH CRUSHED LIME STONE AND SHALL BE PROPERLY STAMPED.

NO.	DATE	REVISION	APP.

FOR INTERIM REVIEW
ONLY NOT INTENDED FOR
PERMIT, BIDDING OR
CONSTRUCTION PURPOSES.
ENGINEER:
HOSS FOROUZAN
P.E. SERIAL NO.77748
12/15/2025

GAI
Gupta & Associates, Inc.
CONSULTING ENGINEERING
Registration No. F-2593
302 Dennis St.,
Houston, Texas 77006
Tel: 713-636-2936
Fax: 713-636-2987
email: hforouzan@gaiconsulting.com

IDS Engineering Group
13430 NW. Freeway
Suite 700
Houston, Tx. 77040
713.462.3178
TxEng Firm 2726
TxSurv Firm 10110700

CITY OF HOUSTON
HOUSTON PUBLIC WORKS

LIFT STATION RENEWAL AND REPLACEMENT FY 2023

SCOTT NO.3 LIFT STATION SERVICE POLE DETAIL

WBS NUMBER	FOR CITY OF HOUSTON USE ONLY
R-000267-0179-4	
DRAWING SCALE	
HORIZ: VERT:	
CITY OF HOUSTON PM	
NAWARAJ PANTA, P.E.	
SHEET NO. 132 OF 321	

DWG. NO. SCT-E-9

IDS JOB No. 0057-085-00

FILE PATH: O:\H8108_Lift Station Rehabilitation And Reconstruction (IDS)\6 Drawings\Electrical\Working\Scott #3\H8108_SCT-E-09.dwg

	DESCRIPTION	SERVICE		ROUTING			CONDUIT & WIRE SIZE
		VOLTAGE	AMPS OR HP	FROM	TO	VIA	
A	MAIN BONDING JUMPER	--	--	MAIN FUSED DISCONNECT NEUTRAL	MAIN FUSED DISCONNECT GROUND	--	#4/0 GND.
B	EQUIPMENT BONDING JUMPER	--	--	MCC/POWER PANEL ENCLOSURE	POWER/CONTROL PANEL & EQUIPMENT GROUNDING	--	#4/0 GND.
C	GROUNDED ELECTRODE CONDUCTOR	--	--	GROUNDING ELECTRODE	MAIN SERVICE FUSED DISCONNECT	--	#4/0 GND.
100	SERVICE ENTRANCE	12.47KV	60A	12.47KV SERVICE POLE	PAD MOUNT TRANSFORMER PRIMARY	--	3#1 AWG., SHIELDED 15KV, #6 GND., 4"C.
100A	UTILITY POWER ENTRANCE	480V	1600A	PAD MOUNT TRANSFORMER SECONDARY	UTILITY MAIN BREAKER IN MCC	--	4 SETS OF 3 #600MCM, #2 NEUT., #2 GND., 4"C. EA.
100B	GENERATOR POWER ENTRANCE	480V	1600A	GENERATOR TERMINATION CABINET	GENERATOR MAIN BREAKER IN MCC	--	3#4 AWG., #8 GND., 1-1/2" C.
100C	NORMAL/EMERGENCY POWER STATUS	24VDC	--	MAIN BREAKER AUXILIARY CONTACTS IN MCC	CONTROL PANEL	--	6#14 AWG., #14 GND., 3/4" C.
101	GROUND ELECTRODE CONDUCTOR	--	--	MCC GROUND BUS	GROUND FIELD	--	#4/0 GND.
102	GROUND ELECTRODE CONDUCTOR	--	--	BUILDING STEEL	GROUND FIELD	--	#4/0 GND.
103	BUILDING GROUNDING	--	--	BUILDING REBAR	GROUND ROD	--	#4/0 GND.
104	GROUND ELECTRODE CONDUCTOR	--	--	CONTROL PANEL	GROUND FIELD	--	2/0 GND.
105	COMMUNICATION	--	--	COMMUNICATION POLE	CONTROL PANEL	--	1-1/2"C. CAT-5E
200	PUMP NO.101 POWER	480V	215 HP	PUMP NO.101	PUMP NO.101 JUNCTION BOX	--	MANUFACTURER CABLE IN 4"C.
201	PUMP NO.101 CONTROLS	120V	--	PUMP NO.101	PUMP NO.101 JUNCTION BOX	--	MANUFACTURER CABLE IN 2-1/2"C.
202	PUMP NO.101 POWER	480V	215 HP	PUMP NO.101 JUNCTION BOX	PUMP STARTER	--	2 SETS OF 350MCM, #3 GND., 3"C. EA.
203	COMBINED PUMP CONTROLS	120V	--	PUMP NO.101 JUNCTION BOX	PUMP STARTER	--	COMBINE 200 & 300 WIRING, 10#14 1"C.
205	PUMP NO.101 CONTROLS	120V	--	STARTER IN MOTOR CONTROL CENTER	CONTROL PANEL	--	20#14, 1PR.#16, 1-1/2" C.
206	PUMP NO.101 CAPACITOR	480V	TBD	PUMP NO.101 MOTOR STARTER	POWER FACTOR CORRECTION CAPACITOR	--	3#1, #6 GND., 2"C.
300	PUMP NO.102 POWER	480V	215 HP	PUMP NO.102	PUMP NO.102 JUNCTION BOX	--	MANUFACTURER CABLE IN 4"C.
301	PUMP NO.102 CONTROLS	120V	--	PUMP NO.102	PUMP NO.102 JUNCTION BOX	--	MANUFACTURER CABLE IN 2-1/2"C.
302	PUMP NO.102 POWER	480V	215 HP	PUMP NO. 102 JUNCTION BOX	PUMP STARTER	--	3#1, #6 GND., 2"C.
305	PUMP NO.102 CONTROLS	120V	--	STARTER IN MOTOR CONTROL CENTER	CONTROL PANEL	--	20#14, 1PR.#16, 1-1/2" C.
306	PUMP NO.102 CAPACITOR	480V	TBD	PUMP NO. 102 MOTOR STARTER	POWER FACTOR CORRECTION CAPACITOR	--	3#1, #6 GND., 2"C.
400	PUMP NO. 103 POWER	480V	215 HP	PUMP NO. 103	PUMP NO.103 JUNCTION BOX	--	MANUFACTURER CABLE IN 4"C.
401	PUMP NO. 103 CONTROLS	120V	--	PUMP NO. 103	PUMP NO.103 JUNCTION BOX	--	MANUFACTURER CABLE IN 2-1/2"C.
402	PUMP NO. 103 POWER	480V	215 HP	PUMP NO. 103 JUNCTION BOX	PUMP STARTER	--	2 SETS OF 350MCM, #3 GND., 3"C. EA.
403	COMBINED PUMP CONTROLS	120V	--	PUMP NO. 103 JUNCTION BOX	CONTROL PANEL	--	COMBINE 400 & 500 WIRING, 10#14 1"C.
405	PUMP NO.103 CONTROLS	120V	--	STARTER IN MOTOR CONTROL CNETER	CONTROL PANEL	--	20#14, 1PR.#16, 1-1/2" C.
406	PUMP NO.103 CAPACITOR	480V	TBD	PUMP NO. 103 MOTOR STARTER	POWER FACTOR CORRECTION CAPACITOR	--	3#1, #6 GND., 2"C.
500	PUMP NO.104 POWER	480V	215 HP	PUMP NO. 104	PUMP NO.104 JUNCTION BOX	--	MANUFACTURER CABLE IN 4"C.
501	PUMP NO.104 CONTROLS	120V	--	PUMP NO. 104	PUMP NO.104 JUNCTION BOX	--	MANUFACTURER CABLE IN 2-1/2"C.
502	PUMP NO.104 POWER	480V	215 HP	PUMP NO. 104 JUNCTION BOX	PUMP STARTER	--	2 SETS OF 350MCM, #3 GND., 3"C. EA.
505	PUMP NO.104 CONTROLS	120V	--	STARTER IN MOTOR CONTROL CENTER	CONTROL PANEL	--	20#14, 1PR.#16, 1-1/2" C.
506	PUMP NO.104 CAPACITOR	480V	TBD	PUMP NO. 104 MOTOR STARTER	POWER FACTOR CORRECTION CAPACITOR	--	3#1, #6 GND., 2"C.
600	PUMP NO.105 POWER	480V	30 HP	PUMP NO. 105	PUMP NO.105 JUNCTION BOX	--	MANUFACTURER CABLE IN 4"C.
601	PUMP NO.105 CONTROLS	120V	--	PUMP NO. 105	PUMP NO.105 JUNCTION BOX	--	MANUFACTURER CABLE IN 2-1/2"C.
602	PUMP NO.105 POWER	480V	30 HP	PUMP NO. 105 JUNCTION BOX	PUMP STARTER	--	2 SETS OF 350MCM, #3 GND., 3"C. EA.
603	COMBINED PUMP CONTROLS	120V	--	PUMP NO. 105 JUNCTION BOX	PUMP STARTER	--	COMBINE 600 & 700 WIRING, 10#14 1"C.
605	PUMP NO.105 CONTROLS	120V	--	STARTER IN MOTOR CONTROL CENTER	CONTROL PANEL	--	20#14, 1PR.#16, 1-1/2" C.
700	PUMP NO.106 POWER	480V	30 HP	PUMP NO. 106	PUMP NO.102 JUNCTION BOX	--	MANUFACTURER CABLE IN 4"C.
701	PUMP NO.106 CONTROLS	120V	--	PUMP NO. 106	PUMP NO.102 JUNCTION BOX	--	MANUFACTURER CABLE IN 2-1/2"C.
702	PUMP NO.106 POWER	480V	30 HP	PUMP NO. 106 JUNCTION BOX	PUMP STARTER	--	3#1, #6 GND., 2"C.
705	PUMP NO.106 CONTROLS	120V	--	STARTER IN MOTOR CONTROL CENTER	CONTROL PANEL	--	20#14, 1PR.#16, 1-1/2" C.
900	LIGHTING TRANSFORMER FEEDER	480V	40A	MOTOR CONTROL CENTER	LIGHTING TRANSFORMER	--	2#6 AWG., #8 GND., 3/4" C.
901	LIGHTING TRANSFORMER GROUND	--	--	LIGHTING PANEL	GROUND FIELD	--	#8 GND., 1"C.
902	LIGHTING PANEL FEEDER	120/240V	80A	LIGHTING TRANSFORMER	LIGHTING PANEL	--	3#3 AWG., #6 GND., 1"C.
903	INTRUSION ALARM	24VDC	--	MOTION SWITCH	CONTROL PANEL	--	2#14, 3/4"C.
1000	LEVEL TRANSMITTER LT-1	24VDC	--	TRANSMITTER	TRANSMITTER JUNCTION BOX	--	MANUFACTURER CABLE IN 2-1/2"C.
1001	LEVEL TRANSMITTER LT-2	24VDC	--	TRANSMITTER	TRANSMITTER JUNCTION BOX	--	MANUFACTURER CABLE IN 2-1/2"C.
1002	COMBINED LEVEL TRANSMITTERS & FLOAT SWITCH	24VDC	--	CONTROL PANEL	TRANSMITTER JUNCTION BOX	--	2 TRI, 4 #14, 2"C.
1003	WELL FLOAT SWITCHES	24VDC	--	TRANSMITTER JUNCTION BOX	FLOAT SWITCH NO.1	--	MANUFACTURER CABLE IN 2-1/2"C.
1100	120VAC FOR RECEPTACLE	120V	--	LIGHTING PANEL	RECEPTACLE NEXT TO TRANSMITTER J-BOX	--	2 #12, #12 G, 1"C.
1200	120VAC FOR RECEPTACLE	120V	--	LIGHTING PANEL	RECEPTACLE NEXT TO PUMP NO. 103 J-BOX	--	2 #12, #12 G, 1"C.
1300	SITE LIGHTING	120V	--	LIGHTING PANEL	SITE LIGHTS	VIA SITE LIGHTING SWITCH	2#12, #12 G, 1"C.

NO.	DATE	REVISION	APP.

FOR INTERIM REVIEW
ONLY NOT INTENDED FOR
PERMIT, BIDDING OR
CONSTRUCTION PURPOSES.
ENGINEER:
HOSS FOROUZAN
P.E. SERIAL NO.77748
12/15/2025

GAI
Gupta & Associates, Inc.
CONSULTING ENGINEERING
Registration No. F-2593
302 Dennis St.,
Houston, Texas 77006
Tel: 713-636-2936
Fax: 713-636-2987
email: hforouzan@gaiconsulting.com

IDS Engineering Group
13430 NW. Freeway
Suite 700
Houston, Tx. 77040
713.462.3178
TxEng Firm 2726
TxSurv Firm 10110700

CITY OF HOUSTON
HOUSTON PUBLIC WORKS

LIFT STATION RENEWAL
AND REPLACEMENT FY 2023

SCOTT NO.3 LIFT STATION CONDUIT SCHEDULE

WBS NUMBER	FOR CITY OF HOUSTON USE ONLY
R-000267-0179-4	
DRAWING SCALE	
HORIZ: VERT:	
CITY OF HOUSTON PM	
NAWARAJ PANTA, P.E.	
SHEET NO. 133 OF 321	

DWG. NO.
SCT–E–10

IDS JOB No. 0057-085-00

PLOTTED: 12/11/2025 8:34 PM

FILE PATH: O:\H8108_Lift Station Rehabilitation And Reconstruction (IDS)\6 Drawings\Electrical\Working\Scott #3\H8108_SCT–E–10.dwg

PLOTTED: 12/11/2025 8:11 PM

HMI

WET PUMP NO. W1									WET PUMP NO.W2									WET PUMP NO.W3									WET PUMP NO.W4									DRY PUMP NO.D1								
SEAL FAIL ALARM	MOTOR OVERLOAD ALARM	MOTOR CURRENT	HIGH TEMP ALARM	IN HAND	IN AUTO	ON/OFF	START/ STOP		SEAL FAIL ALARM	MOTOR OVERLOAD ALARM	MOTOR CURRENT	HIGH TEMP ALARM	IN HAND	IN AUTO	ON/OFF	START/ STOP		SEAL FAIL ALARM	MOTOR OVERLOAD ALARM	MOTOR CURRENT	HIGH TEMP ALARM	IN HAND	IN AUTO	ON/OFF	START/ STOP		SEAL FAIL ALARM	MOTOR OVERLOAD ALARM	MOTOR CURRENT	HIGH TEMP ALARM	IN HAND	IN AUTO	ON/OFF	START/ STOP		SEAL FAIL ALARM	MOTOR OVERLOAD ALARM	MOTOR CURRENT	HIGH TEMP ALARM	IN HAND	IN AUTO	ON/OFF	START/ STOP	
MA 1	MO 1	II 1	TH 1	HI 1	IA 1	YFS 1	YCS 1		MA 2	MO 2	II 2	TH 2	HI 2	IA 2	YFS 2	YCS 2		MA 3	MO 3	II 3	TH 3	HI 3	IA 3	YFS 3	YCS 3		MA 4	MO 4	II 4	TH 4	HI 4	IA 4	YFS 4	YCS 4		MA D1	MO D1	II D1	TH D1	HI D1	IA D1	YFS D1	YCS D1	

CONTROL PANEL PLC

CONTROL BUILDING

480V

INFLUENT PUMPS MCC

WET PUMP NO. W1 — H/O/A — RUN
WET PUMP NO. W2 — H/O/A — RUN
WET PUMP NO. W3 — H/O/A — RUN
WET PUMP NO. W4 — H/O/A — RUN
DRY PUMP NO. D5 — H/O/A — RUN
DRY PUMP NO. D6 — H/O/A — RUN

PRIMARY PLC
BACKUP PLC
INFLUENT PUMP CONTROL PANEL
ALARMS RESET
OIT

TO SHEET SCT-I-2

SC-I2
SC-I2

LT 1
LE 1
LT 2
LE 2

WET WELL

HIGH-HIGH LEVEL FLOAT SWITCH FS2

HIGH LEVEL FLOAT SWITCH FS1

LSH 4A
TSH 4A
LSH 3A
TSH 3A
LSH 2A
TSH 2A
LSH 1A
TSH 1A
LSH D1
TSH D1
LSH D2
TSH D2

M

XX"-DIP

INFLUENT DISCHARGE

FOR INTERIM REVIEW ONLY NOT INTENDED FOR PERMIT, BIDDING OR CONSTRUCTION PURPOSES.
ENGINEER:
HOSS FOROUZAN
P.E. SERIAL NO.77748
12/15/2025

GAI
Gupta & Associates, Inc.
CONSULTING ENGINEERING
Registration No. F-2593
302 Dennis St.,
Houston, Texas 77006
Tel: 713-636-2936
Fax: 713-636-2987
email: hforouzan@gaiconsulting.com

IDS Engineering Group
13430 NW. Freeway
Suite 700
Houston, Tx. 77040
713.462.3178
TxEng Firm 2726
TxSurv Firm 10110700

CITY OF HOUSTON
HOUSTON PUBLIC WORKS

LIFT STATION RENEWAL AND REPLACEMENT FY 2023

SCOTT NO.3 LIFT STATION P&ID DIAGRAM–I

WBS NUMBER	FOR CITY OF HOUSTON USE ONLY
R-000267-0179-4	
DRAWING SCALE	
HORIZ: VERT:	
CITY OF HOUSTON PM	
NAWARAJ PANTA, P.E.	

DWG. NO. SCT–I–1

SHEET NO. 134 OF 321

NO.	DATE	REVISION	APP.

IDS JOB No. 0057-085-00

FILE PATH: O:\H8108_Lift Station Rehabilitation And Reconstruction (IDS)\6 Drawings\Instrumentation And Control\Working\Scott #3\H8108_SCT–I–01.dwg

PLOTTED: 12/11/2025 8:11 PM

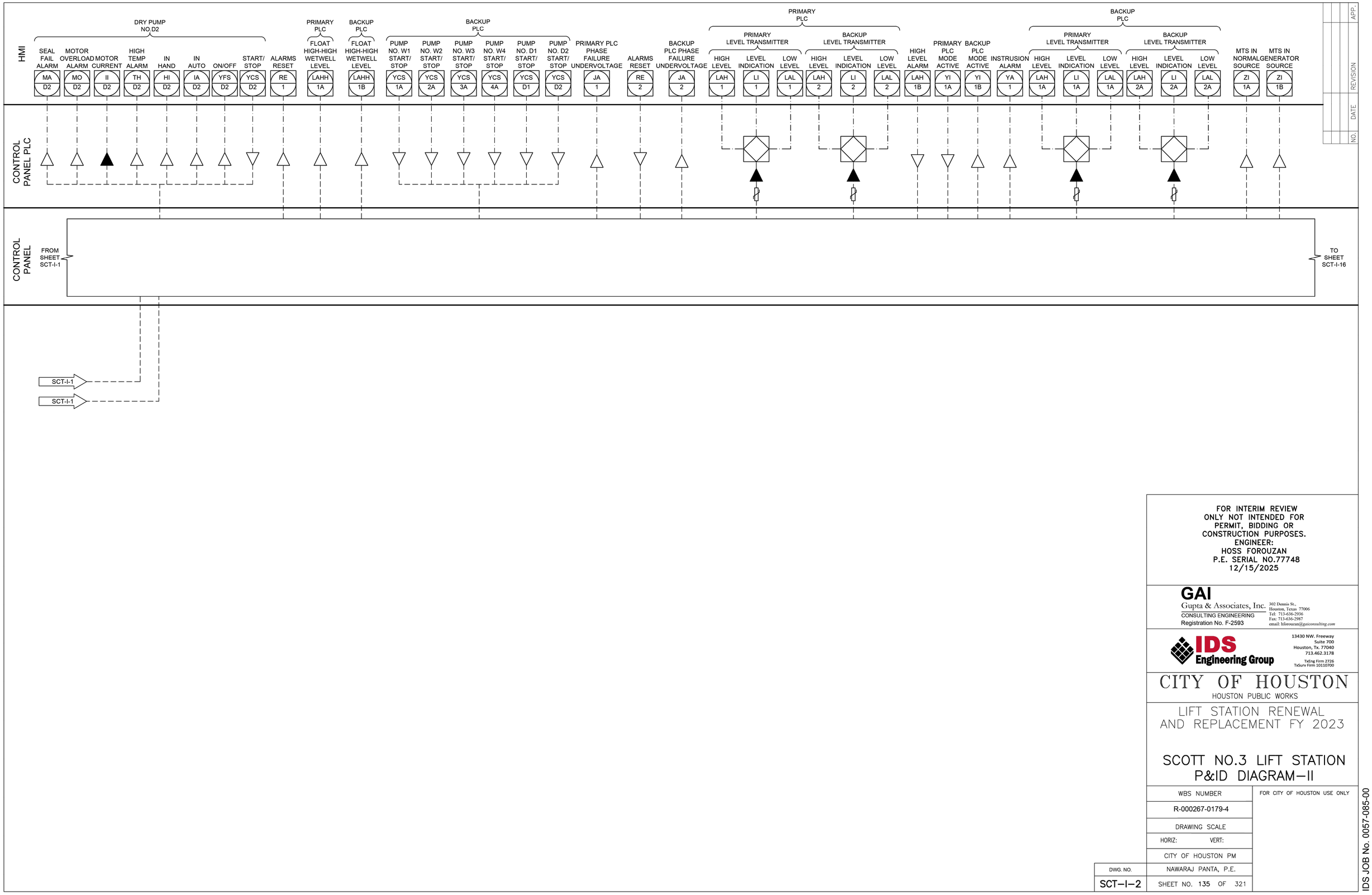

NO.	DATE	REVISION	APP.

FOR INTERIM REVIEW
ONLY NOT INTENDED FOR
PERMIT, BIDDING OR
CONSTRUCTION PURPOSES.
ENGINEER:
HOSS FOROUZAN
P.E. SERIAL NO.77748
12/15/2025

GAI
Gupta & Associates, Inc.
CONSULTING ENGINEERING
Registration No. F-2593
302 Dennis St.,
Houston, Texas 77006
Tel: 713-636-2936
Fax: 713-636-2987
email: hforouzan@gaiconsulting.com

IDS Engineering Group
13430 NW. Freeway
Suite 700
Houston, Tx. 77040
713.462.3178
TxEng Firm 2726
TxSurv Firm 10110700

CITY OF HOUSTON
HOUSTON PUBLIC WORKS

LIFT STATION RENEWAL AND REPLACEMENT FY 2023

SCOTT NO.3 LIFT STATION P&ID DIAGRAM–II

WBS NUMBER	FOR CITY OF HOUSTON USE ONLY
R-000267-0179-4	
DRAWING SCALE	
HORIZ: VERT:	
CITY OF HOUSTON PM	
NAWARAJ PANTA, P.E.	
DWG. NO. SCT–I–2	SHEET NO. 135 OF 321

FILE PATH: O:\H8108_Lift Station Rehabilitation And Reconstruction (IDS)\6 Drawings\Instrumentation And Control\Working\Scott #3\H8108_SCT–I–02.dwg

IDS JOB No. 0057-085-00

PLOTTED: 12/11/2025 8:11 PM

FILE PATH: O:\H8108_Lift Station Rehabilitation And Reconstruction (IDS)\6 Drawings\Instrumentation And Control\Working\Scott #3\H8108_SCT-I-03.dwg

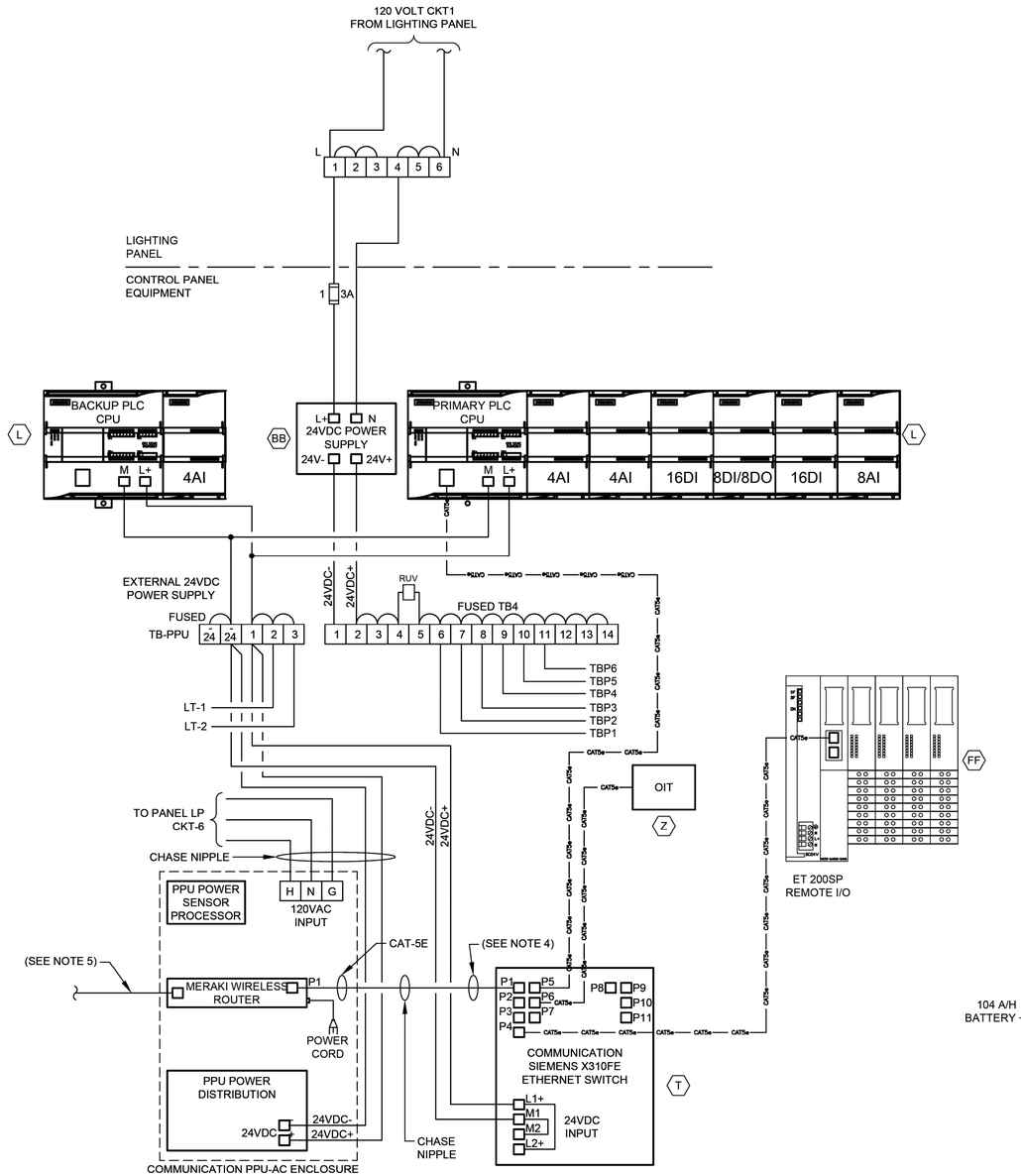

CONTROL POWER & COMMUNICATIONS WIRING

DIAGRAM

NTS

(SEE NOTE 2 & 6)

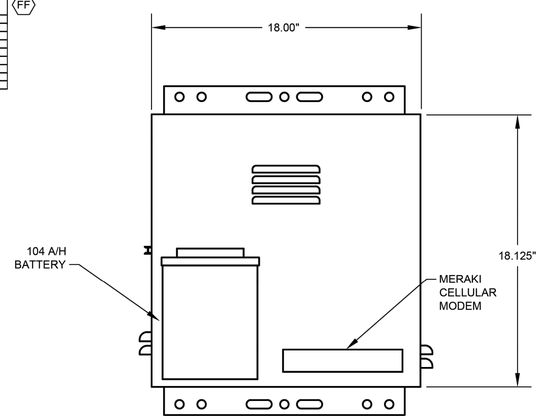

PPU-AC ENCLOSURE FRONT VIEW

PPU-AC ENCLOSURE SIDE VIEW

PPU-AC CONTROL ENCLOSURE

ELEVATION

NTS

(SEE NOTE 7)

NOTES:

1. FOR DESCRIPTION AND RATINGS OF ITEMS INDICATED WITH ITEM TAG, SEE DEVICE RATINGS SCHEDULE.
2. REFER TO SPEC SECTION 16120 FOR CONDUCTOR COLOR CODE.
3. THE PLC POWER SUPPLY SHALL FEED THE 24VDC I/O.
4. ETHERNET CABLE FOR MERAKI CELLULAR ROUTER (P1).
5. POE CABLE TO RADIO.
6. COMMUNICATION PPU-AC & SCADA SHALL BE PROVIDED BY CONTRACTOR INCLUDING TO RUN CONDUITS & WIRES.
7. COORDINATE WITH VENDOR TO PROVIDE PROPER VENTILATION WHERE APPLICABLE.

GENERAL NOTES:

1. NO ELECTRICAL MATERIAL, APPARATUS, DEVICES, APPLIANCES, FIXTURES, OR EQUIPMENT SHALL BE SOLD OR INSTALLED IN THE CITY UNLESS THEY ARE IN CONFORMANCE WITH THE PROVISIONS OF SECTION 508 CITY OF HOUSTON ELECTRICAL CODE, THE LAWS OF THE STATE OF TEXAS AND ANY APPLICABLE RULES AND REGULATIONS ISSUED UNDER THE AUTHORITY OF THE STATE STATUES. THE MAKER'S NAME, TRADEMARK, OR OTHER IDENTIFICATION SYMBOL SHALL BE PLACED ON ALL ELECTRICAL MATERIALS, APPARATUS, DEVICES, APPLIANCES, FIXTURES, AND EQUIPMENT USED OR INSTALLED UNDER THE PROVISIONS OF THIS CODE. ALL ELECTRICAL MATERIALS AND EQUIPMENT SHALL BE LISTED AND LABELED FOR THE INTENDED USE AND SHALL BE INCLUDED IN A LIST PUBLISHED BY AN APPROVAL AGENCY.

NO.	DATE	REVISION	APP.

FOR INTERIM REVIEW ONLY NOT INTENDED FOR PERMIT, BIDDING OR CONSTRUCTION PURPOSES.
ENGINEER:
HOSS FOROUZAN
P.E. SERIAL NO.77748
12/15/2025

GAI
Gupta & Associates, Inc.
CONSULTING ENGINEERING
Registration No. F-2593
302 Dennis St.,
Houston, Texas 77006
Tel: 713-636-2936
Fax: 713-636-2987
email: hforouzan@gaiconsulting.com

IDS Engineering Group
13430 NW. Freeway
Suite 700
Houston, Tx. 77040
713.462.3178
TxEng Firm 2726
TxSurv Firm 10110700

CITY OF HOUSTON
HOUSTON PUBLIC WORKS

LIFT STATION RENEWAL AND REPLACEMENT FY 2023

SCOTT NO.3 LIFT STATION COMMUNICATION DIAGRAM

WBS NUMBER	FOR CITY OF HOUSTON USE ONLY
R-000267-0179-4	
DRAWING SCALE	
HORIZ: VERT:	
CITY OF HOUSTON PM	
NAWARAJ PANTA, P.E.	
SHEET NO. 136 OF 321	

DWG. NO. SCT-I-3

IDS JOB No. 0057-085-00

PLOTTED: 12/11/2025 8:11 PM

EQUIPMENT AND DEVICE SCHEDULE

ITEM	QUANTITY	DESCRIPTION
A	1	SINGLE CHANNEL INTRINSICALLY SAFE RELAY
B	2	ANALOG SIGNAL ISOLATOR
C	6	PUMP PROTECTION MODULE
D	*	NOT USED
E	6	HAND-OFF-AUTO SWITCH, 3 POSITION, HEAVY-DUTY OIL TIGHT WITH 2 SETS OF CONTACT BLOCKS (PUMP CONTROL)
F	6	INDICATING LIGHT, HEAVY DUTY, OILTIGHT, RED, 24 VDC, LED, WITH "RUN" LEGEND
G	*	NOT USED.
H	1	SWITCH FOR CABINET LIGHT, 120V, 20A, SPST
I	2	DUPLEX RECEPTACLE, 120V, 20A, 2 WIRE, GROUNDED, GFCI TYPE
J	1	24" LED STRIP LIGHT 120V SUITABLE FOR ZERO DEGREE OPERATION.
K	*	NAMEPLATES, SEE SPECIFICATIONS (SEE NAMEPLATE SCHEDULE)
L	2	PROGRAMMABLE LOGIC CONTROLLER WITH EXPANSION UNIT
M	*	CONTROL RELAY 24VDC RELAY WITH THREE FORM C CONTACTS AND 11 PIN SOCKET BASE
N	-	NOT USED
O	-	NOT USED
P	1	NEMA 12 GASKETED STEEL ENCLOSURES WITHOUT VENTS 72" H X 20" D X 72" W
Q	*	TERMINAL BLOCK
R	1	WIRE DUCT 2" WIDE X 2" DEEP MINIMUM
S	1	GROUND BUS
T	1	COMMUNICATION ETHERNET SWITCH
U	9	CARTRIDGE
V	1	PUSHBUTTON, BLACK WITH RESET LEGEND
W	-	NOT USED
X	*	FUSED TERMINAL BLOCKS
Y	1	POWER SURGE PROTECTOR - CONTROL POWER
Z	1	PROGRAMMING SCREEN (OIT)
AA	*	120VAC SYSTEM FUSES
BB	1	120VAC - 24VDC POWER SUPPLY, 5A
CC	*	NOT USED
DD	2	INDICATING LIGHT, HEAVY DUTY, OILTIGHT, GREEN, 24VDC, LED WITH "BACKUP PLC" & "PRIMARY PLC" LEGEND
EE	4	ANALOG I/O SURGE SUPPRESSOR
FF	1	REMOTE I/O WITH EXPANSION UNIT

* - AS SCHEDULED

NAMEPLATE SCHEDULE

DESIGNATION	ENGRAVED
N1	PUMP STATION DESIGNATION
N2	WET PUMP NO. W1
N3	WET PUMP NO. W2
N4	WET PUMP NO. W3
N5	WET PUMP NO. W4
N6	DRY PUMP NO. D5
N7	DRY PUMP NO. D6
N8	NOT USED.
N9	NOT USED.
N10	PROGRAMMING SCREEN
N11	NOT USED.
N12	PRIMARY PLC
N13	BACKUP PLC
N14	MOTOR DATA

HORSEPOWER (OUTPUT) ----------
RPM AT FULL LOAD ----------
TIME RATING ----------
FREQUENCY ----------
NUMBER OF PHASES ----------
MODEL NUMBER ----------
RATED VOLTAGE ----------
SERVICE FACTOR ----------
FULL LOAD AMPS ----------
INSULATION CLAS ----------
NEMA DESIGN LETTER ----------
TEMPERATURE RISE ----------
NEMA FRAME SIZE ----------
DATE OF MANUFACTURE ----------
THERMO PROTECTION (IF REQUIRED) --
MOISTURE PROTECTION (IF REQUIRED)-

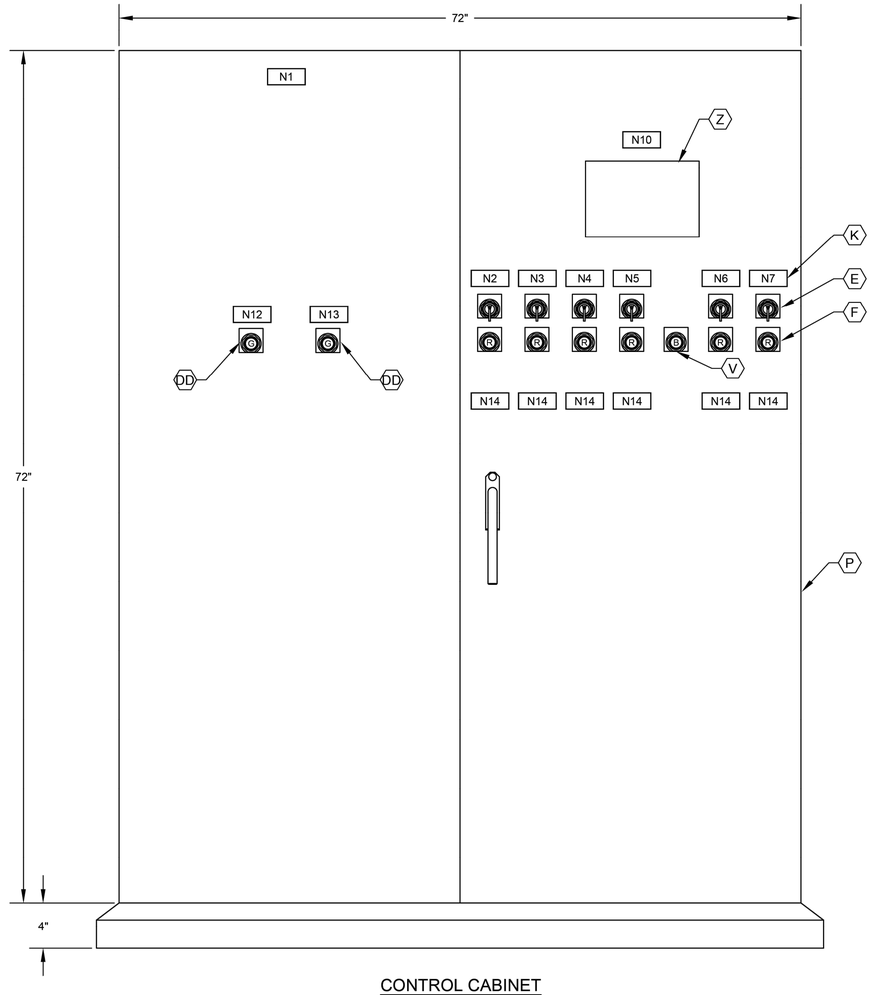

CONTROL CABINET
FRONT DOOR ELEVATION

NOTES:

1. NAMEPLATES SHALL BE MOUNTED TO PANELS USING STAINLESS STEEL HARDWARE.
2. REFER SPECIFICATIONS FOR ALL PANEL COMPONENTS.

GENERAL NOTES:

3. NO ELECTRICAL MATERIAL, APPARATUS, DEVICES, APPLIANCES, FIXTURES, OR EQUIPMENT SHALL BE SOLD OR INSTALLED IN THE CITY UNLESS THEY ARE IN CONFORMANCE WITH THE PROVISIONS OF SECTION 508 CITY OF HOUSTON ELECTRICAL CODE, THE LAWS OF THE STATE OF TEXAS AND ANY APPLICABLE RULES AND REGULATIONS ISSUED UNDER THE AUTHORITY OF THE STATE STATUES. THE MAKER'S NAME, TRADEMARK, OR OTHER IDENTIFICATION SYMBOL SHALL BE PLACED ON ALL ELECTRICAL MATERIALS, APPARATUS, DEVICES, APPLIANCES, FIXTURES, AND EQUIPMENT USED OR INSTALLED UNDER THE PROVISIONS OF THIS CODE. ALL ELECTRICAL MATERIALS AND EQUIPMENT SHALL BE LISTED AND LABELED FOR THE INTENDED USE AND SHALL BE INCLUDED IN A LIST PUBLISHED BY AN APPROVAL AGENCY.

NO.	DATE	REVISION	APP.

FOR INTERIM REVIEW
ONLY NOT INTENDED FOR
PERMIT, BIDDING OR
CONSTRUCTION PURPOSES.
ENGINEER:
HOSS FOROUZAN
P.E. SERIAL NO.77748
12/15/2025

GAI
Gupta & Associates, Inc.
CONSULTING ENGINEERING
Registration No. F-2593
302 Dennis St.,
Houston, Texas 77006
Tel: 713-636-2936
Fax: 713-636-2987
email: hforouzan@gaiconsulting.com

IDS Engineering Group
13430 NW. Freeway
Suite 700
Houston, Tx. 77040
713.462.3178
TxEng Firm 2726
TxSurv Firm 10110700

CITY OF HOUSTON
HOUSTON PUBLIC WORKS

LIFT STATION RENEWAL
AND REPLACEMENT FY 2023

SCOTT NO.3 LIFT STATION CONTROL PANEL EQUIPMENT LAYOUT & SCHEDULE

WBS NUMBER	FOR CITY OF HOUSTON USE ONLY
R-000267-0179-4	
DRAWING SCALE	
HORIZ: VERT:	
CITY OF HOUSTON PM	
NAWARAJ PANTA, P.E.	
DWG. NO. SCT-I-4	SHEET NO. 137 OF 321

IDS JOB No. 0057-085-00

FILE PATH: O:\H8108_Lift Station Rehabilitation And Reconstruction (IDS)\6 Drawings\Instrumentation And Control\Working\Scott #3\H8108_SCT-I-04.dwg

PLOTTED: 12/11/2025 8:11 PM

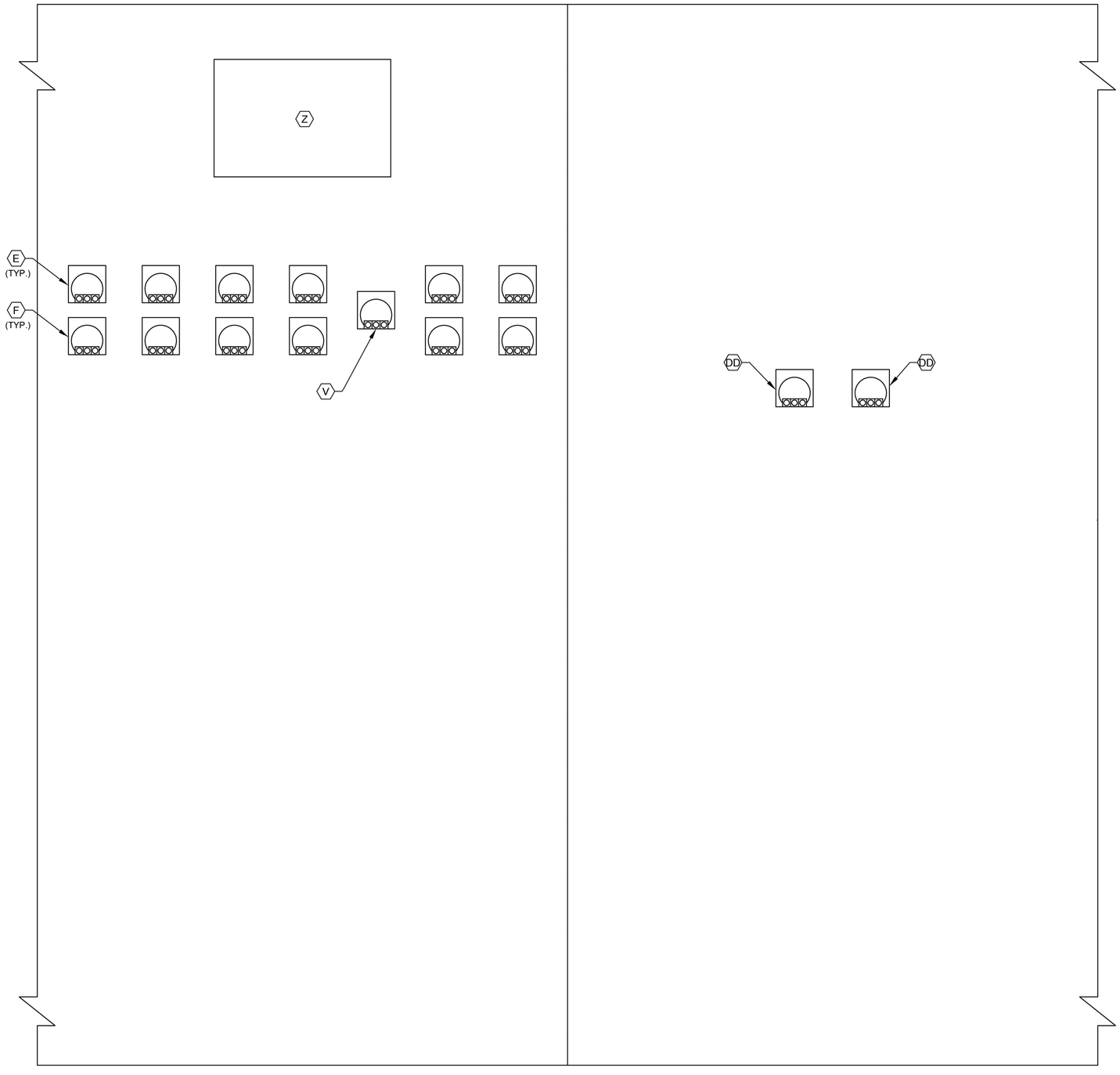

CONTROL CABINET
BACK DOOR ELEVATION

NOTES:

1. SEE SHEET SCT-I-4 FOR EQUIPMENT SCHEDULE.

GENERAL NOTES:

1. NO ELECTRICAL MATERIAL, APPARATUS, DEVICES, APPLIANCES, FIXTURES, OR EQUIPMENT SHALL BE SOLD OR INSTALLED IN THE CITY UNLESS THEY ARE IN CONFORMANCE WITH THE PROVISIONS OF SECTION 508 CITY OF HOUSTON ELECTRICAL CODE, THE LAWS OF THE STATE OF TEXAS AND ANY APPLICABLE RULES AND REGULATIONS ISSUED UNDER THE AUTHORITY OF THE STATE STATUES. THE MAKER'S NAME, TRADEMARK, OR OTHER IDENTIFICATION SYMBOL SHALL BE PLACED ON ALL ELECTRICAL MATERIALS, APPARATUS, DEVICES, APPLIANCES, FIXTURES, AND EQUIPMENT USED OR INSTALLED UNDER THE PROVISIONS OF THIS CODE. ALL ELECTRICAL MATERIALS AND EQUIPMENT SHALL BE LISTED AND LABELED FOR THE INTENDED USE AND SHALL BE INCLUDED IN A LIST PUBLISHED BY AN APPROVAL AGENCY.

NO.	DATE	REVISION	APP.

FOR INTERIM REVIEW
ONLY NOT INTENDED FOR
PERMIT, BIDDING OR
CONSTRUCTION PURPOSES.
ENGINEER:
HOSS FOROUZAN
P.E. SERIAL NO.77748
12/15/2025

GAI
Gupta & Associates, Inc.
CONSULTING ENGINEERING
Registration No. F-2593
302 Dennis St.,
Houston, Texas 77006
Tel: 713-636-2936
Fax: 713-636-2987
email: hforouzan@gaiconsulting.com

IDS Engineering Group
13430 NW. Freeway
Suite 700
Houston, Tx. 77040
713.462.3178
TxEng Firm 2726
TxSurv Firm 10110700

CITY OF HOUSTON
HOUSTON PUBLIC WORKS

LIFT STATION RENEWAL
AND REPLACEMENT FY 2023

SCOTT NO.3 LIFT STATION
CONTROL PANEL
BACK DOOR ELEVATION

WBS NUMBER	FOR CITY OF HOUSTON USE ONLY
R-000267-0179-4	
DRAWING SCALE	
HORIZ: VERT:	
CITY OF HOUSTON PM	
NAWARAJ PANTA, P.E.	
DWG. NO. SCT-I-6	SHEET NO. 138 OF 321

IDS JOB No. 0057-085-00

FILE PATH: O:\H8108_Lift Station Rehabilitation And Reconstruction (IDS)\6 Drawings\Instrumentation And Control\Working\Scott #3\H8108_SCT-I-05.dwg

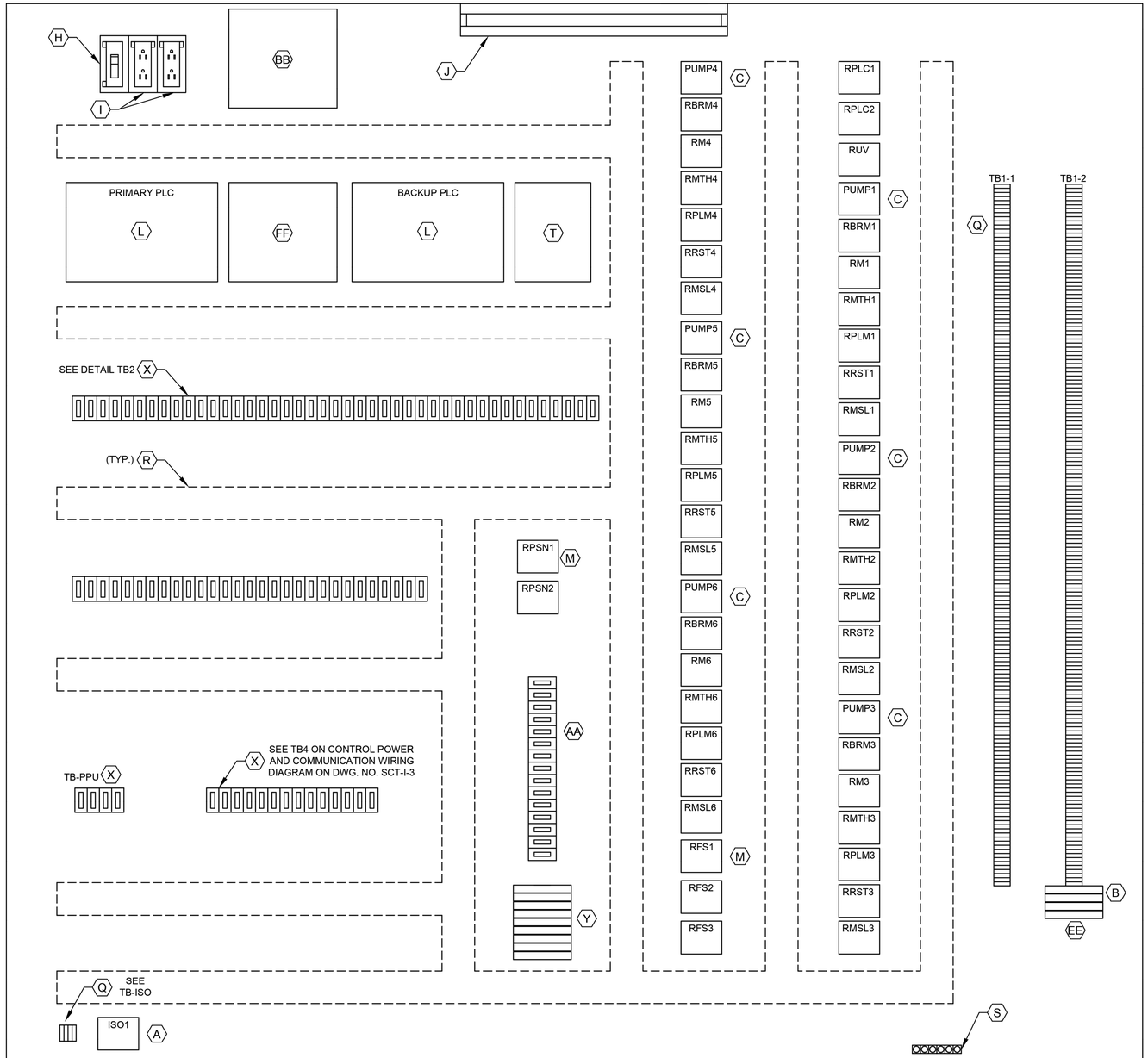

CONTROL PANEL ELEVATION

LEGEND	
TAG	DESCRIPTION
RMTH	MOTOR HIGH TEMPERATURE ALARM RELAY
RPLMP	PLC PUMP RUN RELAY
RRST	PUMP RESET AUX RELAY
RPLC	PLC MODE AUX RELAY
RM	PUMP RUN AUX RELAY
RUV	UNDER VOLTAGE RELAY
RBRM	BACKUP SYSTEM RUN RELAY
ISO	INTRINSICALLY SAFE RELAY
RFS	PUMP RUN FLOAT SWITCH RELAY
RMSL	MOTOR SEAL LEAK ALARM RELAY
RFLP	FLOAT LOCKOUT PUMP RELAY
RPSN	SODIUM NITRATE PUMP RELAY

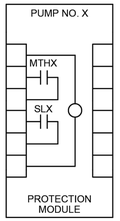

PUMP PROTECTION MODULE DETAIL, ITEM C

NOTE: REPLACE "X" WITH APPROPRIATE PUMP NO.

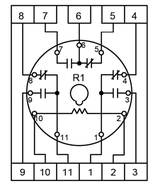

RELAY DETAIL ITEM M

DETAIL TB-ISO
1500
1501
1503
1504

DETAIL TB1-1
L1A
L1N
SPARE
3
3N
SPARE
49
50
51
52
53
54
1004
1
24V-
24V-
SPARE
1002
2
11
1001
1001A
12
1003
1003A
34
3N
SPARE
SPARE
102
103
3P1
109
110
112
116
117
120
121
122
123
124
125
126
127
SPARE
SPARE
202
203
3P2
209
210
212
216
217
220
221
222
223
224
225
226
227

DETAIL TB1-2
SPARE
SPARE
302
303
3P3
309
310
312
316
317
320
321
322
323
324
325
326
327
SPARE
SPARE
402
403
3P4
409
410
412
416
417
420
421
422
423
424
425
426
427
SPARE
SPARE

DETAIL TB1-2
502
503
3P5
509
510
512
516
517
520
521
522
523
524
525
526
527
SPARE
SPARE
602
603
3P6
609
610
612
616
617
620
621
622
623
624
625
626
627

DETAIL TB2
36A
37A
50
52
54
52A
52A
54A
L+
M
35B
38B
41B
44B
SPARE
SPARE
47B
50B
53B
13B
13AB
B
L+
M
14B
14AB
14GB
119
SPARE
L+
M
13
13A
13G
14
14A
14G
1M
2M
1L
3
30
32
34
37
38
41
33B
45
18B
SPARE

DETAIL TB2
100
112
113
114
115
117
118
119
120
121
SPARE
200
212
213
214
215
217
218
219
220
221
SPARE
300
312
313
314
315
317
318
319
320
321
SPARE
400
412
413
414
415
417
418
419
420
421
SPARE

DETAIL TB2
500
512
513
514
515
517
518
519
520
521
SPARE
600
612
613
614
615
617
618
619
620
621
SPARE

NOTES:

1. SEE SHEET SCT-I-4 FOR EQUIPMENT SCHEDULE.

GENERAL NOTES:

1. NO ELECTRICAL MATERIAL, APPARATUS, DEVICES, APPLIANCES, FIXTURES, OR EQUIPMENT SHALL BE SOLD OR INSTALLED IN THE CITY UNLESS THEY ARE IN CONFORMANCE WITH THE PROVISIONS OF SECTION 508 CITY OF HOUSTON ELECTRICAL CODE, THE LAWS OF THE STATE OF TEXAS AND ANY APPLICABLE RULES AND REGULATIONS ISSUED UNDER THE AUTHORITY OF THE STATE STATUES. THE MAKER'S NAME, TRADEMARK, OR OTHER IDENTIFICATION SYMBOL SHALL BE PLACED ON ALL ELECTRICAL MATERIALS, APPARATUS, DEVICES, APPLIANCES, FIXTURES, AND EQUIPMENT USED OR INSTALLED UNDER THE PROVISIONS OF THIS CODE. ALL ELECTRICAL MATERIALS AND EQUIPMENT SHALL BE LISTED AND LABELED FOR THE INTENDED USE AND SHALL BE INCLUDED IN A LIST PUBLISHED BY AN APPROVAL AGENCY.

FOR INTERIM REVIEW
ONLY NOT INTENDED FOR
PERMIT, BIDDING OR
CONSTRUCTION PURPOSES.
ENGINEER:
HOSS FOROUZAN
P.E. SERIAL NO.77748
12/15/2025

GAI
Gupta & Associates, Inc.
CONSULTING ENGINEERING
Registration No. F-2593
302 Dennis St.,
Houston, Texas 77006
Tel: 713-636-2916
Fax: 713-636-2987
email: hforouzan@gaiconsulting.com

IDS Engineering Group
13430 NW. Freeway
Suite 700
Houston, Tx. 77040
713.462.3178
TxEng Firm 2726
TxSurv Firm 10110700

CITY OF HOUSTON
HOUSTON PUBLIC WORKS

LIFT STATION RENEWAL AND REPLACEMENT FY 2023

SCOTT NO.3 LIFT STATION CONTROL PANEL EQUIPMENT LAYOUT

WBS NUMBER	FOR CITY OF HOUSTON USE ONLY
R-000267-0179-4	
DRAWING SCALE	
HORIZ: VERT:	
CITY OF HOUSTON PM	
NAWARAJ PANTA, P.E.	
DWG. NO. SCT–I–6	
SHEET NO. 139 OF 321	

NO.	DATE	REVISION	APP.

PLOTTED: 12/11/2025 8:11 PM

FILE PATH: O:\H8108_Lift Station Rehabilitation And Reconstruction (IDS)\6 Drawings\Instrumentation And Control\Working\Scott #3\H8108_SCT-I-06.dwg

IDS JOB No. 0057-085-00

PLOTTED: 12/11/2025 8:11 PM

FILE PATH: O:\H8108_Lift Station Rehabilitation And Reconstruction (IDS)\6 Drawings\Instrumentation And Control\Working\Scott #3\H8108_SCT-I-07.dwg

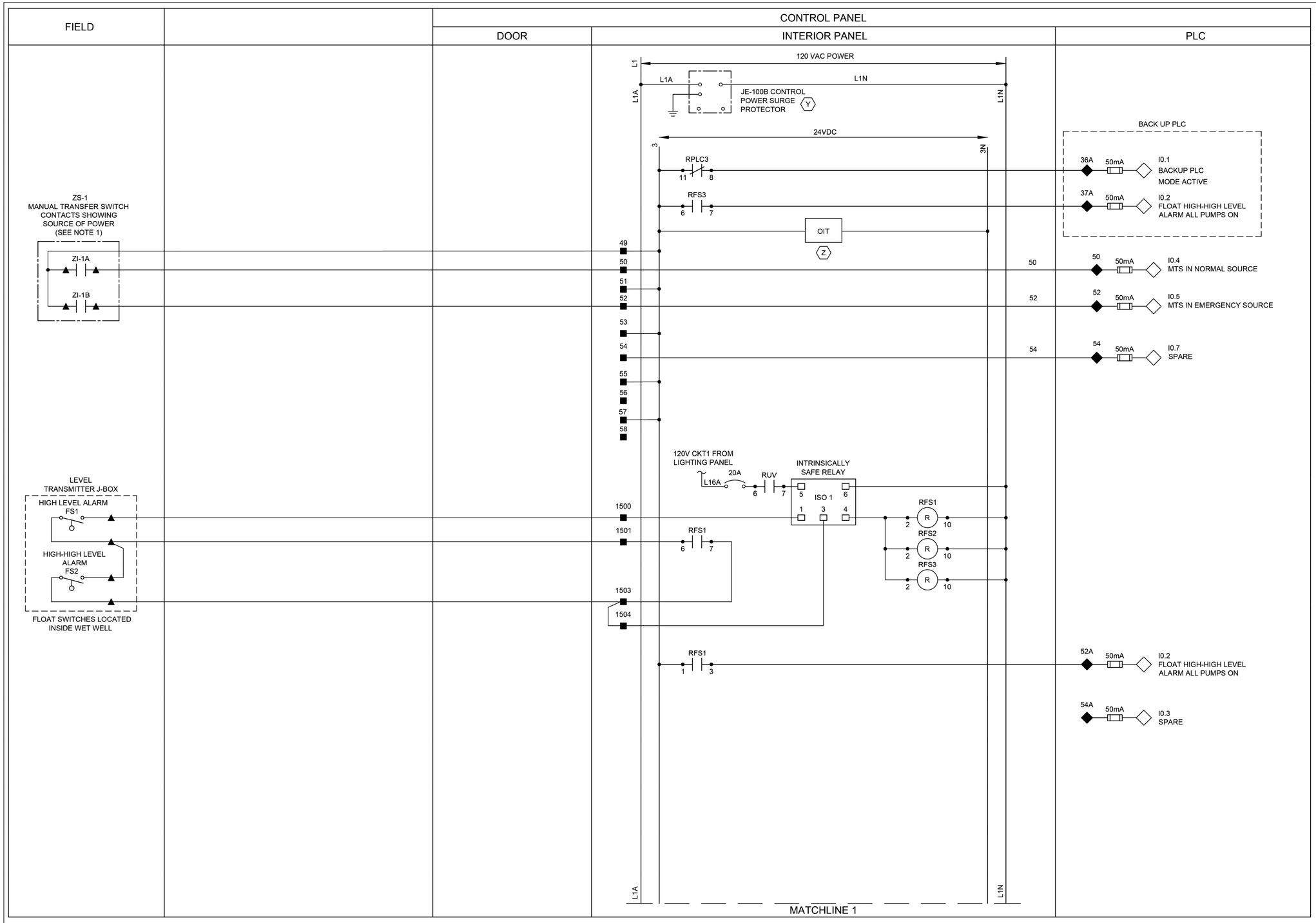

LEGEND

- △ DEVICE OR FIELD TERMINAL LOCATED AT MOTOR
- ✳ DEVICE OR FIELD TERMINAL LOCATED REMOTE
- □ DEVICE OR FIELD TERMINAL LOCATED AT MCC/POWER PANEL
- ■ FIELD TERMINAL LOCATED AT CONTROL PANEL
- ▲ REMOTE TERMINAL
- ● DEVICE TERMINAL NO.
- ◆ PLC INTERFACE TERMINAL

NOTES:

1. PROVIDE MANUAL TRANSFER SWITCH AND GENERATOR DRY CONTACT.
2. ALL FLOAT CONTROL CIRCUIT WIRES COLOR SHALL BE YELLOW.

GENERAL NOTES:

1. NO ELECTRICAL MATERIAL, APPARATUS, DEVICES, APPLIANCES, FIXTURES, OR EQUIPMENT SHALL BE SOLD OR INSTALLED IN THE CITY UNLESS THEY ARE IN CONFORMANCE WITH THE PROVISIONS OF SECTION 508 CITY OF HOUSTON ELECTRICAL CODE, THE LAWS OF THE STATE OF TEXAS AND ANY APPLICABLE RULES AND REGULATIONS ISSUED UNDER THE AUTHORITY OF THE STATE STATUES. THE MAKER'S NAME, TRADEMARK, OR OTHER IDENTIFICATION SYMBOL SHALL BE PLACED ON ALL ELECTRICAL MATERIALS, APPARATUS, DEVICES, APPLIANCES, FIXTURES, AND EQUIPMENT USED OR INSTALLED UNDER THE PROVISIONS OF THIS CODE. ALL ELECTRICAL MATERIALS AND EQUIPMENT SHALL BE LISTED AND LABELED FOR THE INTENDED USE AND SHALL BE INCLUDED IN A LIST PUBLISHED BY AN APPROVAL AGENCY.

NO.	DATE	REVISION	APP.

FOR INTERIM REVIEW
ONLY NOT INTENDED FOR
PERMIT, BIDDING OR
CONSTRUCTION PURPOSES.
ENGINEER:
HOSS FOROUZAN
P.E. SERIAL NO.77748
12/15/2025

GAI
Gupta & Associates, Inc.
CONSULTING ENGINEERING
Registration No. F-2593
302 Dennis St.,
Houston, Texas 77006
Tel: 713-636-2936
Fax: 713-636-2987
email: hforouzan@gaiconsulting.com

IDS Engineering Group
13430 NW. Freeway
Suite 700
Houston, Tx. 77040
713.462.3178
TxEng Firm 2726
TxSurv Firm 10110700

CITY OF HOUSTON
HOUSTON PUBLIC WORKS

LIFT STATION RENEWAL
AND REPLACEMENT FY 2023

SCOTT NO.3 LIFT STATION
CONTROL PANEL
CONTROL WIRING DIAGRAM-I

WBS NUMBER	FOR CITY OF HOUSTON USE ONLY
R-000267-0179-4	
DRAWING SCALE	
HORIZ: VERT:	
CITY OF HOUSTON PM	
NAWARAJ PANTA, P.E.	

DWG. NO.	SHEET NO. 140 OF 321
SCT-I-7	

IDS JOB No. 0057-085-00

PLOTTED: 12/11/2025 8:11 PM
FILE PATH: O:\H8108_Lift Station Rehabilitation And Reconstruction (IDS)\6 Drawings\Instrumentation And Control\Working\Scott #3\H8108_SCT-I-08.dwg

FIELD	MOTOR CONTROL CENTER (INDOOR)	CONTROL PANEL	
		DOOR	INTERIOR PANEL / PLC

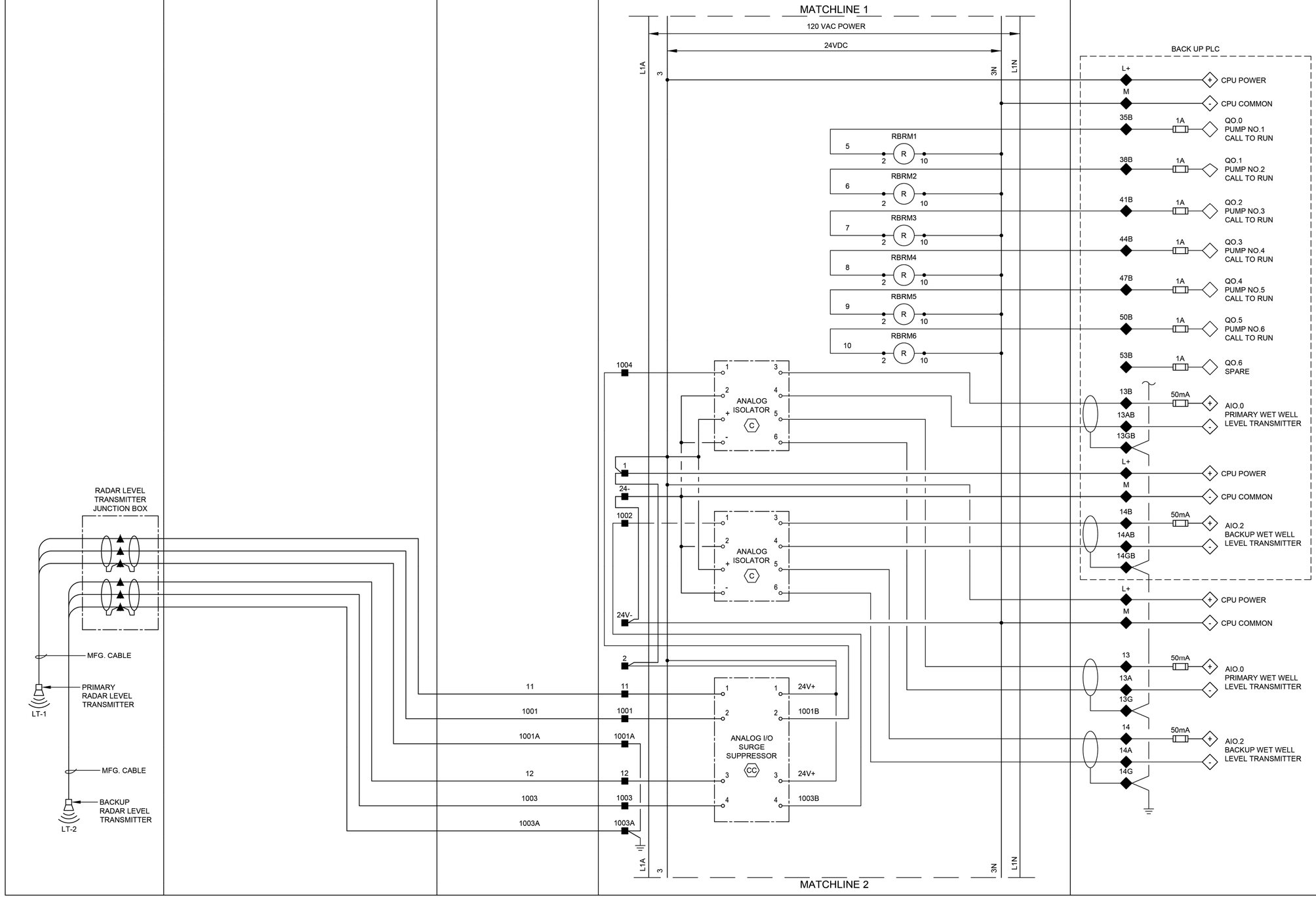

LEGEND

- △ DEVICE OR FIELD TERMINAL LOCATED AT MOTOR
- ✳ DEVICE OR FIELD TERMINAL LOCATED REMOTE
- □ DEVICE OR FIELD TERMINAL LOCATED AT MCC/POWER PANEL
- ■ FIELD TERMINAL LOCATED AT CONTROL PANEL
- ▲ REMOTE TERMINAL
- ● DEVICE TERMINAL NO.
- ◆ PLC INTERFACE TERMINAL

GENERAL NOTES:

1. NO ELECTRICAL MATERIAL, APPARATUS, DEVICES, APPLIANCES, FIXTURES, OR EQUIPMENT SHALL BE SOLD OR INSTALLED IN THE CITY UNLESS THEY ARE IN CONFORMANCE WITH THE PROVISIONS OF SECTION 508 CITY OF HOUSTON ELECTRICAL CODE, THE LAWS OF THE STATE OF TEXAS AND ANY APPLICABLE RULES AND REGULATIONS ISSUED UNDER THE AUTHORITY OF THE STATE STATUES. THE MAKER'S NAME, TRADEMARK, OR OTHER IDENTIFICATION SYMBOL SHALL BE PLACED ON ALL ELECTRICAL MATERIALS, APPARATUS, DEVICES, APPLIANCES, FIXTURES, AND EQUIPMENT USED OR INSTALLED UNDER THE PROVISIONS OF THIS CODE. ALL ELECTRICAL MATERIALS AND EQUIPMENT SHALL BE LISTED AND LABELED FOR THE INTENDED USE AND SHALL BE INCLUDED IN A LIST PUBLISHED BY AN APPROVAL AGENCY.

NO.	DATE	REVISION	APP.

FOR INTERIM REVIEW
ONLY NOT INTENDED FOR
PERMIT, BIDDING OR
CONSTRUCTION PURPOSES.
ENGINEER:
HOSS FOROUZAN
P.E. SERIAL NO.77748
12/15/2025

GAI
Gupta & Associates, Inc.
CONSULTING ENGINEERING
Registration No. F-2593
302 Dennis St.,
Houston, Texas 77006
Tel: 713-636-2936
Fax: 713-636-2987
email: hforouzan@gaiconsulting.com

IDS Engineering Group
13430 NW. Freeway
Suite 700
Houston, Tx. 77040
713.462.3178
TxEng Firm 2726
TxSurv Firm 10110700

CITY OF HOUSTON
HOUSTON PUBLIC WORKS

LIFT STATION RENEWAL
AND REPLACEMENT FY 2023

SCOTT NO.3 LIFT STATION CONTROL PANEL CONTROL WIRING DIAGRAM—II

WBS NUMBER	FOR CITY OF HOUSTON USE ONLY
R-000267-0179-4	
DRAWING SCALE	
HORIZ: VERT:	
CITY OF HOUSTON PM	
NAWARAJ PANTA, P.E.	

DWG. NO.	SHEET NO.
SCT—I—8	SHEET NO. 141 OF 321

IDS JOB No. 0057-085-00

PLOTTED: 12/11/2025 8:11 PM

FILE PATH: O:\H8108_Lift Station Rehabilitation And Reconstruction (IDS)\6 Drawings\Instrumentation And Control\Working\Scott #3\H8108_SCT-I-09.dwg

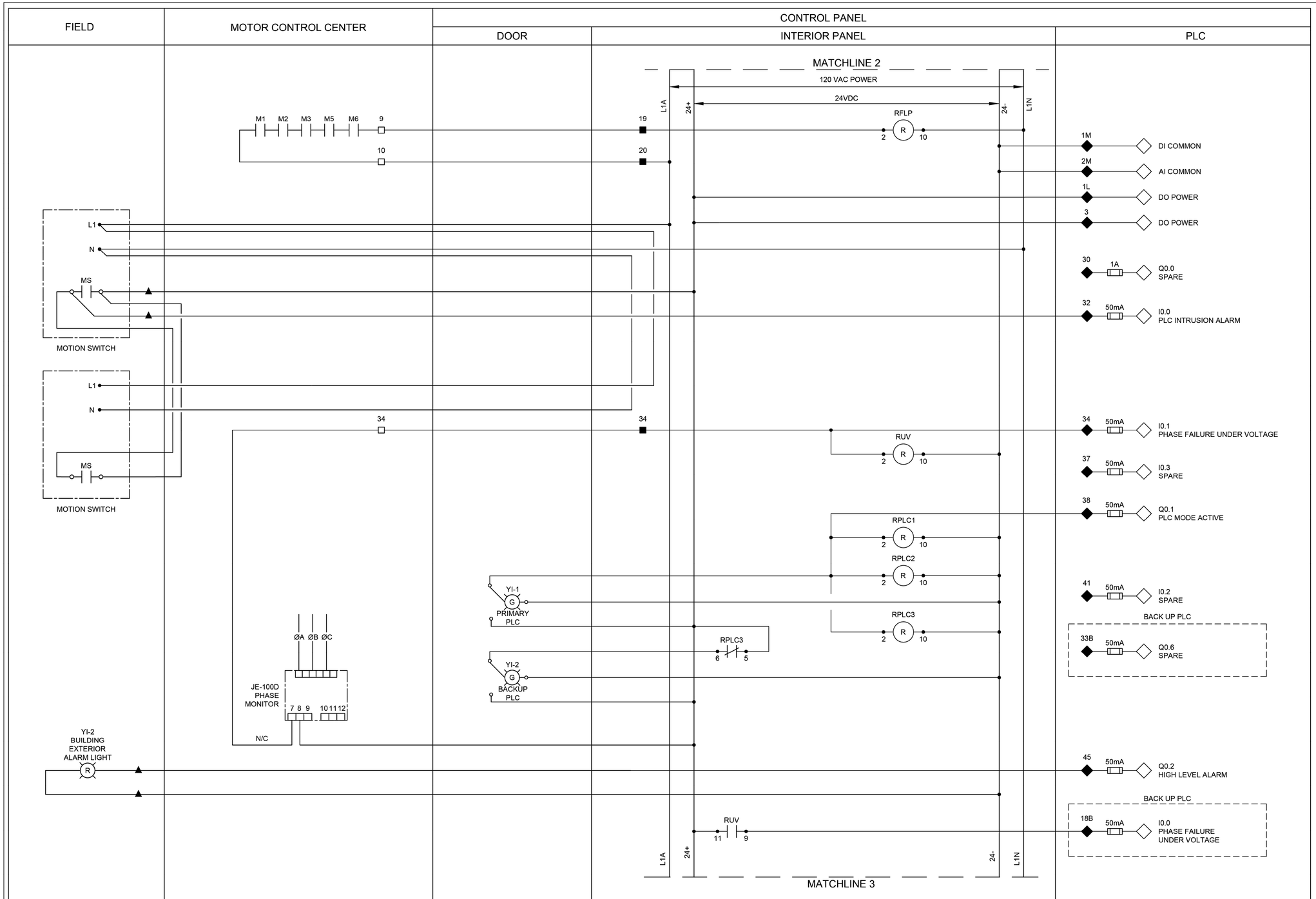

LEGEND

- △ DEVICE OR FIELD TERMINAL LOCATED AT MOTOR
- ✳ DEVICE OR FIELD TERMINAL LOCATED REMOTE
- □ DEVICE OR FIELD TERMINAL LOCATED AT MCC/POWER PANEL
- ■ FIELD TERMINAL LOCATED AT CONTROL PANEL
- ▲ REMOTE TERMINAL
- ● DEVICE TERMINAL NO.
- ◆ PLC INTERFACE TERMINAL

NO.	DATE	REVISION	APP.

GENERAL NOTES:

1. NO ELECTRICAL MATERIAL, APPARATUS, DEVICES, APPLIANCES, FIXTURES, OR EQUIPMENT SHALL BE SOLD OR INSTALLED IN THE CITY UNLESS THEY ARE IN CONFORMANCE WITH THE PROVISIONS OF SECTION 508 CITY OF HOUSTON ELECTRICAL CODE, THE LAWS OF THE STATE OF TEXAS AND ANY APPLICABLE RULES AND REGULATIONS ISSUED UNDER THE AUTHORITY OF THE STATE STATUES. THE MAKER'S NAME, TRADEMARK, OR OTHER IDENTIFICATION SYMBOL SHALL BE PLACED ON ALL ELECTRICAL MATERIALS, APPARATUS, DEVICES, APPLIANCES, FIXTURES, AND EQUIPMENT USED OR INSTALLED UNDER THE PROVISIONS OF THIS CODE. ALL ELECTRICAL MATERIALS AND EQUIPMENT SHALL BE LISTED AND LABELED FOR THE INTENDED USE AND SHALL BE INCLUDED IN A LIST PUBLISHED BY AN APPROVAL AGENCY.

FOR INTERIM REVIEW
ONLY NOT INTENDED FOR
PERMIT, BIDDING OR
CONSTRUCTION PURPOSES.
ENGINEER:
HOSS FOROUZAN
P.E. SERIAL NO.77748
12/15/2025

GAI
Gupta & Associates, Inc.
CONSULTING ENGINEERING
Registration No. F-2593
302 Dennis St.,
Houston, Texas 77006
Tel: 713-636-2936
Fax: 713-636-2987
email: hforouzan@gaiconsulting.com

IDS Engineering Group
13430 NW. Freeway
Suite 700
Houston, Tx. 77040
713.462.3178
TxEng Firm 2726
TxSurv Firm 10110700

CITY OF HOUSTON
HOUSTON PUBLIC WORKS

LIFT STATION RENEWAL AND REPLACEMENT FY 2023

SCOTT NO.3 LIFT STATION CONTROL PANEL CONTROL WIRING DIAGRAM—III

WBS NUMBER	FOR CITY OF HOUSTON USE ONLY
R-000267-0179-4	
DRAWING SCALE	
HORIZ: VERT:	
CITY OF HOUSTON PM	
NAWARAJ PANTA, P.E.	
SHEET NO. 142 OF 321	

DWG. NO. SCT—I—9

IDS JOB No. 0057-085-00

PLOTTED: 12/11/2025 8:11 PM

FILE PATH: O:\H8108_Lift Station Rehabilitation And Reconstruction (IDS)\6 Drawings\Instrumentation And Control\Working\Scott #3\H8108_SCT-I-10.dwg

FIELD | MOTOR CONTROL CENTER | CONTROL PANEL (DOOR | INTERIOR PANEL | PLC)

DRY PUMP NO.D5
M
T1 T2 T3 G
A B C
T1 T2 T3
Aϕ Bϕ Cϕ
M1
MCP
MCC CKT 7
4-20mA CURRENT TRANSDUCER
CT
1A 1A
CPT - 480-120VAC 1PH, 250VA MIN
X1-5 3A X2-5
TDLP5F TDLP5
TD
M5
ZS-5 MOR5
IE-D5
MOTOR OVERLOAD RELAY (MOR) (SEE NOTE 1)
A B C
MOR5
LSH-D5 SEAL LEAK DETECTOR
TSH-D5 MOTOR TEMP SWITCH
TERMINAL JUNCTION BOX
0.5A 3A
CPT - 120-24VAC 1PH, 50VA
LAH-5 SL5
TAH-5 MTH5
RESET
PUMP PROTECTION MODULE

24 VDC POWER
24+ 24-
TBP5 SEE NOTE 2
3P5 3N5
HS-D5 H-O-A
YI-5
HS-1A RESET
TO SHEET SCT-I-11
TO 619 ON SHEET SCT-I-11
RMTH5 RMSL5 RPLMP5 RM5 RRST5 RPLC2 RBRM5 RFS3 RRSS5

512	50mA	AI1.6 DRY PUMP NO.D5 MOTOR CURRENT
500	1A	Q2.1 DRY PUMP NO.D5 CALL TO RUN
514	50mA	I5.1 DRY PUMP NO.D5 IN HAND
515	50mA	I5.0 DRY PUMP NO.D5 IN AUTO
521	50mA	I5.2 DRY PUMP NO.D5 SEAL FAILURE ALARM
513	50mA	I2.2 DRY PUMP NO.D5 ON/OFF
517	50mA	I5.3 DRY PUMP NO.D5 MOTOR OVERLOAD ALARM
520	50mA	I2.3 DRY PUMP NO.D5 HIGH TEMPERATURE ALARM

LEGEND
- △ DEVICE OR FIELD TERMINAL LOCATED AT MOTOR
- ✳ DEVICE OR FIELD TERMINAL LOCATED REMOTE
- □ DEVICE OR FIELD TERMINAL LOCATED AT MCC/POWER PANEL
- ■ FIELD TERMINAL LOCATED AT CONTROL PANEL
- ▲ REMOTE TERMINAL
- ● DEVICE TERMINAL NO.
- ◆ PLC INTERFACE TERMINAL

NOTES:
1. MOTOR OVERLOAD RELAY OUTPUT CONTACT SHOWN NORMALLY CLOSED WHEN RELAY IS DE-ENERGIZED, OPEN WHEN ENERGIZED, AND CLOSED WHEN IN ALARM. VERIFY OPERATION OF RELAY PROVIDED AND ADJUST CONNECTION OF RMOR AUXILIARY RELAYS.
2. FUSED TERMINAL ON TERMINAL BLOCK TB4 SEE CONTROL POWER AND COMMUNICATION WIRING DIAGRAM DRAWING NO. SCT-I-3.
3. ALL FLOAT CONTROL CIRCUIT WIRES COLOR SHALL BE YELLOW.

GENERAL NOTES:
1. NO ELECTRICAL MATERIAL, APPARATUS, DEVICES, APPLIANCES, FIXTURES, OR EQUIPMENT SHALL BE SOLD OR INSTALLED IN THE CITY UNLESS THEY ARE IN CONFORMANCE WITH THE PROVISIONS OF SECTION 508 CITY OF HOUSTON ELECTRICAL CODE, THE LAWS OF THE STATE OF TEXAS AND ANY APPLICABLE RULES AND REGULATIONS ISSUED UNDER THE AUTHORITY OF THE STATE STATUES. THE MAKER'S NAME, TRADEMARK, OR OTHER IDENTIFICATION SYMBOL SHALL BE PLACED ON ALL ELECTRICAL MATERIALS, APPARATUS, DEVICES, APPLIANCES, FIXTURES, AND EQUIPMENT USED OR INSTALLED UNDER THE PROVISIONS OF THIS CODE. ALL ELECTRICAL MATERIALS AND EQUIPMENT SHALL BE LISTED AND LABELED FOR THE INTENDED USE AND SHALL BE INCLUDED IN A LIST PUBLISHED BY AN APPROVAL AGENCY.

NO.	DATE	REVISION	APP.

FOR INTERIM REVIEW
ONLY NOT INTENDED FOR
PERMIT, BIDDING OR
CONSTRUCTION PURPOSES.
ENGINEER:
HOSS FOROUZAN
P.E. SERIAL NO.77748
12/15/2025

GAI
Gupta & Associates, Inc.
CONSULTING ENGINEERING
Registration No. F-2593
302 Dennis St.,
Houston, Texas 77006
Tel: 713-636-2936
Fax: 713-636-2987
email: hforouzan@gaiconsulting.com

IDS Engineering Group
13430 NW. Freeway
Suite 700
Houston, Tx. 77040
713.462.3178
TxEng Firm 2726
TxSurv Firm 10110700

CITY OF HOUSTON
HOUSTON PUBLIC WORKS

LIFT STATION RENEWAL AND REPLACEMENT FY 2023

SCOTT NO.3 LIFT STATION PUMP NO.D5 CONTROL WIRING DIAGRAM

WBS NUMBER	FOR CITY OF HOUSTON USE ONLY
R-000267-0179-4	
DRAWING SCALE	
HORIZ: VERT:	
CITY OF HOUSTON PM	
NAWARAJ PANTA, P.E.	
DWG. NO. SCT-I-10	SHEET NO. 143 OF 321

IDS JOB No. 0057-085-00

PLOTTED: 12/11/2025 8:11 PM

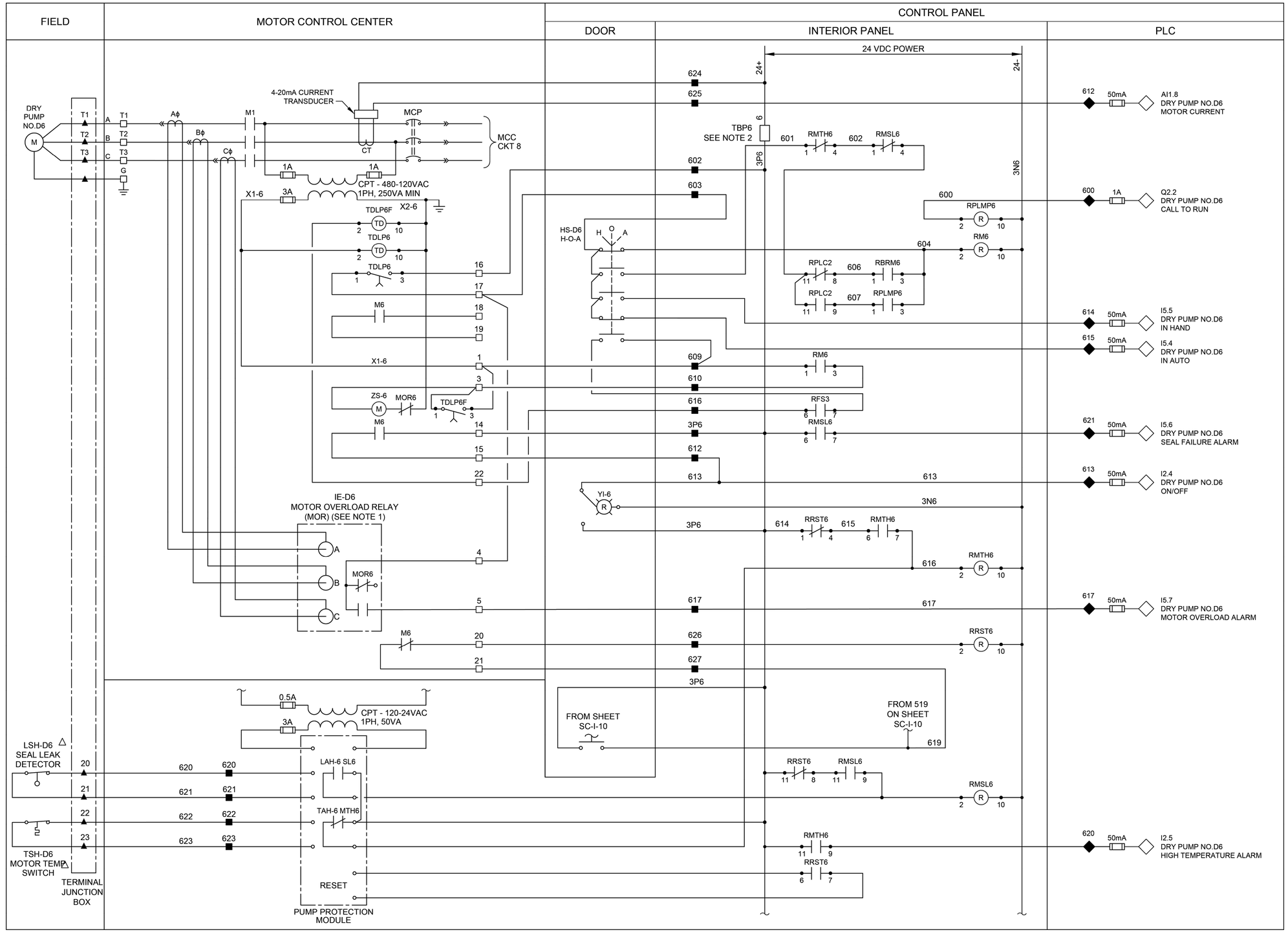

LEGEND

- △ DEVICE OR FIELD TERMINAL LOCATED AT MOTOR
- ✳ DEVICE OR FIELD TERMINAL LOCATED REMOTE
- □ DEVICE OR FIELD TERMINAL LOCATED AT MCC/POWER PANEL
- ■ FIELD TERMINAL LOCATED AT CONTROL PANEL
- ▲ REMOTE TERMINAL
- ● DEVICE TERMINAL NO.
- ◆ PLC INTERFACE TERMINAL

NOTES:

1. MOTOR OVERLOAD RELAY OUTPUT CONTACT SHOWN NORMALLY CLOSED WHEN RELAY IS DE-ENERGIZED, OPEN WHEN ENERGIZED, AND CLOSED WHEN IN ALARM. VERIFY OPERATION OF RELAY PROVIDED AND ADJUST CONNECTION OF RMOR AUXILIARY RELAYS.
2. FUSED TERMINAL ON TERMINAL BLOCK TB4 SEE CONTROL POWER AND COMMUNICATION WIRING DIAGRAM DRAWING NO. SCT-I-3.
3. ALL FLOAT CONTROL CIRCUIT WIRES COLOR SHALL BE YELLOW.

GENERAL NOTES:

1. NO ELECTRICAL MATERIAL, APPARATUS, DEVICES, APPLIANCES, FIXTURES, OR EQUIPMENT SHALL BE SOLD OR INSTALLED IN THE CITY UNLESS THEY ARE IN CONFORMANCE WITH THE PROVISIONS OF SECTION 508 CITY OF HOUSTON ELECTRICAL CODE, THE LAWS OF THE STATE OF TEXAS AND ANY APPLICABLE RULES AND REGULATIONS ISSUED UNDER THE AUTHORITY OF THE STATE STATUES. THE MAKER'S NAME, TRADEMARK, OR OTHER IDENTIFICATION SYMBOL SHALL BE PLACED ON ALL ELECTRICAL MATERIALS, APPARATUS, DEVICES, APPLIANCES, FIXTURES, AND EQUIPMENT USED OR INSTALLED UNDER THE PROVISIONS OF THIS CODE. ALL ELECTRICAL MATERIALS AND EQUIPMENT SHALL BE LISTED AND LABELED FOR THE INTENDED USE AND SHALL BE INCLUDED IN A LIST PUBLISHED BY AN APPROVAL AGENCY.

NO.	DATE	REVISION	APP.

FOR INTERIM REVIEW ONLY NOT INTENDED FOR PERMIT, BIDDING OR CONSTRUCTION PURPOSES.
ENGINEER:
HOSS FOROUZAN
P.E. SERIAL NO.77748
12/15/2025

GAI
Gupta & Associates, Inc.
CONSULTING ENGINEERING
Registration No. F-2593
302 Dennis St.,
Houston, Texas 77006
Tel: 713-636-2936
Fax: 713-636-2987
email: hforouzan@gaiconsulting.com

IDS Engineering Group
13430 NW. Freeway
Suite 700
Houston, Tx. 77040
713.462.3178
TxEng Firm 2726
TxSurv Firm 10110700

CITY OF HOUSTON
HOUSTON PUBLIC WORKS

LIFT STATION RENEWAL AND REPLACEMENT FY 2023

SCOTT NO.3 LIFT STATION PUMP NO. D6 CONTROL WRING DIAGRAM

WBS NUMBER	FOR CITY OF HOUSTON USE ONLY
R-000267-0179-4	
DRAWING SCALE	
HORIZ: VERT:	
CITY OF HOUSTON PM	
NAWARAJ PANTA, P.E.	

DWG. NO.	SHEET NO. 144 OF 321
SCT–I–11	

IDS JOB No. 0057-085-00

FILE PATH: O:\H8108_Lift Station Rehabilitation And Reconstruction (IDS)\6 Drawings\Instrumentation And Control\Working\Scott #3\H8108_SCT-I-11.dwg

PLOTTED: 12/11/2025 8:11 PM

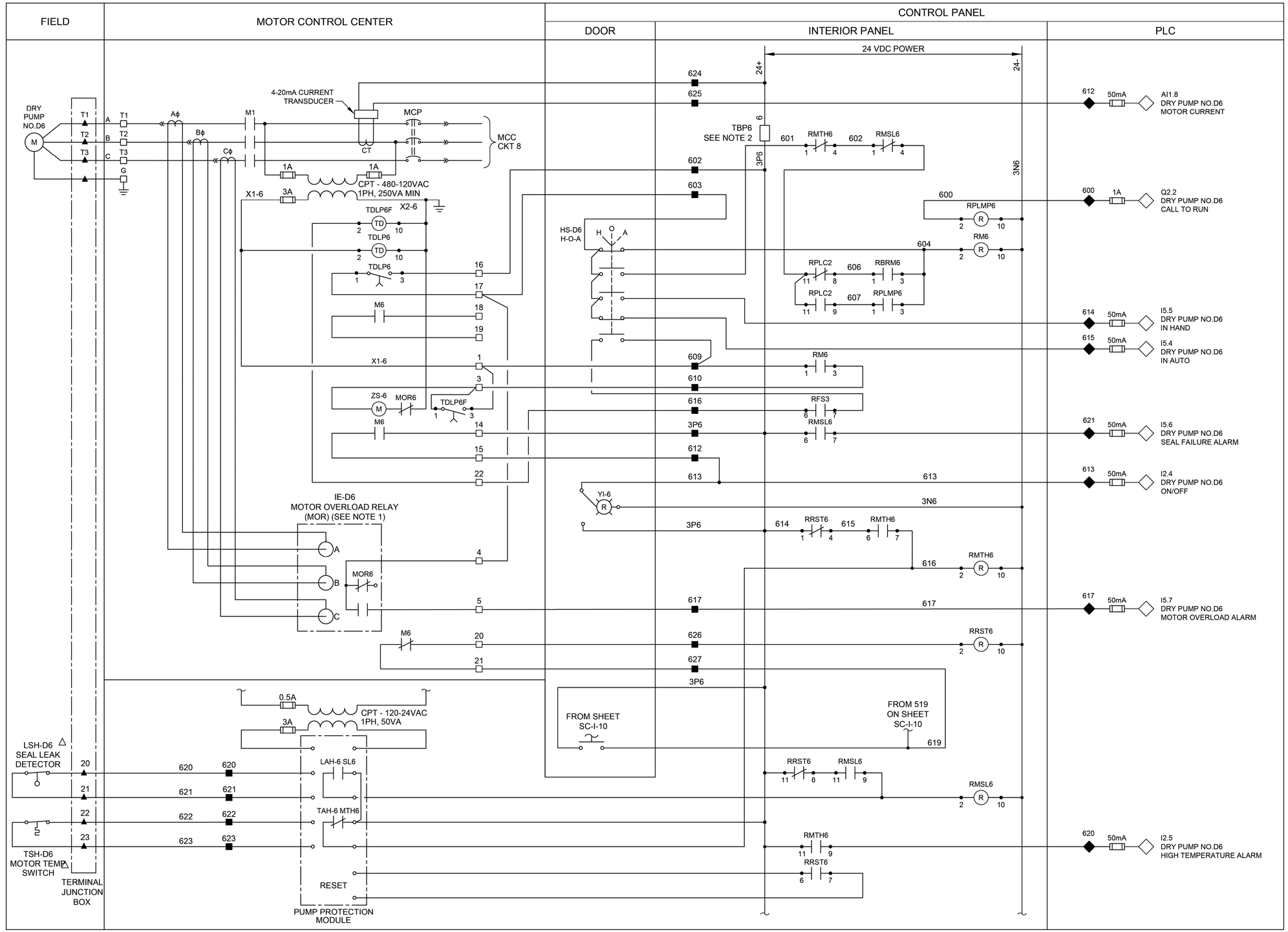

LEGEND

- △ DEVICE OR FIELD TERMINAL LOCATED AT MOTOR
- ✳ DEVICE OR FIELD TERMINAL LOCATED REMOTE
- □ DEVICE OR FIELD TERMINAL LOCATED AT MCC/POWER PANEL
- ■ FIELD TERMINAL LOCATED AT CONTROL PANEL
- ▲ REMOTE TERMINAL
- ● DEVICE TERMINAL NO.
- ◆ PLC INTERFACE TERMINAL

NOTES:

1. MOTOR OVERLOAD RELAY OUTPUT CONTACT SHOWN NORMALLY CLOSED WHEN RELAY IS DE-ENERGIZED, OPEN WHEN ENERGIZED, AND CLOSED WHEN IN ALARM. VERIFY OPERATION OF RELAY PROVIDED AND ADJUST CONNECTION OF RMOR AUXILIARY RELAYS.
2. FUSED TERMINAL ON TERMINAL BLOCK TB4 SEE CONTROL POWER AND COMMUNICATION WIRING DIAGRAM DRAWING NO. SCT-I-3.
3. ALL FLOAT CONTROL CIRCUIT WIRES COLOR SHALL BE YELLOW.

GENERAL NOTES:

1. NO ELECTRICAL MATERIAL, APPARATUS, DEVICES, APPLIANCES, FIXTURES, OR EQUIPMENT SHALL BE SOLD OR INSTALLED IN THE CITY UNLESS THEY ARE IN CONFORMANCE WITH THE PROVISIONS OF SECTION 508 CITY OF HOUSTON ELECTRICAL CODE, THE LAWS OF THE STATE OF TEXAS AND ANY APPLICABLE RULES AND REGULATIONS ISSUED UNDER THE AUTHORITY OF THE STATE STATUES. THE MAKER'S NAME, TRADEMARK, OR OTHER IDENTIFICATION SYMBOL SHALL BE PLACED ON ALL ELECTRICAL MATERIALS, APPARATUS, DEVICES, APPLIANCES, FIXTURES, AND EQUIPMENT USED OR INSTALLED UNDER THE PROVISIONS OF THIS CODE. ALL ELECTRICAL MATERIALS AND EQUIPMENT SHALL BE LISTED AND LABELED FOR THE INTENDED USE AND SHALL BE INCLUDED IN A LIST PUBLISHED BY AN APPROVAL AGENCY.

NO.	DATE	REVISION	APP.

FOR INTERIM REVIEW ONLY NOT INTENDED FOR PERMIT, BIDDING OR CONSTRUCTION PURPOSES.
ENGINEER:
HOSS FOROUZAN
P.E. SERIAL NO.77748
12/15/2025

GAI
Gupta & Associates, Inc.
CONSULTING ENGINEERING
Registration No. F-2593
302 Dennis St.,
Houston, Texas 77006
Tel: 713-636-2936
Fax: 713-636-2987
email: hforouzan@gaiconsulting.com

IDS Engineering Group
13430 NW. Freeway
Suite 700
Houston, Tx. 77040
713.462.3178
TxEng Firm 2726
TxSurv Firm 10110700

CITY OF HOUSTON
HOUSTON PUBLIC WORKS

LIFT STATION RENEWAL AND REPLACEMENT FY 2023

SCOTT NO.3 LIFT STATION PUMP NO. D6 CONTROL WRING DIAGRAM

WBS NUMBER	FOR CITY OF HOUSTON USE ONLY
R-000267-0179-4	
DRAWING SCALE	
HORIZ: VERT:	
CITY OF HOUSTON PM	
NAWARAJ PANTA, P.E.	

DWG. NO.	SHEET NO. 145 OF 321
SCT–I–11	

IDS JOB No. 0057-085-00

FILE PATH: O:\H8108_Lift Station Rehabilitation And Reconstruction (IDS)\6 Drawings\Instrumentation And Control\Working\Scott #3\H8108_SCT-I-11.dwg

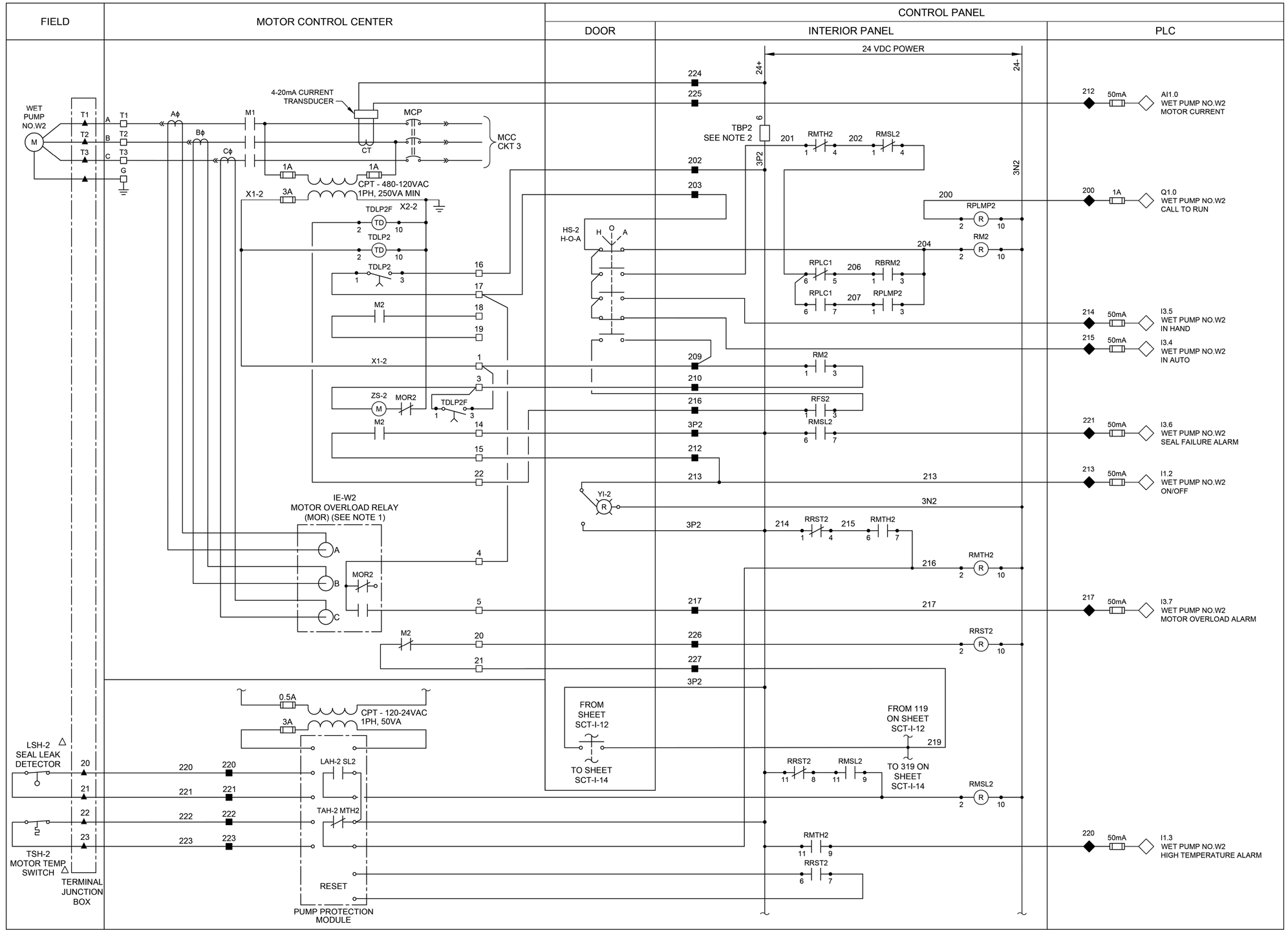

NOTES:

1. MOTOR OVERLOAD RELAY OUTPUT CONTACT SHOWN NORMALLY CLOSED WHEN RELAY IS DE-ENERGIZED, OPEN WHEN ENERGIZED, AND CLOSED WHEN IN ALARM. VERIFY OPERATION OF RELAY PROVIDED AND ADJUST CONNECTION OF RMOR AUXILIARY RELAYS.
2. FUSED TERMINAL ON TERMINAL BLOCK TB4 SEE CONTROL POWER AND COMMUNICATION WIRING DIAGRAM DRAWING NO. SCT-I-3.
3. ALL FLOAT CONTROL CIRCUIT WIRES COLOR SHALL BE YELLOW.

GENERAL NOTES:

1. NO ELECTRICAL MATERIAL, APPARATUS, DEVICES, APPLIANCES, FIXTURES, OR EQUIPMENT SHALL BE SOLD OR INSTALLED IN THE CITY UNLESS THEY ARE IN CONFORMANCE WITH THE PROVISIONS OF SECTION 508 CITY OF HOUSTON ELECTRICAL CODE, THE LAWS OF THE STATE OF TEXAS AND ANY APPLICABLE RULES AND REGULATIONS ISSUED UNDER THE AUTHORITY OF THE STATE STATUES. THE MAKER'S NAME, TRADEMARK, OR OTHER IDENTIFICATION SYMBOL SHALL BE PLACED ON ALL ELECTRICAL MATERIALS, APPARATUS, DEVICES, APPLIANCES, FIXTURES, AND EQUIPMENT USED OR INSTALLED UNDER THE PROVISIONS OF THIS CODE. ALL ELECTRICAL MATERIALS AND EQUIPMENT SHALL BE LISTED AND LABELED FOR THE INTENDED USE AND SHALL BE INCLUDED IN A LIST PUBLISHED BY AN APPROVAL AGENCY.

LEGEND

- △ DEVICE OR FIELD TERMINAL LOCATED AT MOTOR
- ✳ DEVICE OR FIELD TERMINAL LOCATED REMOTE
- □ DEVICE OR FIELD TERMINAL LOCATED AT MCC/POWER PANEL
- ■ FIELD TERMINAL LOCATED AT CONTROL PANEL
- ▲ REMOTE TERMINAL
- ● DEVICE TERMINAL NO.
- ◆ PLC INTERFACE TERMINAL

NO.	DATE	REVISION	APP.

FOR INTERIM REVIEW
ONLY NOT INTENDED FOR
PERMIT, BIDDING OR
CONSTRUCTION PURPOSES.
ENGINEER:
HOSS FOROUZAN
P.E. SERIAL NO.77748
12/15/2025

GAI
Gupta & Associates, Inc.
CONSULTING ENGINEERING
Registration No. F-2593
302 Dennis St.,
Houston, Texas 77006
Tel: 713-636-2936
Fax: 713-636-2987
email: hforouzan@gaiconsulting.com

IDS Engineering Group
13430 NW. Freeway
Suite 700
Houston, Tx. 77040
713.462.3178
TxEng Firm 2726
TxSurv Firm 10110700

CITY OF HOUSTON
HOUSTON PUBLIC WORKS

LIFT STATION RENEWAL
AND REPLACEMENT FY 2023

SCOTT NO.3 LIFT STATION PUMP NO.W2 CONTROL WIRING DIAGRAM

WBS NUMBER	FOR CITY OF HOUSTON USE ONLY
R-000267-0179-4	
DRAWING SCALE	
HORIZ: VERT:	
CITY OF HOUSTON PM	
NAWARAJ PANTA, P.E.	
DWG. NO. SC–I–13	SHEET NO. 146 OF 321

IDS JOB No. 0057-085-00

PLOTTED: 12/11/2025 8:12 PM
FILE PATH: O:\H8108_Lift Station Rehabilitation And Reconstruction (IDS)\6 Drawings\Instrumentation And Control\Working\Scott #3\H8108_SCT-I-13.dwg

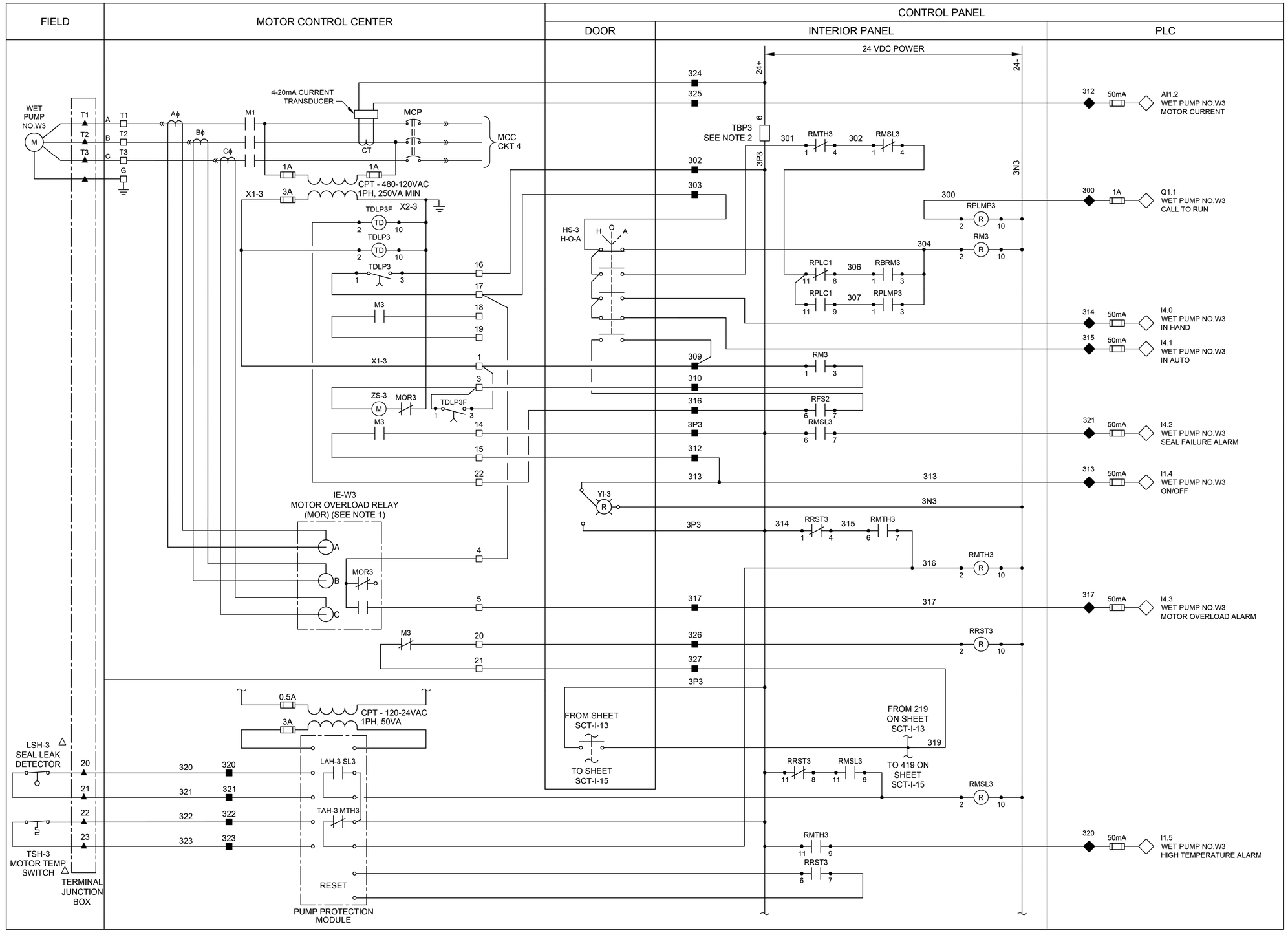

NOTES:

1. MOTOR OVERLOAD RELAY OUTPUT CONTACT SHOWN NORMALLY CLOSED WHEN RELAY IS DE-ENERGIZED, OPEN WHEN ENERGIZED, AND CLOSED WHEN IN ALARM. VERIFY OPERATION OF RELAY PROVIDED AND ADJUST CONNECTION OF RMOR AUXILIARY RELAYS.
2. FUSED TERMINAL ON TERMINAL BLOCK TB4 SEE CONTROL POWER AND COMMUNICATION WIRING DIAGRAM DRAWING NO. SCT-I-3.
3. ALL FLOAT CONTROL CIRCUIT WIRES COLOR SHALL BE YELLOW.

GENERAL NOTES:

1. NO ELECTRICAL MATERIAL, APPARATUS, DEVICES, APPLIANCES, FIXTURES, OR EQUIPMENT SHALL BE SOLD OR INSTALLED IN THE CITY UNLESS THEY ARE IN CONFORMANCE WITH THE PROVISIONS OF SECTION 508 CITY OF HOUSTON ELECTRICAL CODE, THE LAWS OF THE STATE OF TEXAS AND ANY APPLICABLE RULES AND REGULATIONS ISSUED UNDER THE AUTHORITY OF THE STATE STATUES. THE MAKER'S NAME, TRADEMARK, OR OTHER IDENTIFICATION SYMBOL SHALL BE PLACED ON ALL ELECTRICAL MATERIALS, APPARATUS, DEVICES, APPLIANCES, FIXTURES, AND EQUIPMENT USED OR INSTALLED UNDER THE PROVISIONS OF THIS CODE. ALL ELECTRICAL MATERIALS AND EQUIPMENT SHALL BE LISTED AND LABELED FOR THE INTENDED USE AND SHALL BE INCLUDED IN A LIST PUBLISHED BY AN APPROVAL AGENCY.

LEGEND

- △ DEVICE OR FIELD TERMINAL LOCATED AT MOTOR
- ✳ DEVICE OR FIELD TERMINAL LOCATED REMOTE
- □ DEVICE OR FIELD TERMINAL LOCATED AT MCC/POWER PANEL
- ■ FIELD TERMINAL LOCATED AT CONTROL PANEL
- ▲ REMOTE TERMINAL
- ● DEVICE TERMINAL NO.
- ◆ PLC INTERFACE TERMINAL

NO.	DATE	REVISION	APP.

FOR INTERIM REVIEW ONLY NOT INTENDED FOR PERMIT, BIDDING OR CONSTRUCTION PURPOSES.
ENGINEER:
HOSS FOROUZAN
P.E. SERIAL NO.77748
12/15/2025

GAI
Gupta & Associates, Inc.
CONSULTING ENGINEERING
Registration No. F-2593
302 Dennis St.,
Houston, Texas 77006
Tel: 713-636-2936
Fax: 713-636-2987
email: hforouzan@gaiconsulting.com

IDS Engineering Group
13430 NW. Freeway
Suite 700
Houston, Tx. 77040
713.462.3178
TxEng Firm 2726
TxSurv Firm 10110700

CITY OF HOUSTON
HOUSTON PUBLIC WORKS

LIFT STATION RENEWAL AND REPLACEMENT FY 2023

SCOTT NO.3 LIFT STATION PUMP NO.W3 CONTROL WIRING DIAGRAM

WBS NUMBER	FOR CITY OF HOUSTON USE ONLY
R-000267-0179-4	
DRAWING SCALE	
HORIZ: VERT:	
CITY OF HOUSTON PM	
DWG. NO.	NAWARAJ PANTA, P.E.
SC–I–14	SHEET NO. 147 OF 321

IDS JOB No. 0057-085-00

PLOTTED: 12/11/2025 8:12 PM
FILE PATH: O:\H8108_Lift Station Rehabilitation And Reconstruction (IDS)\6 Drawings\Instrumentation And Control\Working\Scott #3\H8108_SCT-I-14.dwg

PLOTTED: 12/11/2025 8:12 PM

FILE PATH: O:\H8108_Lift Station Rehabilitation And Reconstruction (IDS)\6 Drawings\Instrumentation And Control\Working\Scott #3\H8108_SCT-I-15.dwg

FIELD | MOTOR CONTROL CENTER | CONTROL PANEL (DOOR | INTERIOR PANEL | PLC)

WET PUMP NO.W4 — M — T1 T2 T3 G

A T1 — B T2 — C T3

Aϕ Bϕ Cϕ — M1

4-20mA CURRENT TRANSDUCER — CT — MCP — MCC CKT 5

1A 1A — CPT - 480-120VAC 1PH, 250VA MIN

X1-4 — 3A — X2-4

TDLP4F (TD) 2 10

TDLP4 (TD) 2 10

TDLP4 1 3

M4

X1-4

ZS-4 — M — MOR4

TDLP4F 1 3

M4

IE-4 MOTOR OVERLOAD RELAY (MOR) (SEE NOTE 1)

A B C — MOR4

0.5A — 3A — CPT - 120-24VAC 1PH, 50VA

LSH-W4 SEAL LEAK DETECTOR △ — 20 21

TSH-W4 MOTOR TEMP SWITCH △ — 22 23

TERMINAL JUNCTION BOX

LAH-4 SL4

TAH-4 MTH4

RESET

PUMP PROTECTION MODULE

16 17 18 19 1 3 14 15 22 4 5 20 21

420 421 422 423

420 421 422 423

24 VDC POWER — 24+ — 24-

424 425 402 403 409 410 416 3P4 412 413 417 426 427 3P4

TBP4 SEE NOTE 2 — 6

401 RMTH4 1 4 — 402 RMSL4 1 4

HS-4 H-O-A — H O A

400 RPLMP4 R 2 10

404 RM4 R 2 10

RPLC2 1 4 — 406 RBRM4 1 3

RPLC2 1 3 — 407 RPLMP4 1 3

RM4 1 3

RFS2 11 9 — RFLP 1 4

RMSL4 6 7

YI-4 R

3N4

414 RRST4 1 4 — 415 RMTH4 6 7

416 RMTH4 R 2 10

417

RRST4 R 2 10

FROM SHEET SCT-I-14

TO SHEET SCT-I-16

FROM 319 ON SHEET SCT-I-14 — 419

TO 519 ON SHEET SCT-I-16

RRST4 11 8 — RMSL4 11 9

RMSL4 R 2 10

RMTH4 11 9

RRST4 6 7

412	50mA	AI1.4 WET PUMP NO.W4 MOTOR CURRENT
400	1A	Q2.0 WET PUMP NO.W4 CALL TO RUN
414	50mA	I4.5 WET PUMP NO.W4 IN HAND
415	50mA	I4.4 WET PUMP NO.W4 IN AUTO
421	50mA	I4.6 WET PUMP NO.W4 SEAL FAILURE ALARM
413	50mA	I2.0 WET PUMP NO.W4 ON/OFF
417	50mA	I4.7 WET PUMP NO.W4 MOTOR OVERLOAD ALARM
420	50mA	I2.1 WET PUMP NO.W4 HIGH TEMPERATURE ALARM

△ DEVICE OR FIELD TERMINAL LOCATED AT MOTOR

✳ DEVICE OR FIELD TERMINAL LOCATED REMOTE

□ DEVICE OR FIELD TERMINAL LOCATED AT MCC/POWER PANEL

■ FIELD TERMINAL LOCATED AT CONTROL PANEL

▲ REMOTE TERMINAL

● DEVICE TERMINAL NO.

◆ PLC INTERFACE TERMINAL

NOTES:

1. MOTOR OVERLOAD RELAY OUTPUT CONTACT SHOWN NORMALLY CLOSED WHEN RELAY IS DE-ENERGIZED, OPEN WHEN ENERGIZED, AND CLOSED WHEN IN ALARM. VERIFY OPERATION OF RELAY PROVIDED AND ADJUST CONNECTION OF RMOR AUXILIARY RELAYS.
2. FUSED TERMINAL ON TERMINAL BLOCK TB4 SEE CONTROL POWER AND COMMUNICATION WIRING DIAGRAM DRAWING NO. SCT-I-3.
3. ALL FLOAT CONTROL CIRCUIT WIRES COLOR SHALL BE YELLOW.

GENERAL NOTES:

1. NO ELECTRICAL MATERIAL, APPARATUS, DEVICES, APPLIANCES, FIXTURES, OR EQUIPMENT SHALL BE SOLD OR INSTALLED IN THE CITY UNLESS THEY ARE IN CONFORMANCE WITH THE PROVISIONS OF SECTION 508 CITY OF HOUSTON ELECTRICAL CODE, THE LAWS OF THE STATE OF TEXAS AND ANY APPLICABLE RULES AND REGULATIONS ISSUED UNDER THE AUTHORITY OF THE STATE STATUES. THE MAKER'S NAME, TRADEMARK, OR OTHER IDENTIFICATION SYMBOL SHALL BE PLACED ON ALL ELECTRICAL MATERIALS, APPARATUS, DEVICES, APPLIANCES, FIXTURES, AND EQUIPMENT USED OR INSTALLED UNDER THE PROVISIONS OF THIS CODE. ALL ELECTRICAL MATERIALS AND EQUIPMENT SHALL BE LISTED AND LABELED FOR THE INTENDED USE AND SHALL BE INCLUDED IN A LIST PUBLISHED BY AN APPROVAL AGENCY.

NO.	DATE	REVISION	APP.

FOR INTERIM REVIEW
ONLY NOT INTENDED FOR
PERMIT, BIDDING OR
CONSTRUCTION PURPOSES.
ENGINEER:
HOSS FOROUZAN
P.E. SERIAL NO.77748
12/15/2025

GAI
Gupta & Associates, Inc.
CONSULTING ENGINEERING
Registration No. F-2593
302 Dennis St.,
Houston, Texas 77006
Tel: 713-636-2936
Fax: 713-636-2987
email: hforouzan@gaiconsulting.com

IDS Engineering Group
13430 NW. Freeway
Suite 700
Houston, Tx. 77040
713.462.3178
TxEng Firm 2726
TxSurv Firm 10110700

CITY OF HOUSTON
HOUSTON PUBLIC WORKS

LIFT STATION RENEWAL AND REPLACEMENT FY 2023

SCOTT NO.3 LIFT STATION PUMP NO.W4 CONTROL WIRING DIAGRAM

WBS NUMBER	FOR CITY OF HOUSTON USE ONLY
R-000267-0179-4	
DRAWING SCALE	
HORIZ: VERT:	
CITY OF HOUSTON PM	
NAWARAJ PANTA, P.E.	
DWG. NO. SCT–I–15	SHEET NO. 148 OF 321

IDS JOB No. 0057-085-00

PLOTTED: 12/11/2025 8:12 PM

HMI

CONTROL PANEL PLC

CONTROL PANEL

FIELD

FIELD

TANK LEAK ALARM — MA 001

LEVEL INDICATION — LI 101

HIGH ALARM — LAH 101

LOW ALARM — LAL 101

PUMP NO. 1 RUN — YFS 101

PUMP NO. 1 FAIL — XA 101

PUMP NO. 1 START/ STOP — YCS 101

PUMP NO. 1 SPEED IND. — SI 101

PUMP NO. 1 SPEED CNTRL. — SC 101

PUMP NO. 2 RUN — YFS 102

PUMP NO. 2 FAIL — XA 102

PUMP NO. 2 START/ STOP — YCS 102

PUMP NO. 2 SPEED IND. — SI 102

PUMP NO. 2 SPEED CNTRL. — SC 102

FLOW IND. — FI 101

FLOW TOTALIZER — FRQ 101

FROM SHEET SCT-I-2

SODIUM NITRATE CONTROL PANEL (1)

LT 101

CHEMICAL FEED SYSTEM (1)

CALIBRATION CHAMBER

PRESSURE RELIEF VALVE

PRESSURE GAUGE W/ REGULATOR — PI 101

PULSATION DAMPER

BACK PRESSURE VALVE

120V AC — FIT 101

TRANSIT FLOW METER

TO CHEMICAL FEED MANHOLE

M

PERISTALTIC SODIUM NITRATE PMP-CN-101

SIGHT GLASS

PRESSURE RELIEF VALVE

M

PERISTALTIC SODIUM NITRATE PMP-CN-102

SIGHT GLASS

LDS

NEW SODIUM NITRATE TANK T-001

LEAK DETECTION SWITCH

DOUBLE WALL CONTAINMENT WITH LEAK DETECTION SWITCH

DRAIN VALVE

NOTES:

(1) TO BE PROVIDED BY CHEMICAL FEED SYSTEM MANUFACTURER.

GENERAL NOTES:

1. NO ELECTRICAL MATERIAL, APPARATUS, DEVICES, APPLIANCES, FIXTURES, OR EQUIPMENT SHALL BE SOLD OR INSTALLED IN THE CITY UNLESS THEY ARE IN CONFORMANCE WITH THE PROVISIONS OF SECTION 508 CITY OF HOUSTON ELECTRICAL CODE, THE LAWS OF THE STATE OF TEXAS AND ANY APPLICABLE RULES AND REGULATIONS ISSUED UNDER THE AUTHORITY OF THE STATE STATUES. THE MAKER'S NAME, TRADEMARK, OR OTHER IDENTIFICATION SYMBOL SHALL BE PLACED ON ALL ELECTRICAL MATERIALS, APPARATUS, DEVICES, APPLIANCES, FIXTURES, AND EQUIPMENT USED OR INSTALLED UNDER THE PROVISIONS OF THIS CODE. ALL ELECTRICAL MATERIALS AND EQUIPMENT SHALL BE LISTED AND LABELED FOR THE INTENDED USE AND SHALL BE INCLUDED IN A LIST PUBLISHED BY AN APPROVAL AGENCY.

NO.	DATE	REVISION	APP.

FOR INTERIM REVIEW
ONLY NOT INTENDED FOR
PERMIT, BIDDING OR
CONSTRUCTION PURPOSES.
ENGINEER:
HOSS FOROUZAN
P.E. SERIAL NO.77748
12/15/2025

GAI
Gupta & Associates, Inc.
CONSULTING ENGINEERING
Registration No. F-2593
302 Dennis St.,
Houston, Texas 77006
Tel: 713-636-2936
Fax: 713-636-2987
email: hforouzan@gaiconsulting.com

IDS Engineering Group
13430 NW. Freeway
Suite 700
Houston, Tx. 77040
713.462.3178
TxEng Firm 2726
TxSurv Firm 10110700

CITY OF HOUSTON

HOUSTON PUBLIC WORKS

LIFT STATION RENEWAL AND REPLACEMENT FY 2023

SCOTT NO.3 LIFT STATION SODIUM NITRATE FEED PUMPS P&ID DIAGRAM

WBS NUMBER	FOR CITY OF HOUSTON USE ONLY
R-000267-0179-4	
DRAWING SCALE	
HORIZ: VERT:	
CITY OF HOUSTON PM	
NAWARAJ PANTA, P.E.	
DWG. NO. SCT–I–16	SHEET NO. 149 OF 321

IDS JOB No. 0057-085-00

FILE PATH: O:\H8108_Lift Station Rehabilitation And Reconstruction (IDS)\6 Drawings\Instrumentation And Control\Working\Scott #3\H8108_SCT–I–16.dwg

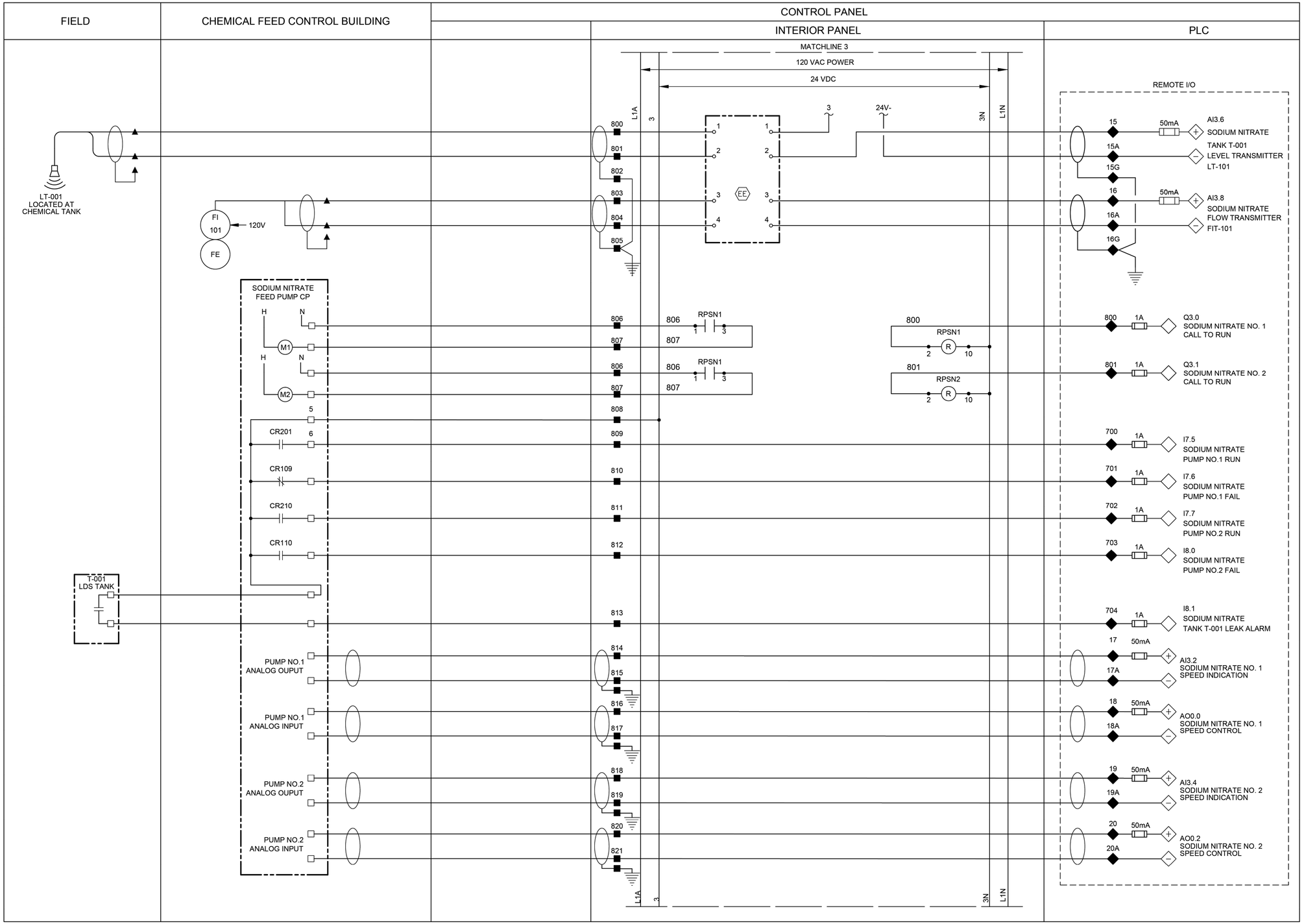

GENERAL NOTES:

1. NO ELECTRICAL MATERIAL, APPARATUS, DEVICES, APPLIANCES, FIXTURES, OR EQUIPMENT SHALL BE SOLD OR INSTALLED IN THE CITY UNLESS THEY ARE IN CONFORMANCE WITH THE PROVISIONS OF SECTION 508 CITY OF HOUSTON ELECTRICAL CODE, THE LAWS OF THE STATE OF TEXAS AND ANY APPLICABLE RULES AND REGULATIONS ISSUED UNDER THE AUTHORITY OF THE STATE STATUES. THE MAKER'S NAME, TRADEMARK, OR OTHER IDENTIFICATION SYMBOL SHALL BE PLACED ON ALL ELECTRICAL MATERIALS, APPARATUS, DEVICES, APPLIANCES, FIXTURES, AND EQUIPMENT USED OR INSTALLED UNDER THE PROVISIONS OF THIS CODE. ALL ELECTRICAL MATERIALS AND EQUIPMENT SHALL BE LISTED AND LABELED FOR THE INTENDED USE AND SHALL BE INCLUDED IN A LIST PUBLISHED BY AN APPROVAL AGENCY.

FOR INTERIM REVIEW
ONLY NOT INTENDED FOR
PERMIT, BIDDING OR
CONSTRUCTION PURPOSES.
ENGINEER:
HOSS FOROUZAN
P.E. SERIAL NO.77748
12/15/2025

GAI
Gupta & Associates, Inc.
CONSULTING ENGINEERING
Registration No. F-2593
302 Dennis St.,
Houston, Texas 77006
Tel: 713-636-2936
Fax: 713-636-2987
email: hforouzan@gaiconsulting.com

IDS Engineering Group
13430 NW. Freeway
Suite 700
Houston, Tx. 77040
713.462.3178
TxEng Firm 2726
TxSurv Firm 10110700

CITY OF HOUSTON
HOUSTON PUBLIC WORKS

LIFT STATION RENEWAL
AND REPLACEMENT FY 2023

SCOTT NO.3 LIFT STATION
SODIUM NITRATE FEED
PUMPS WIRING DIAGRAM

WBS NUMBER	FOR CITY OF HOUSTON USE ONLY
R-000267-0179-4	
DRAWING SCALE	
HORIZ: VERT:	
CITY OF HOUSTON PM	
NAWARAJ PANTA, P.E.	
SHEET NO. 150 OF 321	

DWG. NO.
SCT–I–17

LEGEND

- △ DEVICE OR FIELD TERMINAL LOCATED AT EQUIPMENT
- ✳ DEVICE OR FIELD TERMINAL LOCATED REMOTE
- □ DEVICE OR FIELD TERMINAL LOCATED AT CHEMICAL CONTROL PANEL
- ■ FIELD TERMINAL LOCATED AT CONTROL PANEL
- ▲ REMOTE TERMINAL
- ● DEVICE TERMINAL NO.
- ◆ PLC INTERFACE TERMINAL

NO.	DATE	REVISION	APP.

PLOTTED: 12/11/2025 8:12 PM

FILE PATH: O:\H8108_Lift Station Rehabilitation And Reconstruction (IDS)\6 Drawings\Instrumentation And Control\Working\Scott #3\H8108_SCT-I-17.dwg

IDS JOB No. 0057-085-00

PLOTTED: 12/11/2025 8:12 PM

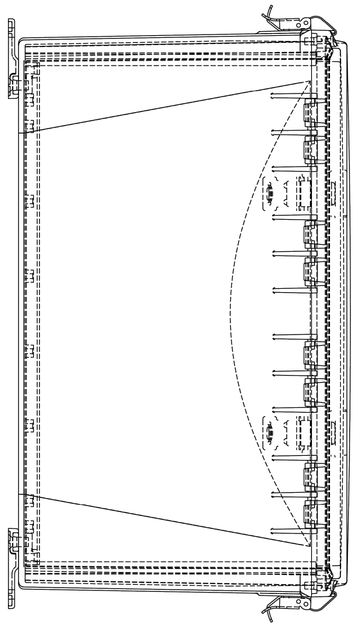

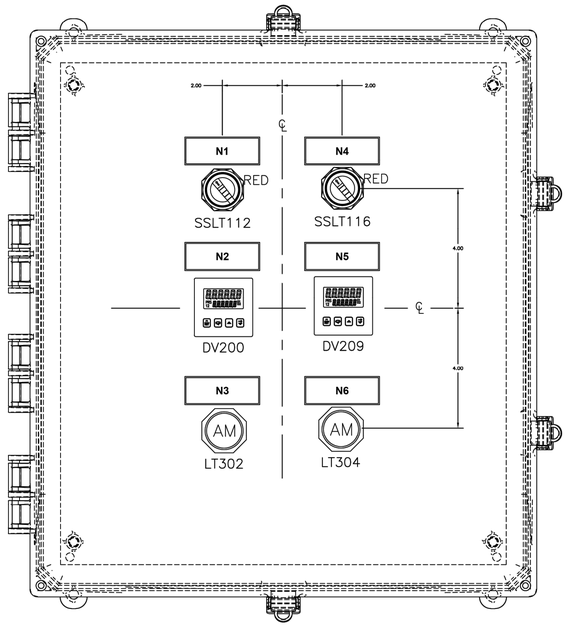

TYPE 4X ENCLOSURE
18x16x10

CHEMICAL FEED PUMP CONTROL PANEL

DETAIL 1
NTS –

CHEMICAL FEED PUMP CONTROL PANEL

DESIGNATION	ENGRAVED
N1	PUMP A HAND-OFF-REMOTE
N2	PUMP A SPEED
N3	PUMP A ALARM
N4	PUMP B HAND-OFF-REMOTE
N5	PUMP B SPEED
N6	PUMP B ALARM

GENERAL NOTES:

1. NO ELECTRICAL MATERIAL, APPARATUS, DEVICES, APPLIANCES, FIXTURES, OR EQUIPMENT SHALL BE SOLD OR INSTALLED IN THE CITY UNLESS THEY ARE IN CONFORMANCE WITH THE PROVISIONS OF SECTION 508 CITY OF HOUSTON ELECTRICAL CODE, THE LAWS OF THE STATE OF TEXAS AND ANY APPLICABLE RULES AND REGULATIONS ISSUED UNDER THE AUTHORITY OF THE STATE STATUES. THE MAKER'S NAME, TRADEMARK, OR OTHER IDENTIFICATION SYMBOL SHALL BE PLACED ON ALL ELECTRICAL MATERIALS, APPARATUS, DEVICES, APPLIANCES, FIXTURES, AND EQUIPMENT USED OR INSTALLED UNDER THE PROVISIONS OF THIS CODE. ALL ELECTRICAL MATERIALS AND EQUIPMENT SHALL BE LISTED AND LABELED FOR THE INTENDED USE AND SHALL BE INCLUDED IN A LIST PUBLISHED BY AN APPROVAL AGENCY.

NO.	DATE	REVISION	APP.

FOR INTERIM REVIEW
ONLY NOT INTENDED FOR
PERMIT, BIDDING OR
CONSTRUCTION PURPOSES.
ENGINEER:
HOSS FOROUZAN
P.E. SERIAL NO.77748
12/15/2025

GAI
Gupta & Associates, Inc.
CONSULTING ENGINEERING
Registration No. F-2593
302 Dennis St.,
Houston, Texas 77006
Tel: 713-636-2936
Fax: 713-636-2987
email: hforouzan@gaiconsulting.com

IDS Engineering Group
13430 NW. Freeway
Suite 700
Houston, Tx. 77040
713.462.3178
TxEng Firm 2726
TxSurv Firm 10110700

CITY OF HOUSTON
HOUSTON PUBLIC WORKS

LIFT STATION RENEWAL
AND REPLACEMENT FY 2023

SCOTT NO.3 LIFT STATION SODIUM NITRATE FEED PUMPS CONTROL PANEL

WBS NUMBER	FOR CITY OF HOUSTON USE ONLY
R-000267-0179-4	
DRAWING SCALE	
HORIZ: VERT:	
CITY OF HOUSTON PM	
NAWARAJ PANTA, P.E.	
SHEET NO. 151 OF 321	

DWG. NO. SCT–I–18

IDS JOB No. 0057-085-00

FILE PATH: O:\H8108_Lift Station Rehabilitation And Reconstruction (IDS)\6 Drawings\Instrumentation And Control\Working\Scott #3\H8108_SCT-I-18.dwg

PLOTTED: 12/17/2025 8:17 AM



N
W E
S

60' 0' 60'
SCALE
1" = 60'

NO.	DATE	REVISION	APP.

BENCHMARK:

FLOODPLAIN REFERENCE MARK NUMBER 150010 IS A BRASS DISC IN CONCRETE STAMPED 150010, LOCATED ON THE NORTHWEST CORNER OF MARKET STREET BRIDGE APPROXIMATELY 0.20 MILES SOUTHWEST FROM THE INTERSECTION OF IH 10 IN KEY MAP 497J IN GREENS BAYOU WATERSHED.

ELEV. 30.07 FEET NAVD 1988, 2001 ADJUSTMENT

FLOODPLAIN NOTE:

FLOODPLAIN REFERENCE MARK NUMBER 150010 IS A BRASS DISC IN CONCRETE LOCATED ON THE WEST SIDE OF BRIDGE ALONG MARKET ST. AT GREENS BAYOU.

ELEV. 30.07 FEET NAVD 1988, 2001 ADJUSTMENT
100-YR ELEV. 18.50'
500-YR ELEV. 23.00'
FIRM PANEL: 48201C0720M

EXISTING UTILITY NOTE:

EXISTING UNDERGROUND UTILITY INFORMATION (TYPE, SIZE & OWNERSHIP) ARE SHOWN APPROXIMATELY BASED ON THE AVAILABLE RECORD DRAWINGS AND FIELD VERIFICATION (WHERE FEASIBLE) WITHOUT PROBING AND EXCAVATION. NO WARRANTY IS MADE AS TO THE ACCURACY OR COMPLETENESS OF UTILITY LOCATION SHOWN ON THE DRAWING. CAUTION SHOULD BE EXERCISED WHEN EXCAVATING OR BORE AND JACKING IN THE VICINITY OF UNDERGROUND UTILITIES. OWNERS OF THE UTILITIES SHOULD BE NOTIFIED PRIOR TO SUCH ACTIVITIES. CALL UTILITY COORDINATING COMMITTEE AT 713-223-4567, AT LEAST 48 HOURS PRIOR TO EXCAVATING IN THE STREET RIGHT-OF-WAY.

LEGEND

EXISTING LIFT STATION ACCESS ROUTE. CONTRACTOR RESPONSIBLE FOR COORDINATING ANY ADDITIONAL ACCESS ROUTES FROM THE PUBLIC ROW TO THE EXISTING LIFT STATION SITE.

NOTES:

1. CONTRACTOR MUST MAINTAIN ACCESS TO ALL DRIVEWAYS AND BUSINESS AT ALL TIMES.
2. CONTRACTOR MUST MAINTAIN ACCESS TO TWO (2) HOME DEPT LOADING BAYS AT ALL TIMES.
3. CONTRACTOR TO COORDINATE WITH PROPERTY OWNERS FOR RELOCATION OF STORED ITEMS WITHIN EXISTING ACCESS EASEMENT.

IDS Engineering Group
13430 NW. Freeway, Suite 700
Houston, Tx. 77040
713.462.3178
TxEng Firm 2726 | TxSurv Firm 10110700

SURVEYED BY: KUO & ASSOCIATES, INC.
TBPE FIRM #F-4578; TBPLS FIRM #1007560

THIS DOCUMENT IS RELEASED FOR THE PURPOSE OF REVIEW UNDER THE AUTHORITY OF MARCEL KHOUW, P.E. 101807 ON 12/17/2025. IT IS NOT TO BE USED FOR CONSTRUCTION PURPOSES.

CITY OF HOUSTON
HOUSTON PUBLIC WORKS

LIFT STATION RENEWAL AND REPLACEMENT FY 2023

MARKET STREET EXISTING SITE ACCESS PLAN

WBS NUMBER	FOR CITY OF HOUSTON USE ONLY
R-000267-0179-4	
DRAWING SCALE	
HORIZ: 1" = 60' VERT: N/A	
CITY OF HOUSTON PM	
NAWARAJ PANTA, P.E.	

DWG. NO.	SHEET NO.
MKT-C-01	152 OF 321

FILE PATH: \\idseg.com\FS\Projects\0000\005708500 CoH Lift Stations - FY 2023\CAD\DWG\PRODUCTION\152-MARKET ST SITE ACCESS.dwg

PLOTTED: 12/17/2025 8:17 AM

FILE PATH: \\dseg.com\FS\Projects\0000\005708500 CoH Lift Stations - FY 2023\CAD\DWG\PRODUCTION\153-MARKET ST SITE PLAN AND DEMO.dwg

LEGEND

- EXISTING CONCRETE PAVEMENT
- REMOVE EXISTING CONCRETE PAVEMENT
- SITE DEMOLITION
- EXISTING CONCRETE SIDEWALK
- REMOVE EXISTING CONCRETE SIDEWALK
- ABANDON ANY UNDERGROUND UTILITY
- REMOVE ANY UNDERGROUND UTILITY
- REMOVE EXISTING FENCE
- FILTER FABRIC FENCE

NOTES:

1. EXISTING LIFT STATION WET WELL TO REMAIN.
2. SEE ELECTRICAL PLANS ON SHEET MKT-E-01 FOR ELECTRICAL DEMOLITION.
3. CONTRACTOR SHALL COORDINATE WITH CENTERPOINT ENERGY TO DE-ENERGIZE THE LIFT STATION AND OTHER ELECTRICAL EQUIPMENT ON SITE.
4. CONTRACTOR SHALL PROTECT THE EXISTING CONDUIT AND CABLE. IF CABLE OR CONDUIT IS DAMAGED CONTRACTOR SHALL REPLACE AT NO ADDITIONAL COST TO THE CITY.
5. REMOVE THE EXISTING FORCE MAIN TO THE NEAREST PIPE JOINT AND TIE PROP FORCE MAIN TO EXIST. USE RESTRAINED JOINTS.
6. THE EXISTING FORCE MAIN IS ASSUMED TO BE DUCTILE IRON BELL AND SPIGOT AND SHALL BE FIELD VERIFIED BY THE CONTRACTOR.

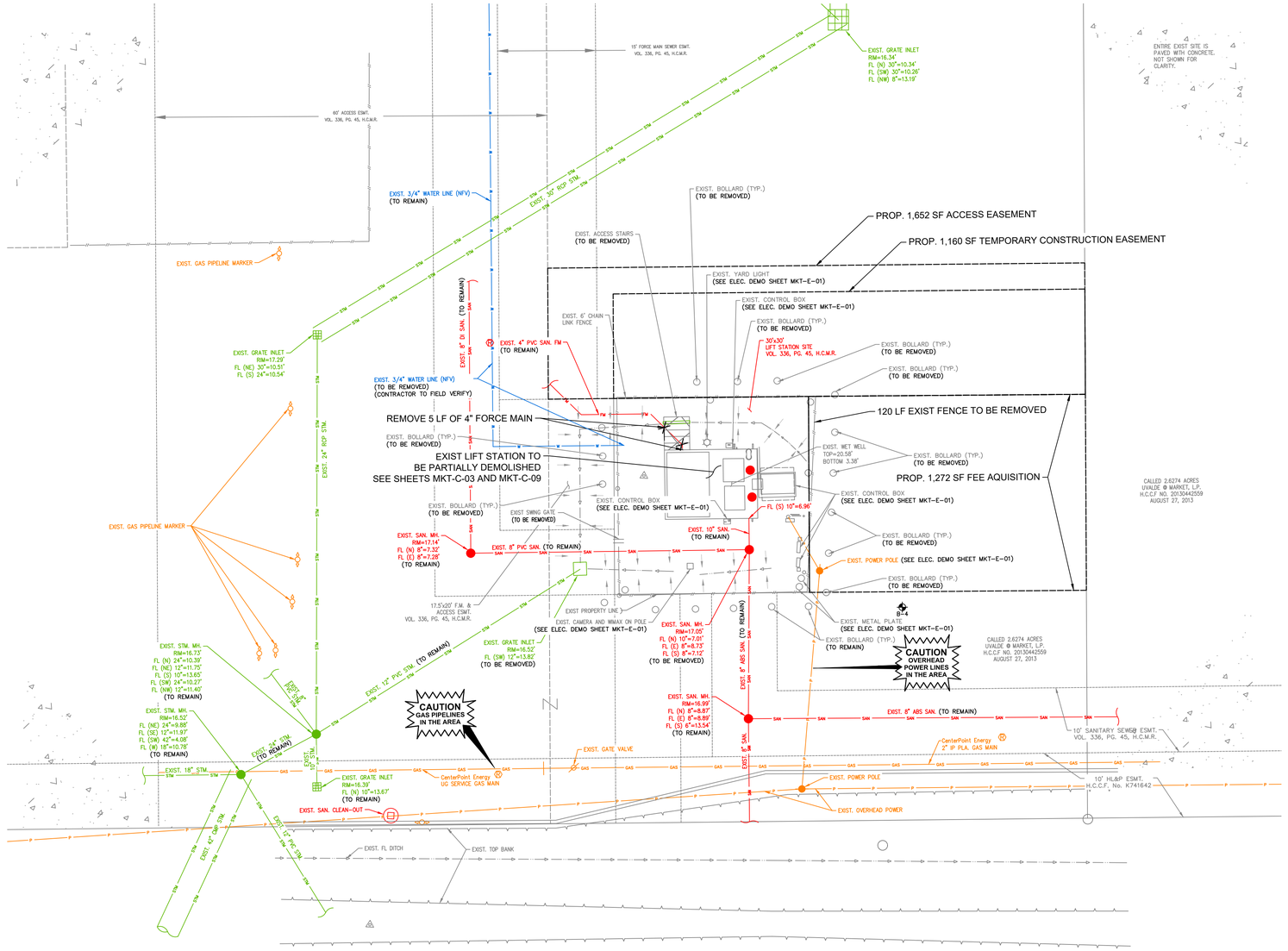

10' 0' 10'
SCALE
1" = 10'

BENCHMARK:

FLOODPLAIN REFERENCE MARK NUMBER 150010 IS A BRASS DISC IN CONCRETE STAMPED 150010, LOCATED ON THE NORTHWEST CORNER OF MARKET STREET BRIDGE APPROXIMATELY 0.20 MILES SOUTHWEST FROM THE INTERSECTION OF IH 10 IN KEY MAP 497J IN GREENS BAYOU WATERSHED.

ELEV. 30.07 FEET NAVD 1988, 2001 ADJUSTMENT

FLOODPLAIN NOTE:

FLOODPLAIN REFERENCE MARK NUMBER 150010 IS A BRASS DISC IN CONCRETE LOCATED ON THE WEST SIDE OF BRIDGE ALONG MARKET ST. AT GREENS BAYOU.

ELEV. 30.07 FEET NAVD 1988, 2001 ADJUSTMENT
100-YR ELEV. 18.50'
500-YR ELEV. 23.00'
FIRM PANEL: 48201C0720M

EXISTING UTILITY NOTE:

EXISTING UNDERGROUND UTILITY INFORMATION (TYPE, SIZE & OWNERSHIP) ARE SHOWN APPROXIMATELY BASED ON THE AVAILABLE RECORD DRAWINGS AND FIELD VERIFICATION (WHERE FEASIBLE) WITHOUT PROBING AND EXCAVATION. NO WARRANTY IS MADE AS TO THE ACCURACY OR COMPLETENESS OF UTILITY LOCATION SHOWN ON THE DRAWING. CAUTION SHOULD BE EXERCISED WHEN EXCAVATING OR BORE AND JACKING IN THE VICINITY OF UNDERGROUND UTILITIES. OWNERS OF THE UTILITIES SHOULD BE NOTIFIED PRIOR TO SUCH ACTIVITIES. CALL UTILITY COORDINATING COMMITTEE AT 713-223-4567, AT LEAST 48 HOURS PRIOR TO EXCAVATING IN THE STREET RIGHT-OF-WAY.

NO.	DATE	REVISION	APP.

NOTICE:
FOR YOUR SAFETY, YOU ARE REQUIRED BY TEXAS LAW TO CALL 811 AT LEAST 48 HOURS BEFORE YOU DIG SO THAT UNDERGROUND LINES CAN BE MARKED. THIS SIGNATURE DOES NOT FULFILL YOUR OBLIGATION TO CALL 811

VERIFICATION OF PRIVATE UTILITY LINES

Date

CenterPoint Energy natural gas utilities shown. (Gas service lines are not shown). This signature not be used for conflict verification.

Signature valid for six months.

Date

CenterPoint Energy/UNDERGROUND Electrical Facilities Verification ONLY. (This signature verifies existing underground facilities – not to be used for conflict verification)

Signature valid for six months.

Date

Approved for AT&T underground conduit facilities only.
Signature valid for one year.

IDS Engineering Group
13430 NW. Freeway, Suite 700
Houston, Tx. 77040
713.462.3178
TxEng Firm 2726 | TxSurv Firm 10110700

THIS DOCUMENT IS RELEASED FOR THE PURPOSE OF REVIEW UNDER THE AUTHORITY OF MARCEL KHOUW, P.E. 101807 ON 12/17/2025. IT IS NOT TO BE USED FOR CONSTRUCTION PURPOSES.

SURVEYED BY: KUO & ASSOCIATES, INC.
TBPE FIRM #F-4578; TBPLS FIRM #1007560

CITY OF HOUSTON
HOUSTON PUBLIC WORKS

LIFT STATION RENEWAL AND REPLACEMENT FY 2023

MARKET STREET LIFT STATION SITE DEMOLITION PLAN AND SWPPP

WBS NUMBER	FOR CITY OF HOUSTON USE ONLY
R-000267-0179-4	
DRAWING SCALE	
HORIZ: 1" = 10' VERT: N/A	
CITY OF HOUSTON PM	
NAWARAJ PANTA, P.E.	
SHEET NO. 153 OF 321	

DWG. NO. MKT-C-02

PLOTTED: 12/17/2025 8:17 AM

LIFT STATION DEMOLITION AND ABANDONMENT NOTES:

1. THIS DRAWING IS A REPRODUCTION OF THE EXISTING LIFT STATION CONSTRUCTION DRAWINGS AND INTENDED TO PROVIDE GENERAL INFORMATION FOR STATION DEMOLITION. THE CONTRACTOR IS RESPONSIBLE FOR DETERMINING THE ACTUAL WORK REQUIRED FOR DEMOLITION AND REMOVAL OF STRUCTURAL, MECHANICAL, AND ELECTRICAL COMPONENTS. A CLAIM FOR CHANGED CONDITIONS BETWEEN THE EXISTING CONDITIONS AND THE RECORD DRAWING WILL NOT BE CONSIDERED.
2. NO DEMOLITION IS TO BE PERFORMED UNTIL BYPASS PUMPING HAS BEEN INSTALLED AND OPERATIONAL.
3. THE CITY OF HOUSTON WILL RETAIN SALVAGE RIGHTS TO ALL MATERIAL AND EQUIPMENT. ALL MATERIALS AND EQUIPMENT RETAINED BY THE CITY OF HOUSTON SHALL BE DELIVERED TO A POINT DESIGNATED BY CITY OF HOUSTON REPRESENTATIVE (MR. ARTURO CARRILLO 832-395-3558). ANY MATERIAL OR EQUIPMENT NOT RETAINED BY THE CITY OF HOUSTON SHALL BE REMOVED FROM THE SITE AND DISPOSED OF BY THE CONTRACTOR IN ACCORDANCE WITH APPLICABLE REGULATIONS.
4. WHEN REMOVING EXISTING PUMPS, CONTRACTOR SHALL LEAVE AS MUCH WIRE/CABLE AS POSSIBLE IN ORDER FOR THE CITY TO REUSE THE PUMPS.
5. CONTRACTOR SHALL NOTIFY TEXAS DEPARTMENT OF HEALTH (DEPARTMENT) ON A FORM SPECIFIED BY THE DEPARTMENT OF ANY ASBESTOS ABATEMENT ACTIVITY, RENOVATION OR OPERATIONS AND MAINTENANCE ACTIVITY AFFECTING ASBESTOS-CONTAINING BUILDING MATERIALS, OR ANY DEMOLITION IN FACILITIES OR PUBLIC BUILDINGS.
6. CONCRETE SLAB AND WALLS INDICATED ON THIS PLAN SHALL BE REMOVED TO 5 FEET BELOW FINISHED GRADE AS PER SPECIFICATION SECTION 02220.
7. ALL REMAINING WALL OPENINGS IN THE VALVE VAULT SHALL BE SEALED WITH NON-SHRINK GROUT.
8. CONTRACTOR SHALL BACKFILL THE ABANDONED AND DEMOLISHED VALVE VAULT. BACKFILL SHALL BE FLOWABLE FILL AND COMPACTED PROPERLY UP TO THE PROPOSED CONCRETE DISCHARGE ASSEMBLY PAD.
9. THE CONTRACTOR SHALL COORDINATE WITH CENTERPOINT ENERGY TO TEMPORARILY DISCONNECT ELECTRICAL POWER AS NEEDED.
10. THE EXISTING WET WELL SHALL BE CLEANED OF ALL DEBRIS, WASTEWATER AND OTHER RESIDUES BY AN APPROVED CITY OF HOUSTON DISPOSAL CONTRACTOR.
11. THE CONTRACTOR SHALL DISPOSE OF ANY LIQUID OR SOLID WASTE FOUND IN THE WET WELL AT A DISPOSAL FACILITY LICENSED AND APPROVED BY THE STATE OF TEXAS. THE CONTRACTOR SHALL BE RESPONSIBLE FOR THE COST OF TRANSPORTATION, DISPOSAL AND TESTING REQUIRED BY STATE AND FEDERAL REGULATORY AGENCIES, AND BY THE DISPOSAL FACILITY.
12. PRIOR TO THE CLEAN-OUT AND CLEANING OF THE EXISTING LIFT STATION WET WELL, CONTRACTOR TO SUBMIT PROOF TO C.O.H. CONSTRUCTION PM THAT TRANSPORTER/HAULER TO BE USED FOR THE TRANSPORT OF THE CONTENTS OF THE WET WELL (I.E., SOLIDS, GRIT, SEWAGE SLUDGE, AND DOMESTIC SLUDGE, ETC.) IS REGISTERED BY THE TEXAS COMMISSION ON ENVIRONMENTAL QUALITY (TCEQ) AS A SLUDGE TRANSPORTER AND THE TRANSPORTER'S REGISTRATION IS CURRENT AND VALID DURING THE PERIOD OF PERFORMANCE.
13. CONTRACTOR SHALL SUBMIT PROOF OF SUBMISSION OF REQUIRED ASBESTOS/DEMOLITION NOTIFICATION FORM TO THE TEXAS DEPARTMENT OF STATE HEALTH SERVICES TO C.O.H. CONSTRUCTION PM. THE NOTIFICATION TO THE STATE MUST BE PROVIDED A MINIMUM OF 10 DAYS PRIOR TO THE STARTUP OF ANY DEMOLITION ACTIVITIES AT THE SITE.
14. CONTRACTOR SHALL OBTAIN CITY OF HOUSTON DEMOLITION PERMIT (SEE FORM CE 1075 REV. 01/01/2015 FOR GUIDELINES) OR SUBMIT PROOF OF NON-APPLICABILITY TO C.O.H. CONSTRUCTION PROJECT MANAGER PRIOR TO THE STARTUP OF DEMOLITION ACTIVITIES AT THE SITE. THE CONTRACTOR SHALL OBTAIN ANY STATE DEMOLITION PERMITS REQUIRED.

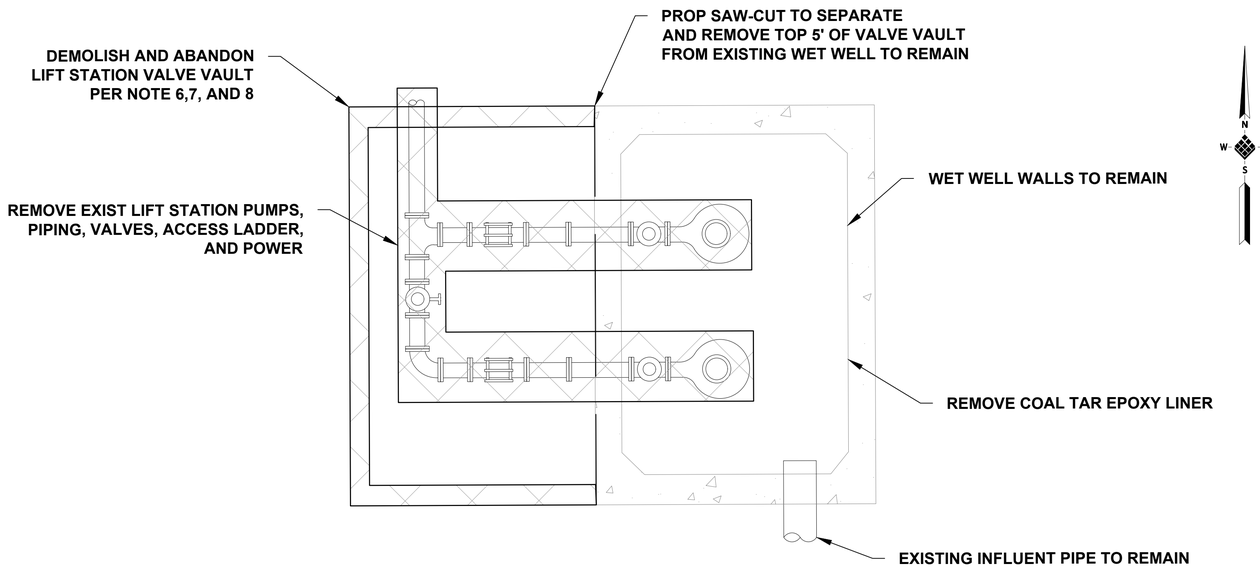

LIFT STATION PLAN

N.T.S.

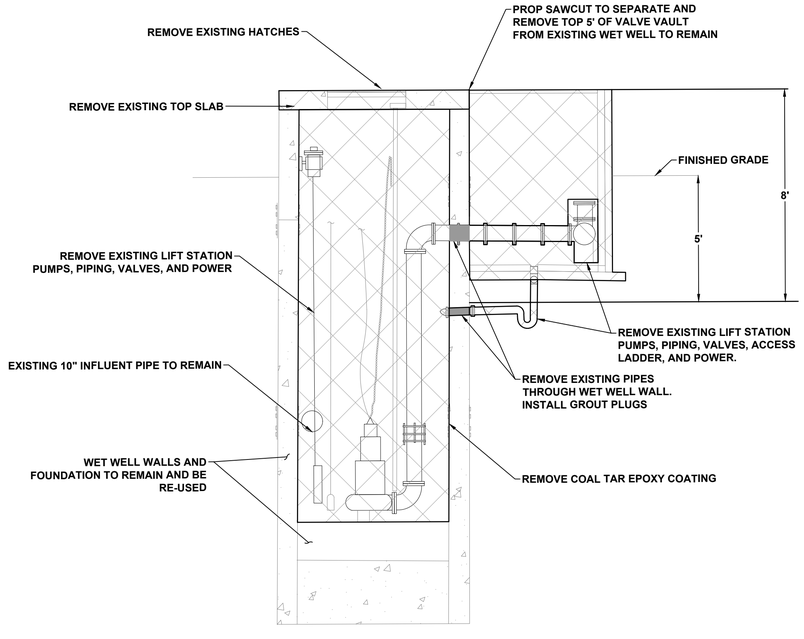

LIFT STATION SECTION

N.T.S.

LEGEND

DEMOLITION AREA

ABANDON VALVE VAULT

NO.	DATE	REVISION	APP.

IDS Engineering Group
13430 NW. Freeway, Suite 700
Houston, Tx. 77040
713.462.3178
TxEng Firm 2726 | TxSurv Firm 10110700

SURVEYED BY: KUO & ASSOCIATES, INC.
TBPE FIRM #F-4578; TBPLS FIRM #1007560

THIS DOCUMENT IS RELEASED FOR THE PURPOSE OF REVIEW UNDER THE AUTHORITY OF MARCEL KHOUW, P.E. 101807 ON 12/17/2025. IT IS NOT TO BE USED FOR CONSTRUCTION PURPOSES.

CITY OF HOUSTON
HOUSTON PUBLIC WORKS

LIFT STATION RENEWAL AND REPLACEMENT FY 2023

MARKET STREET LIFT STATION SECTION DEMOLITION

WBS NUMBER	FOR CITY OF HOUSTON USE ONLY
R-000267-0179-4	
DRAWING SCALE	
HORIZ: AS NOTED VERT: N/A	
CITY OF HOUSTON PM	
NAWARAJ PANTA, P.E.	
SHEET NO. 154 OF 321	

DWG. NO.
MKT-C-03

FILE PATH: \\idseg.com\FS\Projects\0000\005708500 CoH Lift Stations - FY 2023\CAD\DWG\PRODUCTION\154-MARKET ST SECTION DEMO.dwg

PLOTTED: 12/17/2025 10:10 AM

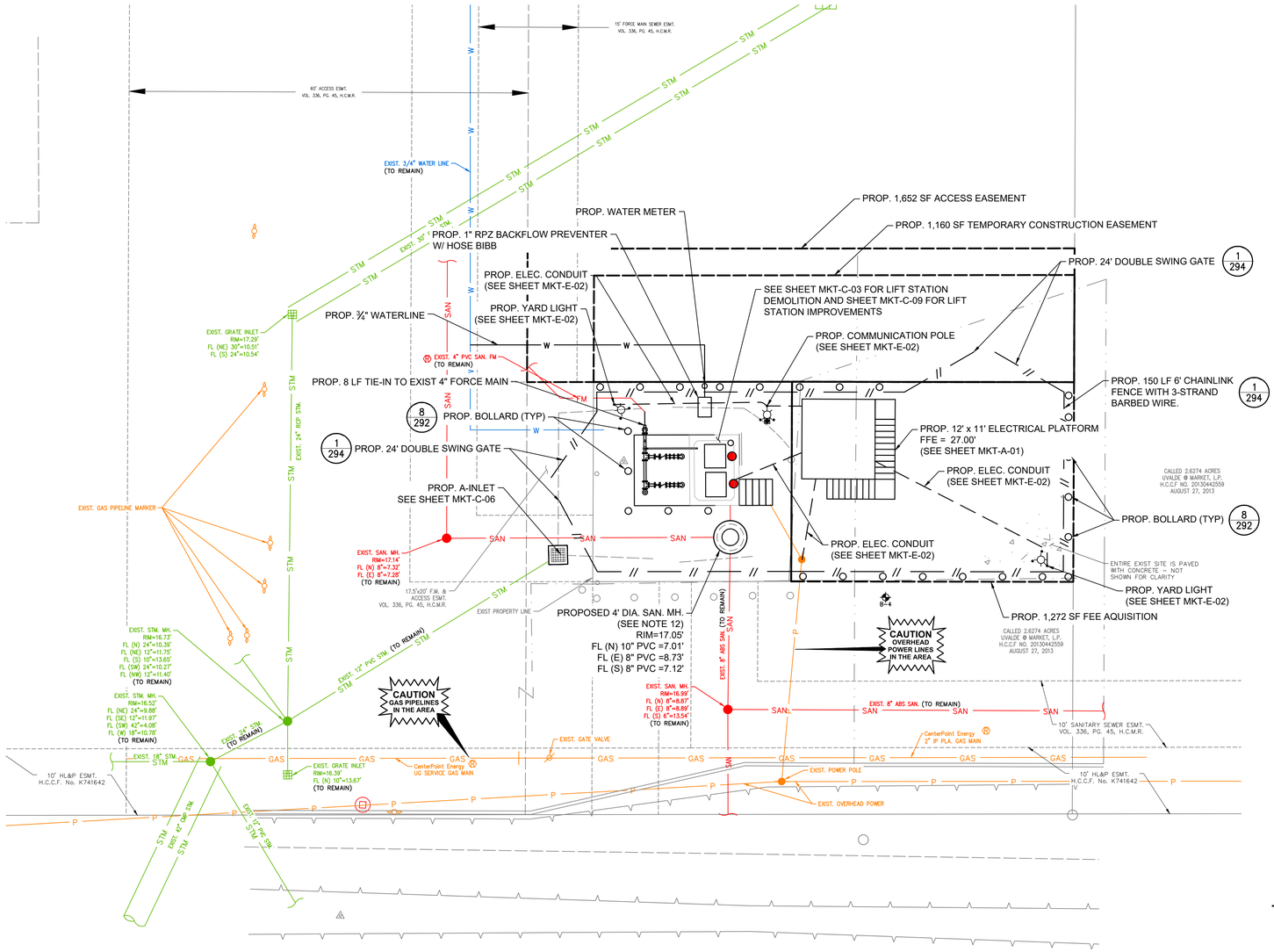

NOTES:

1. EXISTING LIFT STATION WET WELL TO REMAIN.
2. SEE ELECTRICAL PLANS ON SHEETS MKT-E-01-MKT-I-13 FOR ELECTRICAL IMPROVEMENTS.
3. CONTRACTOR SHALL COORDINATE WITH CENTERPOINT ENERGY TO DE-ENERGIZE THE LIFT STATION AND OTHER ELECTRICAL EQUIPMENT ON SITE.
4. NOT USED
5. DOWEL INTO EXISTING PAVEMENT. USE 24" x #4 SMOOTH DOWELS AT 18" CENTER TO CENTER, CENTERED ON SAWCUT.
6. SANITARY SEWER MANHOLES INSTALLED BELOW THE FLOODPLAIN ELEVATION SHALL HAVE WATERTIGHT MANHOLE FRAMES AND COVERS AS PER SPECIFICATION 02090.
7. CONTRACTOR SHALL FIELD VERIFY THE LOCATION OF THE HOLES DRILLED FOR THE RISER PIPE INSTALLATION THRU THE WET VAULT TOP SLAB.
8. REMOVE THE EXISTING FORCE MAIN TO THE NEAREST PIPE JOINT AND TIE PROP FORCE MAIN TO EXIST. USE RESTRAINED JOINTS.
9. THE EXISTING FORCE MAIN IS ASSUMED TO BE DUCTILE IRON BELL AND SPIGOT AND SHALL BE FIELD VERIFIED BY THE CONTRACTOR.
10. CONTRACTOR TO PROTECT EXISTING CONDUIT AND CABLE. IF CABLE OR CONDUIT IS DAMAGED DURING CONSTRUCTION, CONTRACTOR SHALL REPLACE AT NO ADDITIONAL COST TO THE CITY.
11. YARD LIGHT POLES, ELECTRICAL & COMMUNICATION POLES, AND SERVICE POLES SHALL BE ABLE TO WITHSTAND ULTIMATE DESIGN WIND SPEED OF 130 MPH, V(ULT).
12. COAT MANHOLE IN ACCORDANCE WITH SYSTEM 108 PER SPEC SECTION 09901 PART 2.03J.
13. ACCESS TO THE HOME DEPOT SHIPPING BAY LOCATED WEST OF THE SITE SHALL BE MAINTAINED THROUGHOUT CONSTRUCTION.
14. CONTRACTOR TO SAWCUT, REMOVE, AND REPLACE CONCRETE AS NECESSARY. NO SEPARATE PAY.
15. SAWCUT AND REMOVE CONCRETE PAVEMENT AND INSTALL FOUNDATION AS SHOWN ON STRUCTURAL DRAWINGS. (MKT-S-06)

10' 0' 10'
SCALE
1"=10'

N
W E
S

BENCHMARK:

FLOODPLAIN REFERENCE MARK NUMBER 150010 IS A BRASS DISC IN CONCRETE STAMPED 150010, LOCATED ON THE NORTHWEST CORNER OF MARKET STREET BRIDGE APPROXIMATELY 0.20 MILES SOUTHWEST FROM THE INTERSECTION OF IH 10 IN KEY MAP 497J IN GREENS BAYOU WATERSHED.

ELEV. 30.07 FEET NAVD 1988, 2001 ADJUSTMENT

FLOODPLAIN NOTE:

FLOODPLAIN REFERENCE MARK NUMBER 150010 IS A BRASS DISC IN CONCRETE LOCATED ON THE WEST SIDE OF BRIDGE ALONG MARKET ST. AT GREENS BAYOU.

ELEV. 30.07 FEET NAVD 1988, 2001 ADJUSTMENT
100-YR ELEV. 18.50'
500-YR ELEV. 23.00'
FIRM PANEL: 48201C0720M

EXISTING UTILITY NOTE:

EXISTING UNDERGROUND UTILITY INFORMATION (TYPE, SIZE & OWNERSHIP) ARE SHOWN APPROXIMATELY BASED ON THE AVAILABLE RECORD DRAWINGS AND FIELD VERIFICATION (WHERE FEASIBLE) WITHOUT PROBING AND EXCAVATION. NO WARRANTY IS MADE AS TO THE ACCURACY OR COMPLETENESS OF UTILITY LOCATION SHOWN ON THE DRAWING. CAUTION SHOULD BE EXERCISED WHEN EXCAVATING OR BORE AND JACKING IN THE VICINITY OF UNDERGROUND UTILITIES. OWNERS OF THE UTILITIES SHOULD BE NOTIFIED PRIOR TO SUCH ACTIVITIES. CALL UTILITY COORDINATING COMMITTEE AT 713-223-4567, AT LEAST 48 HOURS PRIOR TO EXCAVATING IN THE STREET RIGHT-OF-WAY.

LEGEND

- EXISTING CONCRETE PAVEMENT
- PROP 7" THICK CONCRETE PAVEMENT
- EXISTING CONCRETE SIDEWALK
- PROP 4.5" THICK CONCRETE SIDEWALK
- PROP 5" THICK CONCRETE PAVEMENT
- SAW-CUT CONCRETE
- DETAIL NO. / SHEET NO.

NO.	DATE	REVISION	APP.

NOTICE:
FOR YOUR SAFETY, YOU ARE REQUIRED BY TEXAS LAW TO CALL 811 AT LEAST 48 HOURS BEFORE YOU DIG SO THAT UNDERGROUND LINES CAN BE MARKED. THIS SIGNATURE DOES NOT FULFILL YOUR OBLIGATION TO CALL 811

VERIFICATION OF PRIVATE UTILITY LINES

Date

CenterPoint Energy natural gas utilities shown. (Gas service lines are not shown). This signature not be used for conflict verification.
Signature valid for six months.

Date

CenterPoint Energy/UNDERGROUND Electrical Facilities Verification ONLY. (This signature verifies existing underground facilities – not to be used for conflict verification)
Signature valid for six months.

Date

Approved for AT&T underground conduit facilities only.
Signature valid for one year.

IDS Engineering Group
13430 NW. Freeway, Suite 700
Houston, Tx. 77040
713.462.3178
TxEng Firm 2726 | TxSurv Firm 10110700

SURVEYED BY: KUO & ASSOCIATES, INC.
TBPE FIRM #F-4578; TBPLS FIRM #1007560

THIS DOCUMENT IS RELEASED FOR THE PURPOSE OF REVIEW UNDER THE AUTHORITY OF MARCEL KHOUW, P.E. 101807 ON 12/17/2025. IT IS NOT TO BE USED FOR CONSTRUCTION PURPOSES.

CITY OF HOUSTON
HOUSTON PUBLIC WORKS

LIFT STATION RENEWAL AND REPLACEMENT FY 2023

MARKET STREET LIFT STATION PROPOSED SITE PLAN

WBS NUMBER	FOR CITY OF HOUSTON USE ONLY
R-000267-0179-4	
DRAWING SCALE	
HORIZ: 1" = 10' VERT: N/A	
CITY OF HOUSTON PM	
NAWARAJ PANTA, P.E.	
SHEET NO. 155 OF 321	

DWG. NO. MKT-C-04

FILE PATH: \\Idseg.com\FS\Projects\0000\005708500 CoH Lift Stations - FY 2023\CAD\DWG\PRODUCTION\155-MARKET ST PROP SITE PLAN.dwg

PLOTTED: 12/17/2025 8:18 AM

FILE PATH: \\\dseg.com\FS\Projects\0000\005708500 CoH Lift Stations - FY 2023\CAD\DWG\PRODUCTION\156-MARKET ST GRADING.dwg

STORMWATER DETENTION CALCULATIONS
- GROSS AREA 0.0680 AC
- PROP. IMPERVIOUS AREA 0.0011 AC
- STORAGE RATE 0.7500 AC-FT/AC
- STORAGE REQUIRED 0.0008 AC-FT

DETENTION CREDIT
- EXIST. IMPERVIOUS AREA REMOVED 0.0011 AC
- DETENTION CREDIT RATE 0.4000 AC-FT/AC
- DETENTION CREDIT VOLUME 0.0004 AC-FT

MITIGATION CALCULATIONS
VOLUME OF FILL = 34 FT^3 (PROP STAIRS)
V_F=0.0008 AC-FT
- VOLUME OF CUT = 34 FT^3 (DEMO OF EXIST STAIRS)
V_C=0.0008 AC-FT
- VOLUME REQUIRED
V_F-V_C = 0.0008 - 0.0008 = 0.0000 AC-FT

TOTAL DETENTION
- REQUIRED = 0.0008 AC-FT - 0.0004 AC-FT + 0.0000 AC-FT = 0.0004 AC-FT
- PROVIDED = 0.0004 AC-FT

NOTES:

1. RESPONSIBILITY FOR MAINTENANCE OF THE DETENTION FACILITY WILL BE BY THE PROPERTY OWNER.
2. SUBSURFACE DRAINAGE SYSTEMS ARE REQUIRED TO BE DRAINED IN 48 HOURS.
3. OFFSITE FLOW IS UNAFFECTED BY THE PROPOSED LIFT STATION STRUCTURE AND CONCRETE PAVING.
4. DRAINAGE AREA EXTENDS BEYOND THE LIMITS OF THIS SHEET.
5. CONTRACTOR TO SAW-CUT, REMOVE, AND REPLACE CONCRETE AS NECESSARY. NO SEPARATE PAY.
6. SAW-CUT AND REMOVE CONCRETE PAVEMENT AND INSTALL FOUNDATION AS SHOWN ON STRUCTURAL DRAWINGS (MKT-S-06).

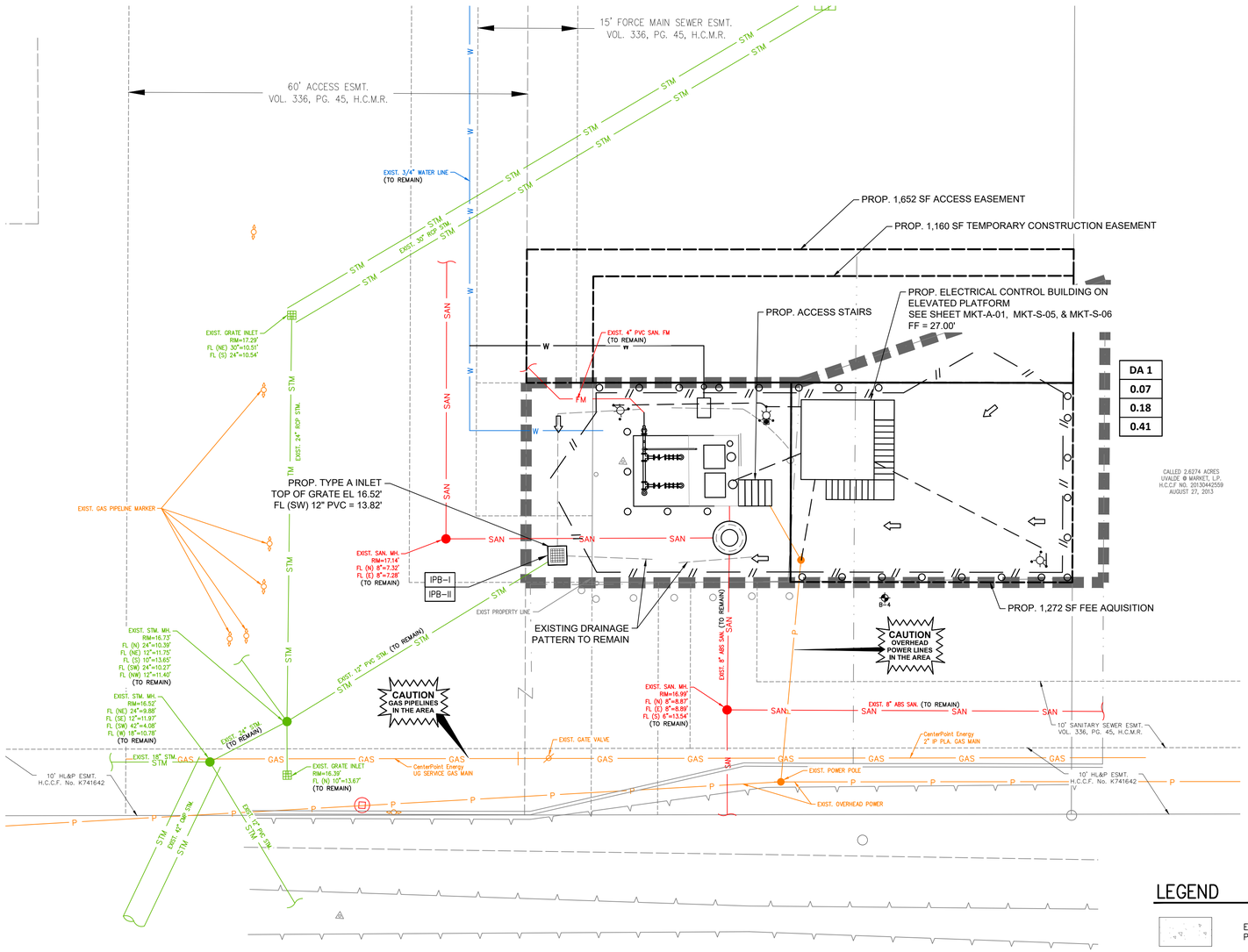

LEGEND

- EXISTING CONCRETE PAVEMENT
- PROP. 7" THICK CONCRETE PAVEMENT
- EXISTING CONCRETE SIDEWALK
- PROP. 4.5" THICK CONCRETE SIDEWALK
- PROP. 7" THICK REPAIR CONCRETE PAVEMENT
- ON-SITE SHEET FLOW DIRECTION
- OFFSITE SHEET FLOW DIRECTION (SEE NOTE XX)
- 76 EXISTING CONTOUR
- IPB-I INLET PROTECTION BARRIER-STAGE I
- IPB-II INLET PROTECTION BARRIER-STAGE II
- DRAINAGE AREA BOUNDARY
- XX DRAINAGE AREA NO.
- X.XX ACRES
- X.XX 2-YR FLOW (CFS)
- X.XX 100-YR FLOW (CFS)
- # DETAIL NO. / DRAWING NO.
- SAW-CUT CONCRETE

10' 0' 10'
SCALE
1" = 10'

N W E S

BENCHMARK:

FLOODPLAIN REFERENCE MARK NUMBER 150010 IS A BRASS DISC IN CONCRETE STAMPED 150010, LOCATED ON THE NORTHWEST CORNER OF MARKET STREET BRIDGE APPROXIMATELY 0.20 MILES SOUTHWEST FROM THE INTERSECTION OF IH 10 IN KEY MAP 497J IN GREENS BAYOU WATERSHED.

ELEV. 30.07 FEET NAVD 1988, 2001 ADJUSTMENT

FLOODPLAIN NOTE:

FLOODPLAIN REFERENCE MARK NUMBER 150010 IS A BRASS DISC IN CONCRETE LOCATED ON THE WEST SIDE OF BRIDGE ALONG MARKET ST. AT GREENS BAYOU.

ELEV. 30.07 FEET NAVD 1988, 2001 ADJUSTMENT
100-YR ELEV. 18.50'
500-YR ELEV. 23.00'
FIRM PANEL: 48201C0720M

EXISTING UTILITY NOTE:

EXISTING UNDERGROUND UTILITY INFORMATION (TYPE, SIZE & OWNERSHIP) ARE SHOWN APPROXIMATELY BASED ON THE AVAILABLE RECORD DRAWINGS AND FIELD VERIFICATION (WHERE FEASIBLE) WITHOUT PROBING AND EXCAVATION. NO WARRANTY IS MADE AS TO THE ACCURACY OR COMPLETENESS OF UTILITY LOCATION SHOWN ON THE DRAWING. CAUTION SHOULD BE EXERCISED WHEN EXCAVATING OR BORE AND JACKING IN THE VICINITY OF UNDERGROUND UTILITIES. OWNERS OF THE UTILITIES SHOULD BE NOTIFIED PRIOR TO SUCH ACTIVITIES. CALL UTILITY COORDINATING COMMITTEE AT 713-223-4567, AT LEAST 48 HOURS PRIOR TO EXCAVATING IN THE STREET RIGHT-OF-WAY.

NO.	DATE	REVISION	APP.

NOTICE:
FOR YOUR SAFETY, YOU ARE REQUIRED BY TEXAS LAW TO CALL 811 AT LEAST 48 HOURS BEFORE YOU DIG SO THAT UNDERGROUND LINES CAN BE MARKED. THIS SIGNATURE DOES NOT FULFILL YOUR OBLIGATION TO CALL 811

VERIFICATION OF PRIVATE UTILITY LINES

Date

CenterPoint Energy natural gas utilities shown. (Gas service lines are not shown). This signature not be used for conflict verification.

Signature valid for six months.

Date

CenterPoint Energy/UNDERGROUND Electrical Facilities Verification ONLY. (This signature verifies existing underground facilities – not to be used for conflict verification)

Signature valid for six months.

Date

Approved for AT&T underground conduit facilities only.
Signature valid for one year.

IDS Engineering Group
13430 NW. Freeway, Suite 700
Houston, Tx. 77040
713.462.3178
TxEng Firm 2726 | TxSurv Firm 10110700

SURVEYED BY: KUO & ASSOCIATES, INC.
TBPE FIRM #F-4578; TBPLS FIRM #1007560

THIS DOCUMENT IS RELEASED FOR THE PURPOSE OF REVIEW UNDER THE AUTHORITY OF MARCEL KHOUW, P.E. 101807 ON 12/17/2025. IT IS NOT TO BE USED FOR CONSTRUCTION PURPOSES.

CITY OF HOUSTON
HOUSTON PUBLIC WORKS

LIFT STATION RENEWAL AND REPLACEMENT FY 2023

MARKET STREET GRADING AND DRAINAGE PLAN

WBS NUMBER	FOR CITY OF HOUSTON USE ONLY
R-000267-0179-4	
DRAWING SCALE	
HORIZ: VALUE VERT: N/A	
CITY OF HOUSTON PM	
NAWARAJ PANTA, P.E.	
DWG. NO. MKT-C-06	SHEET NO. 156 OF 321

PLOTTED: 12/17/2025 8:18 AM

STORM SEWER CALCULATIONS

IDS ENGINEERING GROUP

CLIENT NAME: **CITY OF HOUSTON**
PROJECT NAME: **WBS NO. R-000267-0179-3 - LOCKWOOD LIFT STATION**
IDS JOB NO: **0057-085-00**
DATE PRINTED: December 9, 2025
DATE REVISED: December 8, 2025 BY: CM

SELECT STORM EVENT FREQUENCY: 2 year
SELECT APPROPRIATE LAND USE: Light Industrial
ENTER DESIGN CURB HEIGHT (inches): 0

Re-Generate Formulas

Line	Manhole or Inlet Number U / S	D / S	Reach Length (feet)	Diameter or Rise (inches)	Span (inches)	No. of Barrels	Pipe Material	Pipe Grade Minimum (%)	Pipe Grade Actual (%)	Area (acres)	Sum of Area (acres)	Runoff Coeff.	Sum of C x Area (acres)	Travel Time (minutes)	Time of Concentration (minutes)	Intensity (in./hr.)	Sum of Flows (cfs)	Design Flow (cfs)	Design Velocity (fps)	Actual Velocity (fps)	Hydraulic Gradient (%)	Change in Head (feet)	Upstream Top of Grate (feet)	Hydraulic Grade Upstream (feet)	Hydraulic Grade Downstream (feet)	Manhole Drop (D/S) (feet)	Pipe Flowline Upstream (feet)	Pipe Flowline Downstream (feet)	Depth from Gutter to HGL (feet)	Depth of Cover (feet)	Upstream NG Elev. (feet)	Depth from NG to HGL (feet)
1	A INLET	STM. MH	50.56	12		1	RCP	0.440%	4.094%	0.07	0.07	0.65	0.04	3.66	21.2	4.09	0.18	7.21	9.18	0.23	0.003%	0.00	16.52	12.75	12.75	0.00	***13.82***	11.75	3.77	1.70	16.52	3.77

NOTES:
1. This spreadsheet has been developed using the City of Houston criteria outlined in the November 2023 Infrastructure Design Manual. The Rational Method has been used to calculate flows, and Manning's Formula for pipes flowing full has been used to calculate velocities.
2. This spreadsheet calculates rainfall intensity using the b, d, and e constants for Harris County and the City of Houston, as outlined in Appendix H of the Harris County Infrastructure Regulations, and Chapter 9 of the November 2023 City of Houston Infrastructure Design Manual.
3. Minimum storm sewer grades and maximum velocities as established in the City of Houston design criteria have been used to establish the grades used in this system.
4. Land Use "SFR" represents Single-Family Residential development. Land Use "MFR" represents Multi-Family Residential development.
5. Design flow and velocity are based entirely on pipe grade and represent the conditior when pipe is flowing full with the hydraulic grade line equal to the pipe grade, and are used to demonstrate that the pipe slopes used in the calculations conform to the City of Houston minimum and maximum standards.

Runoff Coefficient Table	
Land Use	C
SFR (> ½ ac. lots)	0.35
SFR (¼ - ½ ac. lots)	0.45
SFR (< ¼ ac. lots)	0.55
MFR (< 20 d.u./ac.)	0.65
MFR (>= 20 d.u./ac.)	0.80
Business Districts	0.80
Light Industrial	0.65
Heavy Industrial	0.75
Railroad Yard Areas	0.30
Parks/Open Areas	0.18
Land Use Varies	ENTER

Pipe Material	Mannings "n" Value	Pipe Description
CLAY	0.012	Extra Strength Vitrified Clay Pipe
CMP	0.024	Corrugated Metal Pipe
CMPSI	0.013	CMP w/ Smooth Interior
HDPE	0.013	High Density Polyethylene Pipe
PVC	0.013	Polyvinyl Chloride Pipe
RCA	0.013	Reinforced Concrete Arch Pipe
RCB	0.015	Reinforced Concrete Box Culvert
RCE	0.013	Reinforced Concrete Elliptical Pipe
RCP	0.013	Reinforced Concrete Pipe

Rainfall Freq. (yrs)	b	d	e
2 year	***48.35***	***9.07***	***0.7244***
5 year	52.32	7.88	0.6900
10 year	54.68	6.96	0.6623
25 year	57.79	5.89	0.6294
50 year	61.00	5.46	0.6096
100 year	60.66	4.44	0.5797
500 year	62.17	2.95	0.5196

Master Spreadsheet - Storm Sewer Calculations Updated 02/10/2025
\\idseg.com\FS\Projects\0000\005708500 CoH Lift Stations - FY 2023\Eng\Calcs\Drainage\[4. Market St. #2 Drainage Calcs.xlsx]CALCULATIONS

STORM SEWER CALCULATIONS

IDS ENGINEERING GROUP

CLIENT NAME: **CITY OF HOUSTON**
PROJECT NAME: **WBS NO. R-000267-0179-3 - LOCKWOOD LIFT STATION**
IDS JOB NO: **0057-085-00**
DATE PRINTED: December 9, 2025
DATE REVISED: December 8, 2025 BY: CM

SELECT STORM EVENT FREQUENCY: 100 year
SELECT APPROPRIATE LAND USE: Light Industrial
ENTER DESIGN CURB HEIGHT (inches): 0

Re-Generate Formulas

Line	Manhole or Inlet Number U / S	D / S	Reach Length (feet)	Diameter or Rise (inches)	Span (inches)	No. of Barrels	Pipe Material	Pipe Grade Minimum (%)	Pipe Grade Actual (%)	Area (acres)	Sum of Area (acres)	Runoff Coeff.	Sum of C x Area (acres)	Travel Time (minutes)	Time of Concentration (minutes)	Intensity (in./hr.)	Sum of Flows (cfs)	Design Flow (cfs)	Design Velocity (fps)	Actual Velocity (fps)	Hydraulic Gradient (%)	Change in Head (feet)	Upstream Top of Grate (feet)	Hydraulic Grade Upstream (feet)	Hydraulic Grade Downstream (feet)	Manhole Drop (D/S) (feet)	Pipe Flowline Upstream (feet)	Pipe Flowline Downstream (feet)	Depth from Gutter to HGL (feet)	Depth of Cover (feet)	Upstream NG Elev. (feet)	Depth from NG to HGL (feet)
1	A INLET	STM. MH	50.56	12		1	RCP	0.440%	4.094%	0.07	0.07	0.65	0.04	1.62	21.2	9.24	0.41	7.21	9.18	0.52	0.013%	0.01	16.52	12.76	12.75	0.00	***13.82***	11.75	3.76	1.70	16.52	3.76

NOTES:
1. This spreadsheet has been developed using the City of Houston criteria outlined in the November 2023 Infrastructure Design Manual. The Rational Method has been used to calculate flows, and Manning's Formula for pipes flowing full has been used to calculate velocities.
2. This spreadsheet calculates rainfall intensity using the b, d, and e constants for Harris County and the City of Houston, as outlined in Appendix H of the Harris County Infrastructure Regulations, and Chapter 9 of the November 2023 City of Houston Infrastructure Design Manual.
3. Minimum storm sewer grades and maximum velocities as established in the City of Houston design criteria have been used to establish the grades used in this system.
4. Land Use "SFR" represents Single-Family Residential development. Land Use "MFR" represents Multi-Family Residential development.
5. Design flow and velocity are based entirely on pipe grade and represent the conditior when pipe is flowing full with the hydraulic grade line equal to the pipe grade, and are used to demonstrate that the pipe slopes used in the calculations conform to the City of Houston minimum and maximum standards.

Runoff Coefficient Table	
Land Use	C
SFR (> ½ ac. lots)	0.35
SFR (¼ - ½ ac. lots)	0.45
SFR (< ¼ ac. lots)	0.55
MFR (< 20 d.u./ac.)	0.65
MFR (>= 20 d.u./ac.)	0.80
Business Districts	0.80
Light Industrial	0.65
Heavy Industrial	0.75
Railroad Yard Areas	0.30
Parks/Open Areas	0.18
Land Use Varies	ENTER

Pipe Material	Mannings "n" Value	Pipe Description
CLAY	0.012	Extra Strength Vitrified Clay Pipe
CMP	0.024	Corrugated Metal Pipe
CMPSI	0.013	CMP w/ Smooth Interior
HDPE	0.013	High Density Polyethylene Pipe
PVC	0.013	Polyvinyl Chloride Pipe
RCA	0.013	Reinforced Concrete Arch Pipe
RCB	0.015	Reinforced Concrete Box Culvert
RCE	0.013	Reinforced Concrete Elliptical Pipe
RCP	0.013	Reinforced Concrete Pipe

Rainfall Freq. (yrs)	b	d	e
2 year	48.35	9.07	0.7244
5 year	52.32	7.88	0.6900
10 year	54.68	6.96	0.6623
25 year	57.79	5.89	0.6294
50 year	61.00	5.46	0.6096
100 year	***60.66***	***4.44***	***0.5797***
500 year	62.17	2.95	0.5196

Master Spreadsheet - Storm Sewer Calculations Updated 02/10/2025
\\idseg.com\FS\Projects\0000\005708500 CoH Lift Stations - FY 2023\Eng\Calcs\Drainage\[4. Market St. #2 Drainage Calcs.xlsx]CALCULATIONS

NO.	DATE	REVISION	APP.

IDS Engineering Group
13430 NW. Freeway, Suite 700
Houston, Tx. 77040
713.462.3178
TxEng Firm 2726 | TxSurv Firm 10110700

SURVEYED BY: KUO & ASSOCIATES, INC.
TBPE FIRM #F-4578; TBPLS FIRM #1007560

THIS DOCUMENT IS RELEASED FOR THE PURPOSE OF REVIEW UNDER THE AUTHORITY OF MARCEL KHOUW, P.E. 101807 ON 12/17/2025. IT IS NOT TO BE USED FOR CONSTRUCTION PURPOSES.

CITY OF HOUSTON
HOUSTON PUBLIC WORKS

LIFT STATION RENEWAL AND REPLACEMENT FY 2023

MARKET STREET DRAINAGE CALCULATIONS

WBS NUMBER	FOR CITY OF HOUSTON USE ONLY
R-000267-0179-4	
DRAWING SCALE	
HORIZ: VALUE VERT: N/A	
CITY OF HOUSTON PM	
NAWARAJ PANTA, P.E.	
DWG. NO. MKT-C-07	SHEET NO. 157 OF 321

FILE PATH: \\idseg.com\FS\Projects\0000\005708500 CoH Lift Stations - FY 2023\CAD\DWG\PRODUCTION\157-MARKET ST CALCULATIONS.dwg

PLOTTED: 12/17/2025 8:18 AM

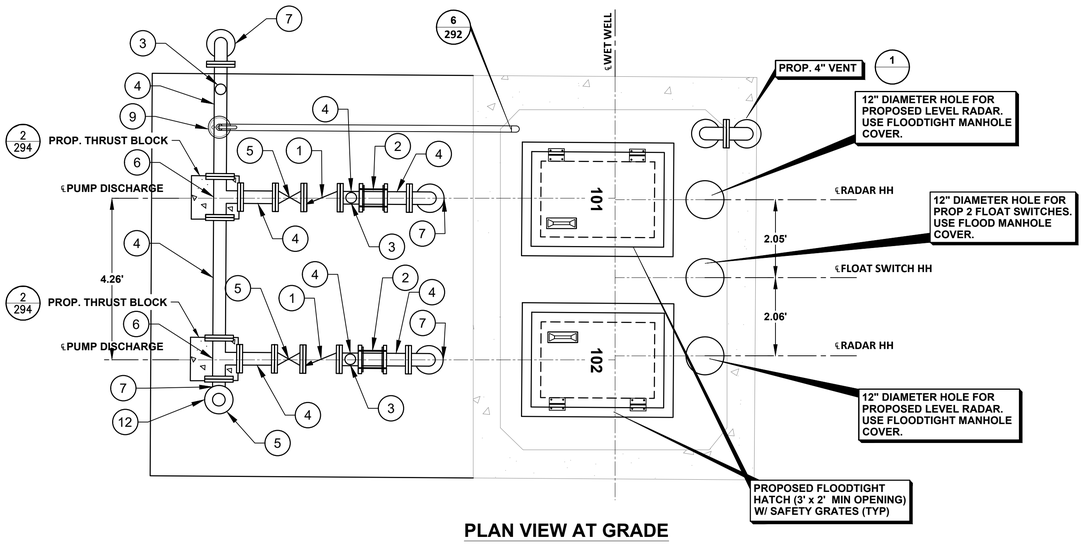

PLAN VIEW AT GRADE

SCALE: 1" = 2'

KEYED NOTE	ITEM	QTY
1	CHECK VALVE (4")	2
2	FLEXIBLE COUPLING (4")	3
3	PRESSURE GAUGE ASSEMBLY	1
4	SPOOL PIECE (4")	18
5	PLUG VALVE (4")	2
6	TEE (4" x 4")	1
7	90° ELBOW (4")	8
8	316 STAINLESS STEEL SUPPORT	6
9	2" AIR RELEASE & VACUUM VALVE ASSEMBLY	1
10	ADJUSTABLE PIPE SUPPORT	4
11	ECCENTRIC REDUCER (4"x3")	2
12	BLIND FLANGE (4")	1

NOTES:

1. ABRASIVE BLAST AND COAT ALL PIPING AND FITTINGS NOT BEING REPLACED IN WET WELL.
2. CONTRACTOR TO VERIFY DIMENSIONS REQUIRED TO INSTALL AND OPERATE VALVES.
3. EXISTING LIFT STATION WET WELL STRUCTURE TO REMAIN.
4. UV PROTECTIVE COATINGS ARE REQUIRED BY THE CITY OF HOUSTON ON ALL VENT PIPES.
5. LABEL HATCHES WITH THE CORRESPONDING PUMP NUMBER USING A 12–INCH BY 6–INCH ALUMINUM PLATE ENGRAVED WITH 1.5–INCH LETTERING WELDED TO THE HATCH.
6. CONTRACTOR TO CONFIRM SIZE AND LOCATION OF THE WET WELL HATCHES PER HATCH AND PUMP MANUFACTURER REQUIREMENTS.
7. PUMP AND ANCHOR BOLTS ARE TO BE ADHESIVE TYPE, AND EMBEDDED IN THE CONCRETE LAB. CONTRACTOR TO SUBMIT DESIGN OF PUMP ANCHOR BOLTS AND PATTEN, INCLUDING CALCULATIONS, DURING SHOP DRAWING SUBMISSION.
8. ALL PIPING IN THE WET WELL SHALL BE FLANGED. NO FLANGED COUPLING ADAPTORS, OR VICTAULIC STYLE COUPLINGS SHALL BE PERMITTED INSIDE OF THE WET WELL.
9. ACCESS HATCHES SHALL BE FOREST GREEN. SAFETY GRATING SHALL BE FURNISHED WITH SAFETY ORANGE POWDER COAT FINISH.

NO.	DATE	REVISION	APP.

LEGEND

- DETAIL NO. / SHEET NO.
- EXISTING CONCRETE
- PROPOSED CONCRETE

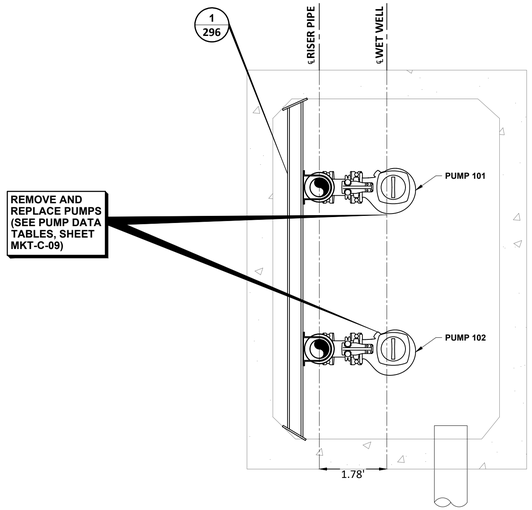

SECTION A-A VIEW A

1" = 2'

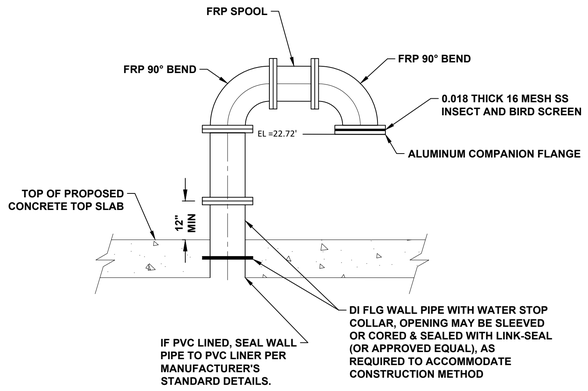

PROPOSED STRUCTURE PENETRATION 1

N.T.S.

IDS Engineering Group
13430 NW. Freeway, Suite 700
Houston, Tx. 77040
713.462.3178
TxEng Firm 2726 | TxSurv Firm 10110700

SURVEYED BY: KUO & ASSOCIATES, INC.
TBPE FIRM #F-4578; TBPLS FIRM #1007560

THIS DOCUMENT IS RELEASED FOR THE PURPOSE OF REVIEW UNDER THE AUTHORITY OF MARCEL KHOUW, P.E. 101807 ON 12/17/2025. IT IS NOT TO BE USED FOR CONSTRUCTION PURPOSES.

CITY OF HOUSTON
HOUSTON PUBLIC WORKS

LIFT STATION RENEWAL AND REPLACEMENT FY 2023

MARKET STREET LIFT STATION PLAN AT GRADE AND BASE

WBS NUMBER	FOR CITY OF HOUSTON USE ONLY
R–000267–0179–4	
DRAWING SCALE	
HORIZ: AS NOTED VERT: N/A	
CITY OF HOUSTON PM	
NAWARAJ PANTA, P.E.	
SHEET NO. 158 OF 321	

DWG. NO. MKT–C–08

FILE PATH: \\idseg.com\FS\Projects\0000\005708500 CoH Lift Stations – FY 2023\CAD\DWG\PRODUCTION\158–MARKET ST PLAN AT GRADE.dwg

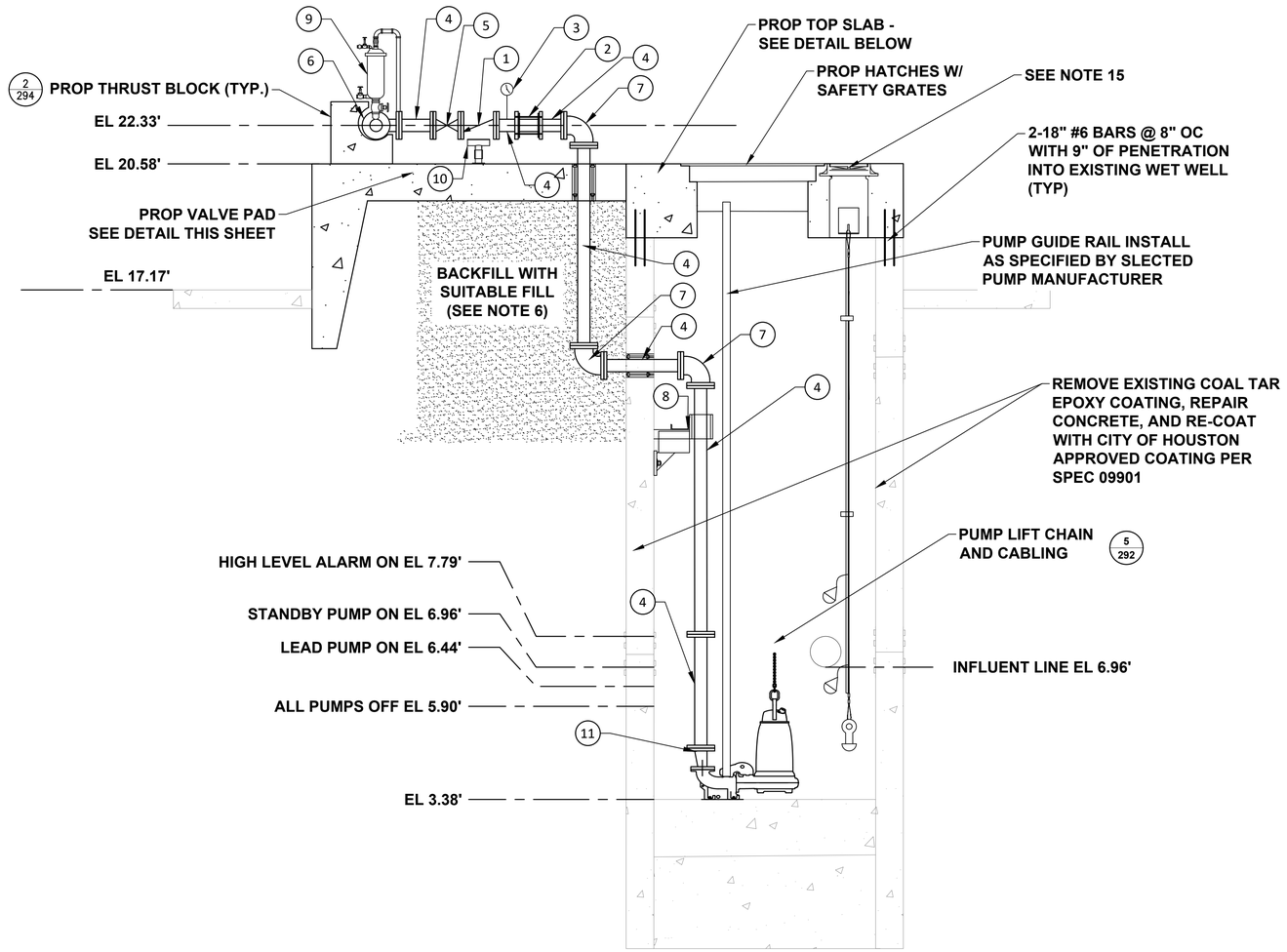

SECTIONAL ELEVATION A

SCALE: 1" = 2'

STATION OPERATING TABLES		
PROPOSED CONDITION - 0.21 MGD		
RISING WATER LEVEL		
WATER LEVEL ELEVATION	ACTION	PUMP(S) IN OPERATION
5.90	PUMPS OFF LEVEL - NO ACTION	ALL PUMPS ARE OFF
6.44	LEAD PUMP TURNS ON	LEAD PUMP ON
6.96	STANDBY PUMP TURNS ON	LEAD AND STANDBY PUMP ON
7.79	HIGH WATER ALARM ON	HIGH WATER ALARM SOUND
FALLING WATER LEVEL		
WATER LEVEL ELEVATION	ACTION	PUMP(S) IN OPERATION
7.79	HIGH WATER ALARM ON	HIGH WATER ALARM SOUND
6.96	HIGH WATER LEVEL ALARM OFF	LEAD AND STANDBY PUMP ON
6.44	LEAD PUMP TURNS OFF	STANDBY PUMP ON
5.90	STANDBY PUMP TURNS OFF	ALL PUMPS STOPPED - STANDBY PUMP SWITCHES TO LEAD PUMP PUMP ON

PUMP DATA TABLE*

PUMP CHARACTERISTICS	PUMP NO. 1	PUMP NO. 2
MOTOR DATA		
NOMIMAL SIZE (HP)	5.5	5.5
MAX SPEED (RPM)	2611	2611
SOLIDS PASSAGE		
MINIMUM SPHERE (IN)	3	3
CAPACITY (GPM)		
DESIGN	150	150
RUNOUT	520	520
Actual Cumulative Flow	148	
DISCHARGE HEAD (FT)		
DESIGN	54.22	54.22
RUNOUT	9	9
SHUT OFF	84.1	84.1
EFFICIENCY (%)		
DESIGN	52.9	52.9
NPSHR (FT)		
DESIGN	8.6	8.6

*FLYGT Concertor 6020 N80 used for all pump calculations.

KEYED NOTE	ITEM	QTY
1	CHECK VALVE (4")	2
2	FLEXIBLE COUPLING (4")	3
3	PRESSURE GAUGE ASSEMBLY	1
4	SPOOL PIECE (4")	18
5	PLUG VALVE (4")	2
6	TEE (4" x 4")	1
7	90° ELBOW (4")	8
8	316 STAINLESS STEEL SUPPORT	6
9	2" AIR RELEASE & VACUUM VALVE ASSEMBLY	1
10	ADJUSTABLE PIPE SUPPORT	4
11	ECCENTRIC REDUCER (4"x3")	2
12	BLIND FLANGE (4")	1

LEGEND

- # / # — DETAIL NO. / SHEET NO.
- EXISTING CONCRETE
- PROPOSED CONCRETE
- REMOVE AND REPLACE CONCRETE AS PER DETAIL 11, SHEET XX.
- PROP. FLOWABLE FILL

NOTES:

1. ABRASIVE BLAST AND COAT ALL PIPING AND FITTINGS NOT BEING REPLACED IN WET WELL.
2. CONTRACTOR TO VERIFY DIMENSIONS REQUIRED TO INSTALL AND OPERATE VALVES.
3. EXISTING LIFT STATION WET WELL STRUCTURE TO REMAIN.
4. UV PROTECTIVE COATINGS ARE REQUIRED BY THE CITY OF HOUSTON ON ALL VENT PIPES.
5. LABEL HATCHES WITH THE CORRESPONDING PUMP NUMBER USING A 12–INCH BY 6–INCH ALUMINUM PLATE ENGRAVED WITH 1.5–INCH LETTERING WELDED TO THE HATCH.
6. FILL VOID LEFT BY REMOVAL OF EXISTING VALVE VAULT WITH SUITABLE FILL.
7. SEE ELECTRICAL PLANS FOR ADDITIONAL IMPROVEMENTS.
8. ABRASIVE BLAST AND COAT TO BE IN ACCORDANCE WITH SYSTEM 108 PER SPEC SECTION 09901 PART 2.03J.
9. CONTRACTOR TO CONFIRM SIZE AND LOCATION OF THE WET WELL HATCHES PER HATCH AND PUMP MANUFACTURER REQUIREMENTS
10. PUMP AND ANCHOR BOLTS ARE THE BE ADHESIVE TYPE, AND EMBEDDED IN THE CONCRETE SLAB. CONTRACTOR TO SUBMIT DESIGN OF PUMP ANCHOR BOLTS AND PATTERN, INCLUDING CALCULATIONS, DURING SHOP DRAWINGS SUBMISSION.
11. ALL PIPING IN THE WET WELL SHALL BE FLANGED. NO FLANGED COUPLING ADAPTORS, OR VICTAULIC STYLE COUPLINGS SHALL BE PERMITTED INSIDE OF THE WET WELL.
12. ACCESS HATCHES SHALL BE FOREST GREEN. SAFETY GRATING SHALL BE FURNISHED WITH SAFETY ORANGE POWDER COAT FINISH.
13. INSTALL PLUG VALVES TO OPEN UPWARD AND TO CLOSE TO A SEATING POSITION.
14. INSTALL CHECK VALVES SO THAT THE WEIGHT LEVER POSITION IS APPROXIMATELY 45 DEGREES BELOW THE VALVE HORIZONTAL CENTER LINE IN THE CLOSE POSITION AND APPROXIMATELY 45 DEGREES ABOVE THE HORIZONTAL CENTER LINE IN THE FULL OPEN POSITION.
15. PROPOSED FLOAT SWITCH AND LEVEL RADARS SHOWN FOR REFERENCE. REFER TO (MKT–C–08) FOR LOCATION AND SIZE

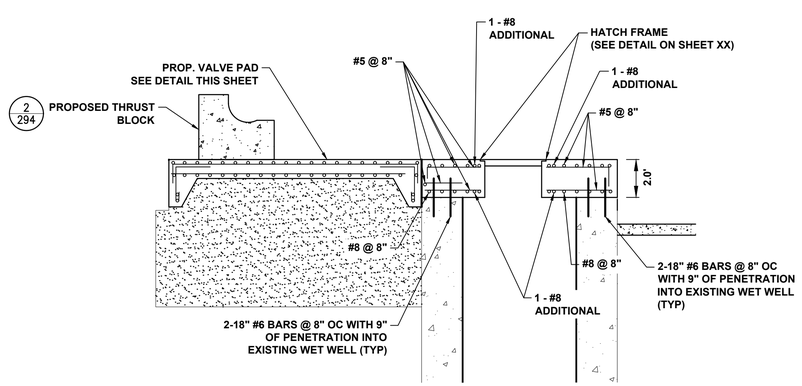

WET WELL TOP SLAB DETAIL

SCALE: 1"=4'

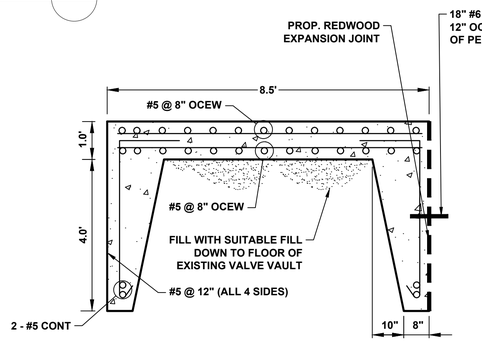

DISCHARGE PIPING CONCRETE SLAB DETAIL

SCALE: 1" = 2'

DESIGN POINT
146 GPM @ 46.51

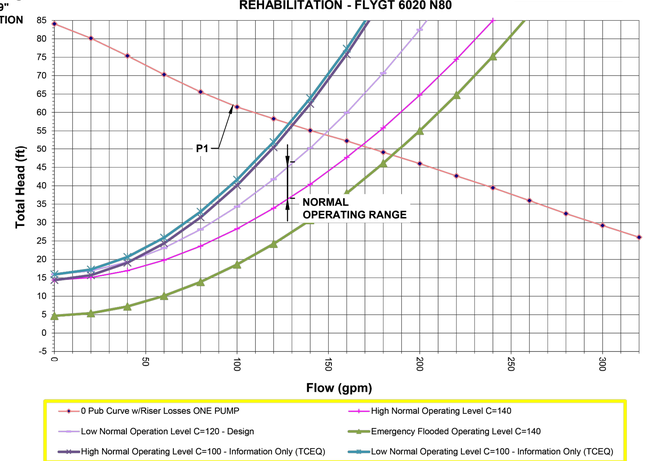

IDS Engineering Group
13430 NW. Freeway, Suite 700
Houston, Tx. 77040
713.462.3178
TxEng Firm 2726 | TxSurv Firm 10110700

SURVEYED BY: KUO & ASSOCIATES, INC.
TBPE FIRM #F–4578; TBPLS FIRM #1007560

THIS DOCUMENT IS RELEASED FOR THE PURPOSE OF REVIEW UNDER THE AUTHORITY OF MARCEL KHOUW, P.E. 101807 ON 12/17/2025. IT IS NOT TO BE USED FOR CONSTRUCTION PURPOSES.

CITY OF HOUSTON

HOUSTON PUBLIC WORKS

LIFT STATION RENEWAL AND REPLACEMENT FY 2023

MARKET STREET LIFT STATION ELEVATION SECTION

WBS NUMBER	FOR CITY OF HOUSTON USE ONLY
R–000267–0179–4	
DRAWING SCALE	
HORIZ: AS NOTED VERT: N/A	
CITY OF HOUSTON PM	
NAWARAJ PANTA, P.E.	
DWG. NO. MKT–C–09	SHEET NO. 159 OF 321

NO.	DATE	REVISION	APP.

PLOTTED: 12/17/2025 8:19 AM
FILE PATH: \\tdseg.com\FS\Projects\0000\005708500 CoH Lift Stations – FY 2023\CAD\DWG\PRODUCTION\159–MARKET ST ELEV SECTION.dwg

PLOTTED: 12/17/2025 8:19 AM

FILE PATH: \\Idseg.com\FS\Projects\0000\005708500 CoH Lift Stations - FY 2023\CAD\DWG\PRODUCTION\160-MARKET ST ELEC PLATFORM.dwg

NO.	DATE	REVISION	APP.

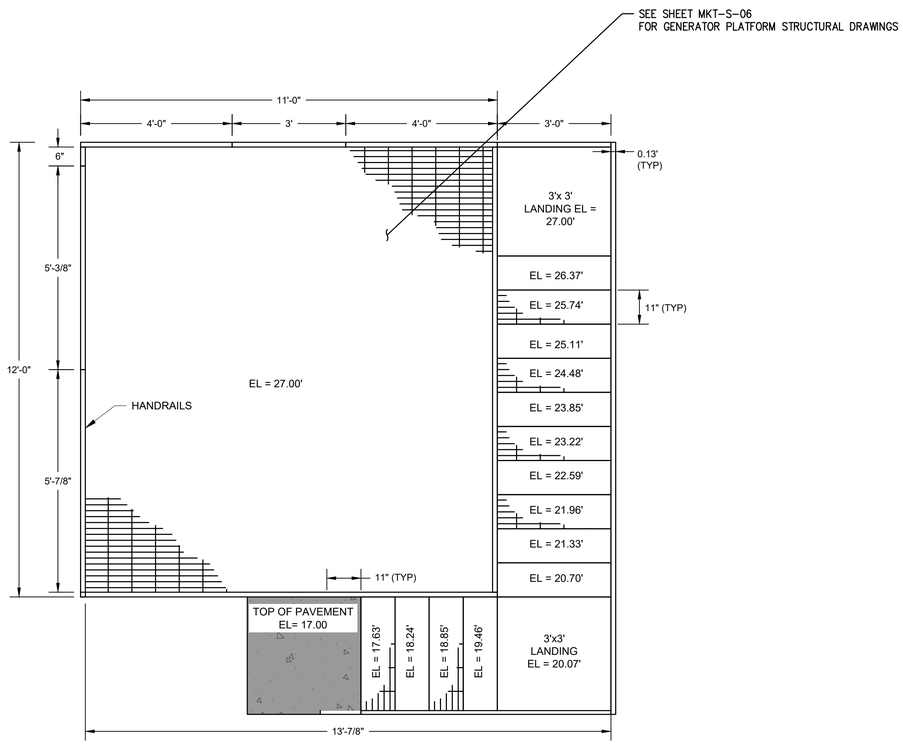

NOTES:

1. CONTRACTOR SHALL SUBMIT SIGNED AND SEALED FABRICATION DRAWINGS BY A PROFESSIONAL ENGINEER OF PLATFORM MEETING THE 2012 INTERNATIONAL BUILDING CODE (AS AMENDED BY THE CITY OF HOUSTON).
2. PLATFORM SHOULD BE DESIGNED TO WITHSTAND LOADS FROM A 500-YEAR EVENT, BASED ON THE FEMA WSEL FOR A 500-YR FLOOD EVENT.
3. PLATFORM GRATING WILL BE ALUMINUM POWDER COATED FOREST GREEN.
4. PLATFORM SHALL BE DESIGNED TO MEET THE ULTIMATE DESIGN WIND SPEED (VULT) OF 139 MPH IN 3 SECOND GUSTS AS REQUIRED FOR RISK CATEGORY II STRUCTURES PER SECTION 1609.3 AND TABLE 1609.3.1 OF THE 2012 IBC WITH CITY OF HOUSTON AMENDMENTS.

IDS Engineering Group
13430 NW. Freeway, Suite 700
Houston, Tx. 77040
713.462.3178
TxEng Firm 2726 | TxSurv Firm 10110700

SURVEYED BY: KUO & ASSOCIATES, INC.
TBPE FIRM #F-4578; TBPLS FIRM #1007560

THIS DOCUMENT IS RELEASED FOR THE PURPOSE OF REVIEW UNDER THE AUTHORITY OF MARCEL KHOUW, P.E. 101807 ON 12/17/2025. IT IS NOT TO BE USED FOR CONSTRUCTION PURPOSES.

CITY OF HOUSTON
HOUSTON PUBLIC WORKS

LIFT STATION RENEWAL AND REPLACEMENT FY 2023

MARKET STREET LIFT STATION ELEVATED ELECTRICAL PLATFORM

WBS NUMBER	FOR CITY OF HOUSTON USE ONLY
R-000267-0179-4	
DRAWING SCALE	
HORIZ: 1" = 2' VERT: N/A	
CITY OF HOUSTON PM	
NAWARAJ PANTA, P.E.	

DWG. NO.	SHEET NO. 160 OF 321
MKT-A-01	

PLOTTED: 12/17/2025 8:19 AM
FILE PATH: \\idseg.com\FS\Projects\0000\005708500 CoH Lift Stations - FY 2023\CAD\DWG\PRODUCTION\161-MARKET ST RECORD DWG.dwg

NO.	DATE	REVISION	APP.

SEE SHEET C2

EXIST. ~~PROP. 10' SAN. SWR. ESM'T.~~

EXIST. ~~PROP. 15' (FORCE MAIN) SAN. ESM'T.~~

⚠ PROP. 3/4" W.L. (BORE & JACK)

60' ACCESS ESM'T.

TYPICAL THRUST BLOCKING ~~(SEE SHT. 9)~~

7.5'

INTERIM ACCESS ROAD ~~(By Others)~~

1'(TYP.)

EXIST. ~~PROP.~~ TOP PVM'T. ~~(BY OTHERS)~~

T.P. 14.75

10'X 30' ACCESS ESM'T.

⚠ PROP. 3/4" W.L. (BORE & JACK)

⚠ PROP. 3/4" METER

PROP. BACKFLOW PREVENTER WITH HOSE BIB ⚠

RESERVE "F"

EXIST. ~~PROP. 8" SAN. (BY OTHERS)~~

EXIST. PLUG & CAP 8"Ø ~~+ 7.51~~

EXIST. 6.0' L.F. - 8" SAN. @ 0.40%

5'-0"

PROPERTY LINE

EXIST. ~~PROP.~~ 30' (FORCE MAIN) SAN. ESM'T.

N 03° 10' 02" W 30.00'

ESM'T.

EXIST. ~~PROP.~~ 10' SAN. SEW. ESM'T.

INTERIM ACCESS ROAD (BY OTHERS)

EXIST. TYPE 'A' M.H. 8"E ~~+ 7.19~~

EXIST. ~~PROP.~~ AREA DRAIN INLET T.G. ~~+ 16.58~~ E ~~+ 14.58~~

INTERNAL DRAINAGE SYSTEM PLANS ARE BY C.A. BENTON & ASSOC., INC. (713) 965-7788

EXIST. 55.0' L.F. 12" PVC. DRAIN LINE @ 90°±

EXIST. ~~PROP.~~ 8" (BY OTHERS)

EXIST. ~~PROP.~~ 18" STM. (BY OTHERS)

37'-0"

I-10 UVALDE CENTER

RESERVE "D"

EXIST. TOP OF PVM'T. ~~+ 17.83~~

N 86° 30' 52" E 30.00'

BEGIN 4" PVC. A.W.W.A. (C-900) FORCE MAIN

ROLL 45° BENDS AS NECESSARY

⚠ REMOVE AND REPLACE APCO Ø 400 AIR RELEASE VALVE

PROP AIR CELL W/O MH (TYP.)

4" X 45° BENDS (2 ELLS) 6"X9" CONC. BOX)

TOP OF PVM'T. ~~+ 19.33~~

ALUMINUM GRATING LOCK & HASP EACH PANEL

1" CORP. STOP UNION & NIPPLE W/1" PVC. (SR-18) OR EQUAL DRAIN TO DRAIN HOLE

4" PLUG VALVE ON TOP OF 8"X4" TEE POINTED UPWARDS FOR BY PASS PUMPING

REMOVE EXIST. 3" FLOOR DRAIN AND REPLACE WITH TRAP DRAIN WITH BACK-WATER VALVE. 6'

REMOVE AND REPLACE 4" PLUG VALVE.

REMOVE AND REPLACE 4" CHECK VALVE 12" SLIDING GATE

EXIST. TOP OF PVM'T. ~~+ 19.00~~

PROP. LADDER

EXIST. 10" D.I.P. @ 0.28%

EXIST. 42.5' L.F. ~ 8" SAN. @ 0.40%

EXIST. TOP OF PVM'T. ~~+ 17.00~~

EXIST. TYP. 4' M.H. 10"E ~~+ 6.85~~ (W) 8"E ~~+ 3.02~~ (S) 8"E ~~+ 0.50~~

SET MANHOLE TOP FLUSH W/ PVMT.

RESERVE "J"

EXIST. TOP OF PVM'T. ~~+ 17.19~~

EXIST. 8.0' L.F. ~ 8" SAN. @ 0.40%

S 86° 30' 52" W 30.00'

EXIST. TOP OF PVM'T. ~~+ 17.00~~

EXIST. 8" STEEL POST FILLED W/ CONC. (SEE DETAIL) TYP.

35'X 10' L.S. DRAINAGE ESM'T.

35'-0"

PLUG & CAP E ~~+ 8.53~~

5.0'

EXIST. ~~PROP.~~ 10' SAN. ESM'T.

EXIST. ~~PROP.~~ TOP OF PVM'T. 17.00 (BY OTHERS)

EXIST. ~~PROP.~~ 8" SAN. (BY OTHERS)

H.C.F.C.D. 147' FEE STRIP (TO BE DEDICATED BY OTHERS)

EXIST. PLAN 1" = 3'

~~NOTE: REFER TO SHEET 10 FOR SERVICE ANALYSIS AND ELECTRICAL DATA SHOWN IN PLAN~~

PROP. ACCESS HATCH WITH SAFETY NET

PROP. TOP OF SLAB (SEE SHT. C8)

⚠ PROP. YARD LIGHT

EXIST. TOP OF PVM'T. ~~+ 17.23~~

⚠ REMOVE EXIST. 7' FENCE (CHAIN LINK W/REDWOOD SLATS AND 3 STRANDS, BARBED WIRE ALL AROUND TOP

ENTIRE SITE IS PAVED W/ 5" REINFORCED CONC. PVM'T. W/ 6" OF STABILIZED BASE COMPACTED TO 95% STANDARD PROCTOR DENSITY

PROP. CHAIN LINK FENCE WITH 3 STRANDS BARBED WIRE (SEE SHT. C4)

TP ~~+ 19.00~~

TOP OF LIFT STATION ~~18.5~~

TOP OF PVM'T. ~~+ 19.33~~

2-FLYGT CP-3102 IMP 936

⚠ REMOVE AND REPLACE EXIST. PUMPS

7'-0"

8.0'

6.0'

REMOVE EXIST. MOTOR CONTROLS

EXIST. H.L.P.&L. CO. METER

REMOVE AIR CELL

10"Ø C.I.P.

EXIST. 80' C.I.S SERVICE POLE (TREATED)

10.0'

PROP. 36"x60"x72" CONTROL PANEL ⚠

EXIST. 6.0' L.F. - 8" SAN. @ 0.40%

EXIST. TOP OF PVM'T. ~~+ 19.00~~

PROPERTY LINE

⚠ REMOVE EXIST. CONTROL PANEL AND CONDUIT

EXIST. CHAIN LINK FENCE

EXIST. SERVICE POLE 30' CREOSOTE CLASS III WOOD POLE W/ METERING & FUSE DISCONNECT SWITCH - INSTALL FUSE DISCONNECT & METERING BACK TO BACK

EXIST. ~~PROP.~~ METER TO BE REMOVED BY CPL

EXIST. NEMA 3R MCC

EXIST. 3" ALUM. UNDER-GROUND (36" DEEP)

TO POWER SUPPLY

EXIST. CHAIN LINK FENCE

⚠ REMOVE EXIST. AIR CELL AND CONDUIT

PROPERTY LINE

REMOVE AND REPLACE ⚠ EXIST. FENCE (SEE SHT. C4)

EXIST. ELECTRICAL SITE PLAN
SCALE: 1"=6'

10" ROUND GRATE NEENAH R-4342-1A OR EQUAL

FINISHED GRADE

10" P.V.C. PIPE

GROUT COLLAR AROUND INLET

SEE DRAINAGE PLAN FOR DEPTH (VARIES)

SEE PLANS FOR PIPE SIZE

CONCRETE PAD

EXIST. AREA DRAIN INLET DETAIL
N.T.S.

NOTE: PLANS FOR ADJACENT & OFF PROJECT PAVING AND SITE ACCESS ARE INCLUDED IN CONSTRUCTION PLANS BY C/E CONSULTANTS C.O.H. LOG. # 85-0591 2/2

RECORD DRAWING

DRAWING(S) HAVE BEEN REVISED TO REFLECT AS-BUILT CONDITIONS BASED ON INFORMATION PROVIDED TO THE ENGINEER, THE OWNER AND CONTRACTOR

Ronald D. Westbrook P.E.

NOTES:
1. This drawing is a reproduction of City of Houston drawing number 28434. Contractor shall field verify all dimension, elevations, and all other data prior to start of construction. Notify any discrepancies to the Engineer.
2. All items and facilities shown on this sheet are existing unless otherwise noted.

STATE OF TEXAS RONALD WALKOWIAK 90750 3-21-95

⚠ RECORD DRAWING
⚠ ADDENDUM NO. 2 5/4/95

DANNENBAUM ENGINEERING CORPORATION
HOUSTON, TEXAS

MARKET STREET No.2 LIFT STATION

PROJECT NO. 4275-2

TITLE LIFT STATION SITE PLAN

CITY OF HOUSTON
DEPARTMENT OF PUBLIC WORKS AND ENGINEERING
ENGINEERING, CONSTRUCTION AND REAL ESTATE GROUP

SECTION APPROVALS

WATER DESIGN 3-24-95	TRAFFIC AND SIGNAL DESIGN 3.24.95
STORM SEWER DESIGN	STREET, BRIDGE & R.O.W.
WASTEWATER DESIGN	CONSTRUCTION 3/24/95

OTHER DEPARTMENTS
PLANNING AND DEVELOPMENT 3/29/95

CITY ENGINEER 3-30-95 DATE

SUBMITTED: MARCH 1995 DESIGNED BY:
SCALE: AS SHOWN DRAWN BY:
DATE: MARCH 1995 SHEET NO.C5 OF 16 SHEETS
SURVEY BY: K R E & S DWG. NO. 31771
F.B. NO.

IDS Engineering Group
13430 NW. Freeway, Suite 700
Houston, Tx. 77040
713.462.3178
TxEng Firm 2726 | TxSurv Firm 10110700

SURVEYED BY: KUO & ASSOCIATES, INC.
TBPE FIRM #F-4578; TBPLS FIRM #1007560

THIS DOCUMENT IS RELEASED FOR THE PURPOSE OF REVIEW UNDER THE AUTHORITY OF MARCEL KHOUW, P.E. 101807 ON 12/17/2025. IT IS NOT TO BE USED FOR CONSTRUCTION PURPOSES.

CITY OF HOUSTON
HOUSTON PUBLIC WORKS

LIFT STATION RENEWAL AND REPLACEMENT FY 2023

EXISTING LIFT STATION RECORD DRAWING (SHEET 1 OF 2)

WBS NUMBER	FOR CITY OF HOUSTON USE ONLY
R-000267-0179-4	
DRAWING SCALE	
HORIZ: AS NOTED VERT: N/A	
CITY OF HOUSTON PM	
NAWARAJ PANTA, P.E.	

DWG. NO. MKT-C-10

SHEET NO. 161 OF 321

FOR REFERENCE ONLY

PLOTTED: 12/17/2025 8:19 AM

FILE PATH: \\idseg.com\FS\Projects\0000\005708500 CoH Lift Stations - FY 2023\CAD\DWG\PRODUCTION\162-MARKET ST RECORD DWG.dwg

NO.	DATE	REVISION	APP.

2 NOTE: WET WELL WALL SHALL BE REHABILITED BY REMOVING 3"(MIN.) CONCRETE BY HYDROJETTING AND REPAIRED WITH MAINSTAY DS-4 LINER WITH RELINER MSP(ML-72 MONOLITHIC LINER). TEST PROJECT OF THE CITY OF HOUSTON REHABILITATION PROGRAM.

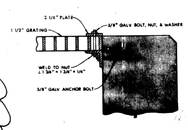

DETAIL "A"
N.T.S.

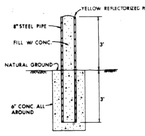

GUARD POST

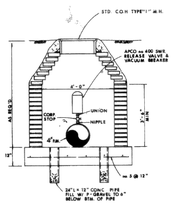

TYPE "L" M.H. W/ AIR RELEASE VALVE

NOTE: GRATING SHALL BE 1-1/2 INCHES IN DEPTH UNLESS OTHERWISE INDICATED ON THE DRAWINGS. BEARING BARS SHALL BE AT LEAST 3/16 INCH THICK, AND SPACED AT 1-3/16 CENTERS, AND TIED WITH TRANSVERSE BARS SPACED NO MORE THAN 2 INCHES ON CENTER.

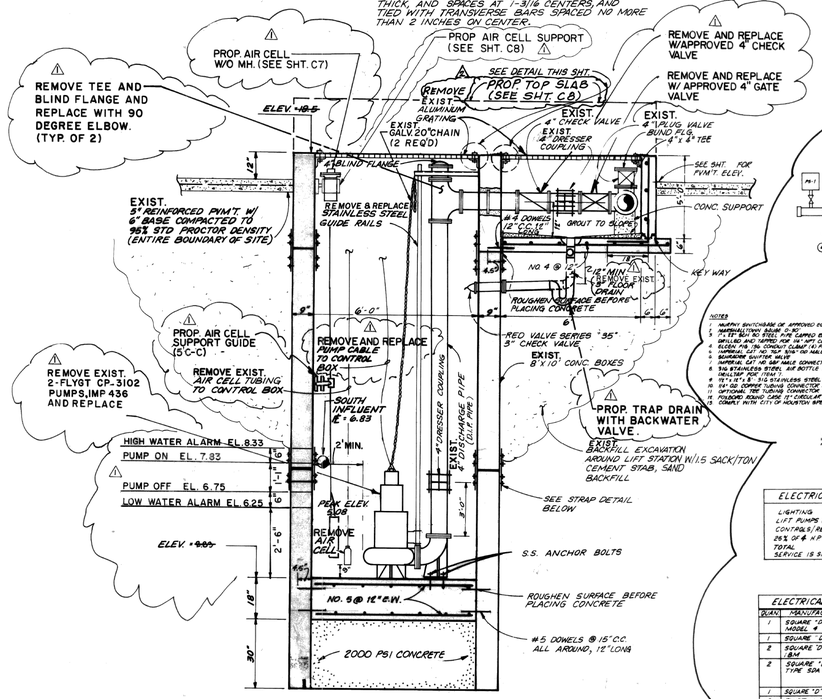

EXIST. ELEVATION 1"=2'

SEE SITE PLAN SHEET

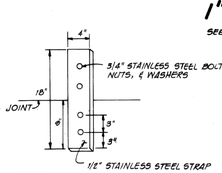

EXIST.
NOTE: STAINLESS STEEL STRAP TO BE PLACED AT JOINTS SPACED AT 1/3 WIDTH OF WALL ALL AROUND. PLACE A NEOPRENE GASKET BETWEEN WALL AND STRAP

EXIST.

PUMP LEVELS	
PUMP ON @	~~5.08~~
PUMP OFF @	~~4.08~~
HIGH LEVEL @ ALARM	~~7.08~~

RECORD DRAWING

DRAWINGS HAVE BEEN PREPARED TO REFLECT AS-BUILT CONDITIONS BASED ON INFORMATION PROVIDED TO CONSULTANT BY THE OWNER AND CONTRACTOR.

BY: Ronald D. Wattenbarger P.E.

WET WELL LEVEL CONTROL
N.T.S.

NOTES
1. MARTIN SWITCHGEAR OR APPROVED EQUAL
2. 3"x 12" BUS NO. 90 STEEL PER CAMPBELL STOCK AND DRILLED AND TAPPED FOR 1/4" NPT CONNECTIONS.
3. ELGEN P/N 3R CONDUIT CLAMP (4) PER 1" TYP.
4. HARDWARE SHALL BE 3/8" SAE GRADE 5 PLATED.
5. 3/4" x 3" x 3/16" ALUMINUM ANGLE.
6. SUPERIOR 221 OR 661 MALE CONNECTOR (4"OD)
7. 316 STAINLESS STEEL AIR BOTTLE W/ PIPE CAP 3"x12"
8. WELDTAP FOR 1"DIA.
9. 1" x 12" x 3/16 STAINLESS STEEL WELDED TO AIR BOTTLE
10. 1" x 12" x 3/16 STAINLESS STEEL WELDED TO BRACKET
11. OPTIONAL TEE TUBING CONNECTOR FOR PRESSURE SWITCHES
12. FOXBORO BOARD CARD 17 CIRCULAR CHART LEVEL RECORDER O-30' (SHALL COMPLY WITH CITY OF HOUSTON SPEC. #1615 SEC. 17 "RTU").

ELECTRICAL LOAD ANALYSIS

LIGHTING	0.6 AMPS
LIFT PUMPS (2) @ 4 H.P.	16.0 AMPS
CONTROLS/RECEPT./MISC.	5.0 AMPS
25% OF 6 H.P. PUMP	2.0 AMPS
TOTAL	23.6 AMPS

SERVICE IS SIZED AT 115 A, 460V, 3 Ø, 3W

ELECTRICAL EQUIPMENT SCHEDULE

QUAN.	MANUFACTURER	DESCRIPTION
1	SQUARE "D" CLASS 9998 MODEL 4	NEMA 3R OUTDOOR ENCL. 91"H, 80"W
1	SQUARE "D" # D323	200 A/3P FUSED SW TY.
2	SQUARE "D" # FAL 36100-1BM	100 A/3P CIRCUIT BREAKERS
2	SQUARE "D" CLASS 8538 TYPE 52A	AC COMBINATION STARTER NEMA SIZE 3 NONRAD-OFF-AUTOMATIC SELECTOR SWITCH
1	SQUARE "D" # D0150	50 A/3P CIRCUIT BREAKER
2	FLYGT # C 3102	4 H.P./3Ø LIFT PUMPS
1	GENERAL ELECTRIC	8 CKT PANEL NITOL CAT # TQ1L/P 1662 M.C.B.

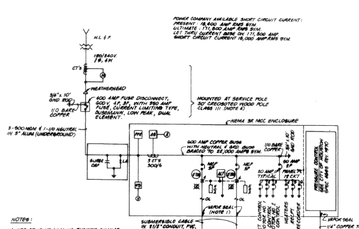
PHASE COMPANY AVAILABLE SHORT CIRCUIT CURRENT: PRESENT: 19,800 AMP SYM RMS ESTIMATE: 17% MAX AMP SYM RMS 1ST TYPE SUPPLY BEING ON 11,500 AMP SHORT CIRCUIT CURRENT 19,000 AMP SYM RMS
M.L.S.P.
UTILITY 7.2 KV
GT's
WEATHERHEAD
500 MCM COPPER RUN WITH NEUTRAL # 500 MCM BARE BONDED TO #2 GND
MOUNTED ON SERVICE POLE 30' GALVANIZED STEEL POLE CLASS 1 (NOTE 2)
3 - 500 MCM & 1 - 2/0 INSULATED IN 3" RUN UNDERGROUND
600 AMP FUSE DISCONNECT, POLE MTD. WITH PAD MTD. TRANSFORMER, TYP. SUBMERSIBLE, LOW PEAK, DUAL ELEMENT
NEMA 3R NEC ENCLOSURE
#2 GND
#2 GND COPPER
#2 AWG COPPER RUN WITH NEUTRAL # 4/0 AWG BONDED TO #2 GND
#2 AWG COPPER
#2 AWG COPPER
#2 AWG COPPER

PLATFORM INTENT

EXPLODED 3D MODEL OF STRUCTURE
IS ONLY FOR VISUAL REFERENCE, AND
SHALL NOT BE USED TO GATHER
STRUCTURAL INFORMATION

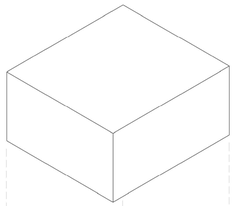

UNIT BY OTHERS

ISOMETRIC 3D MODEL OF STRUCTURE
IS ONLY FOR VISUAL REFERENCE, AND
SHALL NOT BE USED TO GATHER
STRUCTURAL INFORMATION

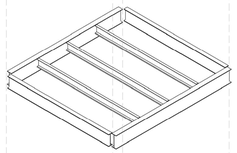

FRAMING SYSTEM

ISOMETRIC 3D MODEL OF STRUCTURE
IS ONLY FOR VISUAL REFERENCE, AND
SHALL NOT BE USED TO GATHER
STRUCTURAL INFORMATION

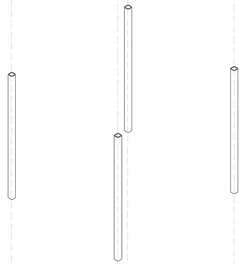

COLUMN SYSTEM

ISOMETRIC 3D MODEL OF STRUCTURE
IS ONLY FOR VISUAL REFERENCE, AND
SHALL NOT BE USED TO GATHER
STRUCTURAL INFORMATION

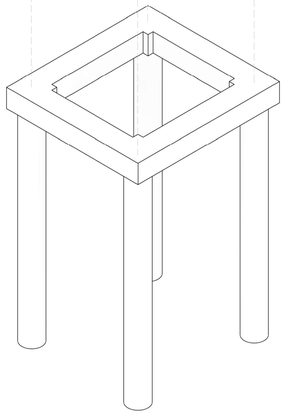

FOUNDATION SYSTEM

ISOMETRIC 3D MODEL OF STRUCTURE
IS ONLY FOR VISUAL REFERENCE, AND
SHALL NOT BE USED TO GATHER
STRUCTURAL INFORMATION

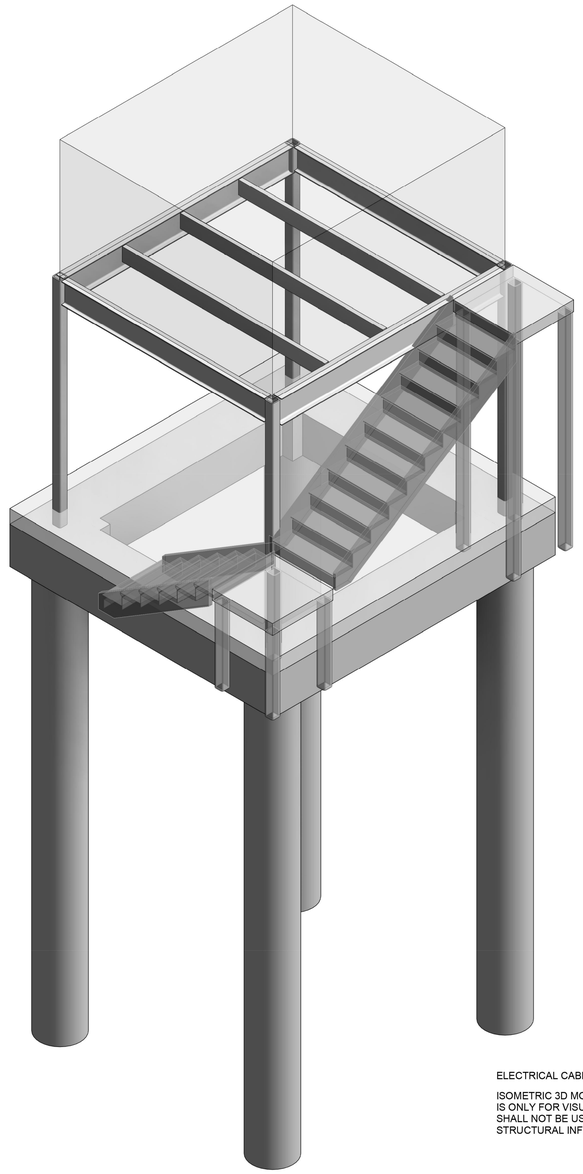

ELECTRICAL CABINET PLATFORM

ISOMETRIC 3D MODEL OF STRUCTURE
IS ONLY FOR VISUAL REFERENCE, AND
SHALL NOT BE USED TO GATHER
STRUCTURAL INFORMATION

NO.	DATE	REVISION	APP.

P.E. SEAL
REQUIRED

PRELIMINARY

SUBJECT TO REVISION

This document is released for informational purposes under the authority of DAVID MOORE P.E. 139405 on 12/11/2025 It is not to be used for regulatory approval, permit, bidding, or construction purposes.

CONCEPT ENGINEERS
TX. FIRM REGISTRATION # F-04417
Structures for the whole community

IDS Engineering Group
13430 NW. Freeway
Suite 700
Houston, Tx. 77040
713.462.3178
TxEng Firm 2726
TxSurv Firm 10110700

CITY OF HOUSTON
HOUSTON PUBLIC WORKS

LIFT STATION RENEWAL
AND REPLACEMENT FY 2023

COVER SHEET – 3D MODEL

WBS NUMBER	FOR CITY OF HOUSTON USE ONLY
R-000267-0179-4	
DRAWING SCALE	
AS NOTED	
CITY OF HOUSTON PM	
NAWARAJ PANTA, P.E.	
SHEET NO.: 163 OF 321	

DWG. NO.
MKT-S-01

DESIGN CRITERIA

1. DESIGN CODE INTERNATIONAL BUILDING CODE 2021 WITH CITY OF HOUSTON AMENDMENTS

2. DESIGN LOADS:

   A. LIVE LOADS: (PSF)DEAD LOADS

SLABS OF GRADE	100	PSF	ELECTRICAL CABINET WEIGHT	95,000 LBS
STORAGE & MECHANICAL	150	PSF		

   B. DEAD LOADS (SUPERIMPOSED)

SLABS OF GRADE	15	PSF
STORAGE & MECHANICAL	15	PSF

	UNIFORM LOADS	CONCENTRATED LOADS
STAIRS & EXISTING WAY	100 PSF	300 LBS
HANDRAILS & GUARD RAILS	50 LB/FT	200 LBS

3. WIND SPEED 147 MPH 3 SEC. GUST (ULTIMATE)
   EXPOSURE CATEGORY "C"
   RISK CATEGORY III
   DESIGN WIND FORCE ON ELECTRICAL BUILDING XX LBS

GENERAL NOTES

1. THE CONTRACTOR SHALL COMPARE THE STRUCTURAL DRAWINGS WITH THE ARCHITECTURAL, CIVIL, PLUMBING, MECHANICAL AND ELECTRICAL DRAWINGS AS TO LAYOUT DIMENSIONS AND ELEVATIONS. ALL DISCREPANCIES, IF ANY ARE FOUND, SHALL BE REPORTED TO THE ARCHITECT FOR PROPER ADJUSTMENT BEFORE PROCEEDING WITH WORK. ANY DISCREPANCIES WITH THE STRUCTURAL DOCUMENTS SHALL BE IMMEDIATELY BROUGHT TO THE ATTENTION OF THE ARCHITECT/ENGINEER PRIOR TO THE SUBMISSION OF BIDS OF PROPOSALS, BEFORE COMMENCING THE WORK IN QUESTION. NO FIELD CHANGES OR DEVIATIONS FROM THE DESIGN ARE TO BE MADE WITHOUT PRIOR WRITTEN APPROVAL OF THE ARCHITECT AND/OR STRUCTURAL ENGINEER. NO CHANGE ORDER CONSIDERATION WILL BE GIVEN TO CHANGES FOR WHICH THE ARCHITECT AND/OR ENGINEER WERE NOT CONTACTED PRIOR TO CONSTRUCTION OF THE AFFECTED ITEM.

2. IN THE EVENT THAT CERTAIN FEATURES OF THE CONSTRUCTION ARE NOT FULLY SHOWN IN THE DRAWING OR CALLED OUT IN THE STRUCTURAL NOTES OR IN THE SPECIFICATIONS, THEN SUCH CONSTRUCTION SHALL BE IN THE SAME CHARACTER FOR SIMILAR CONDITIONS THAT ARE SHOWN OR CALLED FOR.

3. SEE ARCHITECTURAL DRAWINGS FOR FLOOR ELEVATIONS, SLOPE, AND THE LOCATION OF DEPRESSED FLOOR AREAS, AND OTHER REQUIREMENTS AT COLUMNS, WALLS, STAIRWELLS, SLABS, ETC. THE CONTRACTOR SHALL COMPARE THE STRUCTURAL SECTIONS WITH THE ARCHITECTURAL SECTIONS AND REPORT ANY DISCREPANCY TO THE ARCHITECT PRIOR TO FABRICATING OR INSTALLING STRUCTURAL MEMBERS.

4. PRINCIPAL OPENINGS THROUGH THE FRAMING ARE SHOWN ON DRAWINGS. THE CONTRACTOR SHALL EXAMINE THE ARCHITECTURAL AND MECHANICAL DRAWINGS FOR THE REQUIRED OPENINGS AS HE SHALL PROVIDE FOR ALL OPENINGS WHETHER SHOWN ON THE DRAWINGS OR NOT AND SHALL VERIFY SIZE AND LOCATION OF ALL OPENINGS WITH THE MECHANICAL CONTRACTOR. ANY DEVIATION FROM THE OPENINGS SHOWN ON THE STRUCTURAL DRAWINGS SHALL BE BROUGHT TO THE ENGINEER'S ATTENTION FOR APPROVAL.

5. REFER TO THE SPECIFICATIONS PROVIDED WITH THIS SUBMITTAL FOR THE REQUIRED STRUCTURAL SUBMITTALS THAT MUST BE SUBMITTED FOR E.O.R. REVIEW.

6. SPECIFICATIONS ARE PART OF THE CONSTRUCTION DOCUMENTS AND MUST BE USED IN CONJUNCTION WITH THE DRAWINGS.

7. DETAILS LABELED "TYPICAL DETAILS" ON DRAWINGS APPLY TO SITUATIONS OCCURRING ON THE PROJECT THAT ARE THE SAME OR SIMILAR TO THOSE SPECIFICALLY DETAILED, SUCH DETAILS APPLY WHETHER OR NOT THEY ARE REFERENCED AT EACH LOCATION. NOTIFY E.O.R. OF CONFLICTS REGARDING APPLICABILITY OF "TYPICAL DETAILS".

8. DO NOT LOAD THE SLAB ON GRADE WITH ERECTION CRANES OR ERECTION EQUIPMENT. THE SLAB HAS NOT BEEN DESIGNED FOR CRANE LOADS AND WILL REQUIRE AN INCREASE OF THICKNESS AND/OR REINFORCEMENT. OBTAIN E.O.R. APPROVAL ON PROPOSED CRANE SUPPORT PLAN FOR SLABS PRIOR TO COMMENCING WORK.

9. DO NOT STORE OR STACK CONSTRUCTION MATERIALS ON POURED OR ERECTED FLOOR/ROOFS IN EXCESS OF 80 PERCENT OF LIVE LOAD. CONTRACTOR SHALL ENSURE THAT ALL SUB-CONTRACTORS ARE INFORMED OF LOAD RESTRICTIONS. AVOID IMPACT WHEN PLACING MATERIALS OF POURED OR ERECTED SLABS FLOOR OR ROOF.

10. THE CONTRACT STRUCTURAL DOCUMENTS REPRESENT THE FINISHED STRUCTURE. THE CONTRACTOR IS RESPONSIBLE FOR THE MEANS OR METHODS OF CONSTRUCTION, PROVIDE ALL MEASURES REQUIRED TO PROTECT THE STRUCTURE, WORKMEN AND OTHER PERSONS DURING CONSTRUCTION; INCLUDING SHORING FOR CONSTRUCTION EQUIPMENT, SHORING FOR THE BUILDING, FORMS AND SCAFFOLDING, SHORING FOR THE RETAINING WALLS AND OTHER TEMPORARY SUPPORTS REQUIRED.

11. ALL STAIR MEMBERS INCLUDING, BUT NOT LIMITED TO, STRINGERS AND HANDRAILS SHALL BE DESIGNED BY STAIR ENGINEER AND STEEL FABRICATOR.

12. SHOP DRAWINGS AND OTHER ITEMS SHALL BE SUBMITTED TO THE ENGINEER FOR REVIEW PRIOR TO FABRICATION. ALL SHOP DRAWINGS SHALL BE REVIEWED BY THE GENERAL CONTRACTOR BEFORE SUBMITTAL. THE ENGINEER'S REVIEW IS TO BE FOR CONFORMANCE WITH THE DESIGN CONCEPT AND GENERAL COMPLIANCE WITH THE RELEVANT CONTRACT DOCUMENTS. THE ENGINEER'S REVIEW DOES NOT RELIEVE THE CONTRACTOR OF THE SOLE RESPONSIBILITY TO REVIEW, CHECK AND COORDINATE THE SHOP DRAWINGS PRIOR TO SUBMISSION. THE CONTRACTOR REMAINS SOLELY RESPONSIBLE FOR ERRORS AND OMISSIONS ASSOCIATED WITH THE PREPARATION OF SHOP DRAWINGS AS THEY PERTAIN TO MEMBER SIZES, DETAILS, DIMENSIONS, ETC.

13. SHOP DRAWINGS SHALL BE PREPARED WITH SUFFICIENT DETAIL AND NOTATION FOR FIELD ERECTION AND INSTALLATION. PHOTO COPIES OF THE CONTRACT DRAWINGS FOR USE AS SHOP DRAWINGS WILL NOT BE PERMITTED.

FOUNDATION NOTES

1. THE FOUNDATION SYSTEM HAS BEEN DESIGNED BASED ON THE FOLLOWING RECOMMENDATIONS SPECIFIED IN THE GEOTECHNICAL INVESTIGATION REPORT NUMBER HGT2210460.1.1 (C) BY HVJ ASSOCIATES, INC., DATED 10/24/2025. THE FOUNDATION SYSTEM IS DRILLED STRAIGHT SHAFTS AND AND HAS BEEN DESIGNED USING THE CAPACITIES THAT CAN BE FOUND IN THE GEOTECHNICAL REPORT. REFER TO PLAN FOR TOTAL DEPTH BELOW EXISTING GRADE. CONCRETE SHOULD BE PLACED IN THE DRILLED HOLES WITHIN FOUR HOURS OF EXCAVATION TO REDUCE THE RISK OF GROUNDWATER SEEPAGE, DETERIORATION OF THE FOUNDATION BEARING SURFACE AND UNDERREAM COLLAPSE. REFER TO THE GEOTECHNICAL REPORT.

2. THE CONTRACTOR MUST OBTAIN A COPY OF THE GEOTECHNICAL REPORT DESCRIBED ABOVE AND FOLLOW ALL RECOMMENDATIONS IN REGARDS TO SOIL PREPARATION, COMPACTION, REMOVAL AND FILL REQUIREMENTS AS NECESSARY TO ACHIEVE THE DESIGN SOIL BEARING PRESSURE CAPACITY IF REQUIRED.

3. IN GENERAL SITE PREPARATION SHOULD CONSIST OF REMOVING ANY EXISTING FOUNDATIONS, PAVED AREAS, GRASS, TREE ROOTS, AND STRIPPING ORGANIC TOP SOILS. THE EXPOSED SUBGRADE SHOULD BE PROOF-ROLLED TO DETECT LOCAL WEAK AREAS WHICH SHOULD BE EXCAVATED, PROCESSED, AND RECOMPACTED IN LOOSE LIFTS OF APPROXIMATELY EIGHT-INCH THICKNESS. IN FLOOR SLAB, SUBGRADE SOILS SHOULD BE COMPACTED TO A MINIMUM OF 95% OR THE PROCTOR MAXIMUM DRY DENSITY (ASTM D698) AT A MOISTURE CONTENT WITHIN -1% TO +3% OF MAXIMUM MOISTURE. TREE STUMPS, IF PRESENT, SHOULD BE REMOVED BELOW FLOOR SLAB OR PAVEMENT GRADE, AND REMOVE 2 FEET OF EXISTING SOIL AND REPLACE WITH SELECTED FILL AS PER CITY OF HOUSTON STANDARD CONSTRUCTION SPECIFICATIONS. REFER TO GEOTECHNICAL REPORT.

4. SEE CIVIL DRAWINGS FOR ALL EXTERIOR SLABS AND CURBS AND LIMITS OF EXCAVATION.

5. DURING THE PLACEMENT AND FINISHING OF SLAB, USE FOGGING OR MISTING EQUIPMENT TO APPLY MOISTURE TO THE SLAB AREAS UNTIL FINAL CURING HAS BEGUN TO AVOID EXCESSIVELY RAPID EVAPORATION OF WATER FROM THE SLAB. DO NOT USE SPRAY WATER BOTTLES THAT APPLY LARGE AMOUNTS OF WATER THE SLAB SURFACE

6. FOR ALL REINFORCED CONCRETE FOUNDATION MEMBERS, CONTRACTOR SHALL FOLLOW ALL THE APPLICABLE ITEMS ON THE "REINFORCED CONCRETE NOTES:".

7. PROTECT PIPES AND CONDUITS RUNNING THROUGH WALLS AND SLABS WITH 1/2" EXPANSION MATERIAL.

8. DO NOT PLACE FOOTINGS OR SLABS AGAINST SUBGRADE CONTAINING FREE WATER.

9. MAINTAIN PROPER SITE DRAINAGE DURING CONSTRUCTION TO ENSURE SURFACE RUNOFF AWAY FROM STRUCTURES AND TO PREVENT PONDING OF SURFACE RUNOFF NEAR THE STRUCTURES.

10. KEEP OPEN EXCAVATIONS AROUND BUILDING DRY, BACKFILL AGAINST FOUNDATIONS AND GRADE BEAMS AS SOON AS PRACTICAL. PUMP WATER OUT OF OPEN EXCAVATIONS OF FLOODING PRIOR TO BACKFILLING.

REINFORCED CONCRETE NOTES

1. DETAILING OF CONCRETE REINFORCEMENT AND ACCESSORIES SHALL BE IN ACCORDANCE WITH ACI PUBLICATION 315, LATEST EDITION.

2. CONCRETE REINFORCING SHALL CONFORM TO THE REQUIREMENTS OF ASTM A-615, GRADE 60. WELDED WIRE FABRIC SHALL BE IN ACCORDANCE WITH ASTM A-185.

3. CONCRETE IN ALL AREAS SHALL HAVE SAND AND GRAVEL AGGREGATE CEMENT CONFORMING TO ASTM C 150, TYPE I, AND DESIGNATED COMPRESSIVE STRENGTH (f'c) AT 28 DAYS AS CALLED OUT IN NOTE #4 BELOW. ALSO SEE PROJECT SPECIFICATIONS FOR DIFFERENT AGGREGATE AND COMPRESSIVE STRENGTH REQUIREMENTS.

4. UNLESS NOTED OTHERWISE, CONCRETE SHALL MEET OR EXCEED THE MINIMUM COMPRESSIVE STRENGTH REQUIREMENTS AT 28 DAYS:

   A. CONCRETE DESIGN STRENGTH:

a. GRADE BEAMS & SLABS ON GRADE:	f'c = 4,000 PSI
b. PIER CAPS, WALLS, STAIRS & ANY OTHER NOT NOTED:	f'c = 4,000 PSI
c. PIERS:	f'c = 4,000 PSI

   B. CONCRETE COVER REINFORCEMENT COVER SHALL MEET THE FOLLOWING REQUIREMENTS (UNLESS SPECIFICALLY OTHERWISE IN PLANS):

a. SLAB ON GRADE	1" TOP
b. GRADE BEAMS	1 1/2" TOP, 3" BOTTOM, 2" SIDES
c. DRILLED PIERS	3" ALL SURFACES
d. COLUMNS	1 1/2" ALL SURFACES

   (SEE SECTION 20.6 ACI 318-19 FOR CONDITIONS NOT NOTED.

5. FLY ASH MAY BE USED TO REPLACE A PORTION OF THE PORTLAND CEMENT, THE RATIO OF FLY ASH TO THE TOTAL OF THE FLY ASH AND CEMENT IN A MIX SHALL NOT EXCEED 20%. FLY ASH SHALL CONFORM TO ASTM C618, TYPE C OR F.

6. IT SHALL BE THE RESPONSIBILITY OF THE CONTRACTOR TO COORDINATE WITH THE CONCRETE SUPPLIER TO ENSURE A PUMPABLE AND WORKABLE MIX. TESTING LAB WILL CONTROL SLUMP AND ONLY TESTING LAB CAN ADD WATER ON JOB SITE. CONCRETE SUPPLIER WILL INFORM TESTING LAB/CONTRACTOR OF MAXIMUM WATER ALLOWABLE THAT CAN BE ADDED ON JOB SITE BEFORE W/C RATIO IS EXCEEDED. THE USE OF PLASTICIZERS, RETARDANTS AND OTHER ADDITIVES SHALL BE AT THE OPTION OF THE CONTRACTOR SUBJECT TO THE APPROVAL OF THE STRUCTURAL ENGINEER. FOLLOW THE RECOMMENDATIONS OF THE MANUFACTURER FOR THE PROPER USE OF ADDITIVES. THE USE OF CALCIUM CHLORIDE OR OTHER CHLORIDE BEARING SALTS SHALL NOT BE PERMITTED.

7. CONCRETE SLUMP TESTS SHALL BE MADE BEFORE AND AFTER THE ADDITION OF ADMIXTURES AND MAY BE TAKEN AT THE BACK OF THE TRUCK. CONCRETE FOR THE PREPARATION OF TEST CYLINDERS SHALL BE TAKEN FROM THE HOSE END FOR CONCRETE PLACED BY PUMP.

8. ALL REINFORCING STEEL SHALL BE LAPPED PER THE LATEST EDITION OF THE ACI-318-19. SPLICES. CORNERS AND INTERSECTIONS WITH STANDARD 90 DEGREE BEND OR CORNER BARS. LAP TOP BARS AT CENTER OF SPAN. LAP WELDED WIRE MESH ONE FULL MESH AT SIDE AND END LAPS. DO NOT LAP OR WELD REINFORCEMENT IN THE FIELD UNLESS SPECIFICALLY SHOWN ON STRUCTURAL DRAWINGS OR APPROVED BY E.O.R. WHEN SPECIFICALLY APPROVED, PROVIDE WELDED REINFORCEMENT IN ACCORDANCE WITH ASTM A706. USE LOW HYDROGEN ELECTRODES FOR WELDING OF REINFORCEMENT IN CONFORMANCE WITH "WELDING STEEL, METAL INSERTS AND CONNECTIONS IN REINFORCED CONCRETE CONSTRUCTION" AMERICAN WELDING SOCIETY AWS D1.4 WHERE REQUIRED, PROVIDE DOWELS TO MATCH SIZE AND SPACING OF MAIN REINFORCING.

9. REFER TO ARCHITECTURAL, MECHANICAL, ELECTRICAL AND PLUMBING DRAWINGS FOR ANY OTHER ADDITIONAL SLEEVES, ANCHORS, VENT OPENINGS, ETC., NOT SHOWN ON STRUCTURAL PLANS THAT MIGHT BE REQUIRED.

10. PLACE CONCRETE IN A MANNER SO AS TO PREVENT SEGREGATION OF THE MIX. DELAY FLOATING AND TROWELLING OPERATIONS UNTIL CONCRETE HAS LOST SURFACE WATER SHEEN OR ALL FREE WATER. DO NOT SPRINKLE FREE CEMENT ON THE SLAB SURFACE. FINISHING OF SLAB SURFACES SHALL COMPLY WITH THE RECOMMENDATIONS OF AC1 302.1 AND 304.

11. UNLESS NOTED OTHERWISE ON PLAN, CONTROL JOINTS IN SLAB ON GRADE TO BE LOCATED APPROXIMATELY 225 SQ. FT. GRIDS. ACTUAL LOCATION TO BE DETERMINED BY OWNER OR CONTRACTOR.

12. PROVIDE 7 DAY CURING OF SLAB IMMEDIATELY AFTER FINISHING, USING ONE OF THE FOLLOWING METHODS

    A. CONTINUOUSLY WATERED BURLAP

    B. WATERPROOF MEMBRANES

13. PROTECT THE CONCRETE SURFACE BETWEEN FINISHING OPERATIONS ON HOT, DRY WINDY DAYS OR ANY OTHER TIME THAT PLASTIC SHRINKAGE CRACKS COULD DEVELOP BY USING WET BURLAP, PLASTIC MEMBRANE OR FOGGING. PROTECT CONCRETE SLAB AT ALL TIMES FROM RAIN, HAIL OR OTHER INJURIOUS EFFECTS.

14. UNLESS SPECIFIED CONCRETE MUST REACH THE FOLLOWING PERCENTAGES OF ITS 28-DAY COMPRESSIVE STRENGTH (F'c), BEFORE FORMS MAY BE REMOVED. 40% WALLS, COLUMNS & BEAM SIDES, 70% JOISTS, PANS & BEAM BOTTOMS (IF RESHORED), 85% SHORING FOR FLOOR SYSTEMS (IF NOT SHORED)

15. AN INDEPENDENT CERTIFIED TESTING LABORATORY SHALL VERIFY AND PROVIDE REPORTS CERTIFYING THE FOLLOWING:

    A. CONCRETE PLANT BATCH TICKETS FOR EACH TRUCK TO VERIFY THAT THE CONCRETE MATCHES THE APPROVED DESIGN MIX.

    B. CONCRETE SLUMP IS IN ACCORDANCE WITH APPROVED DESIGN MIX.

    C. CONCRETE PLACEMENT PREPARATIONS ARE IN ACCORDANCE WITH ACI SPECIFICATIONS.

    D. CONTROL / CONTRACTION JOINTS ARE INSTALLED WITHIN THE ACI TIME ALLOWANCE.

    E. PROPER CURING METHODS ARE BEING UTILIZED.

16. NO CONCRETE SHALL BE PLACED OUTSIDE OF THESE SPECIFICATIONS WITHOUT THE ENGINEER'S APPROVAL, ANY ITEMS NOT IN COMPLIANCE WITH THE OUTLINED SPECIFICATION SHALL BE REPORTED TO THE ARCHITECT AND STRUCTURAL ENGINEER WITHIN 24 HOURS.

17. REFER TO ARCHITECTURAL DRAWINGS FOR WATER PROOFING REQUIREMENTS.

18. UNLESS OTHERWISE NOTED ALL VERTICAL REINFORCEMENT ON COLUMNS SHALL BE SPLICED A MINIMUM OF 36 BAR DIAMETERS.

19. THE SHORES FOR THE FLOOR SLAB & BEAMS SHALL BE ADEQUATE TO CARRY THE TOTAL WEIGHT OF THE SLAB SYSTEM TO THE GROUND, ALL SHORING / RESHORING DESIGN SHALL BE THE RESPONSIBILITY OF THE CONTRACTOR.

20. THERE SHALL BE NO HORIZONTAL CONSTRUCTION JOINTS IN CONCRETE POURS. ALL CONSTRUCTION JOINTS SHALL BE MADE IN THE MIDDLE OF THE SPAN. WHEN A BEAM INTERSECTS A GIRDER AT MIDDLE 1/3 OF SPAN, THE JOINTS SHALL BE OFFSET DISTANCE EQUAL TO TWICE THE WIDTH OF THE BEAM. THE LOCATION OF CONSTRUCTION JOINTS SHALL BE APPROVED BY THE STRUCTURAL ENGINEER. ADDITIONAL REINFORCING AT CONSTRUCTION JOINTS SHALL BE SPECIFIED BY THE BEGINNER, SEE TYPICAL DETAIL. PROVIDE 75 FEET MAXIMUM SPACING OF CONSTRUCTION JOINTS IN GRADE BEAMS.

21. THE MAXIMUM WATER TO CEMENT RATIO: 0.50 (MAX) FOR NON-AIR ENTRAINED. AND 0.48 (MAX) FOR AIR ENTRAINED.

22. MAX. AGGREGATE SIZE 3/4 INCH.

23. PROVIDE BAR SUPPORT ACCESSORIES IN ACCORDANCE WITH THE LATEST ACI MANUAL, STANDARD PRACTICE FOR DETAILING REINFORCED CONCRETE STRUCTURES, SUPPORT BEAM REINFORCING ON BEAMS BOLSTERS SPACED NOT MORE THAN 4 FEET ON CENTER.

24. PROVIDE BAR SUPPORTS WITH PLASTIC COATED LEGS OR HOT DIP GALVANIZING AFTER FABRICATION FOR CONCRETE EXPOSED TO VIEW. PROVIDE STAINLESS STEEL BAR SUPPORTS FOR CONCRETE TO RECEIVE A SAND BLAST FINISH.

25. FOR PIPE INSTALLED HORIZONTALLY WITHIN THE SLAB, PROVIDE MAXIMUMS OUTSIDE DIAMETER OF 30% OF SLAB THICKNESS. PLACE CONDUIT OR PIPE BETWEEN THE TOP AND BOTTOM LAYER OF REINFORCEMENT WITH THE CENTER THIRD OF SLAB, DO NOT SPACE CONDUITS OF PIPES CLOSER THAN THREE DIAMETERS OF WIDTHS ON CENTER.

26. CONTRACTOR AND SUPPLIER TO COORDINATE ADDITIONAL ADMIXTURES AND SUBMIT MIX DESIGNS AS REQUIRED FOR MASS CONCRETE. AFTER COMPLETION OF THE EQUIPMENT FOUNDATION, THE CONCRETE SHALL BE INSPECTED AND ALL CRACKS FROM SHRINKAGE AND CONSTRUCTION STRESS SHALL BE REPAIRED.

REINFORCED CONCRETE NOTES CONTINUED

TENSION DEVELOPMENT LENGTH ('ld')

BAR SIZE	f'c= 3000 PSI		f'c= 4000 PSI		f'c= 5000 PSI		f'c= 6000 PSI		f'c= 7000 PSI		f'c= 8000 PSI		f'c= 10000 PSI	
	ld TOP	ld BOT	ld TOP	ld BOT	ld TOP	ld BOT	ld TOP	ld BOT	ld TOP	ld BOT	ld TOP	ld BOT	ld TOP	ld BOT
#3	1'-9"	1'-4"	1'-6"	1'-2"	1'-5"	1'-1"	1'-3"	1'-0"	1'-2"	1'-0"	1'-1"	1'-0"	1'-0"	1'-0"
#4	2'-4"	1'-10"	2'-1"	1'-7"	1'-10"	1'-5"	1'-8"	1'-3"	1'-7"	1'-2"	1'-5"	1'-1"	1'-4"	1'-0"
#5	3'-0"	2'-3"	2'-7"	2'-0"	2'-4"	1'9"	2'-1"	1'-7"	2'-0"	1'-6"	1'-10"	1'-5"	1'-8"	1'-3"
#6	3'-7"	2'-9"	3'-11"	2'-4"	2'-9"	2'-1"	2'-6"	1'-11"	2'-4"	1'-10"	2'-2"	1'-8"	1'-11"	1'-6"
#7	5'-2"	4'-0"	4'-5"	3'-6"	4'-0"	3'-1"	3'-8"	2'-10"	3'-5"	2'-8"	3'-2"	2'-5"	2'-10"	2'-2"
#8	5'-11"	4'-7"	5'-2"	3'-11"	4'-7"	3'-6"	4'-2"	3'-3"	4'-0"	3'-1"	3'-8"	2'-10"	3'-3"	2'-6"
#9	6'-8"	5'-2"	5'-9"	4'-5"	5'-2"	4'-0"	4'-9"	3'-8"	4'-5"	3'-5"	4'-1"	3'-2"	3'-8"	2'-10"
#10	7'-6"	5'-10"	6'-6"	5'-0"	5'-10"	4'-6"	5'-4"	4'-1"	5'-0"	3'-10"	4'-7"	3'-7"	4'-2"	3'-2"
#11	8'-4"	6'-5"	7'-3"	5'-7"	6'-6"	5'-0"	5'-11"	4'-7"	5'-6"	4'-3"	5'-1"	3'-11"	4'-5"	3'-6"

NOTES:
1. TABULATED VALUES ARE APPLICABLE ONLY IF CLEAR SPACING OF BARS BEING DEVELOPED OR SPLICED IS NOT LESS THAN 'db', CLEAR COVER IS NOT LESS THAN 'db' AND STIRRUPS OR TIES THROUGHOUT 'ld' IS NOT LESS THAN CODE MINIMUM, OR CLEAR SPACING OF BARS BEING DEVELOPED OR SPLICED IS NOT LESS THAN 2" 'db' AND CLEAR COVER IS NOT LESS THAN 'db'. FOR OTHER CASES , MULTIPLY TABULATED VALUES BY 1.5.
2. 'TOP' BARS ARE HORIZONTAL REBARS WITH MORE THAN 12 IN OF FRESH CONCRETE CAST BELOW THE BARS AT THE DEVELOPMENT LENGTH.
3. FOR LIGHT WEIGHT CONCRETE MULTIPLY THE TABULATED VALUES BY 1.3.
4. FOR EPOXY COATED BARS, MULTIPLY THE TABULATED VALUES BY 1.5 FOR 'BOT' BARS, OR BY 1.3. FOR TOP BARS.
5. FOR REINFORCEMENT OTHER THAN GRADE 60, MODIFY THE TABULATED VALUES BY THE RATIO OF THE REINFORCEMENT YIELD STRENGTH DIVIDED BY 60 KSI.

TENSION LAP SPLICES-CLASS B- TOP & BOT BARS

BAR SIZE	f'c= 3000 PSI		f'c= 4000 PSI		f'c= 5000 PSI		f'c= 6000 PSI		f'c= 7000 PSI		f'c= 8000 PSI		f'c= 10000 PSI	
	TOP	BOT	TOP	BOT	TOP	BOT	TOP	BOT	TOP	BOT	TOP	BOT	TOP	BOT
#3	2'-4"	1'-9"	2'-0"	1'-6"	1'-10"	1'-5"	1'-8"	1'-4"	1'-7"	1'-4"	1'-5"	1'-4"	1'-3"	1'-0"
#4	3'-1"	2'-4"	2'-8"	2'-1"	2'-5"	1'-10"	2'-2"	1'-8"	2'-1"	1'-7"	1'-11"	1'-5"	1'-8"	1'-7"
#5	3'-10"	3'-0"	3'-4"	2'-7"	3'-0"	2'-4"	2'-9"	2'-1"	2'-7"	2'-0"	2'-4"	1'-10"	2'-1"	1'-8"
#6	4'-8"	3'-7"	4'-0"	3'-1"	3'-7"	2'-9"	3'-3"	2'-8"	2'-11"	2'-4"	2'-10"	2'-2"	2'-6"	1'-11"
#7	6'-9"	5'-2"	5'-10"	4'-6"	5'-3"	4'-0"	4'-9"	3'-8"	4'-6"	3'-5"	4'-2"	3'-2"	3'-8"	2'-10"
#8	7'-9"	5'-11"	6'-8"	5'-2"	6'-0"	4'-7"	5'-5"	4'-2"	5'-1"	3'-11"	4'-9"	3'-8"	4'-3"	3'-3"
#9	8'-8"	6'-8"	7'-6"	5'-2"	6'-9"	5'-2"	6'-2"	4'-9"	5'-9"	4'-5"	5'-4"	4'-1"	4'-9"	3'-8"
#10	9'-10"	7'-6"	8'-6"	5'-9"	7'-7"	5'-10"	6'-11"	5'-4"	6'-6"	5'-0"	6'-0"	4'-7"	5'-4"	4'-2"
#11	10'-11"	8'-4"	9'-5"	7'-3"	8'-5"	6'-6"	7'-8"	5'-11"	7'-2"	5'-6"	6'-8"	5'-1"	5'-11"	4'-5"

NOTES:
1. TABULATED VALUES ARE APPLICABLE ONLY IF CLEAR SPACING OF BARS BEING DEVELOPED OR SPLICED IS NOT LESS THAN 'db', CLEAR COVER IS NOT LESS THAN 'db' AND STIRRUPS OR TIES THROUGHOUT 'ld' IS NOT LESS THAN CODE MINIMUM, OR CLEAR SPACING OF BARS BEING DEVELOPED OR SPLICED IS NOT LESS THAN 2" 'db' AND CLEAR COVER IS NOT LESS THAN 'db'. FOR OTHER CASES , MULTIPLY TABULATED VALUES BY 1.5.
2. 'TOP' BARS ARE HORIZONTAL REBARS WITH MORE THAN 12 IN OF FRESH CONCRETE CAST BELOW THE BARS AT THE DEVELOPMENT LENGTH.
3. FOR LIGHT WEIGHT CONCRETE MULTIPLY THE TABULATED VALUES BY 1.3.
4. FOR EPOXY COATED BARS, MULTIPLY THE TABULATED VALUES BY 1.5 FOR 'BOT' BARS, OR BY 1.3. FOR TOP BARS.
5. FOR REINFORCEMENT OTHER THAN GRADE 60, MODIFY THE TABULATED VALUES BY THE RATIO OF THE REINFORCEMENT YIELD STRENGTH DIVIDED BY 60 KSI.
6. FOR CLASS 'A' SPLICE USE SAME AS TENSION DEVELOPMENT LENGTH.

"Ldh" TENSION DEPELOPMENT (EMBEDMENT) LENGTH FOR STANDARD END HOOKS (GRADE 60 BARS - NORMAL WEIGHT CONCRETE - GENERAL USE)

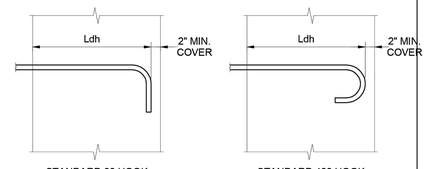

STANDARD 90 HOOK SIDE COVER > 21/2" | STANDARD 180 HOOK SIDE COVER > 21/2"

BAR SIZE	fc=3000 psi Ldh	fc=4000 psi Ldh	fc=5000 psi Ldh	fc=6000 psi Ldh
# 3	9"	7"	7"	6"
# 4	11"	10"	9"	8"
# 5	1'-2"	1'-0"	11"	10"
# 5	1'-5"	1'-3"	1'-1"	1'-0"
# 6	1'-7"	1'-5"	1'-3"	1'-2"
# 7	1'-10"	1'-7"	1'-5"	1'-4"
# 8	2'-1"	1'-10"	1'-7"	1'-6"
# 9	2'-4"	2'-0"	1'-10"	1'-8"
# 10	2'-8"	2'-2"	2'-0"	1'-10"

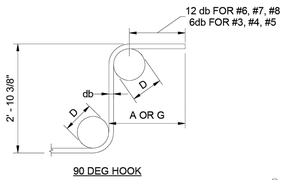

90 DEG HOOK

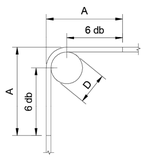

CORNER TIE HOOK

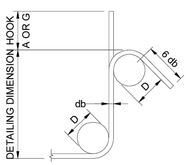

135 DEG HOOK

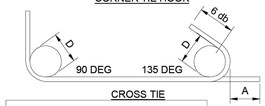

CROSS TIE

STIRRUP & TIE HOOK TYPES

BAR SIZE	D (IN.)	90 DEG HOOK A OR G (IN.)	135 DEG HOOK A OR G (IN.)
#3	1 1/2	4	4
#4	2	4 1/2	4 1/2
#5	2 1/2	6	5 1/2

APP. | DATE | REVISION | NO.

P.E. SEAL REQUIRED
PRELIMINARY
SUBJECT TO REVISION

This document is released for informational purposes under the authority of DAVID MOORE P.E. 139405 on 12/11/2025 It is not to be used for regulatory approval, permit, bidding, or construction purposes.

CONCEPT ENGINEERS
TX. FIRM REGISTRATION # F-04417
Structures for the whole community

IDS Engineering Group
13430 NW. Freeway
Suite 700
Houston, Tx. 77040
713.462.3178
TxEng Firm 2726
TxSurv Firm 10110700

CITY OF HOUSTON
HOUSTON PUBLIC WORKS

LIFT STATION RENEWAL AND REPLACEMENT FY 2023

GENERAL NOTES

WBS NUMBER	R-000267-0179-4
DRAWING SCALE	AS NOTED
CITY OF HOUSTON PM	NAWARAJ PANTA, P.E.
DWG. NO.	MKT-S-02
SHEET NO.	164 OF 321

FOR CITY OF HOUSTON USE ONLY

STRUCTURAL STEEL NOTES

1. ALL STRUCTURAL STEEL MEMBERS SHALL CONFORM TO THE FOLLOWING DESIGNATION

W SHAPES	ASTM A992		(50KSI)
SQUARE RECTANGULAR TUBES	ASTM A500	GR. C	(50 KSI)
ROUND TUBES (HSS)	ASTM A500	GR. C	(46 KSI)
STEEL PIPES	ASTM A53	GR. B	(35 KSI)
CHANNELS	ASTM A36		(36 KSI)
PLATES, ANGLES, MISC, STEEL	ASTM A36		(36 KSI)
ANCHOR RODS	ASTM F1554	GR.36	(36 KSI)
HARDENED STEEL WASHERS	ASTM F436		
HEAVY HEX NUTS	ASTM A563		
SEE NOTE 16			

2. ALL STRUCTURAL STEEL SHALL BE DETAILED FABRICATED AND ERECTED IN ACCORDANCE WITH A.I.S.C. STANDARDS 15th EDITION.

3. FOR ALL HIGH STRENGTH BOLTS, HARDENED WASHERS SHALL BE PROVIDED ON NUT SIDE OF BOLT FOR TORQUING AS REQUIRED.

4. ALL WELDING SHALL CONFORM TO STANDARD OF THE AMERICAN WELDING SOCIETY, AWS D1.1 LATEST EDITION STRUCTURAL WELDING CODE

5. E70 ELECTRODES FOR ALL FIELD AND SHOP WELDING SHALL CONFORM TO ANSI/AWS D1.1 LATEST EDITION UNLESS NOTED OTHERWISE ALL WELD SIZES SHALL BE PER AISC CODE. REFER TO NOTE 17 FOR ADDITIONAL INFORMATION.

6. SPLICING STRUCTURAL MEMBERS IS PROHIBITED WITHOUT PRIOR APPROVAL OF THE STRUCTURAL ENGINEER.

7. ANY TEMPORARY SHORING OR BRACING DURING THE CONSTRUCTION PHASE BEFORE COMPLETION OF CONNECTIONS IS THE RESPONSIBILITY OF THE CONTRACTOR.

8. IF NOT SHOWN ON THE DRAWINGS, SUPPORT OF METAL DECK AROUND COLUMN CLOSURE, SCREED PLATES AROUND THE OPENINGS AND EDGE OF SLAB SHALL BE PROVIDED BY THE CONTRACTOR.

9. ALL FIELD CONNECTIONS TO BOLTED WITH A325 BOLTS. BOLTS TO BE LEJEUNE TYPE OR EQUAL. PROVIDE MINIMUM OF TWO BOLTS PER CONNECTION, MINIMUM BOLT DIAMETER 3/4".

10. ALL EXPOSED STEEL SHALL BE HOT DIPPED GALVANIZED.

11. THE BEAM-TO-BEAM AND BEAM-TO-COLUMN SIMPLE SHEAR CONNECTIONS SHOULD DEVELOP THE END REACTION OF THE CONNECTED BEAM. THE END REACTION OF THE CONNECTED BEAM CAN BE OBTAINED FROM THE LOAD CARRYING CAPACITY OF THE BEAM ON THE BASIS OF EQUIVALENT UNIFORM LOADS GIVEN IN THE PART 3 OF AISC MANUAL LATEST EDITIONS (UNLESS LARGER REACTION IS SHOWN ON DRAWINGS). THE MINIMUM SHEARING CAPACITY OF 15 KIPS SHALL BE PROVIDED FOR ALL BEAMS. REFER TO NOTE 22 FOR COMPOSITE BEAM CONNECTION REQUIREMENTS.

12. THE DESIGN OF STRUCTURAL STEEL CONNECTIONS IS THE RESPONSIBILITY OF THE CONTRACTOR AND THE STEEL FABRICATOR. THE DESIGN OF STEEL CONNECTIONS SHALL BE PERFORMED BY A REGISTERED PROFESSIONAL ENGINEER, AND SHALL BE SUBMITTED TO THE ENGINEER OF RECORD FOR REVIEW.

13. STEEL BEAM BEARING ON MASONRY SHALL HAVE A MINIMUM OF 8" BEARING AND ANCHOR AS SHOWN ON THE DRAWINGS, MASONRY SHALL ALSO HAVE SOLID MASONRY OR FULLY GROUTED CELLS FROM STEEL BEARING TO GRADE BEAM BELOW.

14. UNLESS OTHERWISE NOTED, ALL MOMENT CONNECTIONS SHALL BE MADE WITH FULL PENETRATION WELD AND SHALL BE DESIGNED TO DEVELOP FULL CAPACITY OF THE MEMBER.

15. ANY MISCELLANEOUS STEEL NOT SHOWN ON THE PLANS, BUT REQUIRED DUE TO COORDINATION BETWEEN DIFFERENT DISCIPLINES SHALL BE INCLUDED BY THE CONTRACTOR IN THEIR BID.

16. CONNECTION MATERIALS
    a. BEAM, COLUMNS, STIFFENER PLATES AND DOUBLE PLATES TO MATCH GRADE STEEL OF STRUCTURAL ELEMENT
    b. ALL CONNECTION MATERIALS, EXCEPT AS OTHERWISE NOTED HEREIN OR IN THE DRAWINGS, INCLUDING BEARING PLATES, GUSSET PLATES, STIFFENER PLATES, ETC. ASTM A36

17. WELD MINIMUM SIZE & STRENGTH
    a. PROVIDE MINIMUM SIZE OF FILLET WELDS AS SPECIFIED IN TABLE J2,4 OF AISC MANUAL.
    b. PROVIDE MINIMUM EFFECTIVE THROAT THICKNESS OF PARTIAL PENETRATION GROOVE WELDS AS SPECIFIED ON TABLE J2.3 OF AISC MANUAL
    c. DEVELOP THE FULL TENSILE STRENGTH OF THE MEMBER ELEMENT JOIN ON ALL SHOP AND FIELD WELDS U.N.O.
    d. WHERE CONNECTIONS ARE NOTED ON DRAWINGS AS MOMENT CONNECTIONS PROVIDE WELDS TO DEVELOP FULL FLEXURAL CAPACITY OF THE LESSER MEMBER.

18. PROVIDE BOLTS, NUTS AND WASHERS THAT ARE HOT DIPPED GALVANIZED ACCORDING TO ASTM A153, CLASS C WHEN USED TO CONNECT STEEL ELEMENTS THAT ARE HOT DIP GALVANIZED AFTER FABRICATION.

19. FABRICATE AND ASSEMBLE STRUCTURAL MEMBERS/ASSEMBLIES IN SHOP TO GREATEST EXTEND POSSIBLE.

20. IF CAMBER OF STRUCTURAL MEMBERS IS INDICATED ON THE DRAWINGS WHERE POSSIBLE, CAMBER OF BEAMS TO BE APPLIED BY COLD BEND PROCESS, CAMBER INDICATED IN THE DRAWINGS ARE INTENDED TO BE FINAL CAMBER AT THE TIME OF ERECTION, AND WITHIN TOLERANCE O MINUS ZERO TO PLUS 1/8" FOR EACH TEM FEET OF MEMBER LENGTH. ALL BEAMS SHALL BE INSTALLED SO THAT NATURAL OF SPECIFIC CAMBER IS ORIENTED UPWARDS.

21. CONTRACTOR SHALL BE RESPONSIBLE FOR ALL ERRORS OF DETAILING ON THE SHOP DRAWINGS, ERRORS IN FABRICATION, AND THE CORRECT FITTING OF STRUCTURAL STEEL MEMBERS.

22. FIELD MODIFICATION TO STRUCTURAL STEEL IS PROHIBITED WITHOUT PRIOR APPROVAL BY THE E.O.R.

23. CLEAN STEEL OF RUST, LOSE MILL SCALE AND OTHER FOREIGN MATERIALS WHERE REQUIRED FOR FABRICATION, FITTING UP. OR WELDING.

24. DO NOT CUT STRUCTURAL STEEL MEMBERS FOR THE WORK OF OTHER TRADES WITHOUT PRIOR REVIEW AND APPROVAL OF THE E.O.R.

25. AFTER FABRICATION, HOT DIP GALVANIZE STRUCTURAL STEEL AND THEIR CONNECTIONS PERMANENTLY EXPOSED TO THE OUTSIDE, SUCH ITEMS INCLUDE BUT ARE NOT LIMITED TO:

    1. SHELF ANGLES
    2. PARAPET WALL SUPPORTING MEMBERS
    3, SCREEN WALL SUPPORTING MEMBERS
    4. EMBEDDED PLATES IN CONCRETE
    5. BUILDING CLADDING SUPPORT STEEL.

26. EXAMINE THE ARCHITECTURAL AND STRUCTURAL DRAWINGS FOR OTHER ITEMS THAT REQUIRE HOT DIPPED GALVANIZATION

27. PROVIDE NON-SHRINK NON-METALLIC GROUT FOR BASE PLATES WITH MINIMUM 28 DAYS COMPRESSIVE STRENGTH OF 6000 PSI COMPLETE GROUT WORK BEFORE ROOF CONCENTRATED POURING OF A SINGLE STORY BUILDING.

28. STRUCTURAL STEEL CONNECTIONS NOT COMPLETELY DETAILED ON THE DRAWINGS, INCLUDING MATERIAL GRADE & SIZES, WELD SIZES AND NUMBER OF BOLTS SHALL BE DESIGNED BY THE CONTRACTOR UNDER SUPERVISION OF REGISTERED PROFESSIONAL ENGINEER WHO IS REGISTERED ON THE STATE OF TEXAS AN EMPLOYED BY STEEL FABRICATOR, DESIGN CALCULATIONS TO BE SEALED BY FABRICATOR'S REGISTERED PROFESSIONAL ENGINEER, SHOP DRAWINGS SUBMITTED WITHOUT COMPLETE DESIGN CALCULATIONS WILL NOT BE REVIEWED. WHERE PREDESIGNED CONNECTIONS ARE TAKEN DIRECTLY FROM TABLES IN AISC MANUAL. CALCULATIONS NEED TO BE SUBMITTED PROVIDED JOB DESIGN CONDITIONS PRECISELY MATCH THOSE ASSUMED IN THE AISC MANUAL.

29. FURNISH SHOP DRAWINGS FOR E.O.R.'S REVIEW PRIOR TO FABRICATION. INCLUDE WELDING PROCEDURES, TESTING PROGRAMS FOR WELDING AND HIGH STRENGTH BOLTING, COATING MATERIAL, AND ERECTION SEQUENCE IN SHOP DRAWINGS.

30. MILL STEEL COLUMNS ENDS TO FIT FLUSH WITH BASE PLATE, AND END PLATES, FIELD ASSEMBLY OF THESE STEEL ELEMENTS TO THE COLUMNS IS PROHIBITED.

31. PROVIDE HEADED STUDS (SHEAR AND ANCHOR) MADE OF MATERIAL CONFORMING TO AWS D1.1 CLAUSE 9.2.6.

32. PROVIDE DEFORMED ANCHORS MADE OF MATERIAL CONFORMING TO ASTM A1064.

33. WELD STUDS ACCORDING TO MANUFACTURER'S RECOMMENDATIONS. MANUAL ARC (STICK) WELDING OF HEADED STUDS AND/OR DEFORMED ANCHORS IS NOT ALLOWED.

34. PRIOR TO DECK PLACEMENT, VERIFY THAT STEEL BEAMS BEARING ON MASONRY HAVE 6" MINIMUM BEARING AND ARE ANCHORED S SHOWN ON DRAWINGS.

EXISTING CONSTRUCTION NOTES

1. BEFORE PROCEEDING WITH ANY WORK WITHIN THE EXISTING FACILITY, THE CONTRACTOR SHALL FAMILIARIZE HIMSELF WITH EXISTING STRUCTURAL AND OTHER CONDITIONS. IT SHALL BE THE CONTRACTOR'S RESPONSIBILITY TO PROVIDE ALL NECESSARY BRACING, SHORING, AND OTHER SAFEGUARDS TO MAINTAIN ALL PARTS OF THE EXISTING WORK IN A SAFE CONDITION DURING THE PROCESS OF CONSTRUCTION, AND TO PROTECT FROM DAMAGE THOSE PORTIONS OF THE EXISTING WORK WHICH ARE TO REMAIN.

2. THE CONTRACTOR SHALL FIELD VERIFY THE DIMENSIONS, ELEVATIONS, ETC. NECESSARY FOR THE PROPER CONSTRUCTION AND ALIGNMENT OF THE NEW PORTIONS OF THE WORK TO THE EXISTING WORK. THE CONTRACTOR SHALL MAKE ALL MEASUREMENTS NECESSARY FOR FABRICATION AND ERECTION OF STRUCTURAL MEMBERS. ANY DISCREPANCY SHALL BE IMMEDIATELY BROUGHT TO THE ATTENTION OF THE ENGINEER.

3. WELDING TO AND WITHIN AN EXISTING FACILITY PRESENTS POTENTIAL HAZARDS, INCLUDING:
    A. FIRE HAZARD DUE TO THE EXISTING CONSTRUCTION AND BUILDING CONTENTS.
    B. STRUCTURAL LIQUEFACTION DUE TO WELDING ACROSS THE FULL SECTION OF STRUCTURAL MEMBERS.

    RECOMMENDATIONS TO PREVENT THESE HAZARDS INCLUDE:
    A. PROTECT EXISTING COMBUSTIBLES PRIOR TO WELDING. KEEP A SEPARATE WATCHMAN AND SEVERAL FIRE EXTINGUISHERS ON HAND
    B. WELD IN SMALL INCREMENTS. ALLOW WELDS TO HARDEN BEFORE CONTINUING TO THE NEXT INCREMENT.
    C. DO NOT LEAVE THE SITE UNTIL SATISFIED THAT NO FIRE HAZARD EXISTS.

4. THE CONTRACTOR SHALL BE RESPONSIBLE FOR THE DESIGN AND ERECTION OF ALL SHORING NECESSARY TO SAFEGUARD THE EXISTING STRUCTURE. THE CONTRACTOR SHALL SUBMIT A DETAILED PLAN FOR SHORING, BRACING, AND PROTECTION OF THE EXISTING CONSTRUCTION.

DEMOLITION NOTES

1. PERFORM DEMOLITION IN A CAREFUL AND CONTROLLED MANNER TO PREVENT DAMAGE TO EXISTING STRUCTURES , UTILITES AND IMPROVEMENTS TO REMAIN.

2. CONTRACTOR SHALL BE SOLEY RESPONSIBLE FOR ALL MEANS, METHODS, SEQUENCES . PROCEDURES, AND SAFETY PRECAUTIONS ASSOCIATED WITH DEMOLITION. ENGINEER'S DRAWINGS INDICATE LIMITS OF DEMOLITION ONLY AND DO NOT PRESCRIBE HOW DEMOLITION IS TO BE PERFORMED.

3. VERIFY FIELD CONDITIONS PRIOR TO STARTING WORK. PROVIDE ALL NECESSARY BRACING, SHORING, AND TEMPORARY SUPPORTS TO PREVENT MOVEMENT OR DAMAGE TO ADJACENT OR REMAINING STRUCTURES.

4. IMMEDIATELY CEASE OPERATIONS AND NOTIFY OWNER AND ENGINEER IF MOVEMENT, SETTLEMENT, OR UNSAFE CONDITIONS ARE OBSERVED DO NOT RESUME WORK UNTIL SAFETY HAS BEEN RESTORED.

5. REMOVE ONLY PORTIONS OF CONSTRUCTION INDICATED ON THE DRAWINGS. WHERE LIMITS ARE UNCLEAR, CONFIRM EXTENT OF REMOVAL WITH ENGINEER PRIOR TO PROCEEDING.

6. PERFORM ALL WORK IN ACCORDANCE WITH LOCAL, STATE AND FEDERAL REGULATIONS INCLUDING OSHA REQUIREMENTS. MAINTAIN SAFE ACCESS AND CONTROL DUST, DEBRIS, AND NOISE AT ALL TIMES.

7. REPAIR OR REPLACE, AT NO COST TO THE OWNER, ANY DAMAGE RESULTING FROM DEMOLITION OPERATIONS OR DEMOLITION PERFORMED BEYOND THE LIMITS INDICATED.

8. ENGINEER'S RESPONSIBILITY IS LIMITED TO DEFINING THE EXTENT OF DEMOLITION. CONTRACTOR SHALL BE FULLY RESPONSIBLE FOR MEANS, METHODS SAFETY AND PRTECTION OF EXISTING STRUCTURES AND FACILITIES.

STRUCTURAL ABBREVIATIONS

AB	ANCHOR BOLT	FLR	FLOOR	PERP	PERPENDICULAR
ALT	ALTERNATIVE	FOM	FACE OF MASONRY	PL	PLATE
ALUM	ALUMINUM	FS	FAR SIDE	PLUMB	PLUMBING
ARCH	ARCHITECTURAL	FT	FOOT	PNL	PANEL
B	BOTTOM	FTG	FOOTING	POLY	POLYETHYLENE
B/	BOTTOM OF	FUT	FUTURE	PREFAB	PREFABRICATED
BLDG	BUILDING	GA	GAGE	PSF	POUNS PER SQUARE FOOT
BM	BEAM	GALV	GALVANIZED	PSI	POUNS PER SQUARE INCH
B/BOT	BOTTOM	GYP	GYPSUM	QTY	QUANTITY
BRG	BEARING	HORIZ	HORIZONTAL	R	RADIUS
C	CHANNEL SHAPE	HP	HIGH POINT	RE	CALLED RIGHT END
C TO C	CENTER TO CENTER	HSS	HOLLOW STRUCTURAL SECTION	RE:	REFERENCE
CANT	CANTILIVER	HT	HEIGHT	REINF	REINFORCE (MENT) (D)
CJ	CONTROL JOINT	IN	INCH	REQ	REQUIRE
CONST JT	CONSTRUCTION JOINT	INFO	INFORMATION	REQD	REQUIRED
CL	CENTER LINE	INT	INTERIOR	REV	REVISION
CLR	CLEAR	INSUL	INSULATION	SCHED	SCHEDULE
CMU	CONCRETE MASONRY UNIT	JB	JOIST BOTTOM / SEAT ELEVATION	SF	SQUARE FOOT
COL	COLUMN	JST	JOIST	SHT	SHEET
CONC	CONCRETE	JT	JOINT	SI	SQUARE INCH
CONN	CONNECTION	K	KIPS	SIM	SIMILAR
CONST	CONSTRUCTION	KO	KNOCK OUT	SL	SLOPE
CONT	CONTINUOUS	KSF	KIPS PER SQUARE FOOT	SOG	SLAB ON GRADE
COORD	COORDINATE	KSI	KIPS PER SQUARE INCH	SPA	SPACES (D)
CTR	CENTER	L	ANGLE	SPEC	SPECIFICATION
CTRD	CENTERED	LB	POUND	STD	STANDARD
D	DEPTH	LE	LEFT END	STIFF	STIFFENER
DBA	DEFORMED ANCHOR BAR	LG	LONG	STL	STEEL
DBL	DOUBLE	LLH	LONG LEG HORIZONTAL	SW	SHORTWAY
DBL TEE	PRECAST DOUBLE TEE	LLV	LONG LEG VERTICAL	SYM	SYMETRICAL
DIA	DIAMETER	LSH	LONG SIDE HORIZONTAL	T	TOP
DIAG	DIAGONAL	LSV	LONG SIDE VERTICAL	T/	TOP OF
DIM	DIMENSION	LP	LOW POINT	T&B	TOP AND BOTTOM
DN	DOWN	LW	LONG WAY	THK	THICK
DTL	DETAIL	M	MIDDLE	TOF	TOP OF FOOTING
DWG	DRAWING	MANUF/MFR	MANUFACTER	TOJ	TOP OF JOIST
DWL	DOWEL	MATL	MATERIAL	TOS	TOP OF STEEL
EA	EACH	MAX	MAXIMUM	TRANSV	TRANSVERSE
EE	EACH END	MECH	MECHANICAL	TYP.	TYPICAL
EF	EACH FACE	MEP	MECHANICAL/ELECTRICAL/ PLUMBING	UON	UNLESS OTHERWISE NOTED
EJ	EXPANSION JOINT			VERT	VERTICAL
EL/ELEV	ELEVATION	MEZZ	MEZZANINE	WF	WIDE FLANGE SHAPE
EOR	ENGINEER OF RECORD	MIN	MINIMUM	W/	WITH
EOS	EDGE OF SLAB	MISC	MISCELLANEOUS	W/O	WITHOUT
EQ	EQUAL	MO	MASONRY OPENING	WP	WORK POINT
EQUIP	EQUIPMENT	MSL	MEAN SEA LEVEL	WS	WATERSTOP
ES	EACH SIDE	MTL	METAL	WT	T SHAPE
EW	EACH WAY	NO	NUMBER	WWF	WELDED WIRE FABRIC
EXIST	EXISTING	NS	NEAR SIDE	&	AND
EXP	EXPANSION	N.T.S.	NOT TO SCALE	@	AT
EXT	EXTERIOR	OC	ON CENTER	Ø	DIAMETER
FD	FLOOR DRAIN	OC EW	ON CENTER EACH WAY	#	NUMBER
FDN	FOUNDATION	OPNG	OPENING	±	PLUS/MINUS
FL	FULL LENGTH	OPP	OPPOSITE		
FF	FINISH FLR	PEMB	PREENGINEERRED METAL BUILDING		

NO.	DATE	REVISION	APP.

P.E. SEAL REQUIRED

PRELIMINARY

SUBJECT TO REVISION

This document is released for informational purposes under the authority of DAVID MOORE P.E. 139405 on 12/11/2025 It is not to be used for regulatory approval, permit, bidding, or construction purposes.

CONCEPT ENGINEERS

TX. FIRM REGISTRATION # F-04417

Structures for the whole community

IDS Engineering Group

13430 NW. Freeway
Suite 700
Houston, Tx. 77040
713.462.3178

TxEng Firm 2726
TxSurv Firm 10110700

CITY OF HOUSTON

HOUSTON PUBLIC WORKS

LIFT STATION RENEWAL AND REPLACEMENT FY 2023

GENERAL NOTES

WBS NUMBER	FOR CITY OF HOUSTON USE ONLY
R-000267-0179-4	
DRAWING SCALE	
AS NOTED	
CITY OF HOUSTON PM	
NAWARAJ PANTA, P.E.	
DWG. NO. MKT-S-03	SHEET NO. 165 OF 321

SPECIAL INSPECTIONS NOTES

THE FOLLOWING STATEMENT AND SCHEDULES OF INSPECTIONS OUTLINE THE SPECIAL INSPECTIONS AND TESTS NECESSARY FOR THIS PROJECT.
THE GENERAL CONTRACTOR SHALL HIRE AN "APPROVED AGENCY" PER THE INTERNATIONAL BUILDING CODE (IBC) SECTION 1703 TO PROVIDE SPECIAL INSPECTIONS FOR THIS PROJECT. THE QUALIFIED SPECIAL INSPECTOR SHALL REFERENCE THESE PLANS AND CHAPTER 17 OF THE IBC FOR ALL SPECIAL INSPECTION REQUIREMENTS. SPECIAL INSPECTION REPORTS SHOULD BE SUBMITTED WEEKLY.
THE APPROVED AGENCY SHALL SUBMIT COPIES OF ALL INSPECTION REPORTS TO THE ARCHITECT/ENGINEER AND THE AUTHORITY HAVING JURISDICTION (BUILDING OFFICIAL) FOR REVIEW. THE SPECIAL INSPECTION SHALL BRING DISCREPANCIES TO THE IMMEDIATE ATTENTION OF THE GENERAL CONTRACTOR FOR CORRECTION. IF THE DISCREPANCIES ARE NOT CORRECTED, THE DISCREPANCIES SHALL BE BROUGHT TO THE ATTENTION OF THE BUILDING OFFICIAL AND TO THE ARCHITECT PRIOR TO THE COMPLETION OF THAT PHASE OF THE WORK. IN ADDITION TO SPECIAL INSPECTION REPORTS AND TESTS, SUBMIT REPORTS AND CERTIFICATES NOTED IN IBC 1704.5 TO THE AUTHORITY HAVING JURISDICTION. FINAL REPORTS DOCUMENTING SPECIAL INSPECTIONS AND TESTS MUST BE SUBMITTED TO THE BUILDING OFFICIAL PER IBC 1704.2.4.

STATEMENT OF SPECIAL INSPECTIONS:

THIS SPECIAL INSPECTIONS STATEMENT HAS BEEN PREPARED WITH THE UNDERSTANDING THAT SEOR AND THE BUILDING OFFICIAL REPRESENTATIVE WILL:

- REVIEW AND ACCEPT THE QUALIFICATIONS OF THE SPECIAL INSPECTORS
- OBSERVE THE SPECIAL INSPECTION OPERATIONS TAKING PLACE AT THE PROJECT SITE TO ENSURE THAT THE SPECIAL INSPECTORS ARE COMPETENT AND CARRYING OUT THEIR ASSIGNED RESPONSIBILITIES AS SPECIFIED IN THIS STATEMENT.
- REVIEW ALL THE SPECIAL INSPECTION REPORTS THAT THE SPECIAL INSPECTOR HAS PROVIDED THEM WITH.
- CONDUCT INSPECTIONS AS SPECIFIED BY IBC SECTION 110.3

THE FOLLOWING SPECIAL INSPECTIONS APPLY TO THIS PROJECT:

- SPECIAL INSPECTIONS FOR STANDARD BUILDINGS PER IBC 1705.1 [REQUIRED]
- STORM SHELTER INSPECTIONS SHALL MATCH THE REQUIREMENTS OF THE HOST BUILDING PER SECTION 106 OF 2020 ICC-500. [REQUIRED]

SPECIAL INSPECTION OF SHOP-FABRICATED GRAVITY LOAD-BEARING MEMBERS AND ASSEMBLIES:

SPECIAL INSPECTION OF SHOP-FABRICATED GRAVITY LOAD BEARING MEMBERS & ASSEMBLIES SHALL BE PERFORMED BY THE SPECIAL INSPECTOR AS STATED IN SECTION 1704.2.5, WHICH INCLUDES THE FOLLOWING:

- BEFORE FABRICATION BEGINS, SPECIAL INSPECTORS REPRESENTING THE GENERAL CONTRACTOR NEED TO VISIT THE FABRICATOR'S SHOP TO VERIFY THAT THE FABRICATOR HAS DETAILED FABRICATION AND QUALITY CONTROL (QC) PROCEDURES IN PLACE. THESE PROCEDURES SHOULD COVER INSPECTION, WORKMANSHIP CONTROL, MATERIAL CONTROL, AND THE FABRICATOR'S ABILITY TO ADHERE TO THE APPROVED CONSTRUCTION DOCUMENTS AND REFERENCED STANDARDS.
- THE FABRICATOR MUST HAVE DETAILED PROCEDURES FOR MATERIAL CONTROL AVAILABLE FOR THE INSPECTOR TO REVIEW. THESE PROCEDURES SHOULD SHOW THAT THE FABRICATOR CAN MAINTAIN ACCURATE RECORDS AND PROCESSES SO THAT AT ANY POINT DURING FABRICATION, THE MATERIAL SPECIFICATION, GRADE, AND RELEVANT TEST REPORTS FOR PRIMARY LOAD-CARRYING MEMBERS CAN BE IDENTIFIED.

SPECIAL INSPECTION OF STRUCTURAL STEEL:

AS PER IBC SECTION 1705.2.1, A QUALIFIED SPECIAL INSPECTOR OF AN "APPROVED AGENCY" PROVIDING QUALITY ASSURANCE (QA) SPECIAL INSPECTIONS FOR THE PROJECT SHALL REVIEW AND CONFIRM THE FABRICATOR AND ERECTOR'S QUALITY CONTROL (QC) PROCEDURES FOR COMPLETENESS AND ADEQUACY RELATIVE TO AISC 360-16 CHAPTER N, AISC 303-16 CODE OF STANDARD AND PRACTICE, AWS D1.1-2015 STRUCTURAL WELDING CODE, AND 2018 IBC CODE REQUIREMENTS FOR THE FABRICATOR'S SCOPE OF WORK.

- QA AGENCY PROVIDING SPECIAL INSPECTIONS MUST EMPLOY PERSONNEL WHO MEET THE MINIMUM QUALIFICATION REQUIREMENTS FOR INSPECTION AND NONDESTRUCTIVE TESTING (NDT) AS PER AISC 360 SECTION N4.
- ENSURE THE FABRICATOR AND ERECTOR QUALITY CONTROL (QC) PROGRAM COMPLIES WITH AISC 360 SECTION N2.
- QC AND QA PERSONNEL SHALL INSPECT WELDS AND BOLTS PER THE SCHEDULE OF SPECIAL INSPECTIONS BELOW.
- ALL AWS D1.1 STRUCTURAL WELDING CODE PROVISIONS FOR STATICALLY LOADED STRUCTURES SHALL APPLY.
- NONDESTRUCTIVE TESTING (NDT) OF WELDS:
  - NON-DESTRUCTIVE TESTING (NDT) OF WELDED JOINTS PER AISC 360 N5.5
  - RISK CATEGORY FOR DETERMINATION OF THE EXTENT OF NDT PER AISC 360 N5.5B IS NOTED IN THE DESIGN CRITERIA AND LOADS SECTION OF THESE GENERAL REQUIREMENTS. NDT MUST BE DOCUMENTED, AND REPORTS SHOULD SPECIFY THE TESTED WELD BY PIECE MARK AND LOCATION.
- ADDITIONAL INSPECTION TASKS PER AISC 360 SECTION N5.8.

POST-INSTALLED ANCHORS TO CONCRETE AND MASONRY: SHALL COMPLY WITH IBC SECTION 1703. INSPECTIONS MUST COMPLY WITH THE REQUIREMENTS IN THE APPROVED ICC EVALUATION REPORT AND THE DESIGN REQUIREMENTS SPECIFIED ON THE DRAWINGS. REFER TO THE POST INSTALLED ANCHORS SECTION OF THESE NOTES FOR ANCHORS THAT ARE THE BASIS OF THE DESIGN. THE SPECIAL INSPECTOR MUST ENSURE THAT THE ANCHORS ARE IN ACCORDANCE WITH THE POST-INSTALLED ANCHORS SECTION OF THESE NOTES OR AS SPECIFICALLY INDICATED ON THE DRAWINGS. SUBSTITUTIONS MUST BE APPROVED BY THE SER AND REQUIRE SUPPORTING CALCULATIONS AND THE CURRENT 2018 IBC-RECOGNIZED ICC EVALUATION SERVICES (ES) REPORT. SPECIAL INSPECTORS MUST DOCUMENT COMPLIANCE WITH ALL ELEMENTS REQUIRED IN THE RELEVANT ICC EVALUATION SERVICES (ES) REPORT IN THEIR SPECIAL INSPECTION REPORT.

PREFABRICATED CONSTRUCTION: ALL PREFABRICATED CONSTRUCTION SHALL CONFORM TO IBC SECTION 1703.

PER THE ICC-500, SECTION 111.1 STRUCTURAL OBSERVATION :

DURING CONSTRUCTION OF THE STORM SHELTER, THE BUILDING OWNER SHALL EMPLOY A REGISTERED DESIGN PROFESSIONAL TO CONDUCT VISUAL OBSERVATIONS OF THE CONSTRUCTION OF THE STRUCTURAL SYSTEM FOR GENERAL CONFORMANCE TO THE APPROVED CONSTRUCTION DOCUMENTS AT SIGNIFICANT CONSTRUCTION STAGES AND AT COMPLETION OF THE CONSTRUTION OF THE STRUCTURAL SYSTEM.

STRUCTURAL OBSERVATION SHALL NOT OBVIATE THE NEED FOR OTHER INSPECTIONS OR TESTING REQUIRED BY THIS STANDARD OR APPLICABLE CODE.

DEFICIENCIES SHALL BE REPORTED IN WRITING TO THE ATHORITY HAVING JURISDICTION AND OWNER OR THE OWNER'S AUTHORIZED AGENT. AT THE CONCLUSION OF THE WORK, THE REGISTERED DESIGN PROFESSIONAL WHO MADE THE STRUCTURAL OBSERVATIONS SHALL SUBMIT TO THE AUTHORITY HAVING JURISDICTION A WRITTEN STATEMENT THAT THE SITE VISITS HAVE BEEN MADE AND SHALL IDENTIFY ANY REPORTED DEFICIENCIES THAT, TO THE BEST OF THE STRUCTURAL OBSERVER'S KNOWLEDGE, HAVE NOT BEEN RESOLVED.

SECTION 110
SPECIAL INSPECTIONS

110.1 SPECIAL INSPECTIONS

SPECIAL INSPECTION SHALL BE PROVIDED IN ACCORDANCE SITH THIS SECTION, IN ADDITION TO THOSE REQUIRED BY THE *AUTHORITY HAVING JURISDICTION* IN ACCORDANCE WITH THE *APPLICABLE CODE*. ONE STATEMENT OF *SPECIAL INSPECTIONS* SHALL BE PERMITTED TO APPLY TO BOTH *HOST BUILDING* AND *STORM SHELTER* CONSTRUCTION.

EXCEPTION: PREFABRICATED OR PANELIZED *STORM SHELTER* COMPONENTS THAT HAVE BEEN INSPECTED AND *LABELED* BY AN *APPROVED AGENCY* MEETING THE REQUIREMENTS OF THE *APLICABLE CODE*.

110.1.2 SPECIAL CASES

SPECIAL INSPECTIONS SHALL BE PROVIDED FOR PROPOSED WORK COMPRISED OF THE FOLLOWING:

1. CONSTRUCTION MATERIALS AND SYSTEMS THAT ARE ALTERNATIVES TO TRADITIONAL MATERIALS AND SYSTEMS PRESCRIBED BY THE *APPLICABLE CODE*.
2. UNUSUAL DESIGN AND CONSTRUCTION APPLICATIONS.
3. ANCHORS POS-INSTALLED IN HARDENED CONCRETE AND MASONRY, WHERE USED FOR ANCHORAGE OF *STORM SHELTER* COMPONENTS FORMING A PART OF THE *STORM SHELTER* ENCLOSURE OR FOR ANCHORAGE OF THE *STORM SHELTER* STRUCTURE TO FOUNDATIONS SHALL BE IN ACCORDANCE WITH SECTION 110.1.2.1.

110.1.2.1 SPECIAL INSPECTIONS TO VERIFY ANCHOR INSTALLATION

A *SPECIAL INSPECTION* SHALL BE PROVIDED TO VERIFY THE POS-INSTALLED ANCHOR INSTALLATION AND CAPACITY IN ACCORDANCE WITH SECTION 106.2.1. FOR POST-INSTALLED ANCHORAGE TO FOUNDATIONS, *SPECIAL INSPECTION* SHALL BE PROVIDED TO VERIFY FOUNDATION ADEQUACY IN ACCORDANCE WITH SECTIONS 106.2.1 AND 307.

TABLE 1705.3
REQUIRED SPECIAL INSPECTIONS AND TESTS OF CONCRETE CONSTRUCTION

TYPE	CONTINUOUS SPECIAL INSPECTION	PERIODIC SPECIAL INSPECTION	REFERENCED STANDARD[a]	IBC REFERENCE
1. INSPECT REINFORCEMENT, INCLUDING RESTRESSING TENDONS, AND VERIFY PLACEMENT.	-	X	ACI 318: CH. 20, 25.2, 25.3, 26.6.1-26.6.3	-
2. REINFORCING BAR WELDING:				-
a. VERIFY WELDABILITY OF REINFORCING BARS OTHER THAN ASTM A706;			AWS D1.4	
b. INSPECT SINGLE-PASS FILLET WELDS, MAXIMUM 5/16"; AND	-	X	ACI 318: 26.6.4	
c. INSPECT ALL OTHER WELDS.	X	X		
3. INSPECT ANCHORS CAST IN CONCRETE.	-	X	ACI 318: 17.8.2	-
4. INSPECT ANCHORS POST-INSTALLED IN HARDENED CONCRETE MEMBERS.[B]				-
a. ADHESIVE ANCHORS INSTALLED IN HORIZONTALLY OR UPWARDLY INCLINED ORIENTATIONS TO RESIST SUSTAINED TENSION LOADS.	X	X	ACI 318: 17.8.2.4	
b. MECHANICAL ANCHORS AND ADHESIVE ANCHORS NOT DEFINED IN 4.A.			ACI 318: 17.8.2	
5. VERIFY USE OF REQUIRED DESIGN MIX.	-	X	ACI 318: CH. 19, 26.4.3, 26.4.4	-
6. PRIOR TO CONCRETE PLACEMENT, FABRICATE SPECIMENS FOR STRENGTH TESTS, PERFORM SLUMP AND AIR CONTENT TESTS, AND DETERMINE THE TEMPERATURE OF THE CONCRETE.	X		ASTM C31 ASTM C172 ACI 318: 26.5, 26.12	-
7. INSPECT CONCRETE AND SHOTCRETE PLACEMENT FOR PROPER APPLICATION TECHNIQUES.	X		ACI 318: 26.5	-
8. VERIFY MAINTENANCE OF SPECIFIED CURING TEMPERATURE AND TECHNIQUES.	-	X	ACI 318: 26.10	-
9. INSPECT PRESTRESSED CONCRETE FOR: A. APPLICATION OF PRESTRESSING FORCES; AND B. GROUTING OF BONDED PRESTRESSING TENDONS.	X X		ACI 318: CH. 20, 25.2, 25.3, 26.6.1-26.6.3	-
10. INSPECT ERECTION OF PRECAST CONCRETE MEMBERS.	-	X	ACI 318: 26.9	-
11. FOR PRECAST CONCRETE DIAPHRAGM CONNECTIONS OR REINFORCEMENT AT JOINTS CLASSIFIED AS MODERATE OR HIGH DEFORMABILITY ELEMENTS (MDE OR HDE) IN STRUCTURES ASSIGNED TO SEISMIC DESIGN CATEGORY C, D, E OR F, INSPECT SUCH CONNECTIONS AND REINFORCEMENT IN THE FIELD FOR:			ACI 318: 26.13.1.3	-
a. INSTALLATION OF THE EMBEDDED PARTS	X			
b. COMPLETION OF THE CONTINUITY OF REINFORCEMENT ACROSS JOINTS.	X		ACI 550.5	
c. COMPLETION OF CONNECTIONS IN THE FIELD.	X			
12. INSPECT INSTALLATION TOLERANCES OF PRECAST CONCRETE DIAPHRAGM CONNECTIONS FOR COMPLIANCE WITH ACI 550.5.	-	X	ACI 318: 26.13.1.3	-
13. VERIFY IN-SITU CONCRETE STRENGTH, PRIOR TO STRESSING OF TENDONS IN POST-TENSIONED CONCRETE AND PRIOR TO REMOVAL OF SHORES AND FORMS FROM BEAMS AND STRUCTURAL SLABS.	-	X	ACI 318: 26.11.2	-
14. INSPECT FORMWORK FOR SHAPE, LOCATION AND DIMENSIONS OF THE CONCRETE MEMBER BEING FORMED.	-	X	ACI 318: 26.11.1.2(b)	-

SCHEDULES OF SPECIAL INSPECTIONS:

TABLE 1705.6
REQUIRED SPECIAL INSPECTIONS AND TESTS OF SOILS

TYPE	CONTINUOUS SPECIAL INSPECTION	PERIODIC SPECIAL IN- SPECTION
1. VERIFY MATERIALS BELOW SHALLOW FOUNDATIONS ARE ADEQUATE TO ACHIEVE THE DESIGN BEARING CAPACITY.	-	X
2. VERIFY EXCAVATIONS ARE EXTENDED TO PROPER DEPTH AND HAVE REACHED PROPER MATERIAL.	-	X
3. PERFORM CLASSIFICATION AND TESTING OF COMPACTED FILL MATERIALS.	-	X
4. VERIFY USE OF PROPER MATERIALS, DENSITIES AND LIFT THICKNESSES DURING PLACEMENT AND COMPACTION OF COMPACTED FILL.	X	-
5. PRIOR TO PLACEMENT OF COMPACTED FILL, INSPECT SUBGRADE AND VERIFY THAT SITE HAS BEEN PREPARED PROPERLY.	-	X

TABLE 1705.2.3
REQUIRED SPECIAL INSPECTIONS OF OPEN-WEB STEEL JOISTS AND JOIST GIRDERS

TYPE	CONTINUOUS SPECIAL INSPECTION	PERIODIC SPECIAL INSPECTION	REFERENCED STANDARD[a]
1. INSTALLATION OF OPEN-WEB STEEL JOISTS AND JOIST GIRDERS.			
a. END CONNECTIONS – WELDING OR BOLTED.	-	X	SJI SPECIFICATIONS LISTED IN SECTION 2207.1.
b. BRIDGING – HORIZONTAL OR DIAGONAL.	-	X	-
1. STANDARD BRIDGING.	X	X	SJI SPECIFICATIONS LISTED IN SECTION 2207.1.
2. BRIDGING THAT DIFFERS FROM THE SJI SPECIFICATIONS LISTED IN SECTION 2207.1.	-	X	-

MINIMUM REQUIREMENTS FOR INSPECTIONS OF STRUCTURAL STEEL CONSTRUCTION

INSPECTION TASKS	QC	QA	REFERENCED STANDARD
INSPECTION TASKS PRIOR TO WELDING			
1. Welder qualification records and continuity records	P	O	AISC 360 TABLE N5.4-1
2. Welding procedure specifications (WPSs) available	P	O	AISC 360 TABLE N5.4-1
3. Manufacturing certifications for welding consumables available	P	O	AISC 360 TABLE N5.4-1
4. Material identification (type/grade)	P	O	AISC 360 TABLE N5.4-1
5. Welder Identification system	P	O	AISC 360 TABLE N5.4-1
8. Configuration and finish of access holes	P	O	AISC 360 TABLE N5.4-1
9. Fit-up of fillet welds • Dimensions (alignment gaps at root) • Cleanliness (condition of steel surfaces) • Tacking (tack weld quality and location)	P	O	AISC 360 TABLE N5.4-1
10. Check welding equipment	P	O	AISC 360 TABLE N5.4-1
INSPECTION TASKS DURING WELDING			
1. Use of qualified welders	P	O	AISC 360 TABLE N5.4-2
2. Control and handling of welding consumables • Packaging • Exposure Control	P	O	AISC 360 TABLE N5.4-2
3. No welding over cracked track welds	P	O	AISC 360 TABLE N5.4-2
4. Environmental conditions • Wind speed within limits • Precipitation and temperature	P	O	AISC 360 TABLE N5.4-2
5. WPS followed • Settings on welding equipment • Travel speed • Selected welding materials • Shielding gas type/flowrate • Preheat applied • Interpass temperature maintained (min/max) • Proper position (F,V,H,OH)	P	O	AISC 360 TABLE N5.4-2
6. Welding techniques • Interpass and final cleaning • Each pass within profile limitations • Each pass meets quality requirements	P	O	AISC 360 TABLE N5.4-2
INSPECTION TASKS AFTER WELDING			
1. Welds cleaned	P	O	AISC 360 TABLE N5.4-3
2. Size, length, and locations of welds	P	O	AISC 360 TABLE N5.4-3
3. Welds meet visual acceptance criteria • Crack prohibition • Weld/base-metal fusion • Crater cross section • Weld profiles • Weld size • Undercut • Porosity	P	O	AISC 360 TABLE N5.4-3
4. Arc strikes	P	O	AISC 360 TABLE N5.4-3
5. k-area	P	O	AISC 360 TABLE N5.4-3
6. Weld access holes in roled heavy shapes and built-up heavy shapes	P	O	AISC 360 TABLE N5.4-3
7. Backing removed and weld tabs removed (if required)	P	O	AISC 360 TABLE N5.4-3
8. Repair activities	P	O	AISC 360 TABLE N5.4-3
9. Document acceptance or rejection of welded joint or member	P	O	AISC 360 TABLE N5.4-3
10. No prohibited welds have been added without the approval of the EOR	P	O	AISC 360 TABLE N5.4-3
INSPECTION TASKS PRIOR TO BOLTING			
1.Manufacturer's certifications available for fastener materials	P	O	AISC 360 TABLE N5.6-1
2.Fasteners marked in accordance with ASTM requirements	P	O	AISC 360 TABLE N5.6-1
3.Correct fasteners selected for the joint detail (grade, type, bolt length if threads are to be excluded from shear plane)	P	O	AISC 360 TABLE N5.6-1
4.Correct bolting procedures selected for joint detail	P	O	AISC 360 TABLE N5.6-1
5.Connecting elements, including the appropriate faying surface condition and hole preparation, if specified, meet applicable requirements.	P	O	AISC 360 TABLE N5.6-1
6.Pre-installation verification testing by installation personnel observed and documented for fastener assemblies and methods used	P	O	AISC 360 TABLE N5.6-1
7.Proper storage provided for bolts, nuts, washers and other fasteners components	P	O	AISC 360 TABLE N5.6-1
INSPECTION TASKS DURING BOLTING			
1. Fastener assemblies, of suitable condition, placed in all holes and washers are positioned as required	P	O	AISC 360 TABLE N5.6-2
2. Joint brought to the snug-tight condition prior to the pre-tensioning operation	P	O	AISC 360 TABLE N5.6-2
3. Fastener component not turned by the wrench prevented from rotating	P	O	AISC 360 TABLE N5.6-2
4. Fasteners are pre-tensioned in accordance with the RCSC Specification, progressing systematically from the most rigid point toward the free edges.	P	O	AISC 360 TABLE N5.6-2
INSPECTION TASKS AFTER BOLTING	P	O	AISC 360 TABLE N5.6-2
1. Document acceptance or rejection of bolted connections	P	O	AISC 360 TABLE N5.6-2

O - Observe these items on a random basis. Operations need not be delayed pending these inspections
P - Perform these tasks for each welded joint or member, each bolted connection, or each steel element

NO.	DATE	REVISION	APP.

P.E. SEAL REQUIRED
PRELIMINARY
SUBJECT TO REVISION
This document is released for informational purposes under the authority of DAVID MOORE P.E. 139405 on 12/11/2025 It is not to be used for regulatory approval, permit, bidding, or construction purposes.

CONCEPT ENGINEERS
TX. FIRM REGISTRATION # F-04417
Structures for the whole community

IDS Engineering Group
13430 NW. Freeway
Suite 700
Houston, Tx. 77040
713.462.3178
TxEng Firm 2726
TxSurv Firm 10110700

CITY OF HOUSTON
HOUSTON PUBLIC WORKS

LIFT STATION RENEWAL AND REPLACEMENT FY 2023

GENERAL NOTES

WBS NUMBER	FOR CITY OF HOUSTON USE ONLY
R-000267-0179-4	
DRAWING SCALE	
AS NOTED	
CITY OF HOUSTON PM	
NAWARAJ PANTA, P.E.	
DWG. NO. MKT-S-04	SHEET NO. 166 OF 321

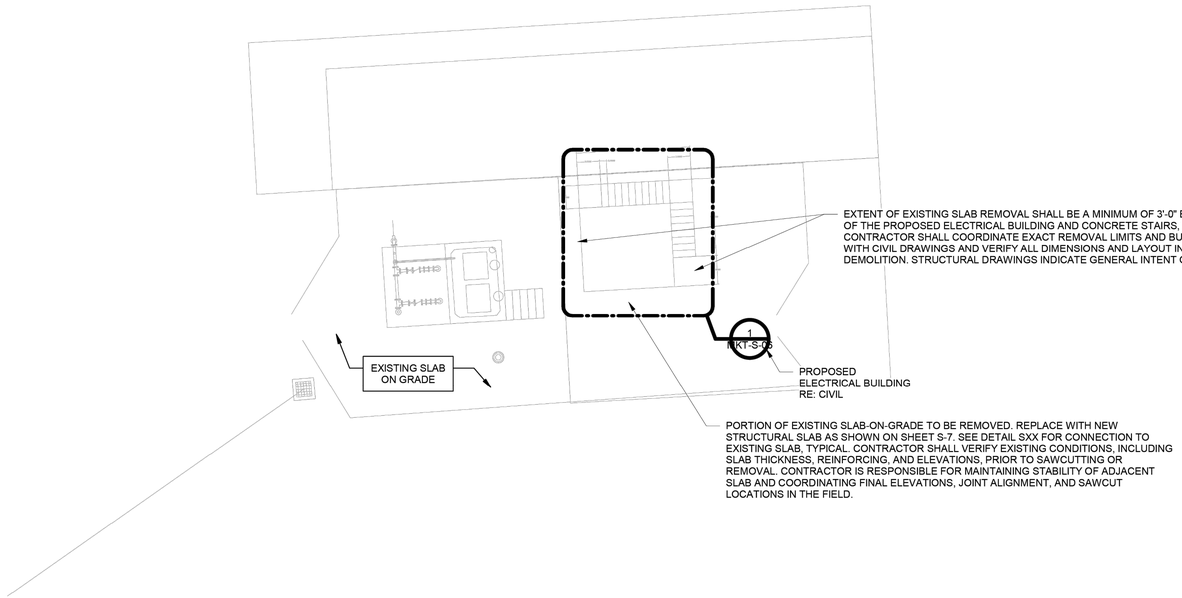

EXTENT OF EXISTING SLAB REMOVAL SHALL BE A MINIMUM OF 3'-0" BEYOND THE EDGE OF THE PROPOSED ELECTRICAL BUILDING AND CONCRETE STAIRS, TYPICAL. CONTRACTOR SHALL COORDINATE EXACT REMOVAL LIMITS AND BUILDING LOCATIONS WITH CIVIL DRAWINGS AND VERIFY ALL DIMENSIONS AND LAYOUT IN THE FIELD PRIOR TO DEMOLITION. STRUCTURAL DRAWINGS INDICATE GENERAL INTENT ONLY.

PORTION OF EXISTING SLAB-ON-GRADE TO BE REMOVED. REPLACE WITH NEW STRUCTURAL SLAB AS SHOWN ON SHEET S-7. SEE DETAIL SXX FOR CONNECTION TO EXISTING SLAB, TYPICAL. CONTRACTOR SHALL VERIFY EXISTING CONDITIONS, INCLUDING SLAB THICKNESS, REINFORCING, AND ELEVATIONS, PRIOR TO SAWCUTTING OR REMOVAL. CONTRACTOR IS RESPONSIBLE FOR MAINTAINING STABILITY OF ADJACENT SLAB AND COORDINATING FINAL ELEVATIONS, JOINT ALIGNMENT, AND SAWCUT LOCATIONS IN THE FIELD.

NO.	DATE	REVISION	APP.

P.E. SEAL REQUIRED

PRELIMINARY

SUBJECT TO REVISION

This document is released for informational purposes under the authority of DAVID MOORE P.E. 139405 on 12/11/2025 It is not to be used for regulatory approval, permit, bidding, or construction purposes.

CONCEPT ENGINEERS
TX. FIRM REGISTRATION # F-04417
Structures for the whole community

IDS Engineering Group
13430 NW. Freeway
Suite 700
Houston, Tx. 77040
713.462.3178
TxEng Firm 2726
TxSurv Firm 10110700

CITY OF HOUSTON

HOUSTON PUBLIC WORKS

LIFT STATION RENEWAL AND REPLACEMENT FY 2023

SITE PLAN

WBS NUMBER	FOR CITY OF HOUSTON USE ONLY
R-000267-0179-4	
DRAWING SCALE	
AS NOTED	
CITY OF HOUSTON PM	
NAWARAJ PANTA, P.E.	
SHEET NO. 167 OF 321	

DWG. NO. MKT-S-05

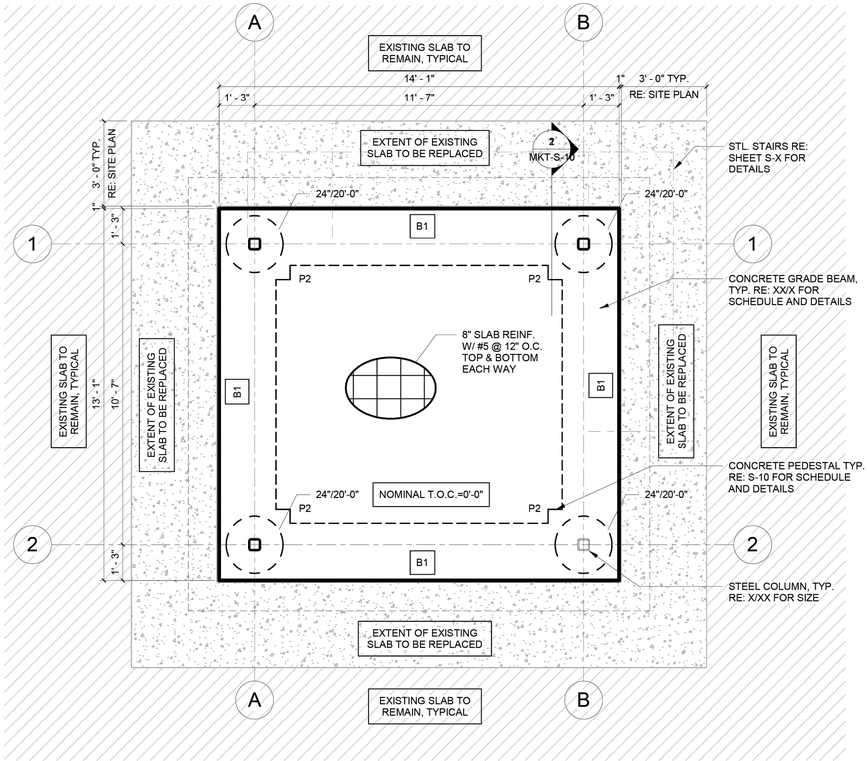

1 ELECTRICAL CABINET PLATFORM FOUNDATION PLAN

3/8" = 1'-0"

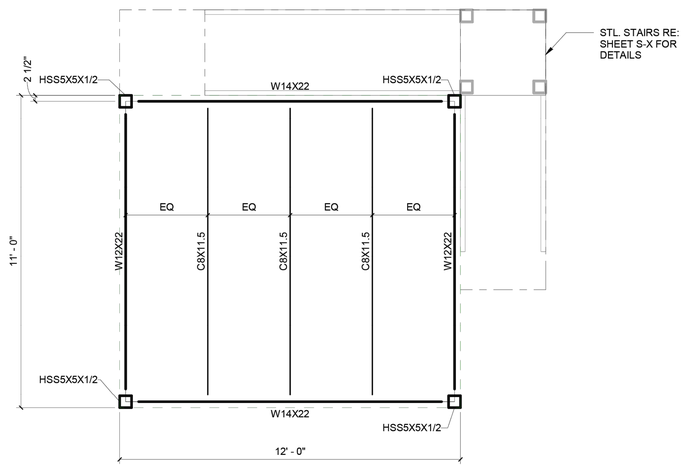

2 ELECTRICAL CABINET PLATFORM FRAMING PLAN

3/8" = 1'-0"

PLAN NOTES:

1. CENTER ALL DRILLED SHAFTS UNDER CENTERLINE OF STEEL COLUMN. IF NO STEEL COLUMN IS SHOWN, CENTER DRILLED SHAFTS UNDER CENTER OF GRADE BEAM.

2. ALL STEEL TO BE HOT DIPPED GALVANIZED.

3. FINISH FLOOR ELEVATION = 0'-0". FINISH FLOOR ELEVATION OF NEW STRUCTURAL SLAB TO MATCH ELEVATION OF EXISTING SLAB. RE: CIVIL FOR ACTUAL ELEVATION.

4. "P1" AS SHOWN ON PLAN INDICATES CONCRETE PEDESTAL TYPE P1. THE TOP ELEVATION OF ALL PEDESTALS IS AT -1'-0" TYP U.N.O. REFER TO S-XX FOR DIMENSIONS & REINF.

5. "B1" AS SHOWN ON PLAN INDICATES CONCRETE BEAM TYPE B1. THE TOP ELEVATION OF ALL BEAMS IS AT -1'-0" TYP U.N.O. REFER TO S-XX FOR BEAM SCHEDULE AND DETAILS.

6. " 18"/20'-0" " AS SHOWN ON PLAN INDICATES A DRILLED STRAIGHT SHAFT THAT IS 18" IN DIAMETER AND 20'-0" LONG MEASURED FROM BOTTOM OF FINISHED FLOOR. THE TOP ELEVATION OF ALL STRAIGHT SHAFTS ARE AT -3'-0", TYP, U.N.O. RE: S-XX FOR STRAIGHT SHAFT SCHEDULE AND DETAILS.

7. REFER TO CIVIL/MEP FOR DIMENSIONS AND LOCATIONS OF ALL SLOPED AND DEPRESSION.

8. (*) INDICATES BEAMS WITH VARYING DEPTHS. RE: SECTION

9. PORTION OF EXISTING SLAB-ON-GRADE TO BE REMOVED. REPLACE WITH NEW STRUCTURAL SLAB AS SHOWN ON SHEET S-7. SEE DETAIL SXX FOR CONNECTION TO EXISTING SLAB, TYPICAL. CONTRACTOR SHALL VERIFY EXISTING CONDITIONS, INCLUDING SLAB THICKNESS, REINFORCING, AND ELEVATIONS, PRIOR TO SAWCUTTING OR REMOVAL. CONTRACTOR IS RESPONSIBLE FOR MAINTAINING STABILITY OF ADJACENT SLAB AND COORDINATING FINAL ELEVATIONS, JOINT ALIGNMENT, AND SAWCUT LOCATIONS IN THE FIELD.

10. EXTENT OF EXISTING SLAB REMOVAL SHALL BE A MINIMUM OF 3'-0" BEYOND THE EDGE OF THE PROPOSED ELECTRICAL BUILDING AND CONCRETE STAIRS, TYPICAL. CONTRACTOR SHALL COORDINATE EXACT REMOVAL LIMITS AND BUILDING LOCATIONS WITH CIVIL DRAWINGS AND VERIFY ALL DIMENSIONS AND LAYOUT IN THE FIELD PRIOR TO DEMOLITION. STRUCTURAL DRAWINGS INDICATE GENERAL INTENT ONLY.

NO.	DATE	REVISION	APP.

P.E. SEAL REQUIRED

PRELIMINARY

SUBJECT TO REVISION

This document is released for informational purposes under the authority of DAVID MOORE P.E. 139405 on 12/11/2025 It is not to be used for regulatory approval, permit, bidding, or construction purposes.

CONCEPT ENGINEERS
TX. FIRM REGISTRATION # F-04417
Structures for the whole community

IDS Engineering Group
13430 NW. Freeway
Suite 700
Houston, Tx. 77040
713.462.3178
TxEng Firm 2726
TxSurv Firm 10110700

CITY OF HOUSTON

HOUSTON PUBLIC WORKS

LIFT STATION RENEWAL AND REPLACEMENT FY 2023

ELECTRICAL BUILDING FOUNDATION & FRAMING PLANS

WBS NUMBER	FOR CITY OF HOUSTON USE ONLY
R-000267-0179-4	
DRAWING SCALE	
AS NOTED	
CITY OF HOUSTON PM	
NAWARAJ PANTA, P.E.	

DWG. NO.	SHEET NO.
MKT-S-06	168 OF 321

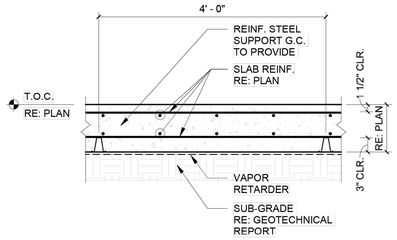

1 TYPICAL SLAB SECTION DETAIL

3/4" = 1'-0"

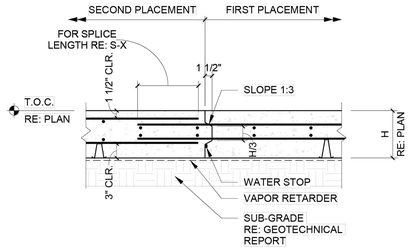

NOTE:
MAXIMUM 80 FEET BETWEEN CONSTRUCTION JOINTS AND 72 HOURS MINIMUM BETWEEN ADJACENT PLACEMENTS.

2 TYPICAL CONSTRUCTION JOINT

3/4" = 1'-0"

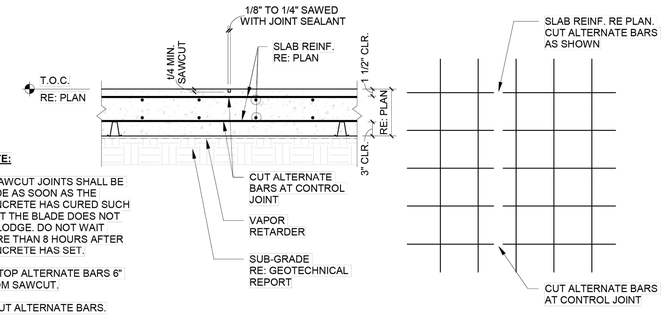

NOTE:

1. SAWCUT JOINTS SHALL BE MADE AS SOON AS THE CONCRETE HAS CURED SUCH THAT THE BLADE DOES NOT DISLODGE. DO NOT WAIT MORE THAN 8 HOURS AFTER CONCRETE HAS SET.
2. STOP ALTERNATE BARS 6" FROM SAWCUT.
3. CUT ALTERNATE BARS.

3 TYPICAL SLAB CONTROL JOINT

3/4" = 1'-0"

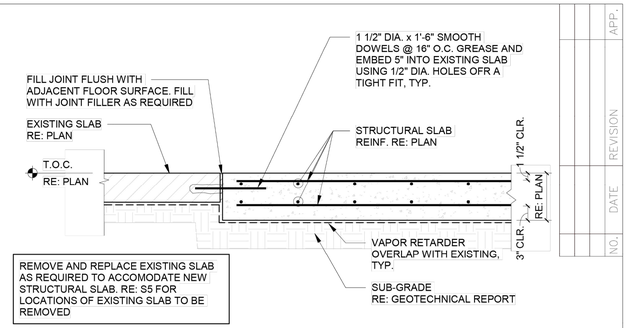

4 TYP NEW TO EXISTING SLAB CONSTRUCTION JOINT

NO SCALE

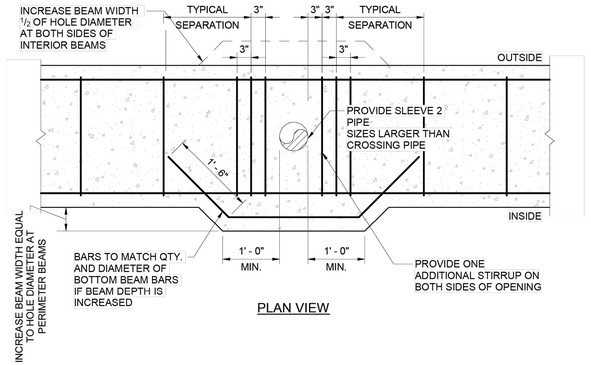

5 VERT. PIPE OPENING LARGER THAN 3" THRU GD. BM.

3/4" = 1'-0"

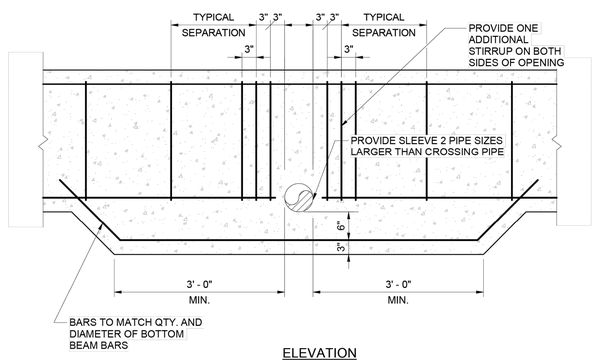

6 PIPE OPENING THRU GD. BM. IN CONFLICT W/BOT. REINF.

3/4" = 1'-0"

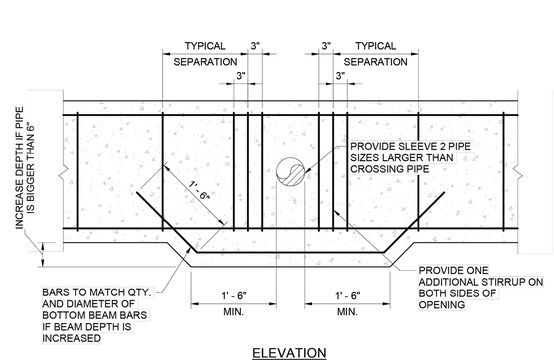

7 TYP. DETAIL PIPE OPENING THRU GRADE BEAM

3/4" = 1'-0"

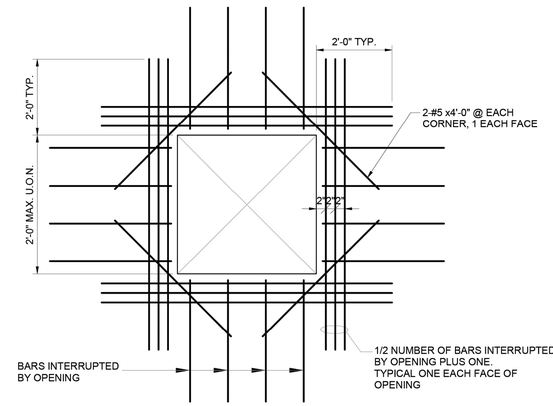

8 TYPICAL ADDITIONAL BAR PLACING DETAIL FOR SLAB

3/4" = 1'-0"

NOTE:

1. GENERAL CONTRACTOR TO COORDINATE REQUIRED SIZE OF BLOCK OUT FOR COLUMNS WITH ARCHITECT AND/OR OWNER.
2. APPLY BLOCK OUT THROUGH FULL DEPTH OF SLAB CONSTRUCTION.
3. BLOCK OUT SHALL BE 3" CLEAR OF EDGE OF BASE PLATE AND STRUCTURAL PLINTH BELOW.
4. COORDINATE CONTROL JOINTS WITH ARCHITECTURAL DRAWINGS.

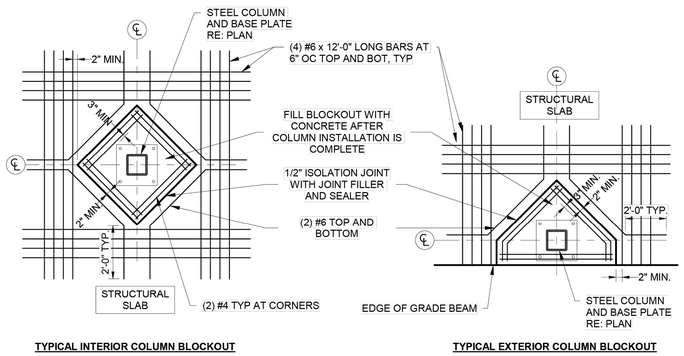

9 TYPICAL BLOCKOUT DETAIL

1/2" = 1'-0"

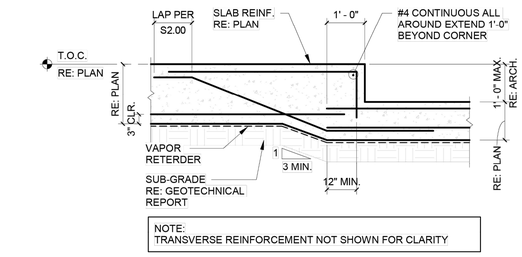

11 TYP. SLAB DEPRESSION DETAIL

1/2" = 1'-0"

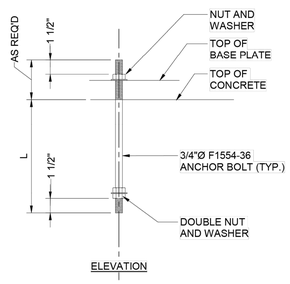

10 TYPICAL ANCHOR BOLT DETAIL

1 1/2" = 1'-0"

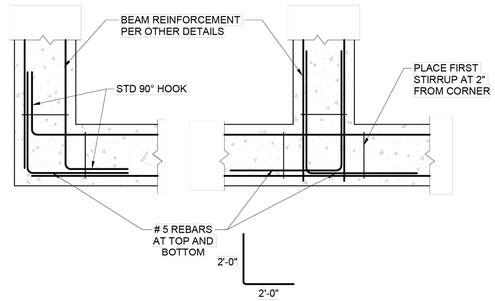

12 TYP. BAR PLACING DETAILS

3/4" = 1'-0"

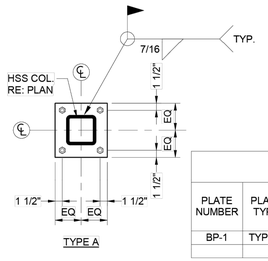

7-BASE PLATE AND ANCHOR BOLT SCHEDULE							
PLATE NUMBER	PLATE TYPE	PLATE THICKNESS	PLATE Fy	ANCHOR BOLT TYPE	ANCHOR BOLT DIAMETER	PLATE DIM.	ANCHOR BOLT LENGTH (L)
BP-1	TYPE A	3/4"	36 ksi	TYPE 1	3/4"	12"X12"	18"

13 BASE PLATE DETAILS AND SCHEDULE

3/4" = 1'-0"

NO.	DATE	REVISION	APP.

P.E. SEAL REQUIRED

PRELIMINARY

SUBJECT TO REVISION

This document is released for informational purposes under the authority of DAVID MOORE P.E. 139405 on 12/11/2025 It is not to be used for regulatory approval, permit, bidding, or construction purposes.

CONCEPT ENGINEERS
TX. FIRM REGISTRATION # F-04417
Structures for the whole community

IDS Engineering Group
13430 NW. Freeway
Suite 700
Houston, Tx. 77040
713.462.3178
TxEng Firm 2726
TxSurv Firm 10110700

CITY OF HOUSTON

HOUSTON PUBLIC WORKS

LIFT STATION RENEWAL AND REPLACEMENT FY 2023

TYPICAL FOUNDATION DETAILS

WBS NUMBER	R-000267-0179-4
DRAWING SCALE	AS NOTED
CITY OF HOUSTON PM	NAWARAJ PANTA, P.E.
DWG. NO.	MKT-S-07
SHEET NO.	169 OF 321

FOR CITY OF HOUSTON USE ONLY

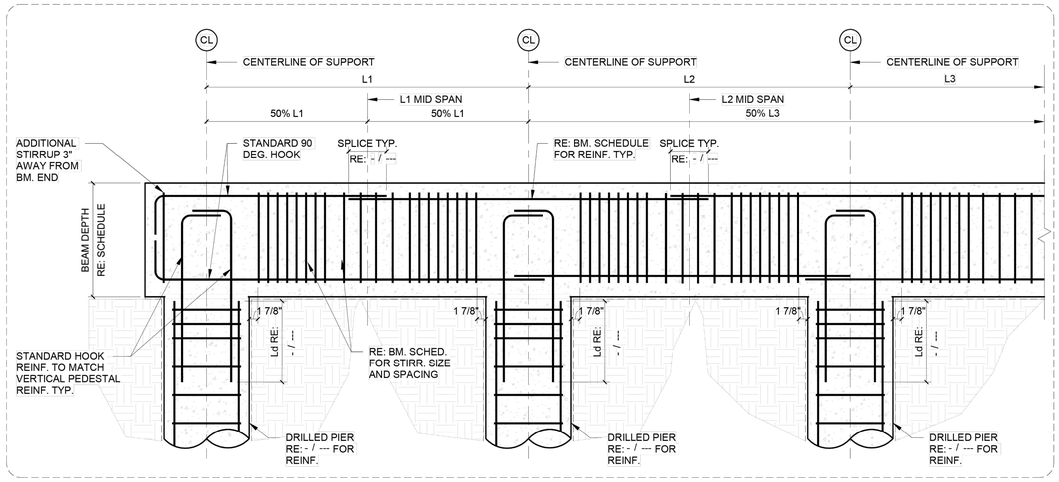

SECTION AT CONTINUOUS BEAM

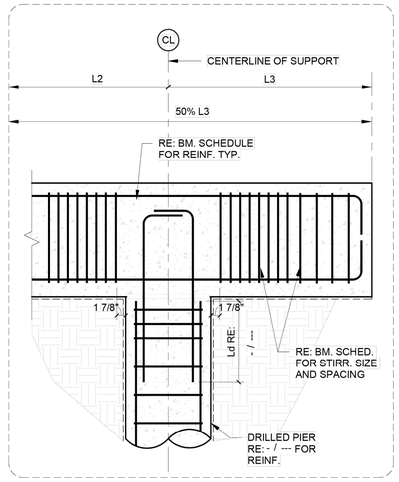

SECTION AT CANTILEVERED BEAM

1 TYPICAL REINFORCEMENT SPLICE DETAIL AT BEAM (NEW DETAIL)

3/4" = 1'-0"

BEAM SCHEDULE						
TAG	WIDTH	DEPTH	TOP REINFORCEMENT	MIDDLE REINFORCEMENT	BOTTOM REINFORCEMENT	STIRRUPS
B1	2'-0"	2'-0"	(5) #7	-	(5) #7	#4 @ 10" O.C. (3 @ 3" O.C., REST @ 10" O.C.) PROVIDE #4 @ 6" O.C. IN CANTILEVERED END. HOOK LONGITUDINAL BARS IN CANTILEVERED END.
B2	2'-0"	2'-0"	(3) #7	-	(3) #7	#4 @ 10" O.C. (3 @ 3" O.C., REST @ 10" O.C.)
B3	2'-0"	RE: PLAN	(5) #7	(6) #6	(5) #7	#4 @ 10" O.C. (3 @ 3" O.C., REST @ 10" O.C.)

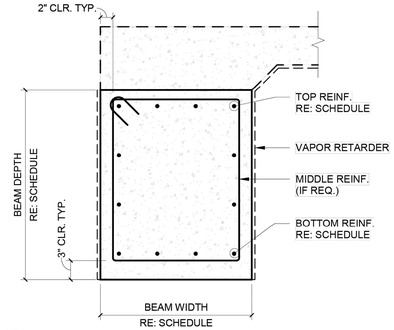

2 BEAM SCHEDULE1

1" = 1'-0"

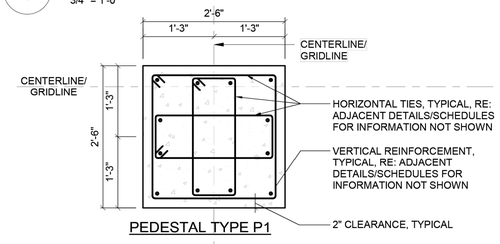

PEDESTAL TYPE P1

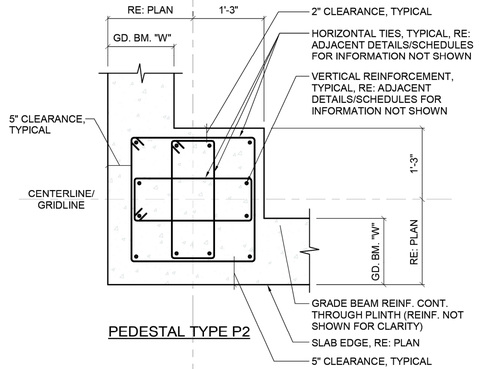

PEDESTAL TYPE P2

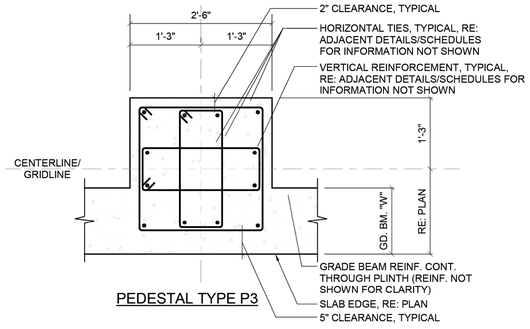

PEDESTAL TYPE P3

3 TYP. PEDESTAL DETAILS/SCHEDULES1

3/4" = 1'-0"

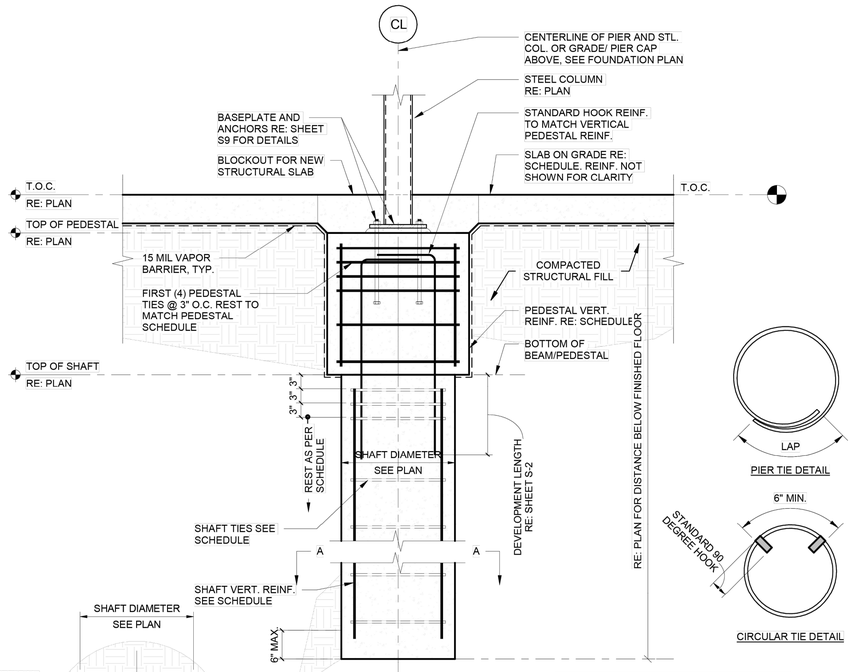

DRILLED SHAFT SCHEDULE		
SHAFT DIAMETER	VERTICAL REINF.	CLOSED TIES
18"	(6) #6	#4 @ 10" O.C.
24"	(8) #7	#4 @ 10" O.C.
30"	(9) #8	#4 @ 10" O.C.
36"	(10) #9	#4 @ 10" O.C.

4 TYPICAL STRAIGHT SHAFT DETAILS

3/4" = 1'-0"

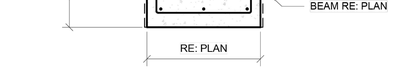

5 SECTION AT INTERIOR BEAM1

3/4" = 1'-0"

PEDESTAL SCHEDULE			
TAG	VERT. REINF.	CLOSED TIES	NOTES
TYPE P1	(12) #6	#4 @ 10" O.C.	TOP 4- #4 CLOSED TIES @ 3" O.C., REST @ 10" O.C.
TYPE P2	(12) #6	#4 @ 10" O.C.	TOP 4- #4 CLOSED TIES @ 3" O.C., REST @ 10" O.C.
TYPE P3	(12) #6	#4 @ 10" O.C.	TOP 4- #4 CLOSED TIES @ 3" O.C., REST @ 10" O.C.

6 PEDESTAL SCHEDULE1

1" = 1'-0"

P.E. SEAL REQUIRED

PRELIMINARY

SUBJECT TO REVISION

This document is released for informational purposes under the authority of DAVID MOORE P.E. 139405 on 12/11/2025 It is not to be used for regulatory approval, permit, bidding, or construction purposes.

CONCEPT ENGINEERS
TX. FIRM REGISTRATION # F-04417
Structures for the whole community

IDS Engineering Group
13430 NW. Freeway
Suite 700
Houston, Tx. 77040
713.462.3178
TxEng Firm 2726
TxSurv Firm 10110700

CITY OF HOUSTON

HOUSTON PUBLIC WORKS

LIFT STATION RENEWAL AND REPLACEMENT FY 2023

FOUNDATION DETAILS & SCHEDULES

WBS NUMBER	FOR CITY OF HOUSTON USE ONLY
R-000267-0179-4	
DRAWING SCALE	
AS NOTED	
CITY OF HOUSTON PM	
NAWARAJ PANTA, P.E.	
DWG. NO. MKT-S-08	SHEET NO. 170 OF 321

NO.	DATE	REVISION	APP.

SINGLE SHEAR PLATE CONNECTION SCHEDULE					
BEAM	BOLTS	DIAMETER	GRADE	PLATE	WELD
W6x	2	5/8"	A325	1/4"	3/16" FILLET
W8x	2	3/4"	A325	1/4"	3/16" FILLET
W10x	3	3/4"	A325	1/4"	3/16" FILLET
W12x	3	7/8"	A325	5/16"	1/4" FILLET
W14x	3	7/8"	A325	5/16"	1/4" FILLET
W16x	4	7/8"	A325	5/16"	1/4" FILLET
W18x	5	7/8"	A325	5/16"	1/4" FILLET
W21x	6	7/8"	A325	3/8"	5/16" FILLET
W24x	6	7/8"	A325	3/8"	5/16" FILLET

1 CONNECTION SCHEDULE
3/4" = 1'-0"

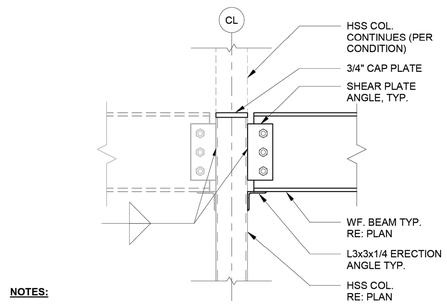

NOTES:
1. PROVIDE NUMBER OF REQUIRED BOLTS TO SUPPORT REACTION.
2. RE: PLAN DOUBLE / SINGLE CONDITIONS.

2 TYP. BM. TO COL. SHEAR CONNECTION
1" = 1'-0"

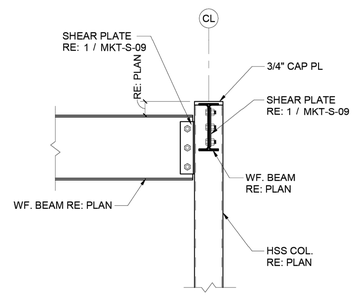

3 BM./COL. CONNECTION DET.
3/4" = 1'-0"

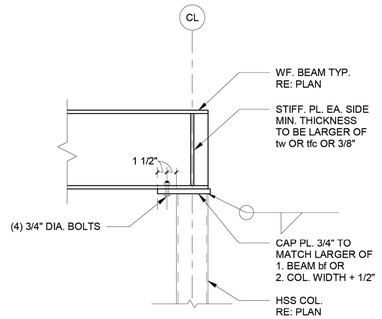

4 TYP. BEAM OVER COLUMN CONNECTION
1" = 1'-0"

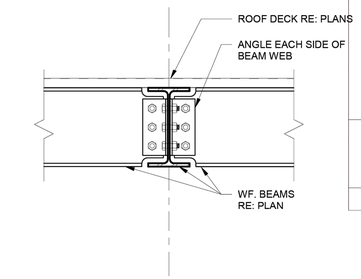

NOTES:
1. SEE SCHEDULE FOR MORE INFORMATION.

5 TYP. BEAM TO BEAM CONNECTION
1" = 1'-0"

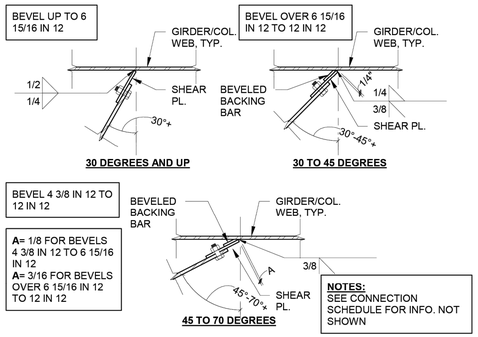

6 SKEWED BEAM CONNECTIONS
1" = 1'-0"

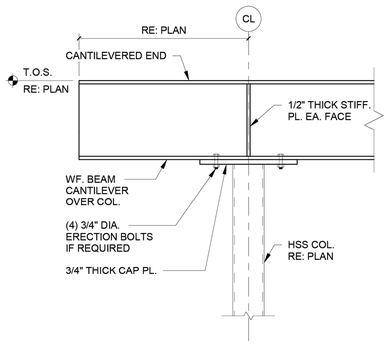

7 TYP. CANTILEVERED STL. BM.
1" = 1'-0"

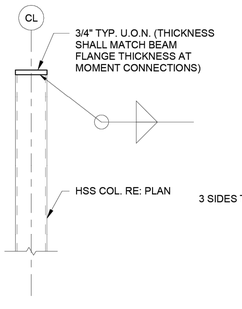

8 TYP. HSS COLUMN CAP PLATE
1" = 1'-0"

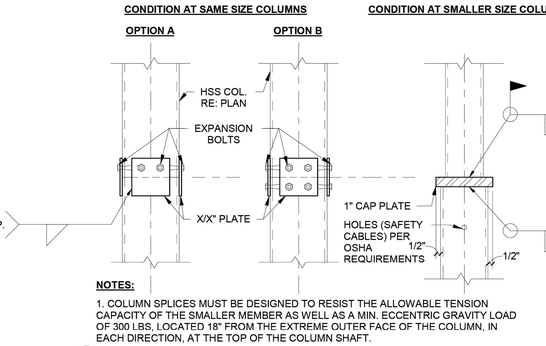

NOTES:
1. COLUMN SPLICES MUST BE DESIGNED TO RESIST THE ALLOWABLE TENSION CAPACITY OF THE SMALLER MEMBER AS WELL AS A MIN. ECCENTRIC GRAVITY LOAD OF 300 LBS, LOCATED 18" FROM THE EXTREME OUTER FACE OF THE COLUMN, IN EACH DIRECTION, AT THE TOP OF THE COLUMN SHAFT.

9 TYP. HSS COLUMN SPLICE DETAILS
1 1/2" = 1'-0"

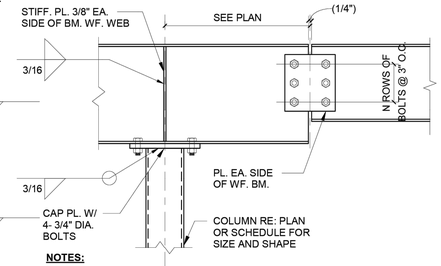

NOTES:
1. BOLTS ARE ASTM A325N.
2. BEAM SIZE IS THE SUPPORTED BEAM.
3. SHORT-SLOTTED HOLES SHALL NOT BE USED FOR PRIMARY FRAME CONNECTIONS. SEE SPECIFICATIONS FOR ADDITIONAL INFORMATION.
4. RE: CONNECTION SHEDULE

10 TYP. BEAM. SPLICE CONNX.
1" = 1'-0"

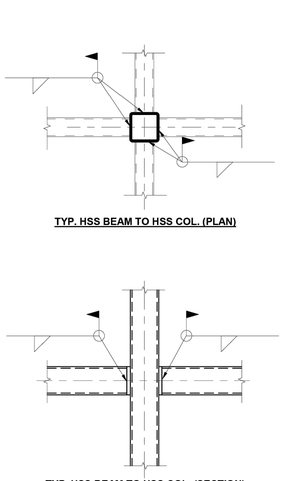

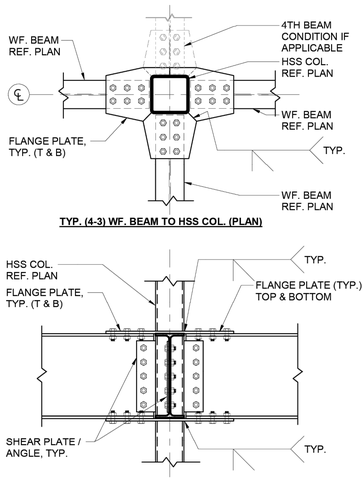

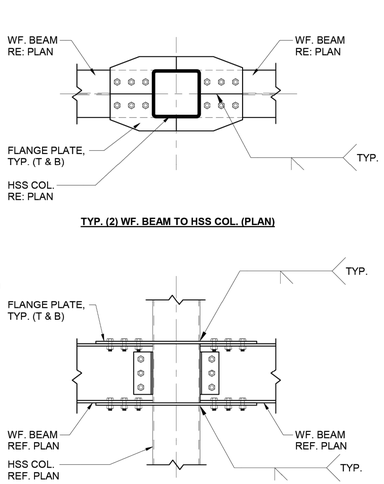

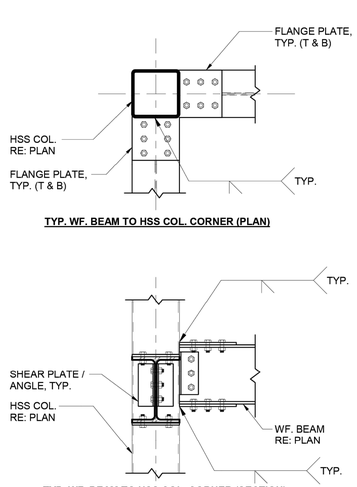

NOTES:
1. BOLTS IN WEB CONNECTION SHALLBE SNUG TIGHTENED PRIOR TO WELDING OF FLANGES.
2. SLIP-CRITICAL BOLTED CONNECTION IN WEB USING A325 BOLTS IN HORIZONTAL SHORT-SLOTTED HOLES U.N.O. RESISTANCE BY BOLTS TO SHEAR SHALL BE BY FRICTION, PROPORTIONED USING THE STANDARD HOLE VALUE ON A CLASS "A" SURFACE.
3. REFER TO SPECIFICATIONS FOR CONNECTION DESIGN CRITERIA.
4. PROVIDE PREDESIGNED SHEAR CONNECTIONS AS SHOWN IN AISC LRFD MANUAL WHERE APPLICABLE.
5. IF MOMENT IS SHOWN ON DRAWINGS, PARTIAL PENETRATION WELD TO DEVELOP MOMENT CAN BE USED IN LIEU OF CJP WELD. FOR THIS CASE, WELD SHALL BE REQUIRED TO DEVELOP THE BEAM FLANGE FORCE COMPUTED AS FOLLOWS: Pu= (Mu)/(0.95D).
WHERE: Mu= DESIGN MOMENT (KIP-IN).
D= BEAM DEPTH (INCHES).
Pu= BEAM FLANGE FORCE (KIPS).

11 TYP. MOMENT CONNECTIONS
3/4" = 1'-0"

NO.	DATE	REVISION	APP.

P.E. SEAL REQUIRED
PRELIMINARY
SUBJECT TO REVISION
This document is released for informational purposes under the authority of DAVID MOORE P.E. 139405 on 12/11/2025 It is not to be used for regulatory approval, permit, bidding, or construction purposes.

CONCEPT ENGINEERS
TX. FIRM REGISTRATION # F-04417
Structures for the whole community

IDS Engineering Group
13430 NW. Freeway
Suite 700
Houston, Tx. 77040
713.462.3178
TxEng Firm 2726
TxSurv Firm 10110700

CITY OF HOUSTON
HOUSTON PUBLIC WORKS

LIFT STATION RENEWAL AND REPLACEMENT FY 2023

TYPICAL STEEL DETAILS

WBS NUMBER	FOR CITY OF HOUSTON USE ONLY
R-000267-0179-4	
DRAWING SCALE	
AS NOTED	
CITY OF HOUSTON PM	
NAWARAJ PANTA, P.E.	

DWG. NO.	SHEET NO.
MKT-S-09	171 OF 321

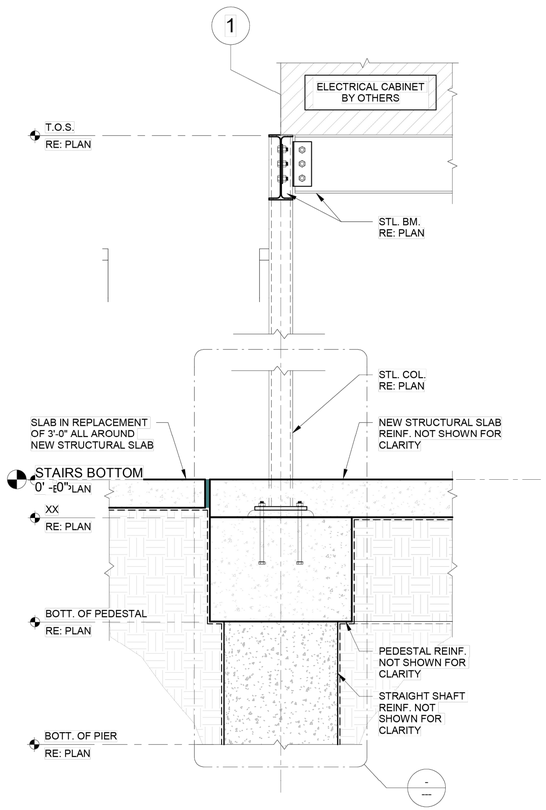

1 SECTION @ CORNER OF STEEL PLATFORM

3/4" = 1'-0"

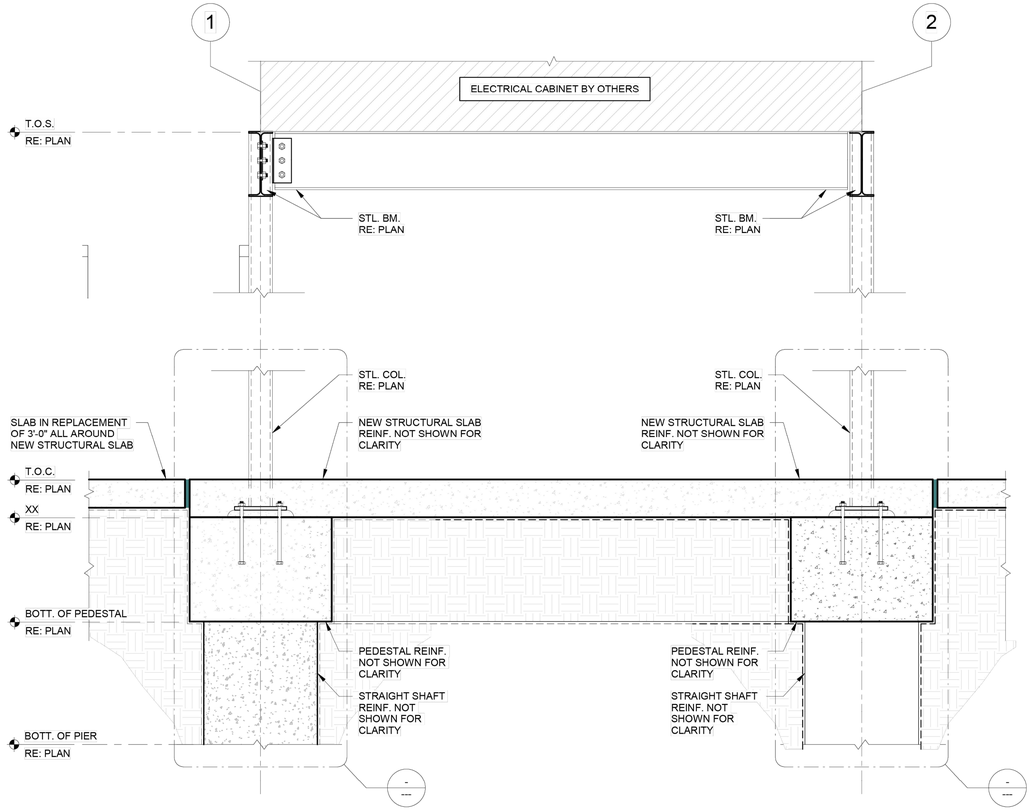

2 FULL SECTION @ STEEL PLATFORM

3/4" = 1'-0"

NO.	DATE	REVISION	APP.

P.E. SEAL REQUIRED

PRELIMINARY

SUBJECT TO REVISION

This document is released for informational purposes under the authority of DAVID MOORE P.E. 139405 on 12/11/2025 It is not to be used for regulatory approval, permit, bidding, or construction purposes.

CONCEPT ENGINEERS
TX. FIRM REGISTRATION # F-04417
Structures for the whole community

IDS Engineering Group
13430 NW. Freeway
Suite 700
Houston, Tx. 77040
713.462.3178
TxEng Firm 2726
TxSurv Firm 10110700

CITY OF HOUSTON

HOUSTON PUBLIC WORKS

LIFT STATION RENEWAL AND REPLACEMENT FY 2023

FRAMING DETAILS

WBS NUMBER	FOR CITY OF HOUSTON USE ONLY
R-000267-0179-4	
DRAWING SCALE	
AS NOTED	
CITY OF HOUSTON PM	
NAWARAJ PANTA, P.E.	

DWG. NO.	SHEET NO.
MKT-S-10	172 OF 321

PLOTTED: 12/11/2025 8:26 PM

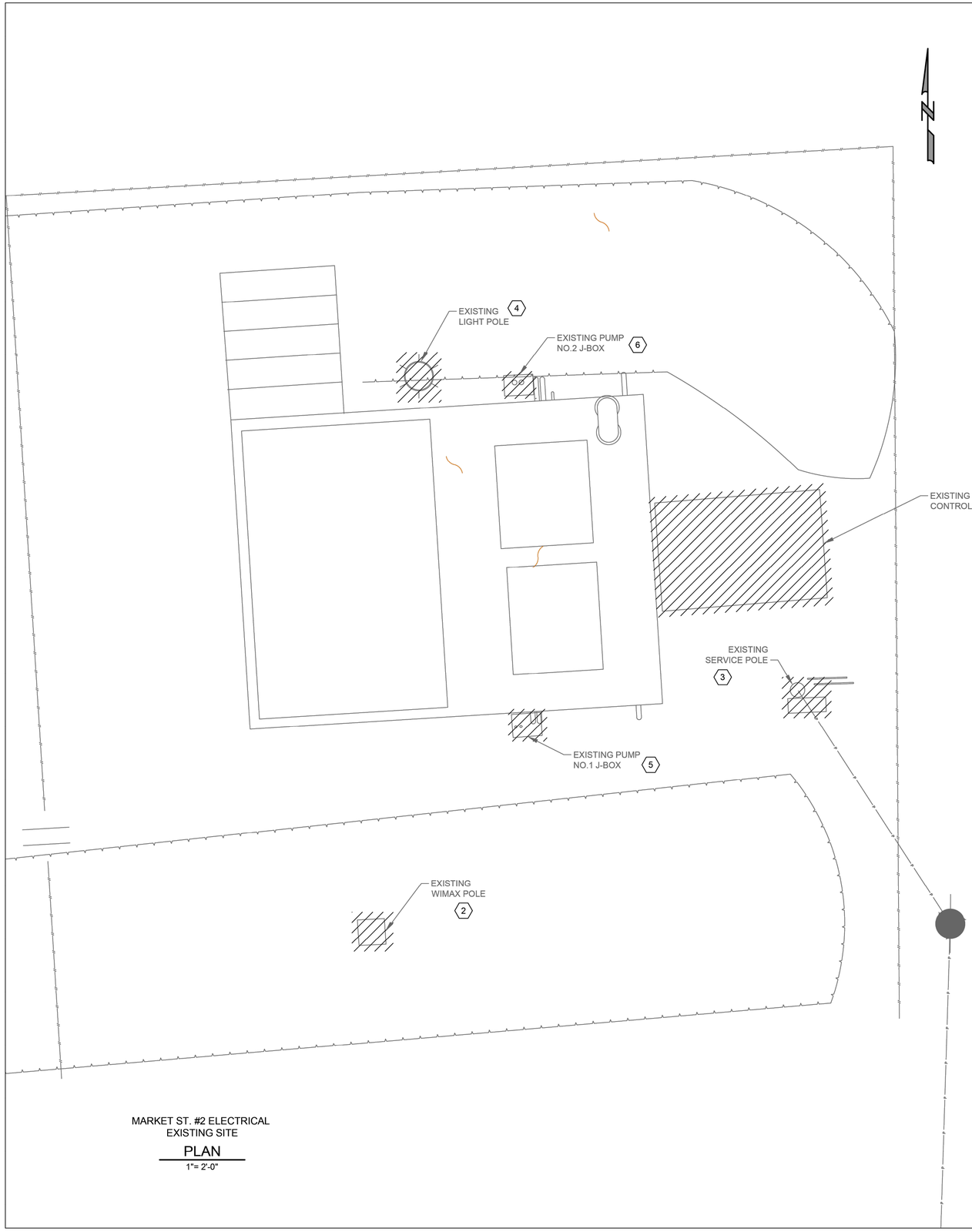

MARKET ST. #2 ELECTRICAL
EXISTING SITE
PLAN
1"= 2'-0"



EXISTING
CONTROL PANEL

PHOTOGRAPH A 1
NTS -

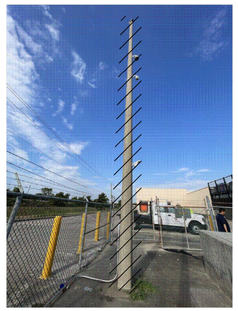

EXISTING
WIMAX POLE

PHOTOGRAPH B 2
NTS -

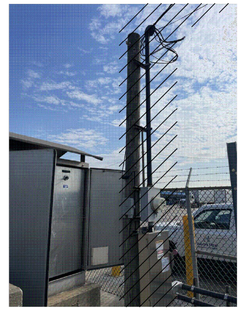

EXISTING
SERVICE POLE

PHOTOGRAPH C 3
NTS -



EXISTING
LIGHT POLE

PHOTOGRAPH D 4
NTS -



EXISTING PUMP NO.1
J-BOX

PHOTOGRAPH E 5
NTS -



EXISTING PUMP NO.2
J-BOX

PHOTOGRAPH F 6
NTS -

NOTES BY SYMBOL "⟨#⟩":

1. EXISTING CONTROL PANEL TO BE DEMOLISHED AND REMOVED.
2. EXISTING WIMAX POLE TO BE DEMOLISHED AND REMOVED.\
3. EXISTING SERVICE POLE TO BE DEMOLISHED AND REMOVED.
4. EXISTING LIGHT POLE TO BE DEMOLISHED AND REMOVED.
5. EXISTING PUMP NO.1 J-BOX TO BE DEMOLISHED AND REMOVED.
6. EXISTING PUMP NO.2 J-BOX TO BE DEMOLISHED AND REMOVED.

NO.	DATE	REVISION	APP.

FOR INTERIM REVIEW
ONLY NOT INTENDED FOR
PERMIT, BIDDING OR
CONSTRUCTION PURPOSES.
ENGINEER:
HOSS FOROUZAN
P.E. SERIAL NO.77748
12/15/2025

GAI
Gupta & Associates, Inc.
CONSULTING ENGINEERING
Registration No. F-2593
302 Dennis St.,
Houston, Texas 77006
Tel: 713-636-2936
Fax: 713-636-2987
email: hforouzan@gaiconsulting.com

IDS Engineering Group
13430 NW. Freeway
Suite 700
Houston, Tx. 77040
713.462.3178
TxEng Firm 2726
TxSurv Firm 10110700

CITY OF HOUSTON
HOUSTON PUBLIC WORKS

LIFT STATION RENEWAL
AND REPLACEMENT FY 2023

MARKET ST. NO.2 LIFT STATION EXISTING SITE PLAN

WBS NUMBER	FOR CITY OF HOUSTON USE ONLY
R-000267-0179-4	
DRAWING SCALE	
HORIZ: VERT:	
CITY OF HOUSTON PM	
NAWARAJ PANTA, P.E.	

DWG. NO.	SHEET NO. 173 OF 321
MKT–E–1	

IDS JOB No. 0057-085-00

FILE PATH: O:\H8108_Lift Station Rehabilitation And Reconstruction (IDS)\6 Drawings\Electrical\Working\Market St. #2\H8108_MKT-E-01.dwg

PLOTTED: 12/11/2025 8:26 PM

NOTES:

1. THE ELECTRICAL INSTALLATION IN THE WET WELL SHALL BE EXPLOSION PROOF, IN ACCORDANCE WITH THE NATIONAL ELECTRICAL CODE FOR CLASS I, DIVISION 1 LOCATIONS.
2. YARD LIGHT CONTROLLED BY LIGHTING SWITCH.
3. TYPE "B" FIXTURE TO BE INSTALLED ON THE POLE PROVIDING WIRES FOR THE "B" LIGHT.
4. INSIDE WETWELL RATED NEMA CLASS , DIV. 1, OUTSIDE ABOVE GROUND, AROUND WETWELL RATED CLASS 1, DIV. 2 ACCORDING TO NFPA 820.
5. GROUNDING LOOP SHALL BE BURIED 30" BELOW FINISHED GRADE.
6. #4/0 BARE COPPER GROUND TO BE BONDED TO PLATFORM STRUCTURAL STEEL.
7. #4/0 BARE COPPER GROUND TO BE BONDED TO HANDRAIL.
8. #2/0 BARE COPPER GROUND TO BE BONDED TO FENCE POST.

NO.	DATE	REVISION	APP.

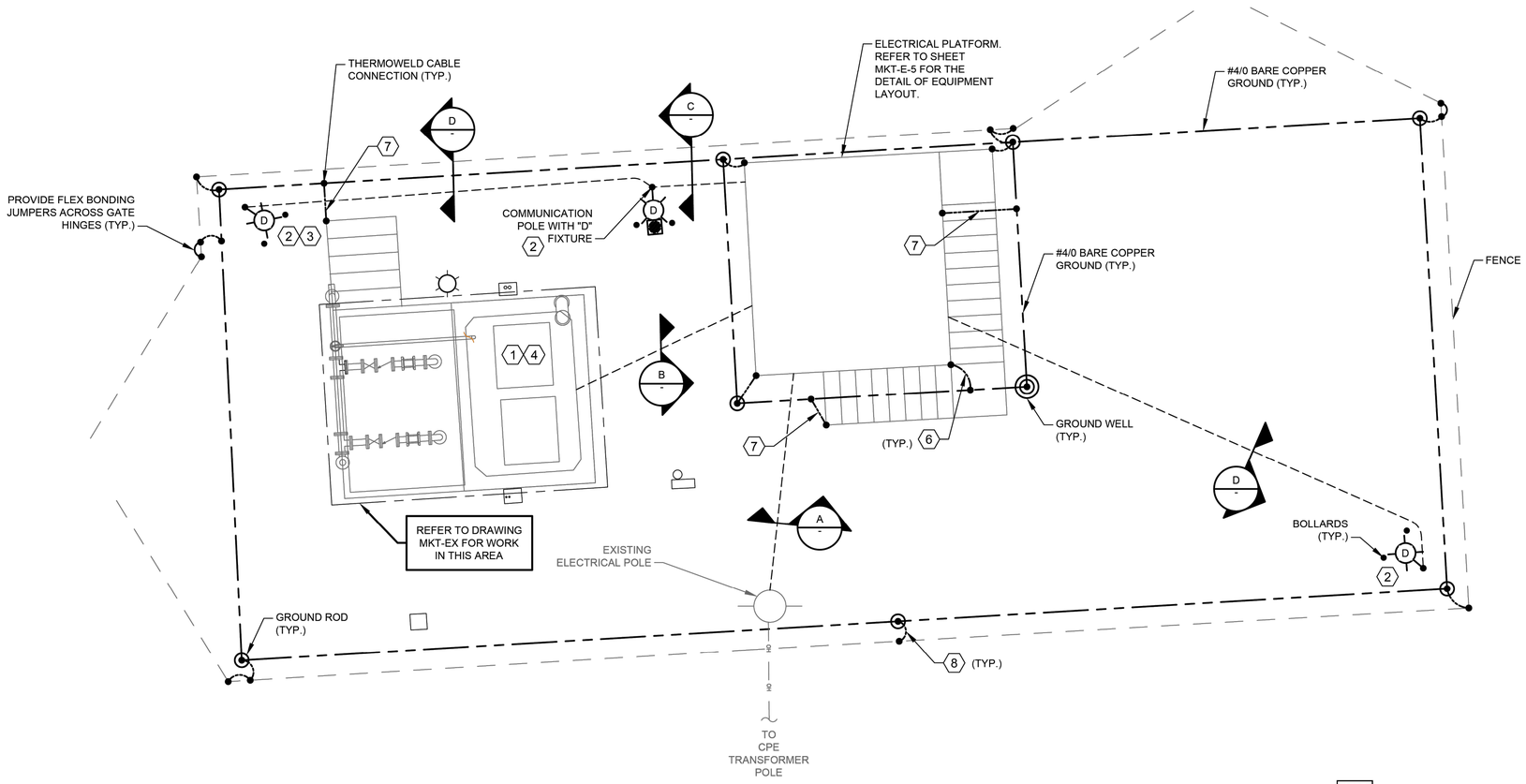

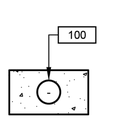

DUCTBANK

SECTION A
NTS

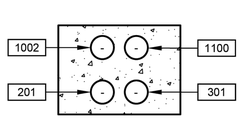

DUCTBANK

SECTION B
NTS

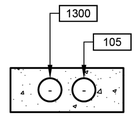

DUCTBANK

SECTION C
NTS

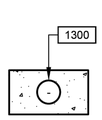

DUCTBANK

SECTION D
NTS

MARKET ST. #2 ELECTRICAL PROPOSED SITE

PLAN

1"= 4'-0"

FOR INTERIM REVIEW ONLY NOT INTENDED FOR PERMIT, BIDDING OR CONSTRUCTION PURPOSES.
ENGINEER:
HOSS FOROUZAN
P.E. SERIAL NO.77748
12/15/2025

GAI
Gupta & Associates, Inc.
CONSULTING ENGINEERING
Registration No. F-2593
302 Dennis St.,
Houston, Texas 77006
Tel: 713-636-2936
Fax: 713-636-2987
email: hforouzan@gaiconsulting.com

IDS Engineering Group
13430 NW. Freeway
Suite 700
Houston, Tx. 77040
713.462.3178
TxEng Firm 2726
TxSurv Firm 10110700

CITY OF HOUSTON
HOUSTON PUBLIC WORKS

LIFT STATION RENEWAL AND REPLACEMENT FY 2023

MARKET ST. NO.2 LIFT STATION PROPOSED SITE PLAN

WBS NUMBER	FOR CITY OF HOUSTON USE ONLY
R-000267-0179-4	
DRAWING SCALE	
HORIZ: VERT:	
CITY OF HOUSTON PM	
NAWARAJ PANTA, P.E.	

DWG. NO.	SHEET NO. 174 OF 321
MKT-E-2	

FILE PATH: O:\H8108_Lift Station Rehabilitation And Reconstruction (IDS)\6 Drawings\Electrical\Working\Market St. #2\H8108_MKT-E-02.dwg

IDS JOB No. 0057-085-00

PLOTTED: 12/11/2025 8:26 PM

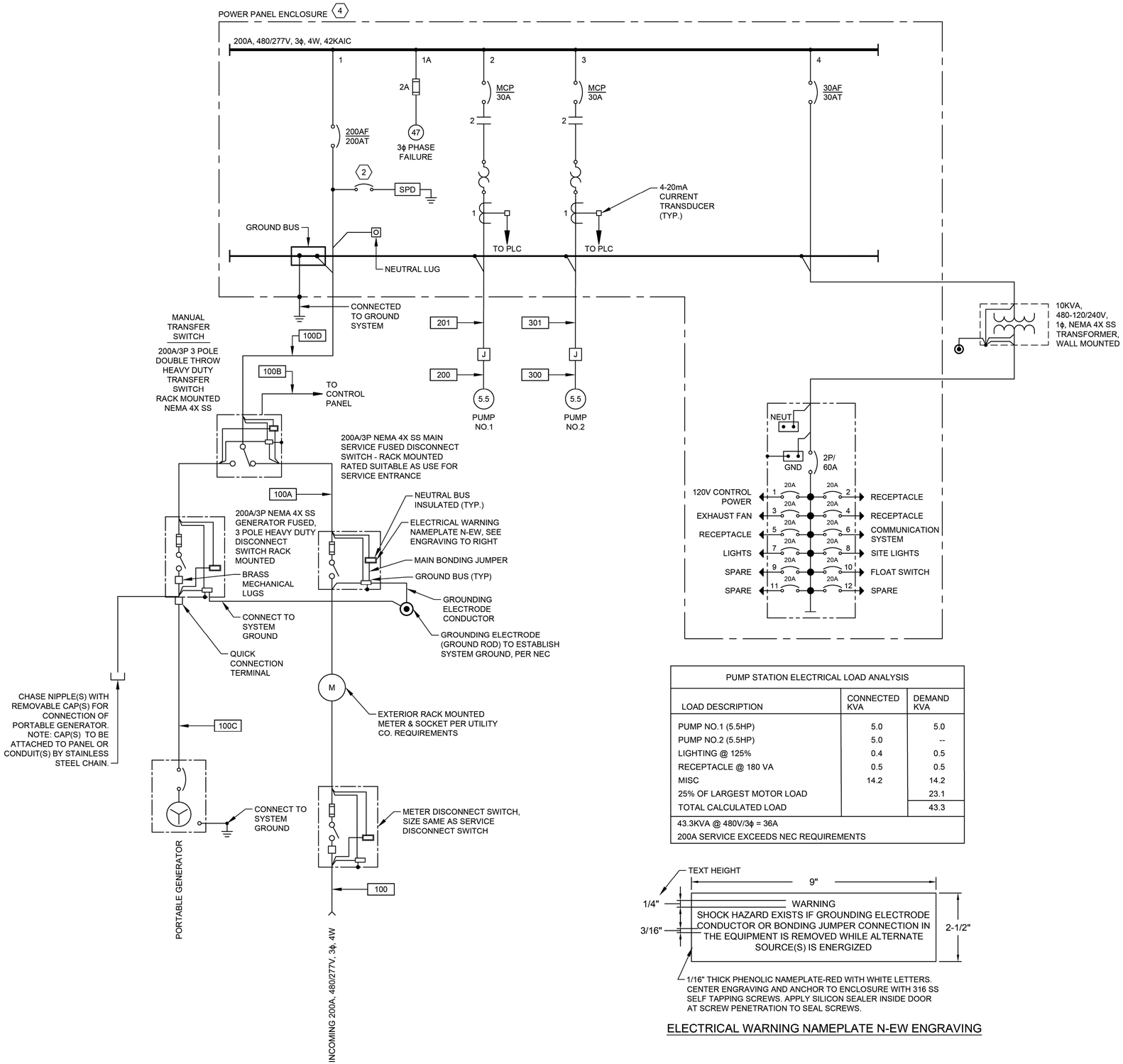

NOTES:

1. PROVIDE A NORMALLY OPEN (NO) AUXILIARY CONTACT ON BOTH ON POSITIONS.
2. PROVIDE BREAKER ACCORDING TO MANUFACTURER'S REQUIREMENTS.
3. POINT TO POINT METHOD IS USED FOR SHORT CIRCUIT CURRENT CALCULATION.
4. CONTRACTOR SHALL PROVIDE A PERMANENTLY AFFIXED LABEL (2" X 3"0 SHOWING THE AVAILABLE FAULT CURRENT AND CALCULATION DATE. THE LABEL SHALL BE BLUE LETTERING ON A CONTRASTING BACKGROUND.
5. THE INSULATION TYPES OF ALL ELECTRICAL CONDUCTORS USED IN THE PROJECT HAVE BEEN SPECIFIED IN ELECTRICAL SPECIFICATIONS (16120, 16121, AND 16122). THE TYPES OF CONDUITS USED IN THE PROJECT HAS BEEN SPECIFIED IN ELECTRICAL SPECIFICATIONS 16111.

PUMP STATION ELECTRICAL LOAD ANALYSIS		
LOAD DESCRIPTION	CONNECTED KVA	DEMAND KVA
PUMP NO.1 (5.5HP)	5.0	5.0
PUMP NO.2 (5.5HP)	5.0	--
LIGHTING @ 125%	0.4	0.5
RECEPTACLE @ 180 VA	0.5	0.5
MISC	14.2	14.2
25% OF LARGEST MOTOR LOAD		23.1
TOTAL CALCULATED LOAD		43.3
43.3KVA @ 480V/3ϕ = 36A		
200A SERVICE EXCEEDS NEC REQUIREMENTS		

1/16" THICK PHENOLIC NAMEPLATE-RED WITH WHITE LETTERS. CENTER ENGRAVING AND ANCHOR TO ENCLOSURE WITH 316 SS SELF TAPPING SCREWS. APPLY SILICON SEALER INSIDE DOOR AT SCREW PENETRATION TO SEAL SCREWS.

ELECTRICAL WARNING NAMEPLATE N-EW ENGRAVING

NO.	DATE	REVISION	APP.

FOR INTERIM REVIEW ONLY NOT INTENDED FOR PERMIT, BIDDING OR CONSTRUCTION PURPOSES.
ENGINEER:
HOSS FOROUZAN
P.E. SERIAL NO.77748
12/15/2025

GAI
Gupta & Associates, Inc.
CONSULTING ENGINEERING
Registration No. F-2593
302 Dennis St.,
Houston, Texas 77006
Tel: 713-636-2936
Fax: 713-636-2987
email: hforouzan@gaiconsulting.com

IDS Engineering Group
13430 NW. Freeway
Suite 700
Houston, Tx. 77040
713.462.3178
TxEng Firm 2726
TxSurv Firm 10110700

CITY OF HOUSTON
HOUSTON PUBLIC WORKS

LIFT STATION RENEWAL AND REPLACEMENT FY 2023

MARKET ST. NO.2 LIFT STATION SINGLE LINE DIAGRAM

WBS NUMBER	FOR CITY OF HOUSTON USE ONLY
R-000267-0179-4	
DRAWING SCALE	
HORIZ: VERT:	
CITY OF HOUSTON PM	
NAWARAJ PANTA, P.E.	
DWG. NO. MKT-E-3	SHEET NO. 175 OF 321

IDS JOB No. 0057-085-00

FILE PATH: O:\H8108_Lift Station Rehabilitation And Reconstruction (IDS)\6 Drawings\Electrical\Working\Market St. #2\H8108_MKT-E-03.dwg

PLOTTED: 12/11/2025 8:26 PM

FILE PATH: O:\H8108_Lift Station Rehabilitation And Reconstruction (IDS)\6 Drawings\Electrical\Working\Market St. #2\H8108_MKT-E-04.dwg

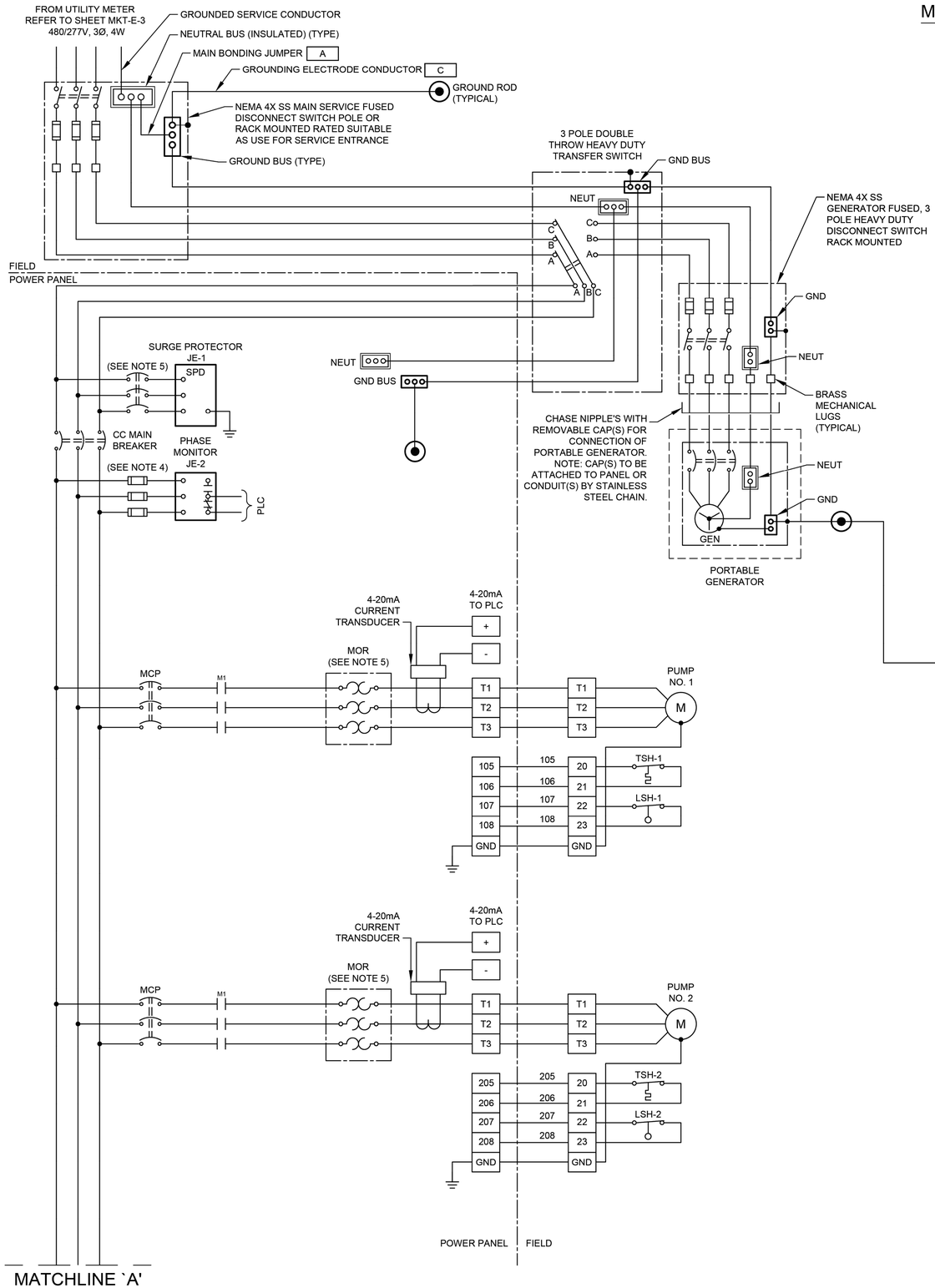

MATCHLINE `A'

POWER PANEL | FIELD

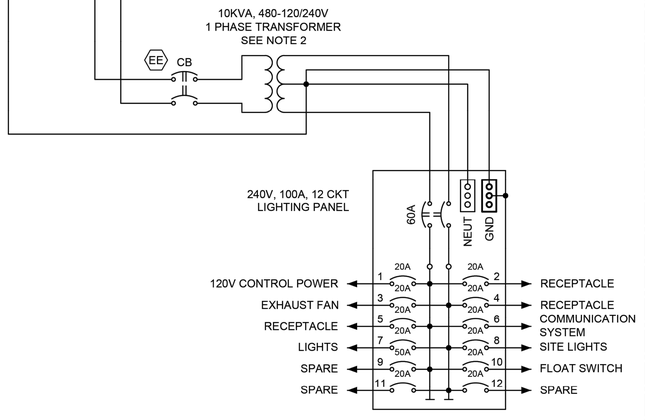

POWER WIRING DIAGRAM
NTS

NOTES:

1. UNLESS OTHERWISE INDICATED, ALL DEVICES WITHOUT FURTHER DESIGNATION ARE LOCATED AT THE MOTOR CONTROL CENTER (MCC).
2. CONTRACTOR TO REVISE DWG. BASED ON MANUFACTURE AND SIZE.
3. CONTRACTOR SHALL TERMINATE POWER & CONTROL WIRES PER MANUFACTURER'S REQUIREMENTS.
4. PROVIDE FUSE SIZE ACCORDING TO MANUFACTURER'S REQUIREMENTS.
5. PROVIDE BREAKER SIZE ACCORDING TO MANUFACTURER'S REQUIREMENTS.
6. THE COMBINATION OF CT AND MOTOR OVERLOAD RELAY IF REQUIRED.

NO.	DATE	REVISION	APP.

FOR INTERIM REVIEW
ONLY NOT INTENDED FOR
PERMIT, BIDDING OR
CONSTRUCTION PURPOSES.
ENGINEER:
HOSS FOROUZAN
P.E. SERIAL NO.77748
12/15/2025

GAI
Gupta & Associates, Inc.
CONSULTING ENGINEERING
Registration No. F-2593
302 Dennis St.,
Houston, Texas 77006
Tel: 713-636-2936
Fax: 713-636-2987
email: hforouzan@gaiconsulting.com

IDS Engineering Group
13430 NW. Freeway
Suite 700
Houston, Tx. 77040
713.462.3178
TxEng Firm 2726
TxSurv Firm 10110700

CITY OF HOUSTON
HOUSTON PUBLIC WORKS

LIFT STATION RENEWAL AND REPLACEMENT FY 2023

MARKET ST. NO.2 LIFT STATION THREE-LINE DIAGRAM

WBS NUMBER	FOR CITY OF HOUSTON USE ONLY
R-000267-0179-4	
DRAWING SCALE	
HORIZ: VERT:	
CITY OF HOUSTON PM	
NAWARAJ PANTA, P.E.	
DWG. NO. MKT-E-4	SHEET NO. 176 OF 321

IDS JOB No. 0057-085-00

PLOTTED: 12/11/2025 8:26 PM

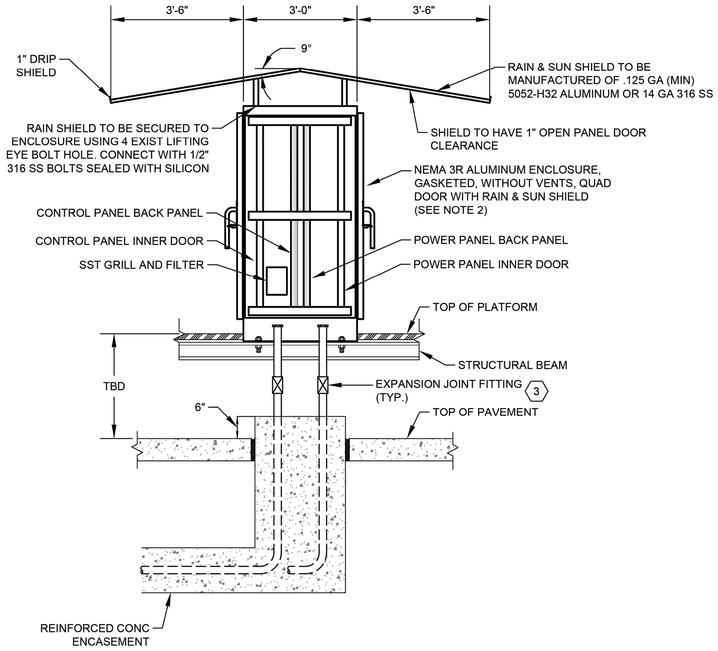

CONTROL CABINET ENCLOSURE WITH PLATFORM

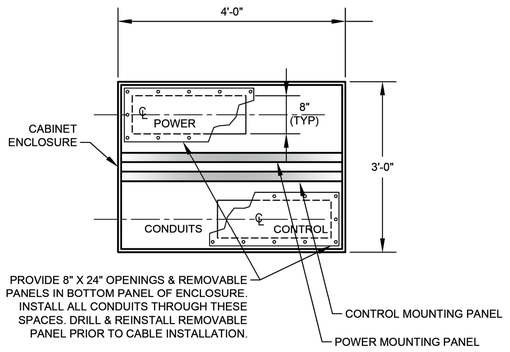

SECTION 2 / NTS -

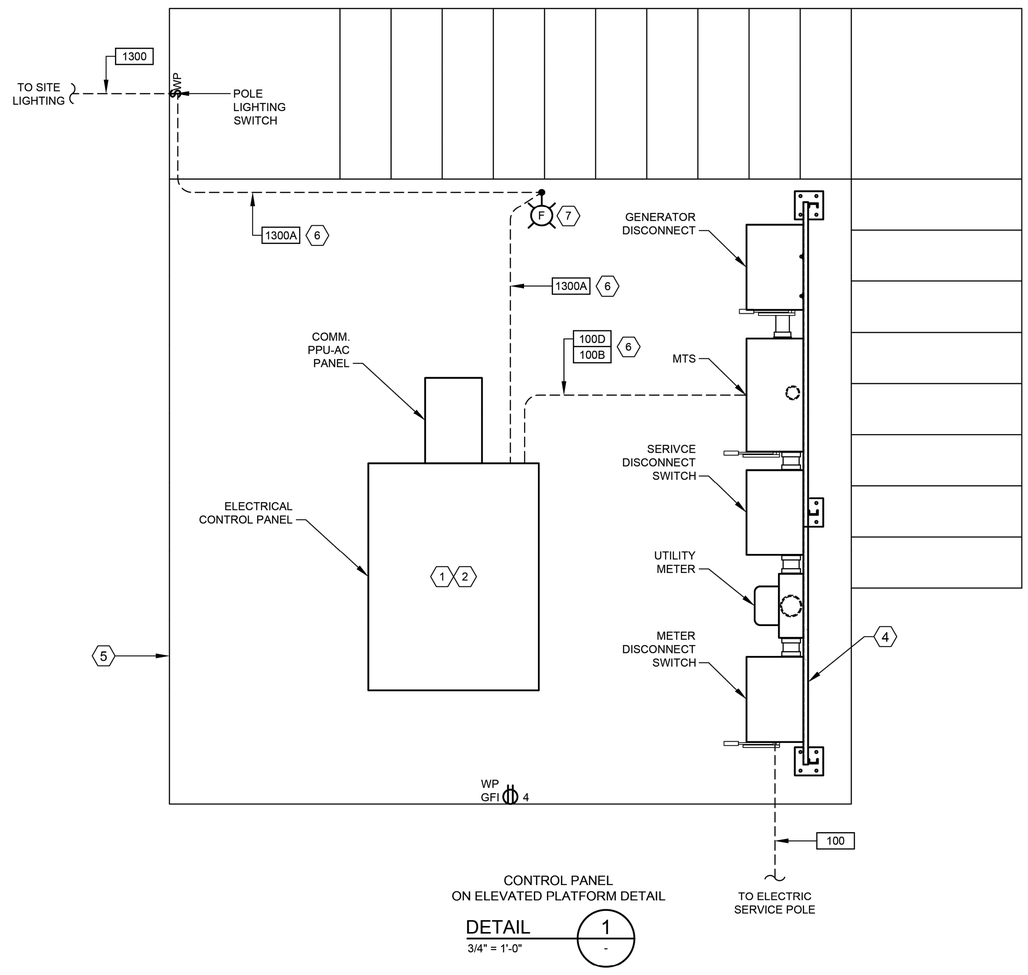

CONTROL PANEL ON ELEVATED PLATFORM DETAIL

DETAIL 1 / 3/4" = 1'-0" -

NOTES:

1. SEE SHEET MKT-I-4 FOR EQUIPMENT SCHEDULE.
2. REFER TO SPEC 13325-8 FOR PANEL DIMENSIONS.
3. EXPANSION JOINT FITTINGS AS REQUIRED.
4. REFER TO SERVICE RACK FOR DETAIL.
5. REFER TO STRUCTURAL DRAWINGS FOR PLATFORM DETAILS.
6. CONDUIT TO BE MOUNTED BELOW PLATFORM GRATING.
7. DUSK TO DAWN PHOTOCELL CONTROL.

NO.	DATE	REVISION	APP.

FOR INTERIM REVIEW
ONLY NOT INTENDED FOR
PERMIT, BIDDING OR
CONSTRUCTION PURPOSES.
ENGINEER:
HOSS FOROUZAN
P.E. SERIAL NO.77748
12/15/2025

GAI
Gupta & Associates, Inc.
CONSULTING ENGINEERING
Registration No. F-2593
302 Dennis St.,
Houston, Texas 77006
Tel: 713-636-2936
Fax: 713-636-2987
email: hforouzan@gaiconsulting.com

IDS Engineering Group
13430 NW. Freeway
Suite 700
Houston, Tx. 77040
713.462.3178
TxEng Firm 2726
TxSurv Firm 10110700

CITY OF HOUSTON
HOUSTON PUBLIC WORKS

LIFT STATION RENEWAL
AND REPLACEMENT FY 2023

MARKET ST. NO.2 LIFT STA. CNTL. CAB. ENCLO. DETL.

WBS NUMBER	FOR CITY OF HOUSTON USE ONLY
R-000267-0179-4	
DRAWING SCALE	
HORIZ: VERT:	
CITY OF HOUSTON PM	
NAWARAJ PANTA, P.E.	
DWG. NO. MKT-E-5	SHEET NO. 177 OF 321

IDS JOB No. 0057-085-00

FILE PATH: O:\H8108_Lift Station Rehabilitation And Reconstruction (IDS)\6 Drawings\Electrical\Working\Market St. #2\H8108_MKT-E-05.dwg

PLOTTED: 12/11/2025 8:26 PM

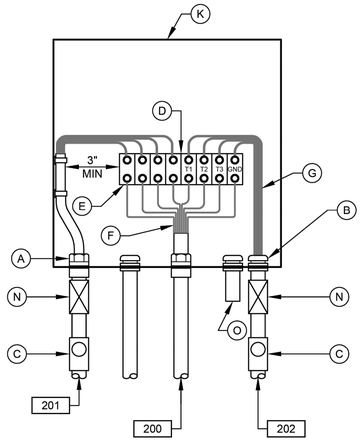

PUMP NO.1
JUNCTION BOX

DETAIL 3
NTS
(SEE NOTE 7)

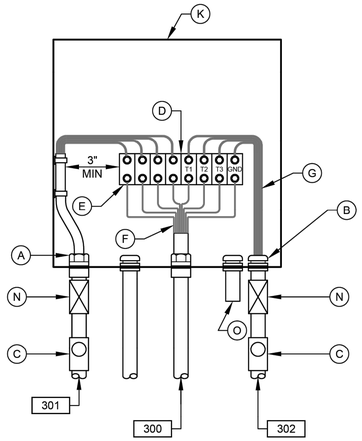

PUMP NO.2
JUNCTION BOX

DETAIL 4
NTS
(SEE NOTE 7)

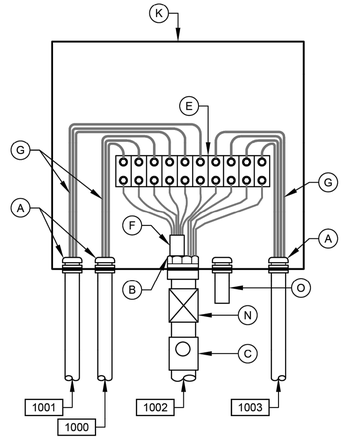

LEVEL TRANSMITTER
JUNCTION BOX

DETAIL 5
NTS
(SEE NOTE 7)

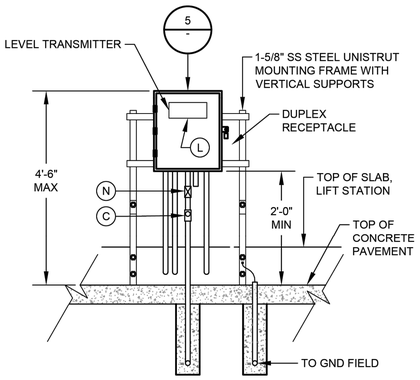

DETAIL 6
NTS
(SEE NOTE 9 & 12)

NOTES:

1. NAMEPLATES SHALL BE MOUNTED TO JUNCTION BOXES USING 316 STAINLESS STEEL HARDWARE.
2. MAINTAIN MINIMUM SEPARATION REQUIRED UNDER NEC ARTICLE 504, BETWEEN INTRINSICALLY SAFE CONTROL WIRING AND NON INTRINSICALLY SAFE MOTOR FEEDER WIRING.
3. UNLESS OTHERWISE NOTED, ALL EXTERIOR EXPOSED CONDUITS SHALL BE PVC COATED ALUMINUM.
4. UNLESS OTHERWISE NOTED, ALL NUTS, BOLTS, SCREWS WASHERS, ETC SHALL BE TYPE 316 STAINLESS STEEL.
5. ALL UNDERGROUND CONDUITS TO BE ENCASED IN REINFORCED CONCRETE DUCTBANK.
6. PROVIDE ANTI-CORROSIVE SPRAY ON ANY BARE METAL PARTS OR EXPOSED WIRE.
7. SEE WIRING SCHEMATICS FOR TERMINALS AND WIRE NUMBERS.
8. ANY CONDUIT REQUIRING A CSBE SEAL, SHALL BE A MINIMUM SIZE OF 2 1/2" PER CABLE.
9. DETAIL SHOWN MAY BE MODIFIED PER SITE SITUATION.
10. COORDINATE WITH WASTE WATER OPERATIONS ELECTRICAL ORGANIZATION FOR THE OPENING OF JUNCTION BOXES TO THE SIDE OF WET WELL IF REQUIRED DURING CONSTRUCTION.
11. THE ENCLOSURES WITH ELECTRICAL CIRCUITS SHALL BE A MINIMUM OF 5 FEET FROM ANY CLASSIFIED AREA, OTHERWISE EXPLOSION PROOF TYPE ENCLOSURES SHALL BE USED.

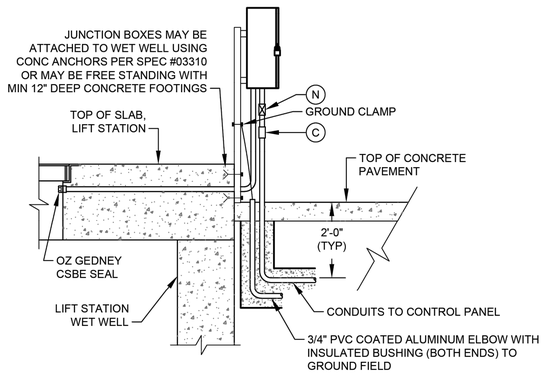

TYP SIDE VIEW FOR DETAIL 1, 2, & 6

(SEE NOTE 10)

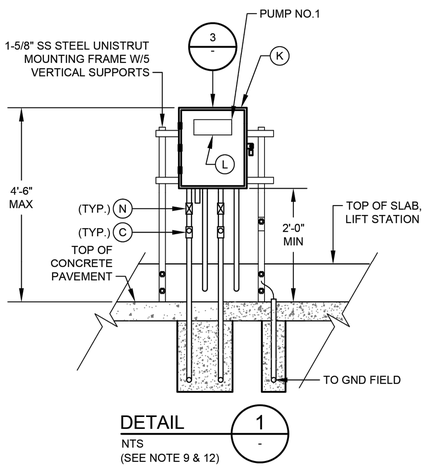

DETAIL 1
NTS
(SEE NOTE 9 & 12)

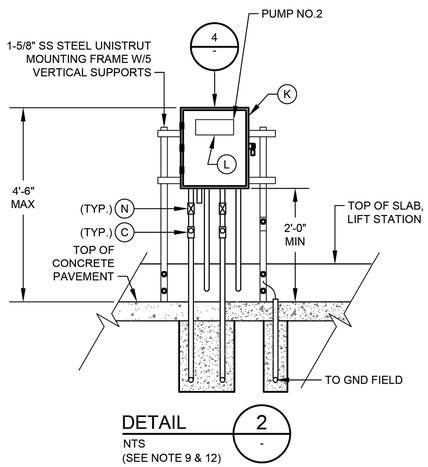

DETAIL 2
NTS
(SEE NOTE 9 & 12)

JUNCTION BOX EQUIPMENT SCHEDULE

A - OZ GEDNEY CSBE SEAL
B - WATERTIGHT CONDUIT HUB WITH INSULATED BUSHING
C - CLASS I, DIV 1, EXPLOSION PROOF SEAL INSTALLED PER NEC DIV 501
D - POWER TERMINAL BLOCK W/SCREW DOWN BOX LUGS
E - CONTROL TERM BLOCK W/SCREW DOWN BOX LUGS
F - MULTI-CONDUCTOR CABLE, REMOVE OUTER JACKET AS SHOWN
G - WIRING AS SCHEDULED
H - NOT USED.
I - NOT USED.
J - NOT USED
K - NEMA 6P STAINLESS STEEL JUNCTION BOX WITH GASKETED FRONT COVER, SINGLE QUARTER TURN, OIL-TIGHT LATCH AND PADLOCKING PROVISIONS, MINIMUM SIZE: 12"W X 16"H X 6"D
L - NAMEPLATE, SEE SPECIFICATIONES (SEE NAMEPLATE SCHEDULE)
M - NOT USED.
N - EXPANSION FITTING
O - DRAIN VENT

NO.	DATE	REVISION	APP.

FOR INTERIM REVIEW ONLY NOT INTENDED FOR PERMIT, BIDDING OR CONSTRUCTION PURPOSES.
ENGINEER:
HOSS FOROUZAN
P.E. SERIAL NO.77748
12/15/2025

GAI
Gupta & Associates, Inc.
CONSULTING ENGINEERING
Registration No. F-2593
302 Dennis St.,
Houston, Texas 77006
Tel: 713-636-2936
Fax: 713-636-2987
email: hforouzan@gaiconsulting.com

IDS Engineering Group
13430 NW. Freeway
Suite 700
Houston, Tx. 77040
713.462.3178
TxEng Firm 2726
TxSurv Firm 10110700

CITY OF HOUSTON
HOUSTON PUBLIC WORKS

LIFT STATION RENEWAL AND REPLACEMENT FY 2023

MARKET ST. NO.2 LIFT STATION JUNCTION BOX DETAIL

WBS NUMBER	FOR CITY OF HOUSTON USE ONLY
R-000267-0179-4	
DRAWING SCALE	
HORIZ: VERT:	
CITY OF HOUSTON PM	
NAWARAJ PANTA, P.E.	

DWG. NO.	SHEET NO. 178 OF 321
MKT-E-6	

IDS JOB No. 0057-085-00

FILE PATH: O:\H8108_Lift Station Rehabilitation And Reconstruction (IDS)\6 Drawings\Electrical\Working\Market St. #2\H8108_MKT-E-06.dwg

PLOTTED: 12/11/2025 8:26 PM

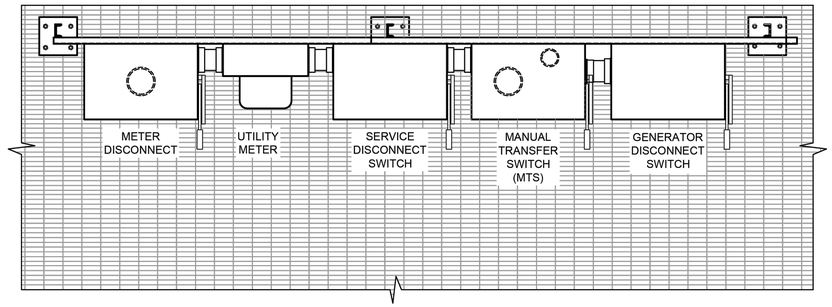

PLAN

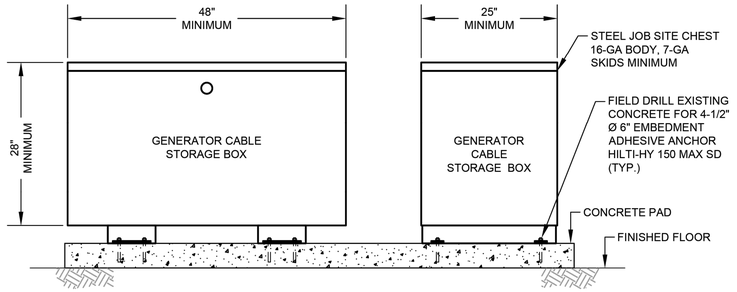

GENERATOR CABLE STORAGE BOX SIDE VIEW

DETAIL 20
NTS. -

ALLOWABLE DEVICE AMPACITY CHART DLO RHW-2 CAM-LOK CONNECTOR CABLE		
CABLE SIZE AWG	AMPS	CABLE LENGTH
#1	220	65 FEET
4/0	400	65 FEET

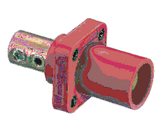

QUICK CONNECT FOR GENERATOR

PHOTOGRAPH 1
NTS. -



QUICK CONNECT FOR GENERATOR

PHOTOGRAPH 2
NTS. -

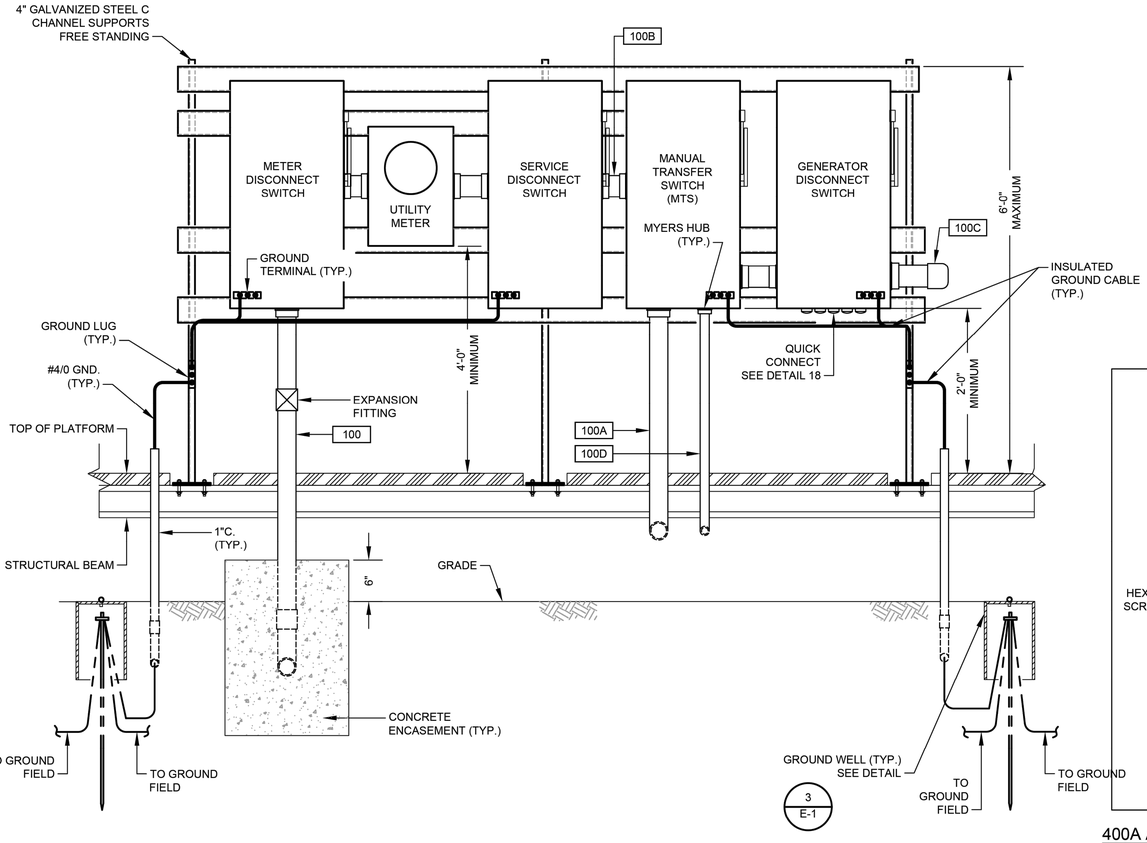

SERVICE MOUNTING RACK

DETAIL 1
NTS. -

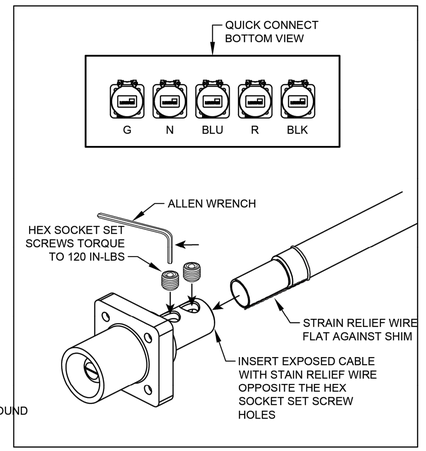

400A AND LESS FEMALE PLUG CABLE TERMINATION

DETAIL 18
NTS. -

REFER TO PHOTO NO.1

NOTES:

1. CONTRACTOR TO INSTALL CONNECTORS AT BOTH ENDS OF CABLE.

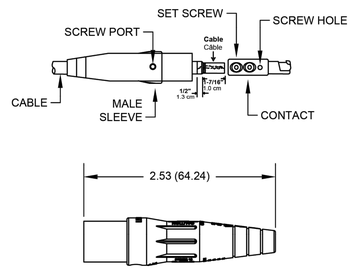

400A AND LESS MALE PLUG CABLE TERMINATION

DETAIL 19
NTS. -

REFER TO PHOTO NO.2

FOR INTERIM REVIEW
ONLY NOT INTENDED FOR
PERMIT, BIDDING OR
CONSTRUCTION PURPOSES.
ENGINEER:
HOSS FOROUZAN
P.E. SERIAL NO.77748
12/15/2025

GAI
Gupta & Associates, Inc.
CONSULTING ENGINEERING
Registration No. F-2593
302 Dennis St.,
Houston, Texas 77006
Tel: 713-636-2936
Fax: 713-636-2987
email: hforouzan@gaiconsulting.com

IDS Engineering Group
13430 NW. Freeway
Suite 700
Houston, Tx. 77040
713.462.3178
TxEng Firm 2726
TxSurv Firm 10110700

CITY OF HOUSTON
HOUSTON PUBLIC WORKS

LIFT STATION RENEWAL AND REPLACEMENT FY 2023

MARKET ST. NO.2 LIFT STATION SERVICE RACK DETAIL

WBS NUMBER	FOR CITY OF HOUSTON USE ONLY
R-000267-0179-4	
DRAWING SCALE	
HORIZ: VERT:	
CITY OF HOUSTON PM	
NAWARAJ PANTA, P.E.	
SHEET NO. 179 OF 321	

DWG. NO. MKT–E–7

NO.	DATE	REVISION	APP.

FILE PATH: O:\H8108_Lift Station Rehabilitation And Reconstruction (IDS)\6 Drawings\Electrical\Working\Market St. #2\H8108_MKT-E-07.dwg

IDS JOB No. 0057-085-00

PLOTTED: 12/11/2025 8:26 PM

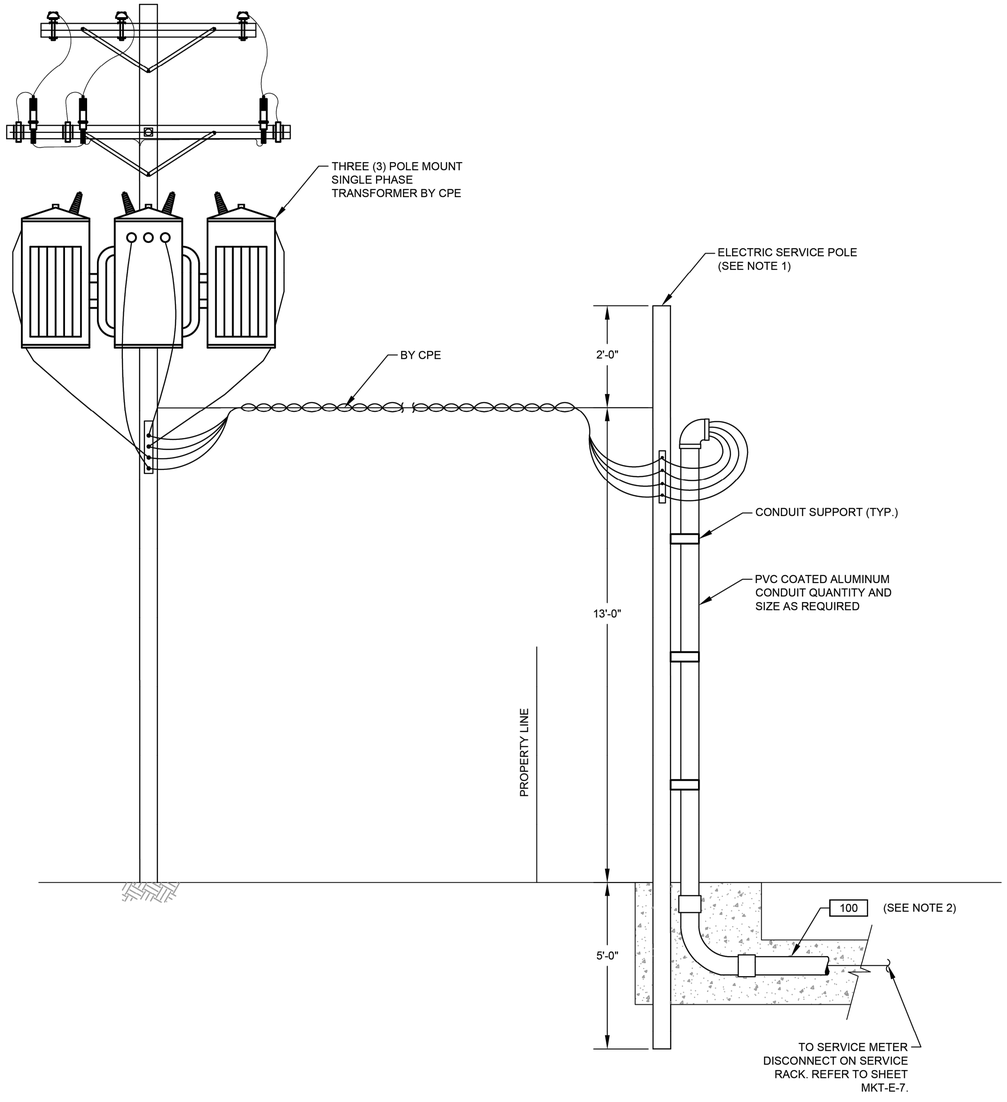

ELECTRICAL SERVICE ENTRANCE

DETAIL 1
NTS. -

NOTES:

1. WOODEN POLE 20' LONG. TOP DIAMETER 6", BOTTOM DIAMETER 8" PROVIDED AND INSTALLED BY ELECTRICAL CONTRACTOR.
2. ELECTRICAL SERVICE FEEDER PROVIDED AND INSTALLED BY ELECTRICAL CONTRACTOR. COORDINATE WITH CPE FOR THE REQUIREMENTS OF THE INSTALLATION.

NO.	DATE	REVISION	APP.

FOR INTERIM REVIEW
ONLY NOT INTENDED FOR
PERMIT, BIDDING OR
CONSTRUCTION PURPOSES.
ENGINEER:
HOSS FOROUZAN
P.E. SERIAL NO.77748
12/15/2025

GAI
Gupta & Associates, Inc.
CONSULTING ENGINEERING
Registration No. F-2593
302 Dennis St.,
Houston, Texas 77006
Tel: 713-636-2936
Fax: 713-636-2987
email: hforouzan@gaiconsulting.com

IDS Engineering Group
13430 NW. Freeway
Suite 700
Houston, Tx. 77040
713.462.3178
TxEng Firm 2726
TxSurv Firm 10110700

CITY OF HOUSTON
HOUSTON PUBLIC WORKS

LIFT STATION RENEWAL
AND REPLACEMENT FY 2023

MARKET ST. NO.2 LIFT STATION SERVICE POLE DETAIL

WBS NUMBER	FOR CITY OF HOUSTON USE ONLY
R-000267-0179-4	
DRAWING SCALE	
HORIZ: VERT:	
CITY OF HOUSTON PM	
NAWARAJ PANTA, P.E.	

DWG. NO.	SHEET NO.
MKT-E-8	180 OF 321

IDS JOB No. 0057-085-00

FILE PATH: O:\H8108_Lift Station Rehabilitation And Reconstruction (IDS)\6 Drawings\Electrical\Working\Market St. #2\H8108_MKT-E-08.dwg

	DESCRIPTION	SERVICE		ROUTING			CONDUIT & WIRE SIZE
		VOLTAGE	AMPS OR HP	FROM	TO	VIA	
A	MAIN BONDING JUMPER	--	--	MAIN FUSED DISCONNECT NEUTRAL	MAIN FUSED DISCONNECT GROUND	--	#4 CU GND.
B	EQUIPMENT BONDING JUMPER	--	--	MCC/POWER PANEL ENCLOSURE	POWER/CONTROL PANEL & EQUIPMENT	--	#4 CU GND.
C	GROUNDED ELECTRODE CONDUCTOR	--	--	GROUNDING ELECTRODE	MAIN SERVICE FUSED DISCONNECT GROUNDING	--	#4 CU GND.
100	SERVICE ENTRANCE	480V	200A	UTILITY POWER SERVICE	METER DISCONNECT	--	3 #3/0 AWG., #4 NEUT. #3 GND., 2-1/2" C.
100A	UTILITY POWER ENTRANCE	480V	200A	SERVICE DISCONNECT SWITCH	MTS	--	3 #3/0 AWG., #4 NEUT. #3 GND., 2-1/2" C.
100B	NORMAL/EMERGENCY POWER STATUS	24VDC	--	MTS	CONTROL POWER	--	4#14 AWG., #14 GND., 3/4"C.
100C	EMERGENCY POWER	480V	200A	GENERATOR DISCONNECT	PORTABLE GENERATOR	CAPPED CONDUIT	--
100D	MCC POWER	480V	--	MTS	CONTROL PANEL	--	3 #3/0 AWG., #6 NEUT. #6 GND., 2-1/2" C.
101	GROUND ELECTRODE CONDUCTOR	--	--	MCC ENCLOSURE	GROUND FIELD	--	#6 CU GND.
104	GROUND ELECTRODE CONDUCTOR	--	--	CONTROL PANEL	GROUND FIELD	--	#6 CU GND.
105	COMMUNICATION	--	--	COMMUNICATION POLE	CONTROL PANEL	--	1-1/2"C. CAT 5E
200	PUMP NO. 1 POWER	480V	5.8 HP	PUMP NO. 1	PUMP NO. 1 JUNCTION BOX	--	MANUFACTURER CABLE IN 2-1/2"C.
201	PUMP NO. 1 CONTROLS	120V	--	PUMP NO. 1	PUMP NO. 1 JUNCTION BOX	--	MANUFACTURER CABLE IN 2-1/2"C.
202	PUMP NO. 1 POWER	480V	5.8 HP	PUMP NO. 1 JUNCTION BOX	PUMP STARTER	--	3#10, #10 GND., 4#14., 2"C.
300	PUMP NO. 2 POWER	480V	5.8 HP	PUMP NO. 2	PUMP NO. 2 JUNCTION BOX	--	MANUFACTURER CABLE IN 2-1/2"C.
301	PUMP NO. 2 CONTROLS	120V	--	PUMP NO. 2	PUMP NO. 2 JUNCTION BOX	--	MANUFACTURER CABLE IN 2-1/2"C.
302	PUMP NO. 2 POWER	480V	5.8 HP	PUMP NO. 2 JUNCTION BOX	PUMP STARTER	--	3#10, #10 GND., 4#14, 2"C.
600	LIGHTING PANEL FEEDER	480V	30A	MOTOR CONTROL CENTER	LIGHTING TRANSFORMER	--	2#6, #6 GND., 1"C.
601	LIGHTING PANEL GROUND	--	--	LIGHTING PANEL	GROUND FIELD	--	#8 GND., 1"C.
602	LIGHTING PANEL FEEDER	120/240V	--	LIGHTING TRANSFORMER	LIGHTING PANEL	--	3#4, #6 GND., 1-1/4" C.
900	INTRUSION ALARM	24VDC	--	MOTION SWITCH	CONTROL PANEL	--	2#14, 3/4" C.
1000	LEVEL TRANSMITTER	24VDC	--	TRANSMITTER JUNCTION BOX	TRANSMITTER JUNCTION BOX	--	MANUFACTURER'S CABLE IN 2-1/2"C
1001	LEVEL TRANSMITTER	24VDC	--	TRANSMITTER JUNCTION BOX	TRANSMITTER JUNCTION BOX	--	MANUFACTURER'S CABLE IN 2-1/2"C
1002	COMBINED LEVEL TRANSMITTERS & FLOAT SWITCH	24VDC	--	CONTROL PANEL	TRANSMITTER JUNCTION BOX	--	2-TRI, 4#14, 2" C.
1003	WELL FLOAT SWITCHES	24VDC	--	TRANSMITTER JUNCTION BOX	FLOAT SWITCH NO.1 & NO.2	--	MANUFACTURER'S CABLE IN 2-1/2"C
1100	120VAC FOR RECEPTACLE	-	--	LIGHTING PANEL	RECEPTACLE NEXT TO TRANSMITTER J-BOX	--	2#12, #12G, 1" C.
1200	120VAC FOR RECEPTACLE	-	--	LIGHTING PANEL	RECEPTACLE NEXT TO PUMP NO.2 J-BOX	--	2#12, #12G, 1" C.
1300	SITE LIGHTING	120V	--	LIGHTING PANEL	SITE LIGHTING SWITCH	--	2#12 AWG., #12 GND., 1"C.

NO.	DATE	REVISION	APP.

FOR INTERIM REVIEW
ONLY NOT INTENDED FOR
PERMIT, BIDDING OR
CONSTRUCTION PURPOSES.
ENGINEER:
HOSS FOROUZAN
P.E. SERIAL NO.77748
12/15/2025

GAI
Gupta & Associates, Inc.
CONSULTING ENGINEERING
Registration No. F-2593

302 Dennis St.,
Houston, Texas 77006
Tel: 713-636-2936
Fax: 713-636-2987
email: hforouzan@gaiconsulting.com

IDS Engineering Group
13430 NW. Freeway
Suite 700
Houston, Tx. 77040
713.462.3178
TxEng Firm 2726
TxSurv Firm 10110700

CITY OF HOUSTON
HOUSTON PUBLIC WORKS

LIFT STATION RENEWAL
AND REPLACEMENT FY 2023

MARKET ST. NO.2 LIFT STATION CONDUIT SCHEDULE

WBS NUMBER	FOR CITY OF HOUSTON USE ONLY
R-000267-0179-4	
DRAWING SCALE	
HORIZ: VERT:	
CITY OF HOUSTON PM	
NAWARAJ PANTA, P.E.	
SHEET NO. 181 OF 321	

DWG. NO.
MKT-E-9

IDS JOB No. 0057-085-00

PLOTTED: 12/11/2025 8:26 PM

FILE PATH: O:\H8108_Lift Station Rehabilitation And Reconstruction (IDS)\6 Drawings\Electrical\Working\Market St. #2\H8108_MKT-E-09.dwg

PLOTTED: 12/11/2025 8:16 PM

HMI

INFLUENT PUMP NO. 1: SEAL FAIL ALARM MA 1 | MOTOR OVERLOAD ALARM MO 1 | MOTOR CURRENT II 1 | HIGH TEMP ALARM TH 1 | IN HAND HI 1 | IN AUTO IA 1 | ON/OFF YFS 1 | START/STOP YCS 1

INFLUENT PUMP NO. 2: SEAL FAIL ALARM MA 2 | MOTOR OVERLOAD ALARM MO 2 | MOTOR CURRENT II 2 | HIGH TEMP ALARM TH 2 | IN HAND HI 2 | IN AUTO IA 2 | ON/OFF YFS 2 | START/STOP YCS 2

ALARMS RESET RE 1

PRIMARY PLC: FLOAT HIGH-HIGH WETWELL LEVEL LAHH 1A

BACKUP PLC: PUMP NO. 1 START/STOP YCS 1A | PUMP NO. 2 START/STOP YCS 2A

CONTROL PANEL PLC

CONTROL PANEL

480V

INFLUENT PUMP NO. 1: H/O/A | RUN

INFLUENT PUMP NO. 2: H/O/A | RUN

PRIMARY PLC (G)

BACKUP PLC (G)

INFLUENT PUMP CONTROL PANEL

ALARMS RESET | OIT

TO SHEET MKT-I-2

MKT-I-2

MKT-I-2

WET WELL

LT 1

LE 1

LT 2

LE 2

LSH 1A

TSH 1A

M

HIGHHIGH LEVEL FLOAT SWITCH FS2

LSH 2A

TSH 2A

M

INFLUENT DISCHARGE

HIGH LEVEL FLOAT SWITCH FS1

NO.	DATE	REVISION	APP.

FOR INTERIM REVIEW ONLY NOT INTENDED FOR PERMIT, BIDDING OR CONSTRUCTION PURPOSES.
ENGINEER:
HOSS FOROUZAN
P.E. SERIAL NO.77748
12/15/2025

GAI
Gupta & Associates, Inc.
CONSULTING ENGINEERING
Registration No. F-2593
302 Dennis St.,
Houston, Texas 77006
Tel: 713-636-2936
Fax: 713-636-2987
email: hforouzan@gaiconsulting.com

IDS Engineering Group
13430 NW. Freeway
Suite 700
Houston, Tx. 77040
713.462.3178
TxEng Firm 2726
TxSurv Firm 10110700

CITY OF HOUSTON
HOUSTON PUBLIC WORKS

LIFT STATION RENEWAL AND REPLACEMENT FY 2023

MARKET ST. NO.2 LIFT STATION P&ID DIAGRAM–I

WBS NUMBER	FOR CITY OF HOUSTON USE ONLY
R-000267-0179-4	
DRAWING SCALE	
HORIZ: VERT:	
CITY OF HOUSTON PM	
NAWARAJ PANTA, P.E.	
SHEET NO. 182 OF 321	

DWG. NO. MKT–I–1

IDS JOB No. 0057-085-00

FILE PATH: O:\H8108_Lift Station Rehabilitation And Reconstruction (IDS)\6 Drawings\Instrumentation And Control\Working\Market St. #2\H8108_MKT–I–01.dwg

PLOTTED: 12/11/2025 8:16 PM

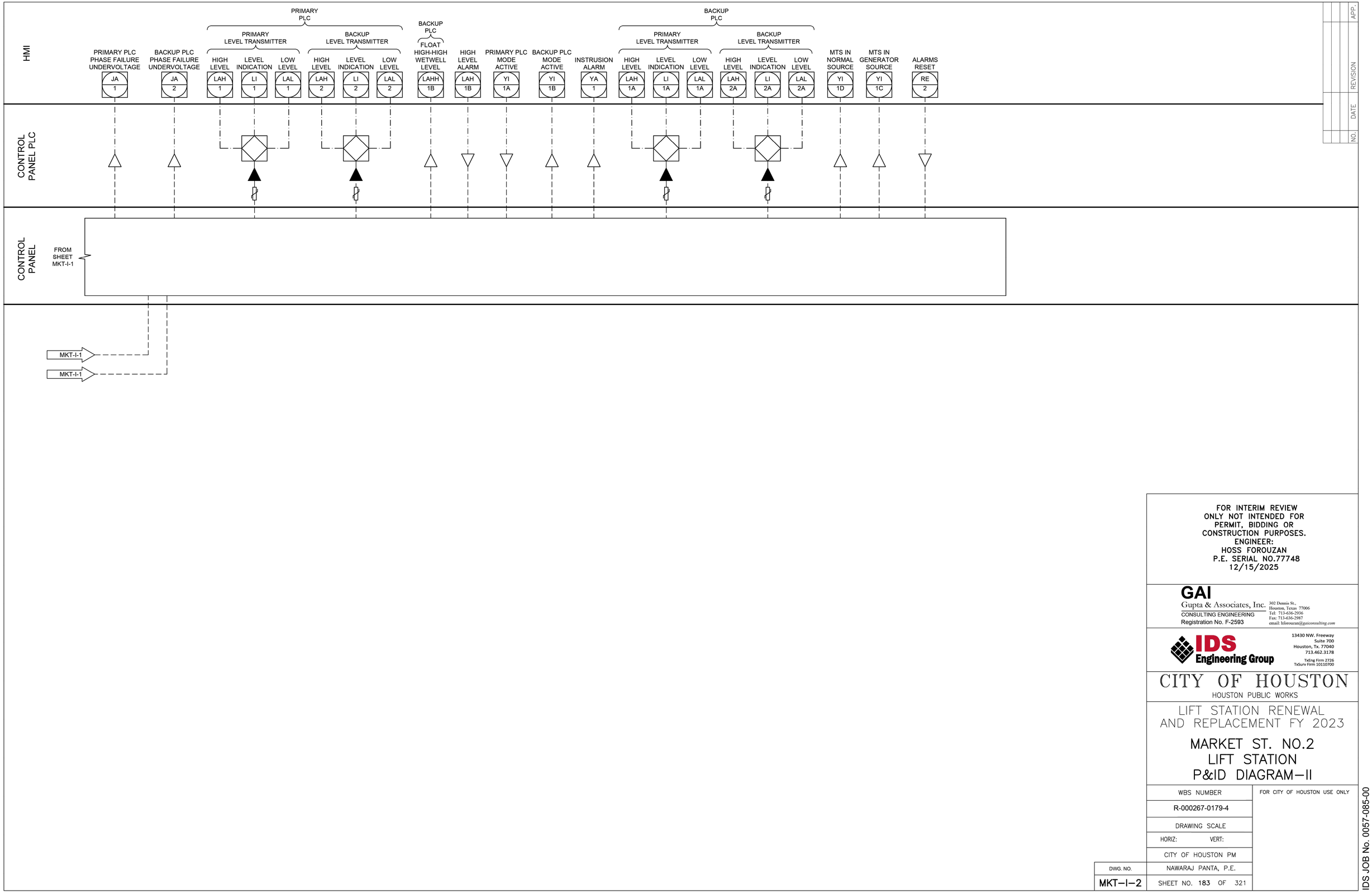

NO.	DATE	REVISION	APP.

FOR INTERIM REVIEW
ONLY NOT INTENDED FOR
PERMIT, BIDDING OR
CONSTRUCTION PURPOSES.
ENGINEER:
HOSS FOROUZAN
P.E. SERIAL NO.77748
12/15/2025

GAI
Gupta & Associates, Inc.
CONSULTING ENGINEERING
Registration No. F-2593
302 Dennis St.,
Houston, Texas 77006
Tel: 713-636-2936
Fax: 713-636-2987
email: hforouzan@gaiconsulting.com

IDS Engineering Group
13430 NW. Freeway
Suite 700
Houston, Tx. 77040
713.462.3178
TxEng Firm 2726
TxSurv Firm 10110700

CITY OF HOUSTON
HOUSTON PUBLIC WORKS

LIFT STATION RENEWAL
AND REPLACEMENT FY 2023

MARKET ST. NO.2
LIFT STATION
P&ID DIAGRAM–II

WBS NUMBER	FOR CITY OF HOUSTON USE ONLY
R-000267-0179-4	
DRAWING SCALE	
HORIZ: VERT:	
CITY OF HOUSTON PM	
NAWARAJ PANTA, P.E.	
SHEET NO. 183 OF 321	

DWG. NO. MKT–I–2

IDS JOB No. 0057-085-00

FILE PATH: O:\H8108_Lift Station Rehabilitation And Reconstruction (IDS)\6 Drawings\Instrumentation And Control\Working\Market St. #2\H8108_MKT–I–02.dwg

PLOTTED: 12/11/2025 8:16 PM

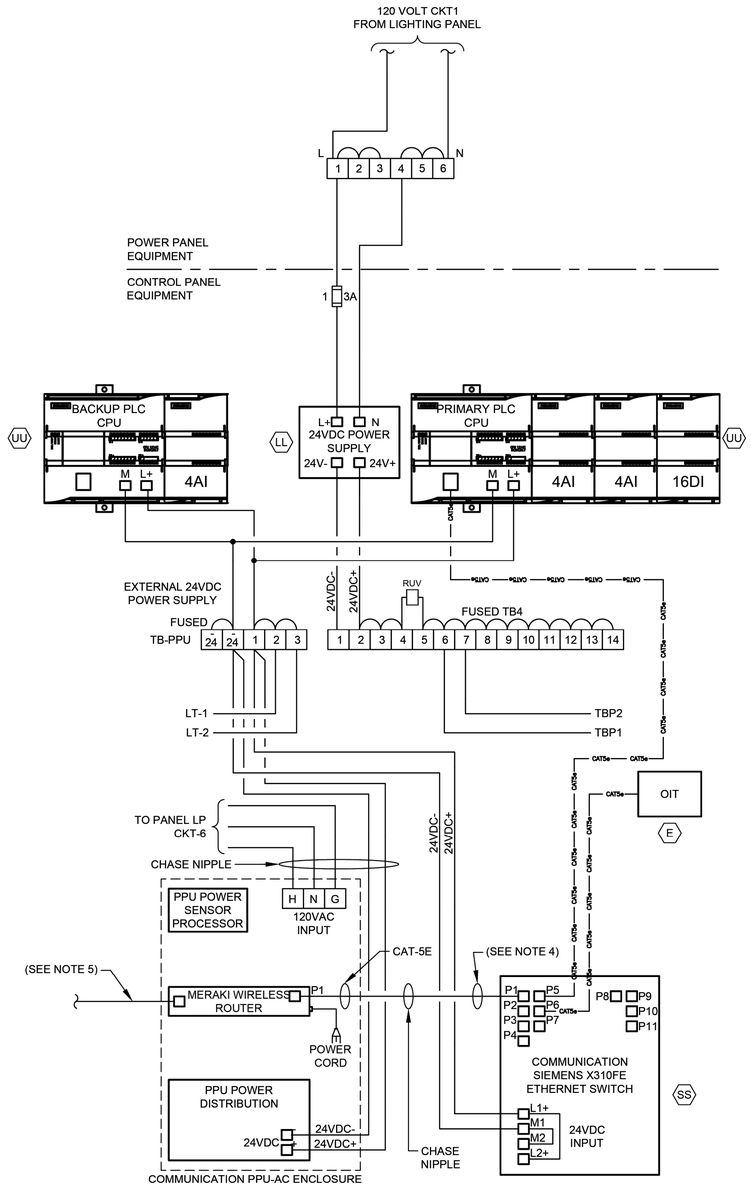

CONTROL POWER &
COMMUNICATIONS WIRING

DIAGRAM

NTS

(SEE NOTE 2 & 6)

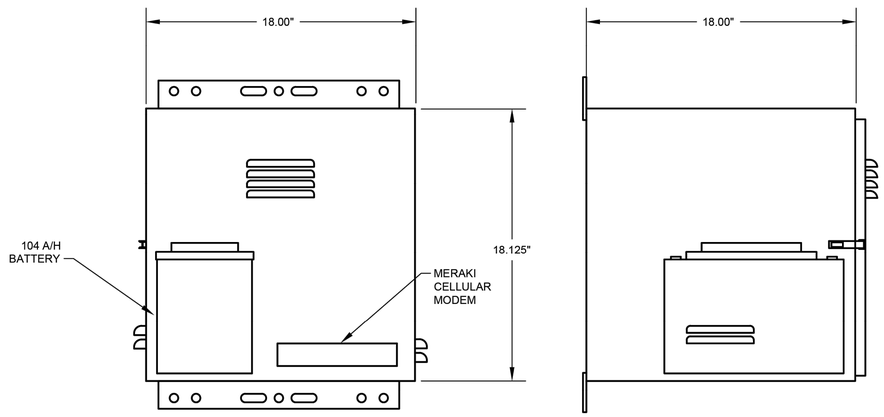

PPU-AC ENCLOSURE
FRONT VIEW

PPU-AC ENCLOSURE
SIDE VIEW

PPU-AC
CONTROL ENCLOSURE

ELEVATION

NTS

(SEE NOTE 7)

NOTES:

1. FOR DESCRIPTION AND RATINGS OF ITEMS INDICATED WITH ITEM TAG, SEE DEVICE RATINGS SCHEDULE.
2. REFER TO SPEC SECTION 16120 FOR CONDUCTOR COLOR CODE.
3. THE PLC POWER SUPPLY SHALL FEED THE 24VDC I/O.
4. ETHERNET CABLE FOR MERAKI CELLULAR ROUTER (P1).
5. POE CABLE TO RADIO.
6. COMMUNICATION PPU-AC & SCADA SHALL BE PROVIDED BY CONTRACTOR INCLUDING TO RUN CONDUITS & WIRES.
7. COORDINATE WITH VENDOR TO PROVIDE PROPER VENTILATION WHERE APPLICABLE.

GENERAL NOTES:

1. NO ELECTRICAL MATERIAL, APPARATUS, DEVICES, APPLIANCES, FIXTURES, OR EQUIPMENT SHALL BE SOLD OR INSTALLED IN THE CITY UNLESS THEY ARE IN CONFORMANCE WITH THE PROVISIONS OF SECTION 508 CITY OF HOUSTON ELECTRICAL CODE, THE LAWS OF THE STATE OF TEXAS AND ANY APPLICABLE RULES AND REGULATIONS ISSUED UNDER THE AUTHORITY OF THE STATE STATUES. THE MAKER'S NAME, TRADEMARK, OR OTHER IDENTIFICATION SYMBOL SHALL BE PLACED ON ALL ELECTRICAL MATERIALS, APPARATUS, DEVICES, APPLIANCES, FIXTURES, AND EQUIPMENT USED OR INSTALLED UNDER THE PROVISIONS OF THIS CODE. ALL ELECTRICAL MATERIALS AND EQUIPMENT SHALL BE LISTED AND LABELED FOR THE INTENDED USE AND SHALL BE INCLUDED IN A LIST PUBLISHED BY AN APPROVAL AGENCY.

NO.	DATE	REVISION	APP.

FOR INTERIM REVIEW
ONLY NOT INTENDED FOR
PERMIT, BIDDING OR
CONSTRUCTION PURPOSES.
ENGINEER:
HOSS FOROUZAN
P.E. SERIAL NO.77748
12/15/2025

GAI
Gupta & Associates, Inc.
CONSULTING ENGINEERING
Registration No. F-2593
302 Dennis St.,
Houston, Texas 77006
Tel: 713-636-2936
Fax: 713-636-2987
email: hforouzan@gaiconsulting.com

IDS Engineering Group
13430 NW. Freeway
Suite 700
Houston, Tx. 77040
713.462.3178
TxEng Firm 2726
TxSurv Firm 10110700

CITY OF HOUSTON

HOUSTON PUBLIC WORKS

LIFT STATION RENEWAL
AND REPLACEMENT FY 2023

MARKET ST. NO.2 LIFT STATION COMMUNICATION DIAGRAM

WBS NUMBER	FOR CITY OF HOUSTON USE ONLY
R-000267-0179-4	
DRAWING SCALE	
HORIZ: VERT:	
CITY OF HOUSTON PM	
NAWARAJ PANTA, P.E.	
SHEET NO. 184 OF 321	

DWG. NO.
MKT-I-3

IDS JOB No. 0057-085-00

FILE PATH: O:\H8108_Lift Station Rehabilitation And Reconstruction (IDS)\6 Drawings\Instrumentation And Control\Working\Market St. #2\H8108_MKT-I-03.dwg

PLOTTED: 12/11/2025 8:16 PM

FILE PATH: O:\H8108_Lift Station Rehabilitation And Reconstruction (IDS)\6 Drawings\Instrumentation And Control\Working\Market St. #2\H8108_MKT-I-04.dwg

EQUIPMENT AND DEVICE SCHEDULE

ITEM	QUANTITY	DESCRIPTION
A	1	PANEL BOARD, 120/240V, 1 PHASE, 3 WIRE, 100A, 12 CKTS
B	2	FULL VOLTAGE, NON-REVERSING, SINGLE SPEED, AUTOMATIC MOTOR STARTER W/120 VOLT CONTROL COIL, NEMA SIZE AS SCHEDULED.
C	2	TIME DELAY RELAY WITH THREE FORM C CONTACTS, 120VAC COIL AND 11 PIN SOCKET BASE.
D	1	SINGLE CHANNEL INTRINSICALLY SAFE RELAY
E	1	PROGRAMMING SCREEN (OIT)
F	2	HAND-OFF-AUTO SWITCH, 3 POSITION, HEAVY-DUTY, OILTIGHT WITH 2 SETS OF CONTACT BLOCKS (PUMP CONTROL)
G	2	INDICATING LIGHT, HEAVY DUTY, OILTIGHT, RED, 24 VDC, LED, WITH "RUN" LEGEND
H	1	PERPETUAL POWER UNIT (PPU)
I	1	PUMP ALARM RESET PUSHBUTTON
J	2	SWITCH FOR CABINET LIGHT, 120V, 20A, SPST
K	3	DUPLEX RECEPTACLE, 120V, 20A, 2 WIRE, GROUNDED
L	2	24" LED STRIP LIGHT 120V SUITABLE FOR ZERO DEGREE OPERATION.
M	1	SURGE PROTECTOR - INCOMING POWER
N	*	NOT USED.
P	2	CURRENT TRANSFORMER, RATIO AS SCHEDULED W/4-20mA OUTPUT.
Q	12	TERMINAL BLOCKS, SIZED FOR MOTOR POWER REQUIREMENTS
R	*	RELAY WITH THREE FORM C CONTACTS, AND 11 PIN SOCKET BASE
S	*	NOT USED.
T	*	NAMEPLATES, SEE SPECIFICATIONS (SEE NAMEPLATE SCHEDULE)
U	2	SOLID STATE MOTOR OVERLOAD RELAY
V	6	FUSE HOLDER & FUSES - PHASE FAILURE
W	1	NEMA 3R GASKETED ALUMINUM ENCLOSURE WITHOUT VENTS 72"H x 48"w x 36"D
X	1	DOOR MOUNTED ROTARY HANDLE DISCONNECT SWITCH (SUITABLE FOR ENVIRONMENT)
Y	1	THERMAL-MAGNETIC MOLDED CASE MAIN CIRCUIT BREAKER, SIZE AS SCHEDULED
Z	2	ADJUSTABLE INSTANTENOUS TRIP MOTOR CIRCUIT PROTECTOR, SIZE AS SCHEDULED
AA	*	TERMINAL BLOCKS
BB	2	EXTERNAL OVERLOAD RESET PUSHBUTTON MECHANISM
CC	2	ANALOG I/O SURGE SUPPRESSOR
DD	1	WIRE DUCT 2" WIDE x 2" DEEP MINIMUM
EE	1	THERMAL-MAGNETIC MODLED CASE CIRCUIT BREAKER FOR LIGHTING TRANSFORMER, SIZE AS SCHEDULED
FF	1	GROUND BUS
GG	1	10 KVA, 480 - 240/120V,1ϕ, 3W DRY TYPE NEMA 3R ENCLOSURE TRANSFORMER
HH	*	NOT USED.
II	1	120VAC - 24VAC POWER SUPPLY (AS REQUIRED)
JJ	11	CARTRIDGE FUSES & FUSE HOLDER
KK	8	QUARTER TURN CAPTIVE DOOR CLOSURE
LL	1	120VAC - 24VDC PLC POWER SUPPLY 5A
MM	2	MOTION SWITCH
NN	*	NOT USED
PP	2	INDICATING LED LIGHT, HEAVY DUTY, OILTIGHT, GREEN, 24 VDC, LED WITH " PRIMARY PLC" & "BACKUP PLC" LEGEND
QQ	*	NOT USED
RR	*	NOT USED
SS	1	COMMUNICATION ETHERNET SWITCH
TT	1	POWER SURGE PROTECTOR - CONTROL POWER
UU	2	PROGRAMMABLE LOGIC CONTROLLER WITH EXPANSION UNIT
VV	1	PHASE AND UNDER VOLTAGE MONITOR
WW	*	FUSED TERMINAL BLOCKS
XX	2	PUMP PROTECTION MODULE RATED FOR CLASS I, DIVISION I
YY	2	ANALOG SIGNAL ISOLATOR
ZZ	-	NOT USED
AB	-	NOT USED.
AC	1	POWER DISTRIBUTION BLOCK
AD	1	NEUTRAL LUG
AE	1	6" EXHAUST FAN, 120V, STAINLESS FILTERS & GRILL PACKAGE W/BUG GUARD
AF	1	T-STAT FOR EXHAUST FAN

* - AS SCHEDULED

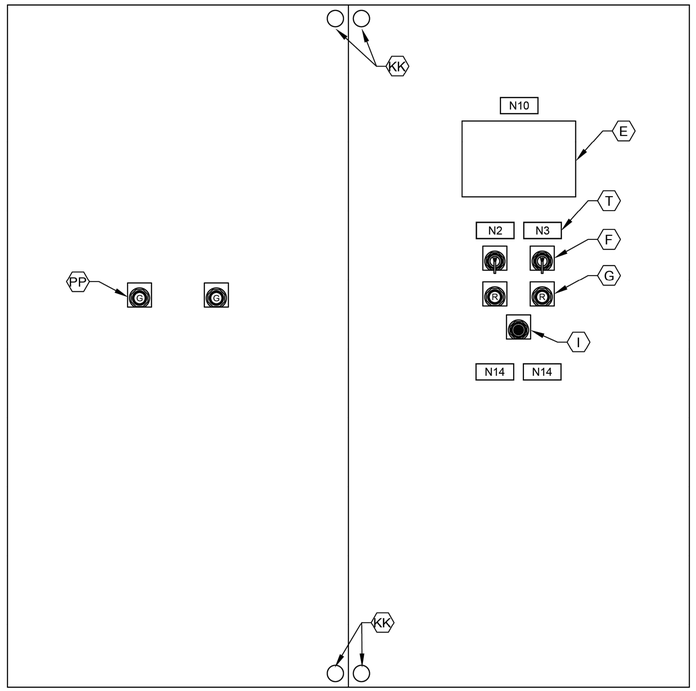

CONTROL PANEL FRONT INNER DOOR

ELEVATION

NTS

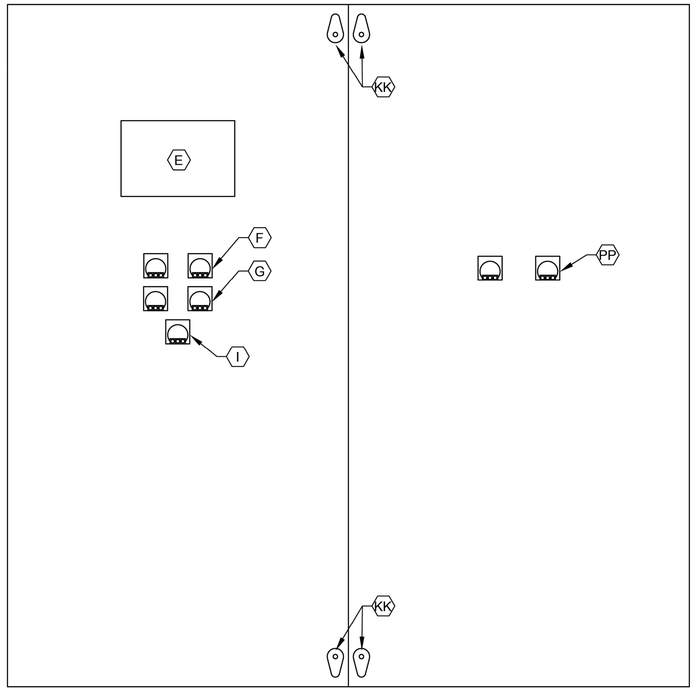

CONTROL PANEL BACK INNER DOOR

ELEVATION

NTS

NOTES:

1. NAMEPLATES SHALL BE MOUNTED TO PANELS USING STAINLESS STEEL HARDWARE.
2. REFER SPECIFICATIONS FOR ALL PANEL COMPONENTS.

GENERAL NOTES:

1. NO ELECTRICAL MATERIAL, APPARATUS, DEVICES, APPLIANCES, FIXTURES, OR EQUIPMENT SHALL BE SOLD OR INSTALLED IN THE CITY UNLESS THEY ARE IN CONFORMANCE WITH THE PROVISIONS OF SECTION 508 CITY OF HOUSTON ELECTRICAL CODE, THE LAWS OF THE STATE OF TEXAS AND ANY APPLICABLE RULES AND REGULATIONS ISSUED UNDER THE AUTHORITY OF THE STATE STATUES. THE MAKER'S NAME, TRADEMARK, OR OTHER IDENTIFICATION SYMBOL SHALL BE PLACED ON ALL ELECTRICAL MATERIALS, APPARATUS, DEVICES, APPLIANCES, FIXTURES, AND EQUIPMENT USED OR INSTALLED UNDER THE PROVISIONS OF THIS CODE. ALL ELECTRICAL MATERIALS AND EQUIPMENT SHALL BE LISTED AND LABELED FOR THE INTENDED USE AND SHALL BE INCLUDED IN A LIST PUBLISHED BY AN APPROVAL AGENCY.

NO.	DATE	REVISION	APP.

FOR INTERIM REVIEW
ONLY NOT INTENDED FOR
PERMIT, BIDDING OR
CONSTRUCTION PURPOSES.
ENGINEER:
HOSS FOROUZAN
P.E. SERIAL NO.77748
12/15/2025

GAI
Gupta & Associates, Inc.
CONSULTING ENGINEERING
Registration No. F-2593
302 Dennis St.,
Houston, Texas 77006
Tel: 713-636-2936
Fax: 713-636-2987
email: hforouzan@gaiconsulting.com

IDS Engineering Group
13430 NW. Freeway
Suite 700
Houston, Tx. 77040
713.462.3178
TxEng Firm 2726
TxSurv Firm 10110700

CITY OF HOUSTON
HOUSTON PUBLIC WORKS

LIFT STATION RENEWAL
AND REPLACEMENT FY 2023

MARKET ST. NO.2 LIFT STA. CONTROL PANEL EQUIP. LAYOUT & SCHEDULE

WBS NUMBER	FOR CITY OF HOUSTON USE ONLY
R-000267-0179-4	
DRAWING SCALE	
HORIZ: VERT:	
CITY OF HOUSTON PM	
NAWARAJ PANTA, P.E.	
DWG. NO. MKT-I-4	SHEET NO. 185 OF 321

IDS JOB No. 0057-085-00

PLOTTED: 12/11/2025 8:16 PM

FILE PATH: O:\H8108_Lift Station Rehabilitation And Reconstruction (IDS)\6 Drawings\Instrumentation And Control\Working\Market St. #2\H8108_MKT-I-05.dwg

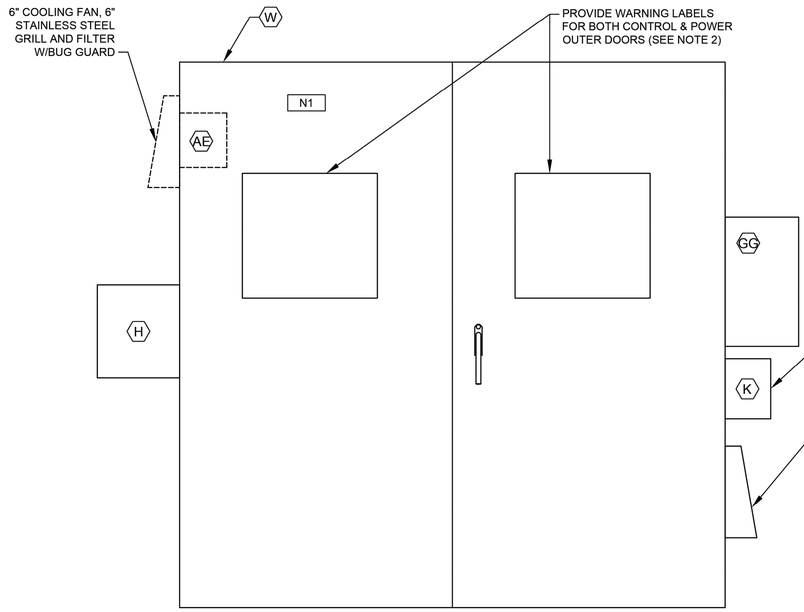

CONTROL CABINET (CONTROL SIDE)
OUTER DOOR

ELEVATION

NTS

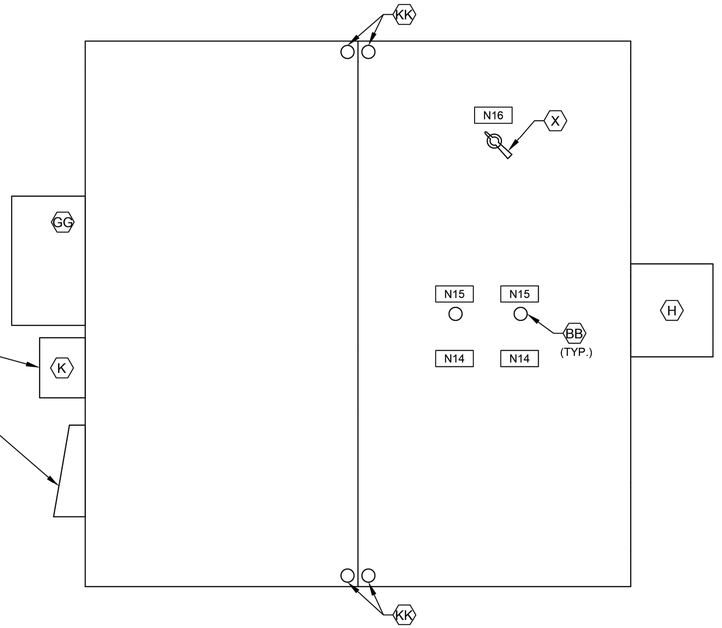

CONTROL CABINET (POWER SIDE)
INNER DOOR

ELEVATION

NTS

(SEE NOTE 1)

NAMEPLATE SCHEDULE

DESIGNATION	ENGRAVED	DESIGNATION	ENGRAVED
N1	PUMP STATION DESIGNATION	N8	NOT USED.
N2	PUMP NO. 1	N9	NOT USED.
N3	PUMP NO. 2	N10	PROGRAMMING SCREEN
N4	NOT USED.	N11	NOT USED.
N5	NOT USED.	N12	PRIMARY PLC
N6	NOT USED.	N13	BACKUP PLC
N7	NOT USED.	N14	MOTOR DATA HORSEPOWER (OUTPUT) ---------- RPM AT FULL LOAD ---------- TIME RATING ---------- FREQUENCY ---------- NUMBER OF PHASES ---------- MODEL NUMBER ---------- RATED VOLTAGE ---------- SERVICE FACTOR ---------- FULL LOAD AMPS ---------- INSULATION CLAS ---------- NEMA DESIGN LETTER ---------- TEMPERATURE RISE ---------- NEMA FRAME SIZE ---------- DATE OF MANUFACTURE ---------- THERMO PROTECTION (IF REQUIRED) -- MOISTURE PROTECTION (IF REQUIRED)-
		N15	EXTERNAL OVERLOAD RESET PUSH BUTTON MECHANISM
		N16	MAIN BREAKER

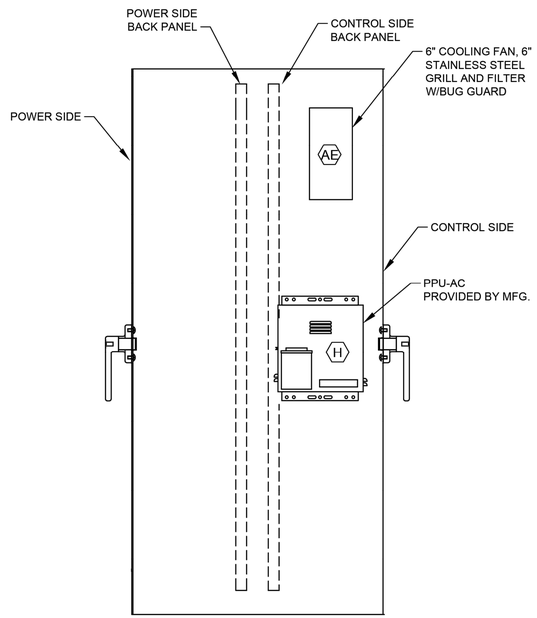

CONTROL CABINET (LEFT SIDE VIEW)

ELEVATION

NTS

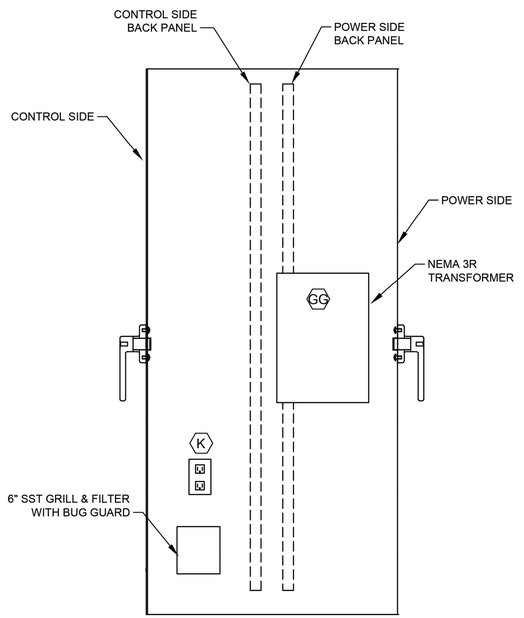

CONTROL CABINET (RIGHT SIDE VIEW)

ELEVATION

NTS

NOTES:

1. SEE SHEET MKT-I-4 FOR EQUIPMENT SCHEDULE.
2. REFER TO NEC SECTIONS 110.16 & 110.21

GENERAL NOTES:

1. NO ELECTRICAL MATERIAL, APPARATUS, DEVICES, APPLIANCES, FIXTURES, OR EQUIPMENT SHALL BE SOLD OR INSTALLED IN THE CITY UNLESS THEY ARE IN CONFORMANCE WITH THE PROVISIONS OF SECTION 508 CITY OF HOUSTON ELECTRICAL CODE, THE LAWS OF THE STATE OF TEXAS AND ANY APPLICABLE RULES AND REGULATIONS ISSUED UNDER THE AUTHORITY OF THE STATE STATUES. THE MAKER'S NAME, TRADEMARK, OR OTHER IDENTIFICATION SYMBOL SHALL BE PLACED ON ALL ELECTRICAL MATERIALS, APPARATUS, DEVICES, APPLIANCES, FIXTURES, AND EQUIPMENT USED OR INSTALLED UNDER THE PROVISIONS OF THIS CODE. ALL ELECTRICAL MATERIALS AND EQUIPMENT SHALL BE LISTED AND LABELED FOR THE INTENDED USE AND SHALL BE INCLUDED IN A LIST PUBLISHED BY AN APPROVAL AGENCY.

NO.	DATE	REVISION	APP.

FOR INTERIM REVIEW
ONLY NOT INTENDED FOR
PERMIT, BIDDING OR
CONSTRUCTION PURPOSES.
ENGINEER:
HOSS FOROUZAN
P.E. SERIAL NO.77748
12/15/2025

GAI
Gupta & Associates, Inc.
CONSULTING ENGINEERING
Registration No. F-2593
302 Dennis St.,
Houston, Texas 77006
Tel: 713-636-2936
Fax: 713-636-2987
email: hforouzan@gaiconsulting.com

IDS Engineering Group
13430 NW. Freeway
Suite 700
Houston, Tx. 77040
713.462.3178
TxEng Firm 2726
TxSurv Firm 10110700

CITY OF HOUSTON
HOUSTON PUBLIC WORKS

LIFT STATION RENEWAL
AND REPLACEMENT FY 2023

MARKET ST. NO.2 LIFT STA.
CONTROL PANEL
EQUIPMENT LAYOUT–I

WBS NUMBER	FOR CITY OF HOUSTON USE ONLY
R-000267-0179-4	
DRAWING SCALE	
HORIZ: VERT:	
CITY OF HOUSTON PM	
NAWARAJ PANTA, P.E.	

DWG. NO.	SHEET NO. 186 OF 321
MKT–I–5	

IDS JOB No. 0057-085-00

PLOTTED: 12/11/2025 8:16 PM

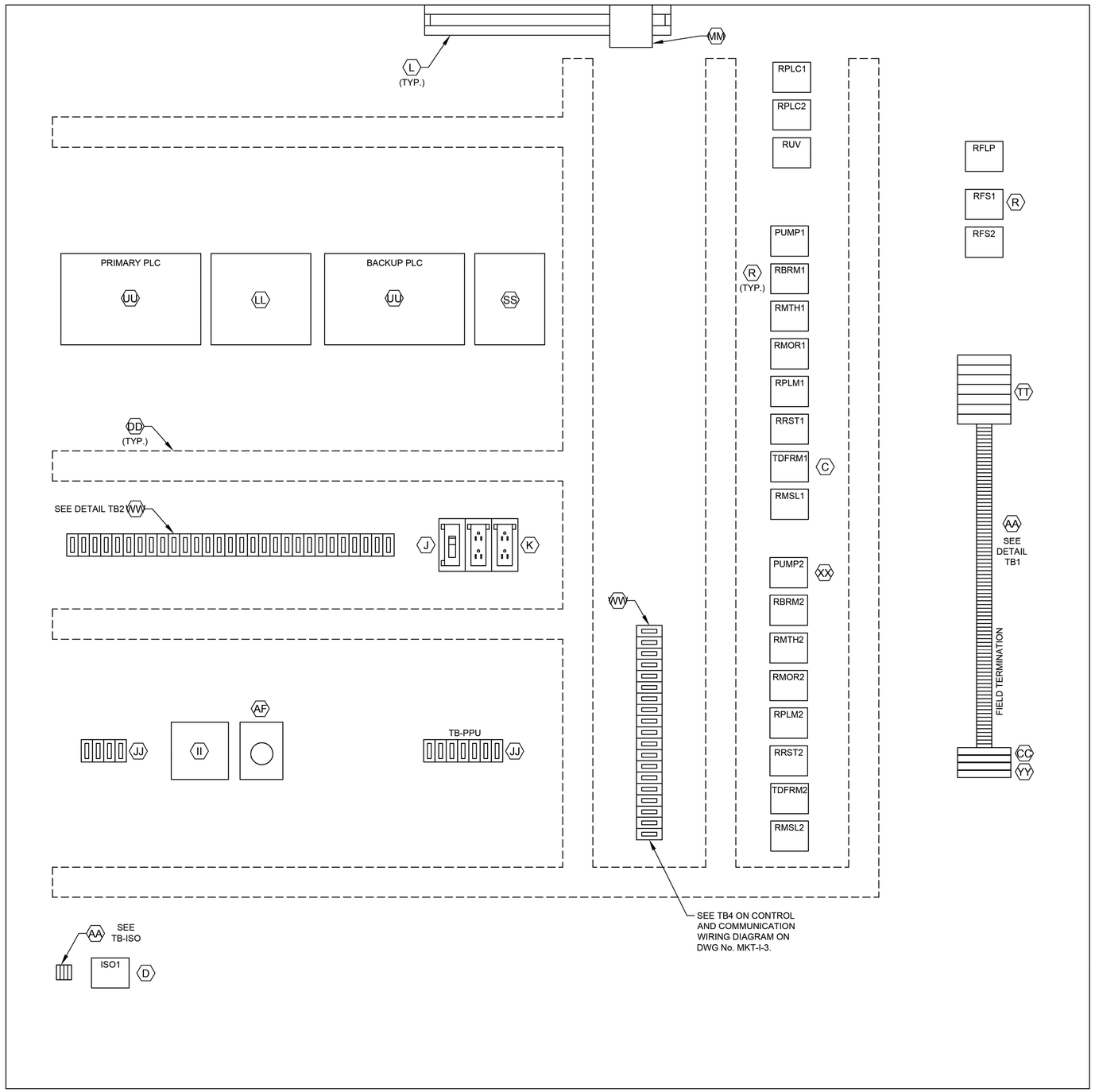

CONTROL PANEL
ELEVATION

L1A
L1N
SPARE
3
3N
49
50
51
52
53
54
1004
1
24V-
24V-
1002
2
11
1001
1001A
12
1003
1003A
1002
1004
18
3N
19
20
36
36N
41
42
43
44
SPARE
L1A
L1N
103
104
105
106
107
108
110
113
115
116
119
SPARE
203
204
205
206
207
208
210
213
215
216
219

DETAIL TB1

ALL L AND N FOR EACH PUMP CONTROL TO BE FUSED

36A
37A
50
52
54
52A
54A
L+
M
35B
38B
41B
47B
13B
13AB
13GB
L+
M
14B
14AB
14GB
L+
M
13
13A
13G
14
14A
14G
SPARE
18
SPARE
28
29
32
35B
33
42
44
SPARE
103
104
115
109
110
118
120
121
122
123
SPARE
209
210
211
218
220
222
223

DETAIL TB2

1500
1501
1503
1504

DETAIL TB-ISO

LEGEND	
TAG	DESCRIPTION
RMTH	MOTOR HIGH TEMPERATURE ALARM RELAY
RPLM	PLC PUMP RUN RELAY
RRST	PUMP RESET AUX RELAY
RPLC	PLC MODE AUX RELAY
RMOR	MOTOR OVERLOAD ALARM RELAY
RBRM	BACKUP SYSTEM RUN RELAY
RUV	UNDER VOLTAGE RELAY
ISO	INTRINSICALLY SAFE RELAY
RFS	PUMP RUN FLOAT SWITCH RELAY
TDFRM	TIMER FLOAT SWITCH RUN RELAY
RMSL	MOTOR SEAL LEAK ALARM RELAY
RFLP	FLOAT LOCKOUT PUMP RELAY

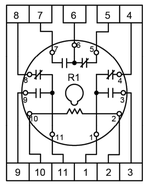

RELAY DETAIL
ITEM R

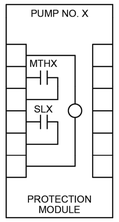

PUMP PROTECTION MODULE
DETAIL, ITEM XX

NOTE: REPLACE "X" WITH APPROPRIATE PUMP NO.

NOTES:

1. SEE SHEET MKT-I-4 FOR EQUIPMENT SCHEDULE.

GENERAL NOTES:

1. NO ELECTRICAL MATERIAL, APPARATUS, DEVICES, APPLIANCES, FIXTURES, OR EQUIPMENT SHALL BE SOLD OR INSTALLED IN THE CITY UNLESS THEY ARE IN CONFORMANCE WITH THE PROVISIONS OF SECTION 508 CITY OF HOUSTON ELECTRICAL CODE, THE LAWS OF THE STATE OF TEXAS AND ANY APPLICABLE RULES AND REGULATIONS ISSUED UNDER THE AUTHORITY OF THE STATE STATUES. THE MAKER'S NAME, TRADEMARK, OR OTHER IDENTIFICATION SYMBOL SHALL BE PLACED ON ALL ELECTRICAL MATERIALS, APPARATUS, DEVICES, APPLIANCES, FIXTURES, AND EQUIPMENT USED OR INSTALLED UNDER THE PROVISIONS OF THIS CODE. ALL ELECTRICAL MATERIALS AND EQUIPMENT SHALL BE LISTED AND LABELED FOR THE INTENDED USE AND SHALL BE INCLUDED IN A LIST PUBLISHED BY AN APPROVAL AGENCY.

NO.	DATE	REVISION	APP.

FOR INTERIM REVIEW
ONLY NOT INTENDED FOR
PERMIT, BIDDING OR
CONSTRUCTION PURPOSES.
ENGINEER:
HOSS FOROUZAN
P.E. SERIAL NO.77748
12/15/2025

GAI
Gupta & Associates, Inc.
CONSULTING ENGINEERING
Registration No. F-2593
302 Dennis St.,
Houston, Texas 77006
Tel: 713-636-2936
Fax: 713-636-2987
email: hforouzan@gaiconsulting.com

IDS Engineering Group
13430 NW. Freeway
Suite 700
Houston, Tx. 77040
713.462.3178
TxEng Firm 2726
TxSurv Firm 10110700

CITY OF HOUSTON
HOUSTON PUBLIC WORKS

LIFT STATION RENEWAL
AND REPLACEMENT FY 2023

MARKET ST. #2 LIFT STA.
CONTROL PANEL
EQUIPMENT LAYOUT—II

WBS NUMBER	FOR CITY OF HOUSTON USE ONLY
R-000267-0179-4	
DRAWING SCALE	
HORIZ: VERT:	
CITY OF HOUSTON PM	
NAWARAJ PANTA, P.E.	
SHEET NO. 187 OF 321	

DWG. NO.
MKT—I—6

FILE PATH: O:\H8108_Lift Station Rehabilitation And Reconstruction (IDS)\6 Drawings\Instrumentation And Control\Working\Market St. #2\H8108_MKT—I—06.dwg

IDS JOB No. 0057-085-00

PLOTTED: 12/11/2025 8:17 PM

FILE PATH: O:\H8108_Lift Station Rehabilitation And Reconstruction (IDS)\6 Drawings\Instrumentation And Control\Working\Market St. #2\H8108_MKT-I-07.dwg

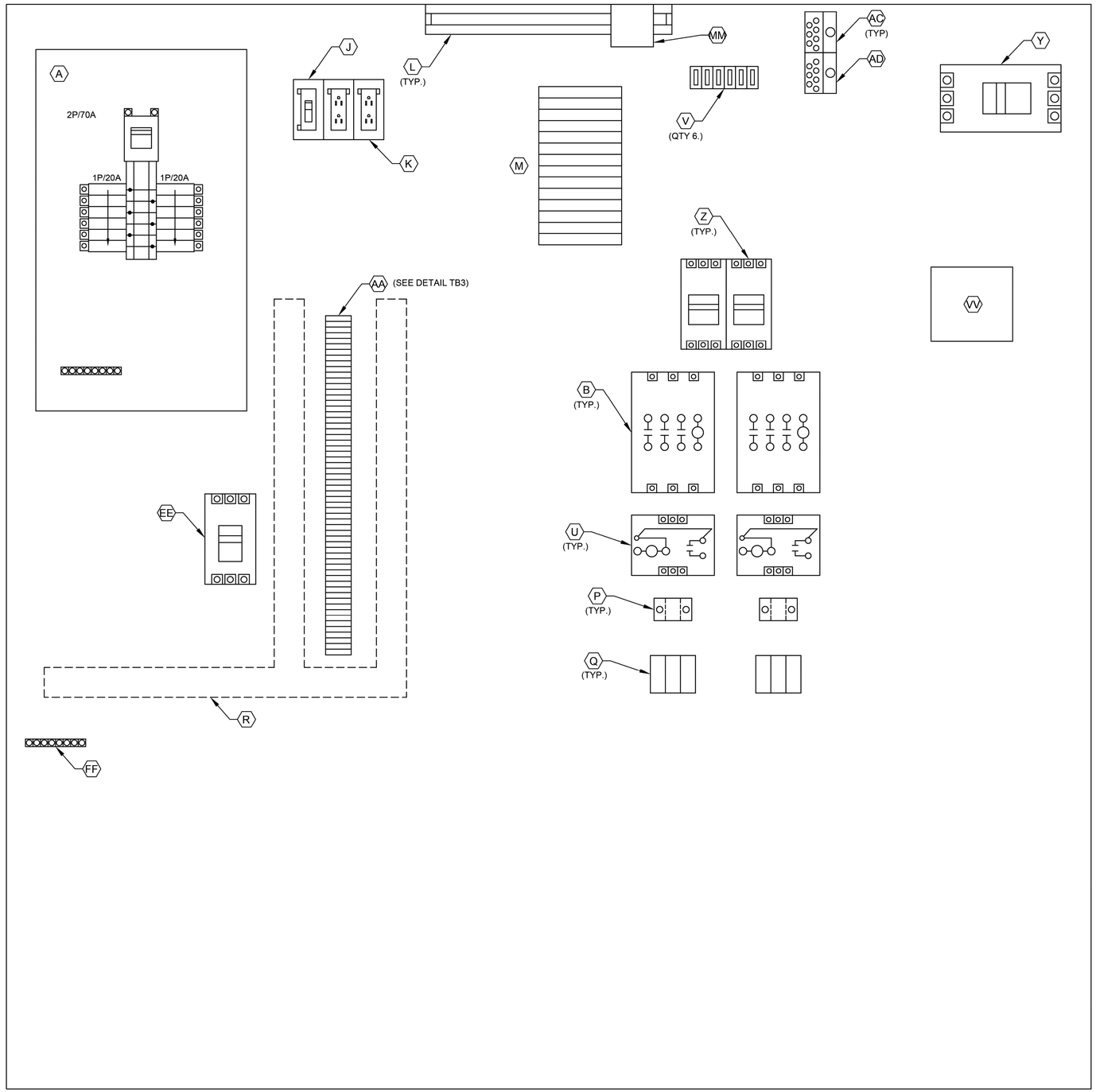

POWER PANEL
ELEVATION

3
18
L1A
L1N
SPARE
SPARE
103
104
105
106
107
108
110
113
115
116
119
SPARE
203
204
205
206
207
208
210
213
215
216
219
SPARE
SPARE
SPARE
SPARE
SPARE
SPARE
SPARE
SPARE
SPARE
SPARE

DETAIL TB3

NOTES:

1. SEE SHEET MKT-I-4 FOR EQUIPMENT SCHEDULE.

GENERAL NOTES:

1. NO ELECTRICAL MATERIAL, APPARATUS, DEVICES, APPLIANCES, FIXTURES, OR EQUIPMENT SHALL BE SOLD OR INSTALLED IN THE CITY UNLESS THEY ARE IN CONFORMANCE WITH THE PROVISIONS OF SECTION 508 CITY OF HOUSTON ELECTRICAL CODE, THE LAWS OF THE STATE OF TEXAS AND ANY APPLICABLE RULES AND REGULATIONS ISSUED UNDER THE AUTHORITY OF THE STATE STATUES. THE MAKER'S NAME, TRADEMARK, OR OTHER IDENTIFICATION SYMBOL SHALL BE PLACED ON ALL ELECTRICAL MATERIALS, APPARATUS, DEVICES, APPLIANCES, FIXTURES, AND EQUIPMENT USED OR INSTALLED UNDER THE PROVISIONS OF THIS CODE. ALL ELECTRICAL MATERIALS AND EQUIPMENT SHALL BE LISTED AND LABELED FOR THE INTENDED USE AND SHALL BE INCLUDED IN A LIST PUBLISHED BY AN APPROVAL AGENCY.

NO.	DATE	REVISION	APP.

FOR INTERIM REVIEW
ONLY NOT INTENDED FOR
PERMIT, BIDDING OR
CONSTRUCTION PURPOSES.
ENGINEER:
HOSS FOROUZAN
P.E. SERIAL NO.77748
12/15/2025

GAI
Gupta & Associates, Inc.
CONSULTING ENGINEERING
Registration No. F-2593
302 Dennis St.,
Houston, Texas 77006
Tel: 713-636-2936
Fax: 713-636-2987
email: hforouzan@gaiconsulting.com

IDS Engineering Group
13430 NW. Freeway
Suite 700
Houston, Tx. 77040
713.462.3178
TxEng Firm 2726
TxSurv Firm 10110700

CITY OF HOUSTON
HOUSTON PUBLIC WORKS

LIFT STATION RENEWAL
AND REPLACEMENT FY 2023

MARKET ST. #2 LIFT STA.
CONTROL PANEL
EQUIPMENT LAYOUT–III

WBS NUMBER	FOR CITY OF HOUSTON USE ONLY
R-000267-0179-4	
DRAWING SCALE	
HORIZ: VERT:	
CITY OF HOUSTON PM	
NAWARAJ PANTA, P.E.	
SHEET NO. 188 OF 321	

DWG. NO.
MKT–I–7

IDS JOB No. 0057-085-00

PLOTTED: 12/11/2025 8:17 PM

FILE PATH: O:\H8108_Lift Station Rehabilitation And Reconstruction (IDS)\6 Drawings\Instrumentation And Control\Working\Market St. #2\H8108_MKT-I-08.dwg

NO.	DATE	REVISION	APP.

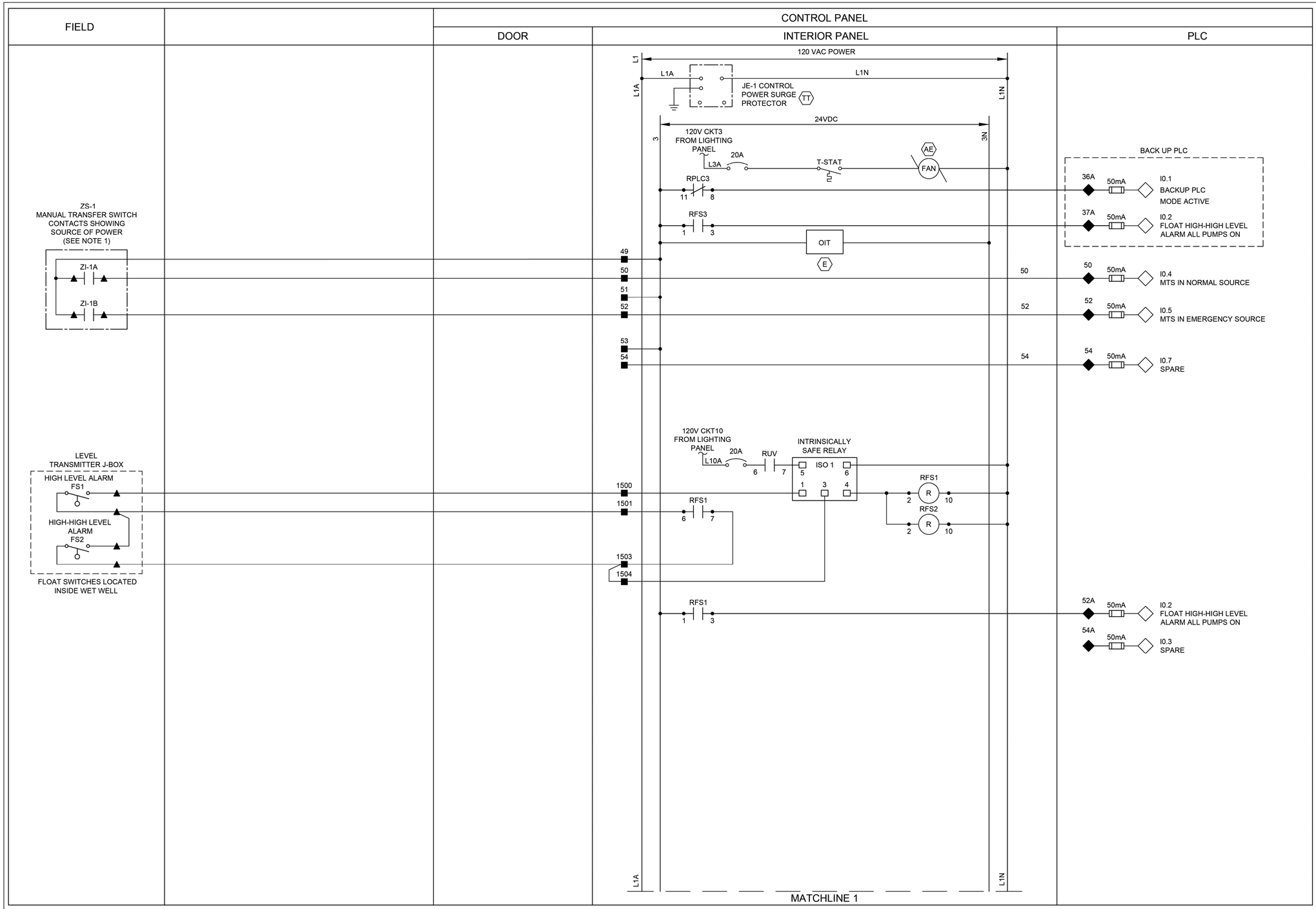

NOTES:

1. PROVIDE MANUAL TRANSFER SWITCH DRY CONTACT.
2. ALL FLOAT CONTROL CIRCUIT WIRES COLOR SHALL BE YELLOW.

GENERAL NOTES:

1. NO ELECTRICAL MATERIAL, APPARATUS, DEVICES, APPLIANCES, FIXTURES, OR EQUIPMENT SHALL BE SOLD OR INSTALLED IN THE CITY UNLESS THEY ARE IN CONFORMANCE WITH THE PROVISIONS OF SECTION 508 CITY OF HOUSTON ELECTRICAL CODE, THE LAWS OF THE STATE OF TEXAS AND ANY APPLICABLE RULES AND REGULATIONS ISSUED UNDER THE AUTHORITY OF THE STATE STATUES. THE MAKER'S NAME, TRADEMARK, OR OTHER IDENTIFICATION SYMBOL SHALL BE PLACED ON ALL ELECTRICAL MATERIALS, APPARATUS, DEVICES, APPLIANCES, FIXTURES, AND EQUIPMENT USED OR INSTALLED UNDER THE PROVISIONS OF THIS CODE. ALL ELECTRICAL MATERIALS AND EQUIPMENT SHALL BE LISTED AND LABELED FOR THE INTENDED USE AND SHALL BE INCLUDED IN A LIST PUBLISHED BY AN APPROVAL AGENCY.

LEGEND

- △ DEVICE OR FIELD TERMINAL LOCATED AT MOTOR
- ✳ DEVICE OR FIELD TERMINAL LOCATED REMOTE
- □ DEVICE OR FIELD TERMINAL LOCATED AT MCC/POWER PANEL
- ■ FIELD TERMINAL LOCATED AT CONTROL PANEL
- ▲ REMOTE TERMINAL
- ● DEVICE TERMINAL NO.
- ◆ PLC INTERFACE TERMINAL

FOR INTERIM REVIEW
ONLY NOT INTENDED FOR
PERMIT, BIDDING OR
CONSTRUCTION PURPOSES.
ENGINEER:
HOSS FOROUZAN
P.E. SERIAL NO.77748
12/15/2025

GAI
Gupta & Associates, Inc.
CONSULTING ENGINEERING
Registration No. F-2593
302 Dennis St.,
Houston, Texas 77006
Tel: 713-636-2936
Fax: 713-636-2987
email: hforouzan@gaiconsulting.com

IDS Engineering Group
13430 NW. Freeway
Suite 700
Houston, Tx. 77040
713.462.3178
TxEng Firm 2726
TxSurv Firm 10110700

CITY OF HOUSTON
HOUSTON PUBLIC WORKS

LIFT STATION RENEWAL
AND REPLACEMENT FY 2023

MARKET ST. NO.2 LIFT STA.
CONTROL PANEL
CONTROL WIRING DIAGRAM-I

WBS NUMBER	FOR CITY OF HOUSTON USE ONLY
R-000267-0179-4	
DRAWING SCALE	
HORIZ: VERT:	
CITY OF HOUSTON PM	
NAWARAJ PANTA, P.E.	
SHEET NO. 189 OF 321	

DWG. NO.
MKT-I-8

IDS JOB No. 0057-085-00

PLOTTED: 12/11/2025 8:17 PM

FILE PATH: O:\H8108_Lift Station Rehabilitation And Reconstruction (IDS)\6 Drawings\Instrumentation And Control\Working\Market St. #2\H8108_MKT-I-09.dwg

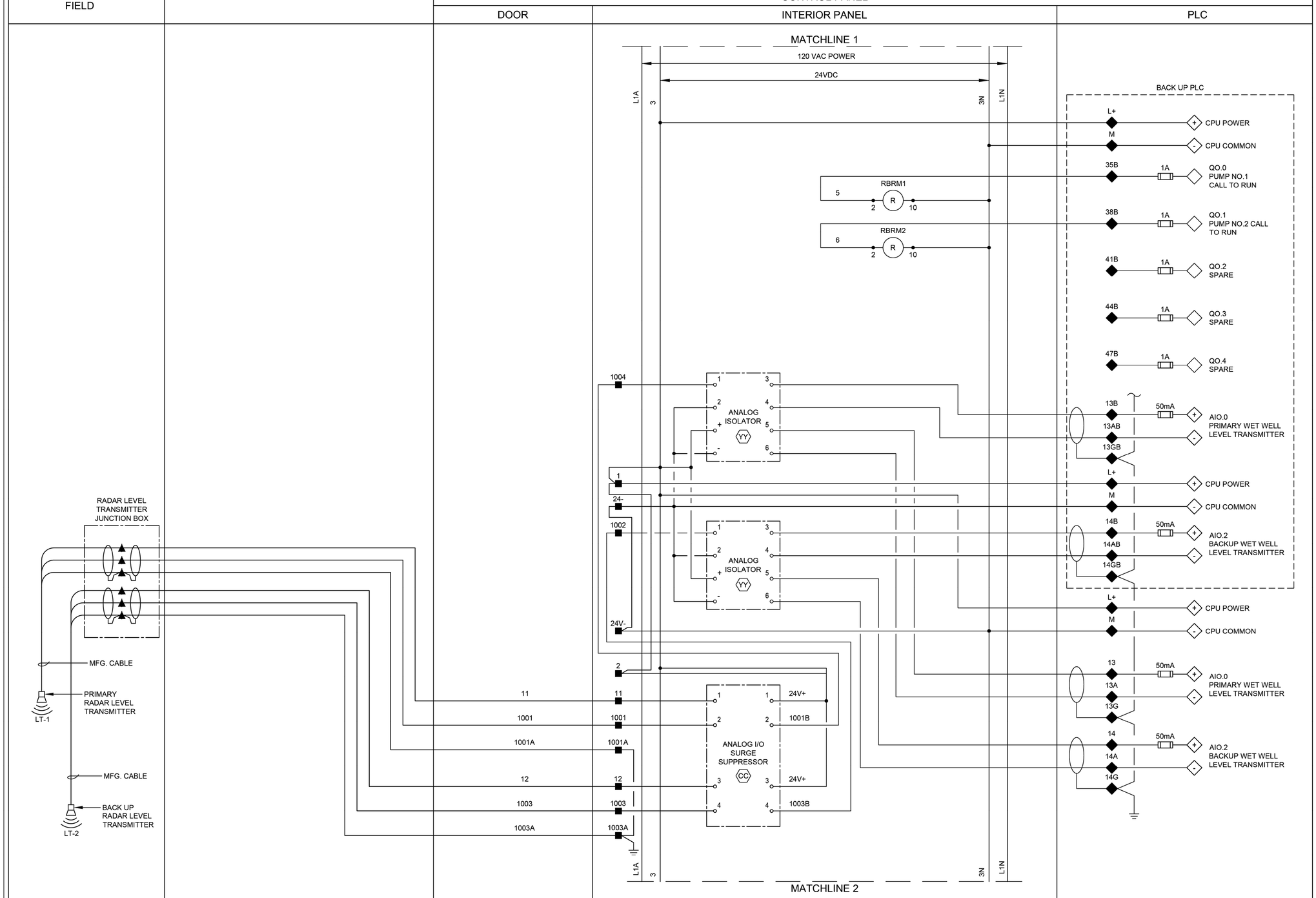

LEGEND

- △ DEVICE OR FIELD TERMINAL LOCATED AT MOTOR
- ✳ DEVICE OR FIELD TERMINAL LOCATED REMOTE
- □ DEVICE OR FIELD TERMINAL LOCATED AT MCC/POWER PANEL
- ■ FIELD TERMINAL LOCATED AT CONTROL PANEL
- ▲ REMOTE TERMINAL
- ● DEVICE TERMINAL NO.
- ◆ PLC INTERFACE TERMINAL

GENERAL NOTES:

1. NO ELECTRICAL MATERIAL, APPARATUS, DEVICES, APPLIANCES, FIXTURES, OR EQUIPMENT SHALL BE SOLD OR INSTALLED IN THE CITY UNLESS THEY ARE IN CONFORMANCE WITH THE PROVISIONS OF SECTION 508 CITY OF HOUSTON ELECTRICAL CODE, THE LAWS OF THE STATE OF TEXAS AND ANY APPLICABLE RULES AND REGULATIONS ISSUED UNDER THE AUTHORITY OF THE STATE STATUES. THE MAKER'S NAME, TRADEMARK, OR OTHER IDENTIFICATION SYMBOL SHALL BE PLACED ON ALL ELECTRICAL MATERIALS, APPARATUS, DEVICES, APPLIANCES, FIXTURES, AND EQUIPMENT USED OR INSTALLED UNDER THE PROVISIONS OF THIS CODE. ALL ELECTRICAL MATERIALS AND EQUIPMENT SHALL BE LISTED AND LABELED FOR THE INTENDED USE AND SHALL BE INCLUDED IN A LIST PUBLISHED BY AN APPROVAL AGENCY.

NO.	DATE	REVISION	APP.

FOR INTERIM REVIEW
ONLY NOT INTENDED FOR
PERMIT, BIDDING OR
CONSTRUCTION PURPOSES.
ENGINEER:
HOSS FOROUZAN
P.E. SERIAL NO.77748
12/15/2025

GAI
Gupta & Associates, Inc.
CONSULTING ENGINEERING
Registration No. F-2593
302 Dennis St.,
Houston, Texas 77006
Tel: 713-636-2936
Fax: 713-636-2987
email: hforouzan@gaiconsulting.com

IDS Engineering Group
13430 NW. Freeway
Suite 700
Houston, Tx. 77040
713.462.3178
TxEng Firm 2726
TxSurv Firm 10110700

CITY OF HOUSTON
HOUSTON PUBLIC WORKS

LIFT STATION RENEWAL AND REPLACEMENT FY 2023

MARKET ST. NO.2 LIFT STA. CONTROL PANEL CONTROL WIRING DIAGRAM—II

WBS NUMBER	FOR CITY OF HOUSTON USE ONLY
R-000267-0179-4	
DRAWING SCALE	
HORIZ: VERT:	
CITY OF HOUSTON PM	
NAWARAJ PANTA, P.E.	
SHEET NO. 190 OF 321	

DWG. NO. MKT—I—9

IDS JOB No. 0057-085-00

PLOTTED: 12/11/2025 8:17 PM

FILE PATH: O:\H8108_Lift Station Rehabilitation And Reconstruction (IDS)\6 Drawings\Instrumentation And Control\Working\Market St. #2\H8108_MKT-I-10.dwg

FIELD	POWER PANEL	CONTROL PANEL		
		DOOR	INTERIOR PANEL	PLC

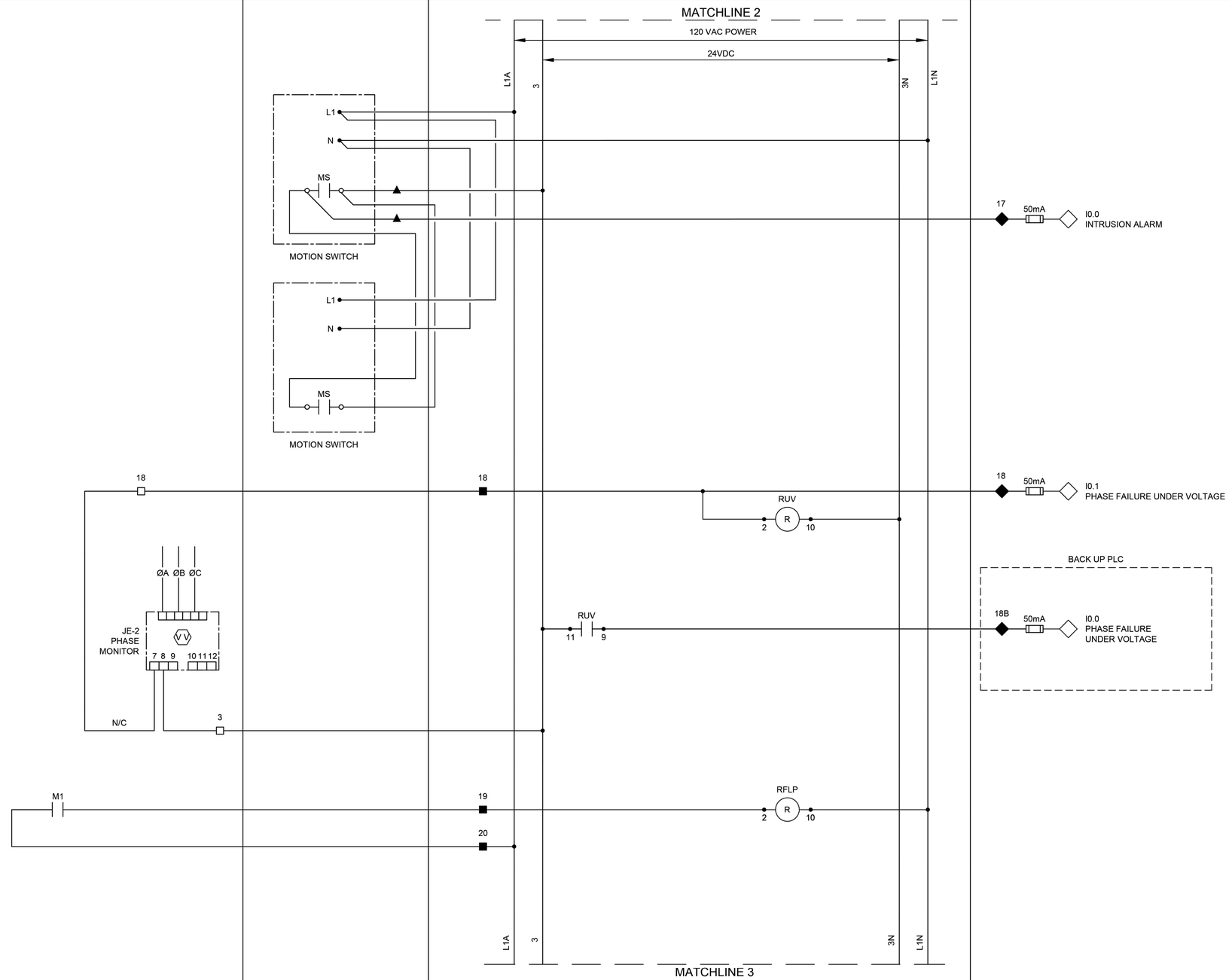

LEGEND

- △ DEVICE OR FIELD TERMINAL LOCATED AT MOTOR
- ✳ DEVICE OR FIELD TERMINAL LOCATED REMOTE
- □ DEVICE OR FIELD TERMINAL LOCATED AT MCC/POWER PANEL
- ■ FIELD TERMINAL LOCATED AT CONTROL PANEL
- ▲ REMOTE TERMINAL
- ● DEVICE TERMINAL NO.
- ◆ PLC INTERFACE TERMINAL

GENERAL NOTES:

1. NO ELECTRICAL MATERIAL, APPARATUS, DEVICES, APPLIANCES, FIXTURES, OR EQUIPMENT SHALL BE SOLD OR INSTALLED IN THE CITY UNLESS THEY ARE IN CONFORMANCE WITH THE PROVISIONS OF SECTION 508 CITY OF HOUSTON ELECTRICAL CODE, THE LAWS OF THE STATE OF TEXAS AND ANY APPLICABLE RULES AND REGULATIONS ISSUED UNDER THE AUTHORITY OF THE STATE STATUES. THE MAKER'S NAME, TRADEMARK, OR OTHER IDENTIFICATION SYMBOL SHALL BE PLACED ON ALL ELECTRICAL MATERIALS, APPARATUS, DEVICES, APPLIANCES, FIXTURES, AND EQUIPMENT USED OR INSTALLED UNDER THE PROVISIONS OF THIS CODE. ALL ELECTRICAL MATERIALS AND EQUIPMENT SHALL BE LISTED AND LABELED FOR THE INTENDED USE AND SHALL BE INCLUDED IN A LIST PUBLISHED BY AN APPROVAL AGENCY.

NO.	DATE	REVISION	APP.

FOR INTERIM REVIEW
ONLY NOT INTENDED FOR
PERMIT, BIDDING OR
CONSTRUCTION PURPOSES.
ENGINEER:
HOSS FOROUZAN
P.E. SERIAL NO.77748
12/15/2025

GAI
Gupta & Associates, Inc.
CONSULTING ENGINEERING
Registration No. F-2593
302 Dennis St.,
Houston, Texas 77006
Tel: 713-636-2936
Fax: 713-636-2987
email: hforouzan@gaiconsulting.com

IDS Engineering Group
13430 NW. Freeway
Suite 700
Houston, Tx. 77040
713.462.3178
TxEng Firm 2726
TxSurv Firm 10110700

CITY OF HOUSTON
HOUSTON PUBLIC WORKS

LIFT STATION RENEWAL AND REPLACEMENT FY 2023

MARKET ST. NO.2 LIFT STATION CONTROL PANEL CONTROL WIRING DIAGRAM—III

WBS NUMBER	FOR CITY OF HOUSTON USE ONLY
R-000267-0179-4	
DRAWING SCALE	
HORIZ: VERT:	
CITY OF HOUSTON PM	
NAWARAJ PANTA, P.E.	

DWG. NO.	SHEET NO.
MKT—I—10	191 OF 321

IDS JOB No. 0057-085-00

PLOTTED: 12/11/2025 8:17 PM

FILE PATH: O:\H8108_Lift Station Rehabilitation And Reconstruction (IDS)\6 Drawings\Instrumentation And Control\Working\Market St. #2\H8108_MKT-I-11.dwg

NO.	DATE	REVISION	APP.

FIELD | POWER PANEL | CONTROL PANEL: DOOR | INTERIOR PANEL | PLC

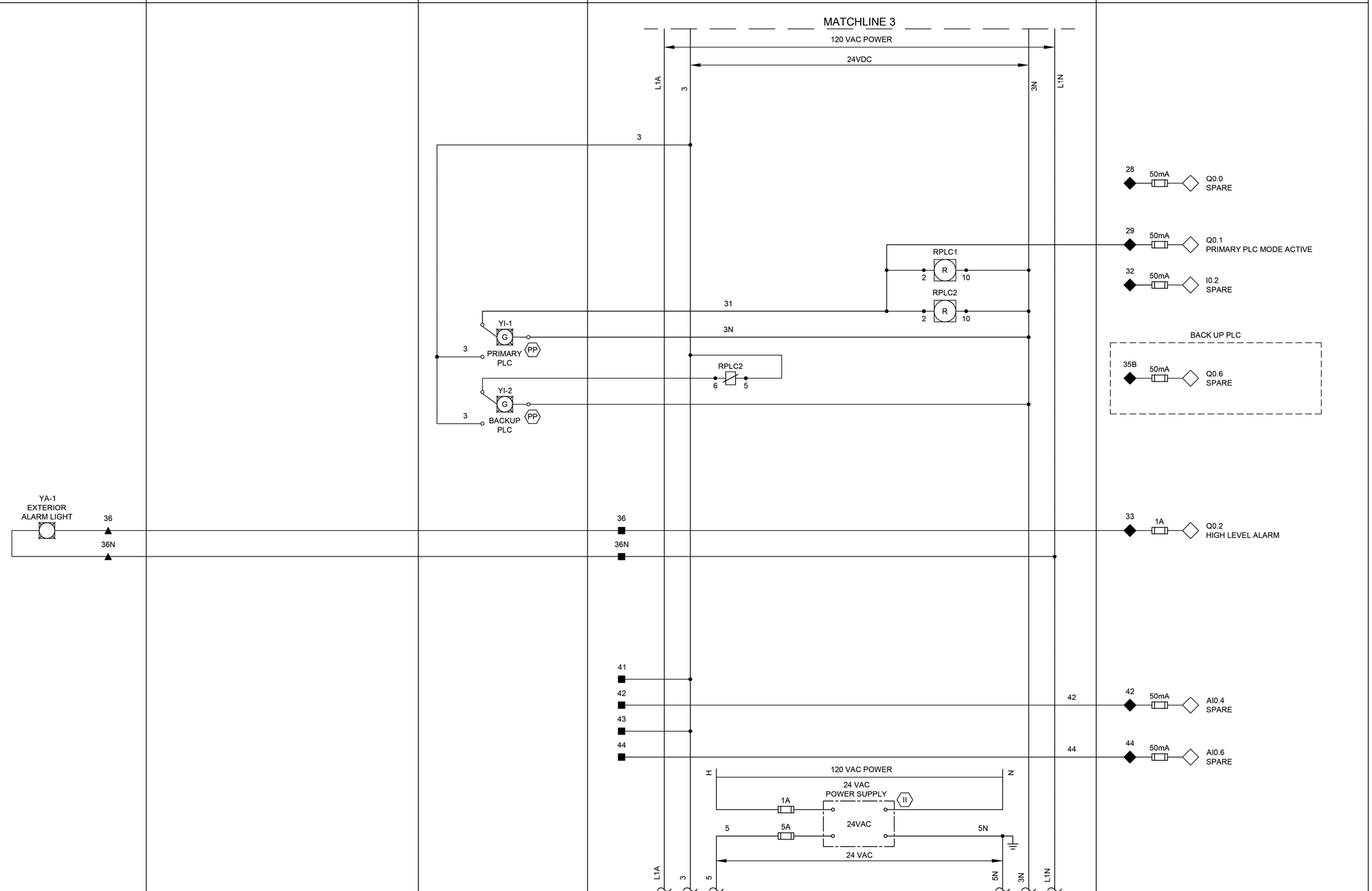

GENERAL NOTES:

1. NO ELECTRICAL MATERIAL, APPARATUS, DEVICES, APPLIANCES, FIXTURES, OR EQUIPMENT SHALL BE SOLD OR INSTALLED IN THE CITY UNLESS THEY ARE IN CONFORMANCE WITH THE PROVISIONS OF SECTION 508 CITY OF HOUSTON ELECTRICAL CODE, THE LAWS OF THE STATE OF TEXAS AND ANY APPLICABLE RULES AND REGULATIONS ISSUED UNDER THE AUTHORITY OF THE STATE STATUES. THE MAKER'S NAME, TRADEMARK, OR OTHER IDENTIFICATION SYMBOL SHALL BE PLACED ON ALL ELECTRICAL MATERIALS, APPARATUS, DEVICES, APPLIANCES, FIXTURES, AND EQUIPMENT USED OR INSTALLED UNDER THE PROVISIONS OF THIS CODE. ALL ELECTRICAL MATERIALS AND EQUIPMENT SHALL BE LISTED AND LABELED FOR THE INTENDED USE AND SHALL BE INCLUDED IN A LIST PUBLISHED BY AN APPROVAL AGENCY.

LEGEND

- △ DEVICE OR FIELD TERMINAL LOCATED AT MOTOR
- ✳ DEVICE OR FIELD TERMINAL LOCATED REMOTE
- □ DEVICE OR FIELD TERMINAL LOCATED AT MCC/POWER PANEL
- ■ FIELD TERMINAL LOCATED AT CONTROL PANEL
- ▲ REMOTE TERMINAL
- ● DEVICE TERMINAL NO.
- ◆ PLC INTERFACE TERMINAL

FOR INTERIM REVIEW
ONLY NOT INTENDED FOR
PERMIT, BIDDING OR
CONSTRUCTION PURPOSES.
ENGINEER:
HOSS FOROUZAN
P.E. SERIAL NO.77748
12/15/2025

GAI
Gupta & Associates, Inc
CONSULTING ENGINEERING
Registration No. F-2593
302 Dennis St.,
Houston, Texas 77006
Tel: 713-636-2936
Fax: 713-636-2987
email: hforouzan@gaiconsulting.com

IDS Engineering Group
13430 NW. Freeway
Suite 700
Houston, Tx. 77040
713.462.3178
TxEng Firm 2726
TxSurv Firm 10110700

CITY OF HOUSTON
HOUSTON PUBLIC WORKS

LIFT STATION RENEWAL
AND REPLACEMENT FY 2023

MARKET ST. NO.2 LIFT STATION CONTROL PANEL CONTROL WIRING DIAGRAM–IV

WBS NUMBER	FOR CITY OF HOUSTON USE ONLY
R-000267-0179-4	
DRAWING SCALE	
HORIZ: VERT:	
CITY OF HOUSTON PM	
NAWARAJ PANTA, P.E.	
DWG. NO. MKT–I–11	SHEET NO. 192 OF 321

IDS JOB No. 0057-085-00

PLOTTED: 12/11/2025 8:17 PM

FILE PATH: O:\H8108_Lift Station Rehabilitation And Reconstruction (IDS)\6 Drawings\Instrumentation And Control\Working\Market St. #2\H8108_MKT-I-12.dwg

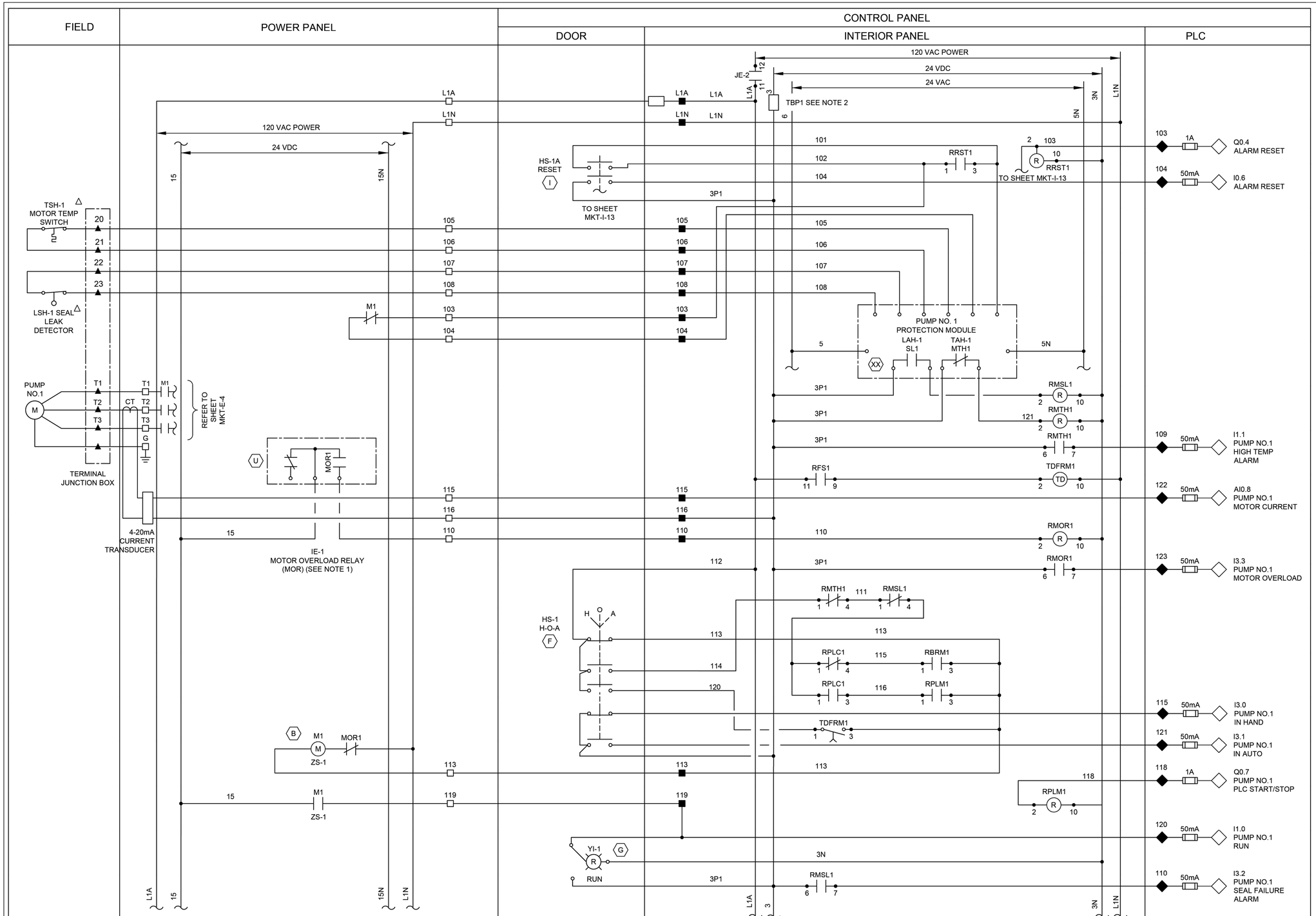

LEGEND

- △ DEVICE OR FIELD TERMINAL LOCATED AT MOTOR
- ✳ DEVICE OR FIELD TERMINAL LOCATED REMOTE
- □ DEVICE OR FIELD TERMINAL LOCATED AT MCC/POWER PANEL
- ■ FIELD TERMINAL LOCATED AT CONTROL PANEL
- ▲ REMOTE TERMINAL
- ● DEVICE TERMINAL NO.
- ◆ PLC INTERFACE TERMINAL

NOTES:

1. MOTOR OVERLOAD RELAY OUTPUT CONTACT SHOWN NORMALLY CLOSED WHEN RELAY IS DE-ENERGIZED, OPEN WHEN ENERGIZED, AND CLOSED WHEN IN ALARM. VERIFY OPERATION OF RELAY PROVIDED AND ADJUST CONNECTION OF RMOR AUXILIARY RELAYS.
2. FUSED TERMINAL ON TERMINAL BLOCK TB4 SEE CONTROL POWER AND COMMUNICATION WIRING DIAGRAM DRAWING NO. MKT-I-3.
3. ALL FLOAT CONTROL CIRCUIT WIRES COLOR SHALL BE YELLOW.

GENERAL NOTES:

1. NO ELECTRICAL MATERIAL, APPARATUS, DEVICES, APPLIANCES, FIXTURES, OR EQUIPMENT SHALL BE SOLD OR INSTALLED IN THE CITY UNLESS THEY ARE IN CONFORMANCE WITH THE PROVISIONS OF SECTION 508 CITY OF HOUSTON ELECTRICAL CODE, THE LAWS OF THE STATE OF TEXAS AND ANY APPLICABLE RULES AND REGULATIONS ISSUED UNDER THE AUTHORITY OF THE STATE STATUES. THE MAKER'S NAME, TRADEMARK, OR OTHER IDENTIFICATION SYMBOL SHALL BE PLACED ON ALL ELECTRICAL MATERIALS, APPARATUS, DEVICES, APPLIANCES, FIXTURES, AND EQUIPMENT USED OR INSTALLED UNDER THE PROVISIONS OF THIS CODE. ALL ELECTRICAL MATERIALS AND EQUIPMENT SHALL BE LISTED AND LABELED FOR THE INTENDED USE AND SHALL BE INCLUDED IN A LIST PUBLISHED BY AN APPROVAL AGENCY.

NO.	DATE	REVISION	APP.

FOR INTERIM REVIEW
ONLY NOT INTENDED FOR
PERMIT, BIDDING OR
CONSTRUCTION PURPOSES.
ENGINEER:
HOSS FOROUZAN
P.E. SERIAL NO.77748
12/15/2025

GAI
Gupta & Associates, Inc
CONSULTING ENGINEERING
Registration No. F-2593
302 Dennis St.,
Houston, Texas 77006
Tel: 713-636-2936
Fax: 713-636-2987
email: hforouzan@gaiconsulting.com

IDS Engineering Group
13430 NW. Freeway
Suite 700
Houston, Tx. 77040
713.462.3178
TxEng Firm 2726
TxSurv Firm 10110700

CITY OF HOUSTON
HOUSTON PUBLIC WORKS

LIFT STATION RENEWAL
AND REPLACEMENT FY 2023

MARKET ST. NO.2 LIFT STATION PUMP NO.1 CONTROL WIRING DIAGRAM

WBS NUMBER	FOR CITY OF HOUSTON USE ONLY
R-000267-0179-4	
DRAWING SCALE	
HORIZ: VERT:	
CITY OF HOUSTON PM	
NAWARAJ PANTA, P.E.	
DWG. NO. MKT-I-12	SHEET NO. 193 OF 321

IDS JOB No. 0057-085-00

PLOTTED: 12/11/2025 8:17 PM

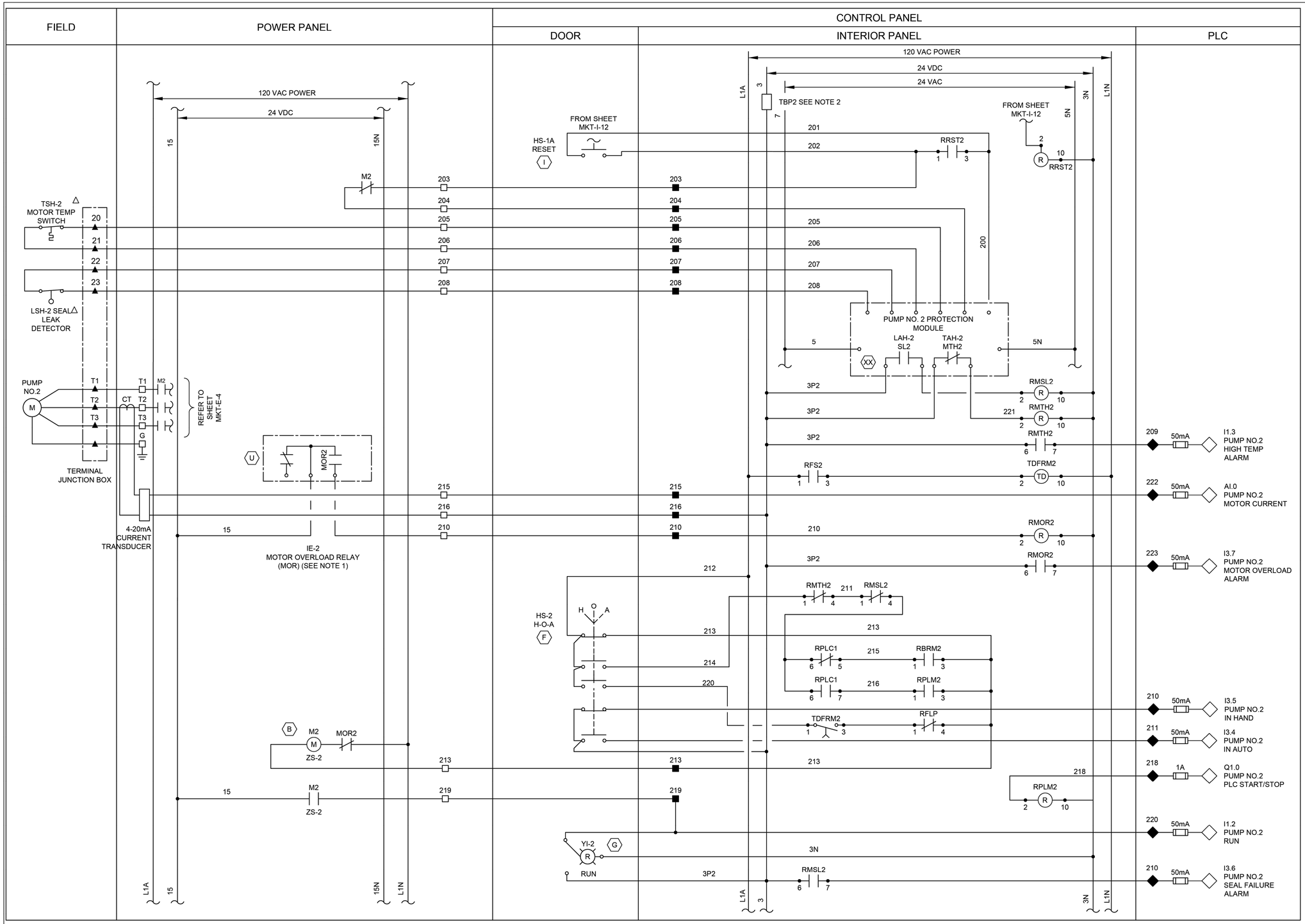

LEGEND

- △ DEVICE OR FIELD TERMINAL LOCATED AT MOTOR
- ✳ DEVICE OR FIELD TERMINAL LOCATED REMOTE
- □ DEVICE OR FIELD TERMINAL LOCATED AT MCC/POWER PANEL
- ■ FIELD TERMINAL LOCATED AT CONTROL PANEL
- ▲ REMOTE TERMINAL
- ● DEVICE TERMINAL NO.
- ◆ PLC INTERFACE TERMINAL

NOTES:

1. MOTOR OVERLOAD RELAY OUTPUT CONTACT SHOWN NORMALLY CLOSED WHEN RELAY IS DE-ENERGIZED, OPEN WHEN ENERGIZED, AND CLOSED WHEN IN ALARM. VERIFY OPERATION OF RELAY PROVIDED AND ADJUST CONNECTION OF RMOR AUXILIARY RELAYS.
2. FUSED TERMINAL ON TERMINAL BLOCK TB4 SEE CONTROL POWER AND COMMUNICATION WIRING DIAGRAM DRAWING NO. MKT-I-3.
3. ALL FLOAT CONTROL CIRCUIT WIRES COLOR SHALL BE YELLOW.

GENERAL NOTES:

1. NO ELECTRICAL MATERIAL, APPARATUS, DEVICES, APPLIANCES, FIXTURES, OR EQUIPMENT SHALL BE SOLD OR INSTALLED IN THE CITY UNLESS THEY ARE IN CONFORMANCE WITH THE PROVISIONS OF SECTION 508 CITY OF HOUSTON ELECTRICAL CODE, THE LAWS OF THE STATE OF TEXAS AND ANY APPLICABLE RULES AND REGULATIONS ISSUED UNDER THE AUTHORITY OF THE STATE STATUES. THE MAKER'S NAME, TRADEMARK, OR OTHER IDENTIFICATION SYMBOL SHALL BE PLACED ON ALL ELECTRICAL MATERIALS, APPARATUS, DEVICES, APPLIANCES, FIXTURES, AND EQUIPMENT USED OR INSTALLED UNDER THE PROVISIONS OF THIS CODE. ALL ELECTRICAL MATERIALS AND EQUIPMENT SHALL BE LISTED AND LABELED FOR THE INTENDED USE AND SHALL BE INCLUDED IN A LIST PUBLISHED BY AN APPROVAL AGENCY.

NO.	DATE	REVISION	APP.

FOR INTERIM REVIEW
ONLY NOT INTENDED FOR
PERMIT, BIDDING OR
CONSTRUCTION PURPOSES.
ENGINEER:
HOSS FOROUZAN
P.E. SERIAL NO.77748
12/15/2025

GAI
Gupta & Associates, Inc.
CONSULTING ENGINEERING
Registration No. F-2593
302 Dennis St.,
Houston, Texas 77006
Tel: 713-636-2936
Fax: 713-636-2987
email: hforouzan@gaiconsulting.com

IDS Engineering Group
13430 NW. Freeway
Suite 700
Houston, Tx. 77040
713.462.3178
TxEng Firm 2726
TxSurv Firm 10110700

CITY OF HOUSTON
HOUSTON PUBLIC WORKS

LIFT STATION RENEWAL AND REPLACEMENT FY 2023

MARKET ST. NO.2 LIFT STATION PUMP NO.2 CONTROL WIRING DIAGRAM

WBS NUMBER	FOR CITY OF HOUSTON USE ONLY
R-000267-0179-4	
DRAWING SCALE	
HORIZ: VERT:	
CITY OF HOUSTON PM	
NAWARAJ PANTA, P.E.	
SHEET NO. 194 OF 321	

DWG. NO. MKT-I-13

IDS JOB No. 0057-085-00

FILE PATH: O:\H8108_Lift Station Rehabilitation And Reconstruction (IDS)\6 Drawings\Instrumentation And Control\Working\Market St. #2\H8108_MKT-I-13.dwg

PLOTTED: 12/17/2025 10:15 AM

FILE PATH: \\idseg.com\FS\Projects\0000\005708500 CoH Lift Stations - FY 2023\CAD\DWG\PRODUCTION\195-MUD No. 67 SITE PLAN AND DEMO.dwg

LEGEND

- EXISTING CONCRETE PAVEMENT
- REMOVE EXISTING CONCRETE PAVEMENT
- SITE DEMOLITION
- EXISTING CONCRETE SIDEWALK
- REMOVE EXISTING CONCRETE SIDEWALK
- ABANDON ANY UNDERGROUND UTILITY
- REMOVE ANY UNDERGROUND UTILITY
- REMOVE EXISTING FENCE
- FILTER FABRIC FENCE
- PROP. CLEARING AND GRUBBING
- ROCK FILTER DAM

NOTES:

1. EXISTING LIFT STATION WET WELL TO REMAIN.
2. SEE ELECTRICAL PLANS ON SHEETS MUD-E-01-MUD-I-13 FOR ELECTRICAL IMPROVEMENTS.
3. CONTRACTOR SHALL COORDINATE WITH CENTERPOINT ENERGY TO DE-ENERGIZE THE LIFT STATION AND OTHER ELECTRICAL EQUIPMENT ON SITE.
4. CONTRACTOR SHALL PROTECT THE EXISTING CONDUIT AND CABLE. IF CABLE OR CONDUIT IS DAMAGED CONTRACTOR SHALL REPLACE AT NO ADDITIONAL COST TO THE CITY.
5. REMOVE THE EXISTING FORCE MAIN TO THE NEAREST PIPE JOINT AND TIE PROP FORCE MAIN TO EXIST. USE RESTRAINED JOINTS.
6. THE EXISTING FORCE MAIN IS ASSUMED TO BE DUCTILE IRON BELL AND SPIGOT AND SHALL BE FIELD VERIFIED BY THE CONTRACTOR.
7. CONTRACTOR SHALL NOT STORE MATERIAL, EQUIPMENT, OR PERFORM ANY WORK WITHIN THE EXISTING CENTERPOINT ENERGY AND GAS PIPELINE CORRIDOR.

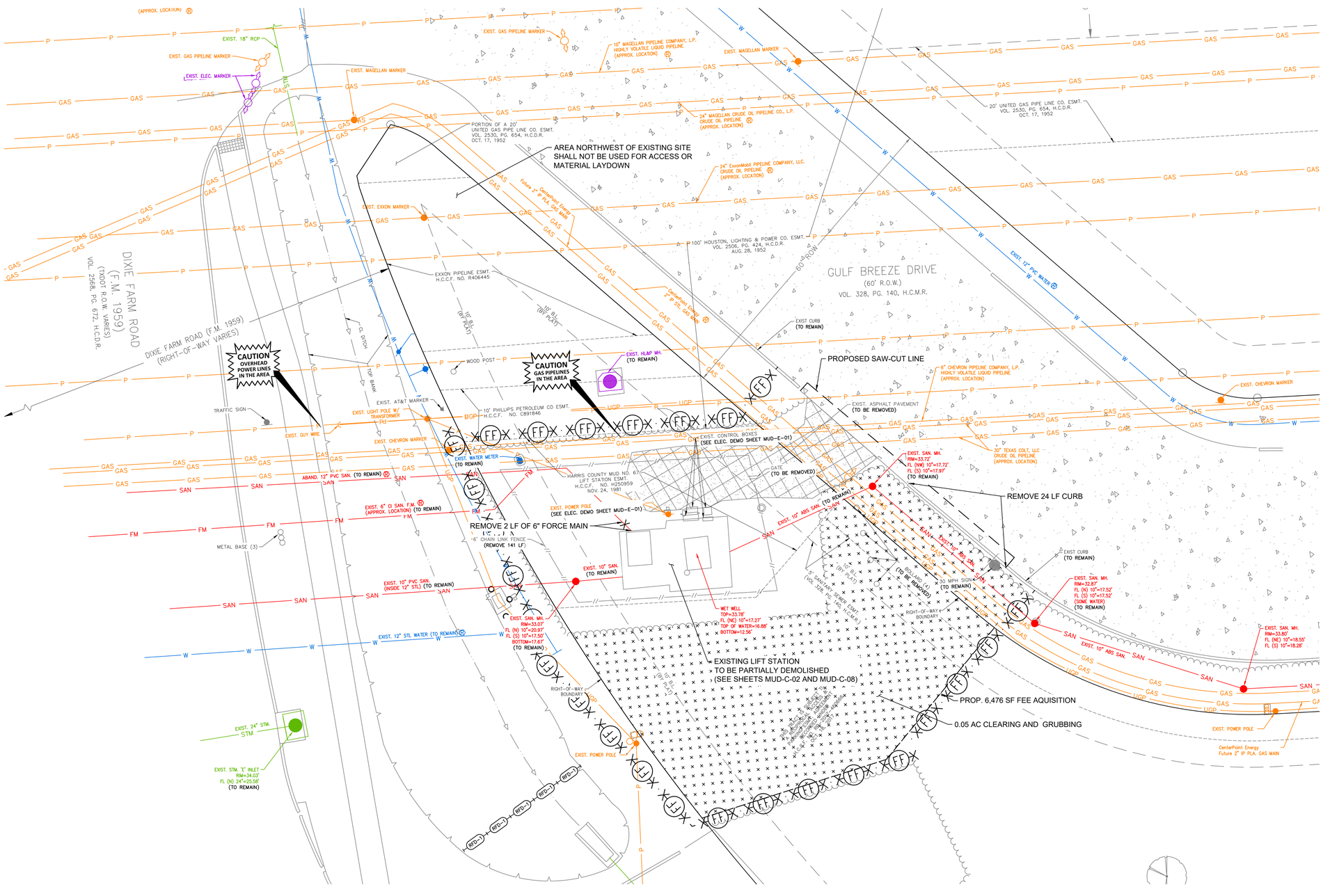

BENCHMARK:

FLOODPLAIN REFERENCE MARK NUMBER 010433 IS A BRASS DISC IN CONCRETE STAMPED A119 BM02 LOCATED ON SOUTH SIDEWALK ON DIXIE FARM ROAD BRIDGE APPROXIMATELY 0.21 MILES SOUTHWEST FROM THE INTERSECTION OF IH 45 IN KEYMAP 617E IN THE CLEAR CREEK WATERSHED.

ELEV. 29.92 FEET NAVD 1988, 2001 ADJUSTMENT

FLOODPLAIN NOTE:

FLOODPLAIN REFERENCE MARK NUMBER 010433 IS A BRASS DISC IN CONCRETE STAMPED A119 BM02 LOCATED ON DIXIE FARM ROAD AT TURKEY CREEK ON THE DOWNSTREAM SIDE OF THE BRIDGE.

ELEV. 29.92 FEET NAVD 1988, 2001 ADJUSTMENT
100-YR ELEV. 30.40'
500-YR ELEV. 31.50'
FIRM PANEL: 48201C1060M

EXISTING UTILITY NOTE:

EXISTING UNDERGROUND UTILITY INFORMATION (TYPE, SIZE & OWNERSHIP) ARE SHOWN APPROXIMATELY BASED ON THE AVAILABLE RECORD DRAWINGS AND FIELD VERIFICATION (WHERE FEASIBLE) WITHOUT PROBING AND EXCAVATION. NO WARRANTY IS MADE AS TO THE ACCURACY OR COMPLETENESS OF UTILITY LOCATION SHOWN ON THE DRAWING. CAUTION SHOULD BE EXERCISED WHEN EXCAVATING OR BORE AND JACKING IN THE VICINITY OF UNDERGROUND UTILITIES. OWNERS OF THE UTILITIES SHOULD BE NOTIFIED PRIOR TO SUCH ACTIVITIES. CALL UTILITY COORDINATING COMMITTEE AT 713-223-4567, AT LEAST 48 HOURS PRIOR TO EXCAVATING IN THE STREET RIGHT-OF-WAY.

NO.	DATE	REVISION	APP.

NOTICE:

FOR YOUR SAFETY, YOU ARE REQUIRED BY TEXAS LAW TO CALL 811 AT LEAST 48 HOURS BEFORE YOU DIG SO THAT UNDERGROUND LINES CAN BE MARKED. THIS SIGNATURE DOES NOT FULFILL YOUR OBLIGATION TO CALL 811

VERIFICATION OF PRIVATE UTILITY LINES

Date

CenterPoint Energy natural gas utilities shown. (Gas service lines are not shown). This signature not be used for conflict verification.

Signature valid for six months.

Date

CenterPoint Energy/UNDERGROUND Electrical Facilities Verification ONLY. (This signature verifies existing underground facilities - not to be used for conflict verification)

Signature valid for six months.

Date

Approved for AT&T underground conduit facilities only. Signature valid for one year.

IDS Engineering Group
13430 NW. Freeway, Suite 700
Houston, Tx. 77040
713.462.3178
TxEng Firm 2726 | TxSurv Firm 10110700

SURVEYED BY: KUO & ASSOCIATES, INC.
TBPE FIRM #F-4578; TBPLS FIRM #1007560

THIS DOCUMENT IS RELEASED FOR THE PURPOSE OF REVIEW UNDER THE AUTHORITY OF MARCEL KHOUW, P.E. 101807 ON 12/17/2025. IT IS NOT TO BE USED FOR CONSTRUCTION PURPOSES.

CITY OF HOUSTON

HOUSTON PUBLIC WORKS

LIFT STATION RENEWAL AND REPLACEMENT FY 2023

MUD NO. 67 LIFT STATION SITE DEMOLITION PLAN AND SWPPP

WBS NUMBER	FOR CITY OF HOUSTON USE ONLY
R-000267-0179-4	
DRAWING SCALE	
HORIZ: 1" = 10' VERT: N/A	
CITY OF HOUSTON PM	
NAWARAJ PANTA, P.E.	

DWG. NO.	SHEET NO. 195 OF 321
MUD-C-01	

PLOTTED: 12/17/2025 8:25 AM

LIFT STATION DEMOLITION AND ABANDONMENT NOTES:

1. THIS DRAWING IS A REPRODUCTION OF THE EXISTING LIFT STATION CONSTRUCTION DRAWINGS AND INTENDED TO PROVIDE GENERAL INFORMATION FOR STATION DEMOLITION. THE CONTRACTOR IS RESPONSIBLE FOR DETERMINING THE ACTUAL WORK REQUIRED FOR DEMOLITION AND REMOVAL OF STRUCTURAL, MECHANICAL, AND ELECTRICAL COMPONENTS. A CLAIM FOR CHANGED CONDITIONS BETWEEN THE EXISTING CONDITIONS AND THE RECORD DRAWINGS WILL NOT BE CONSIDERED.
2. NO DEMOLITION IS TO BE PERFORMED UNTIL BYPASS PUMPING HAS BEEN INSTALLED AND OPERATIONAL.
3. THE CITY OF HOUSTON WILL RETAIN SALVAGE RIGHTS TO ALL MATERIAL AND EQUIPMENT. ALL MATERIALS AND EQUIPMENT RETAINED BY THE CITY OF HOUSTON SHALL BE DELIVERED TO A POINT DESIGNATED BY CITY OF HOUSTON REPRESENTATIVE (MR. ARTURO CARRILLO 832-395-3558). ANY MATERIAL OR EQUIPMENT NOT RETAINED BY THE CITY OF HOUSTON SHALL BE REMOVED FROM THE SITE AND DISPOSED OF BY THE CONTRACTOR IN ACCORDANCE WITH APPLICABLE REGULATIONS.
4. WHEN REMOVING EXISTING PUMPS, CONTRACTOR SHALL LEAVE AS MUCH WIRE/CABLE AS POSSIBLE IN ORDER FOR THE CITY TO REUSE THE PUMPS.
5. CONTRACTOR SHALL NOTIFY TEXAS DEPARTMENT OF HEALTH (DEPARTMENT) ON A FORM SPECIFIED BY THE DEPARTMENT OF ANY ASBESTOS ABATEMENT ACTIVITY, RENOVATION OR OPERATIONS AND MAINTENANCE ACTIVITY AFFECTING ASBESTOS-CONTAINING BUILDING MATERIALS, OR ANY DEMOLITION IN FACILITIES OR PUBLIC BUILDINGS.
6. CONCRETE SLAB AND WALLS INDICATED ON THIS PLAN SHALL BE REMOVED TO 5 FEET BELOW FINISHED GRADE AS PER SPECIFICATION SECTION 02220.
7. ALL REMAINING WALL OPENINGS IN THE VALVE VAULT SHALL BE SEALED WITH NON-SHRINK GROUT.
8. CONTRACTOR SHALL BACKFILL THE ABANDONED AND DEMOLISHED VALVE VAULT. BACKFILL SHALL BE FLOWABLE FILL AND COMPACTED PROPERLY UP TO THE PROPOSED CONCRETE DISCHARGE ASSEMBLY PAD.
9. THE CONTRACTOR SHALL COORDINATE WITH CENTERPOINT ENERGY TO TEMPORARILY DISCONNECT ELECTRICAL POWER AS NEEDED.
10. THE EXISTING WET WELL SHALL BE CLEANED OF ALL DEBRIS, WASTEWATER AND OTHER RESIDUES BY AN APPROVED CITY OF HOUSTON DISPOSAL CONTRACTOR.
11. THE CONTRACTOR SHALL DISPOSE OF ANY LIQUID OR SOLID WASTE FOUND IN THE WET WELL AT A DISPOSAL FACILITY LICENSED AND APPROVED BY THE STATE OF TEXAS. THE CONTRACTOR SHALL BE RESPONSIBLE FOR THE COST OF TRANSPORTATION, DISPOSAL AND TESTING REQUIRED BY STATE AND FEDERAL REGULATORY AGENCIES, AND BY THE DISPOSAL FACILITY.
12. PRIOR TO THE CLEAN-OUT AND CLEANING OF THE EXISTING LIFT STATION WET WELL, CONTRACTOR TO SUBMIT PROOF TO C.O.H. CONSTRUCTION PM THAT TRANSPORTER/HAULER TO BE USED FOR THE TRANSPORT OF THE CONTENTS OF THE WET WELL (I.E., SOLIDS, GRIT, SEWAGE SLUDGE, AND DOMESTIC SLUDGE, ETC.) IS REGISTERED BY THE TEXAS COMMISSION ON ENVIRONMENTAL QUALITY (TCEQ) AS A SLUDGE TRANSPORTER AND THE TRANSPORTER'S REGISTRATION IS CURRENT AND VALID DURING THE PERIOD OF PERFORMANCE.
13. CONTRACTOR SHALL SUBMIT PROOF OF SUBMISSION OF REQUIRED ASBESTOS/DEMOLITION NOTIFICATION FORM TO THE TEXAS DEPARTMENT OF STATE HEALTH SERVICES TO C.O.H. CONSTRUCTION PM. THE NOTIFICATION TO THE STATE MUST BE PROVIDED A MINIMUM OF 10 DAYS PRIOR TO THE STARTUP OF ANY DEMOLITION ACTIVITIES AT THE SITE.
14. CONTRACTOR SHALL OBTAIN CITY OF HOUSTON DEMOLITION PERMIT (SEE FORM CE 1075 REV. 01/01/2015 FOR GUIDELINES) OR SUBMIT PROOF OF NON-APPLICABILITY TO C.O.H. CONSTRUCTION PROJECT MANAGER PRIOR TO THE STARTUP OF DEMOLITION ACTIVITIES AT THE SITE. THE CONTRACTOR SHALL OBTAIN ANY STATE DEMOLITION PERMITS REQUIRED.

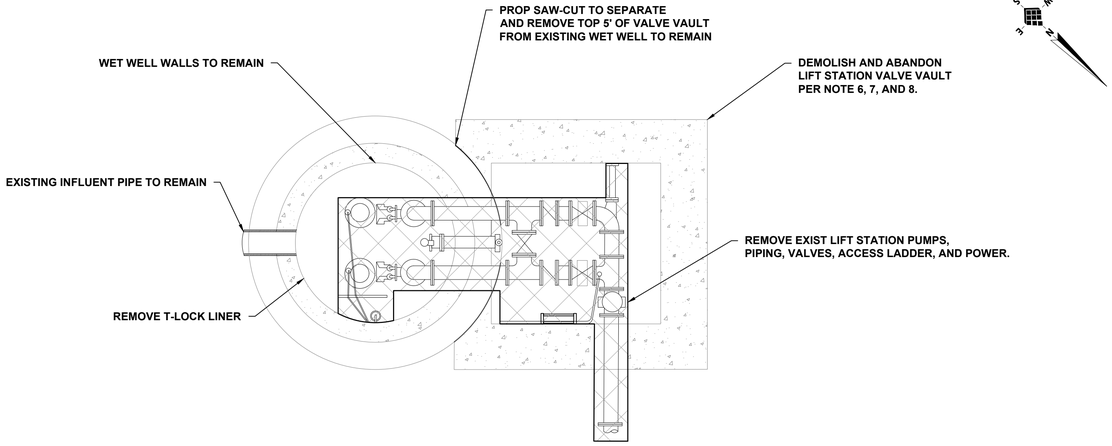

LIFT STATION PLAN

N.T.S.

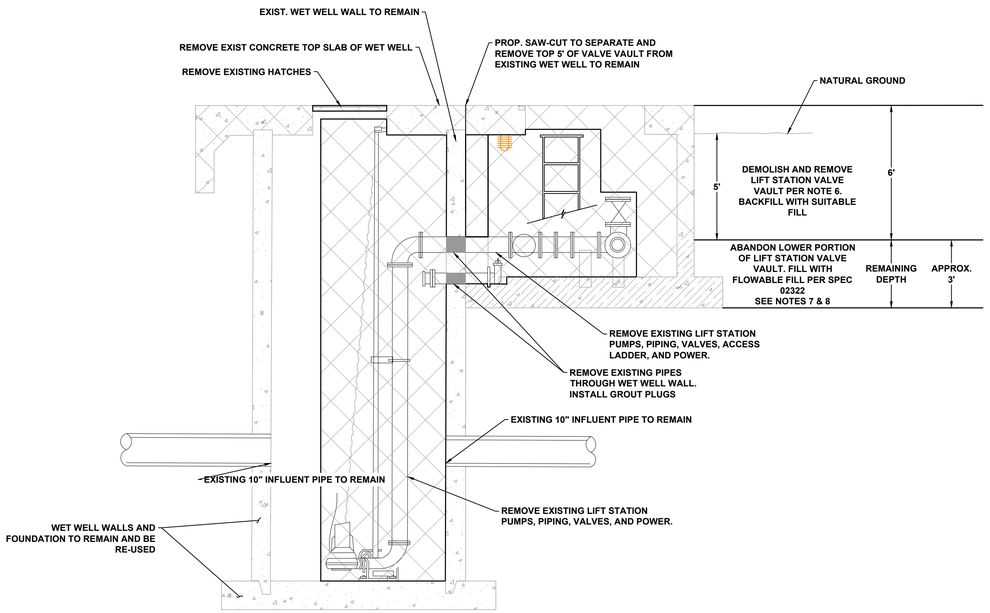

LIFT STATION SECTION

N.T.S.

NO.	DATE	REVISION	APP.

LEGEND

DEMOLITION AREA

ABANDON VALVE VAULT

IDS Engineering Group
13430 NW. Freeway, Suite 700
Houston, Tx. 77040
713.462.3178
TxEng Firm 2726 | TxSurv Firm 10110700

SURVEYED BY: KUO & ASSOCIATES, INC.
TBPE FIRM #F-4578; TBPLS FIRM #1007560

THIS DOCUMENT IS RELEASED FOR THE PURPOSE OF REVIEW UNDER THE AUTHORITY OF MARCEL KHOUW, P.E. 101807 ON 12/17/2025. IT IS NOT TO BE USED FOR CONSTRUCTION PURPOSES.

CITY OF HOUSTON
HOUSTON PUBLIC WORKS

LIFT STATION RENEWAL AND REPLACEMENT FY 2023

MUD NO. 67 LIFT STATION SECTION DEMOLITION

WBS NUMBER	FOR CITY OF HOUSTON USE ONLY
R-000267-0179-4	
DRAWING SCALE	
HORIZ: AS NOTED VERT: N/A	
CITY OF HOUSTON PM	
NAWARAJ PANTA, P.E.	

DWG. NO.	SHEET NO. 196 OF 321
MUD-C-02	

FILE PATH: \\dseg.com\FS\Projects\0000\005708500 CoH Lift Stations - FY 2023\CAD\DWG\PRODUCTION\196-MUD No 67 SECTION DEMO.dwg

PLOTTED: 12/17/2025 10:16 AM

FILE PATH: \\ideg.com\FS\Projects\0000\005708500 CoH Lift Stations - FY 2023\CAD\DWG\PRODUCTION\197-MUD No 67 PROP SITE PLAN.dwg

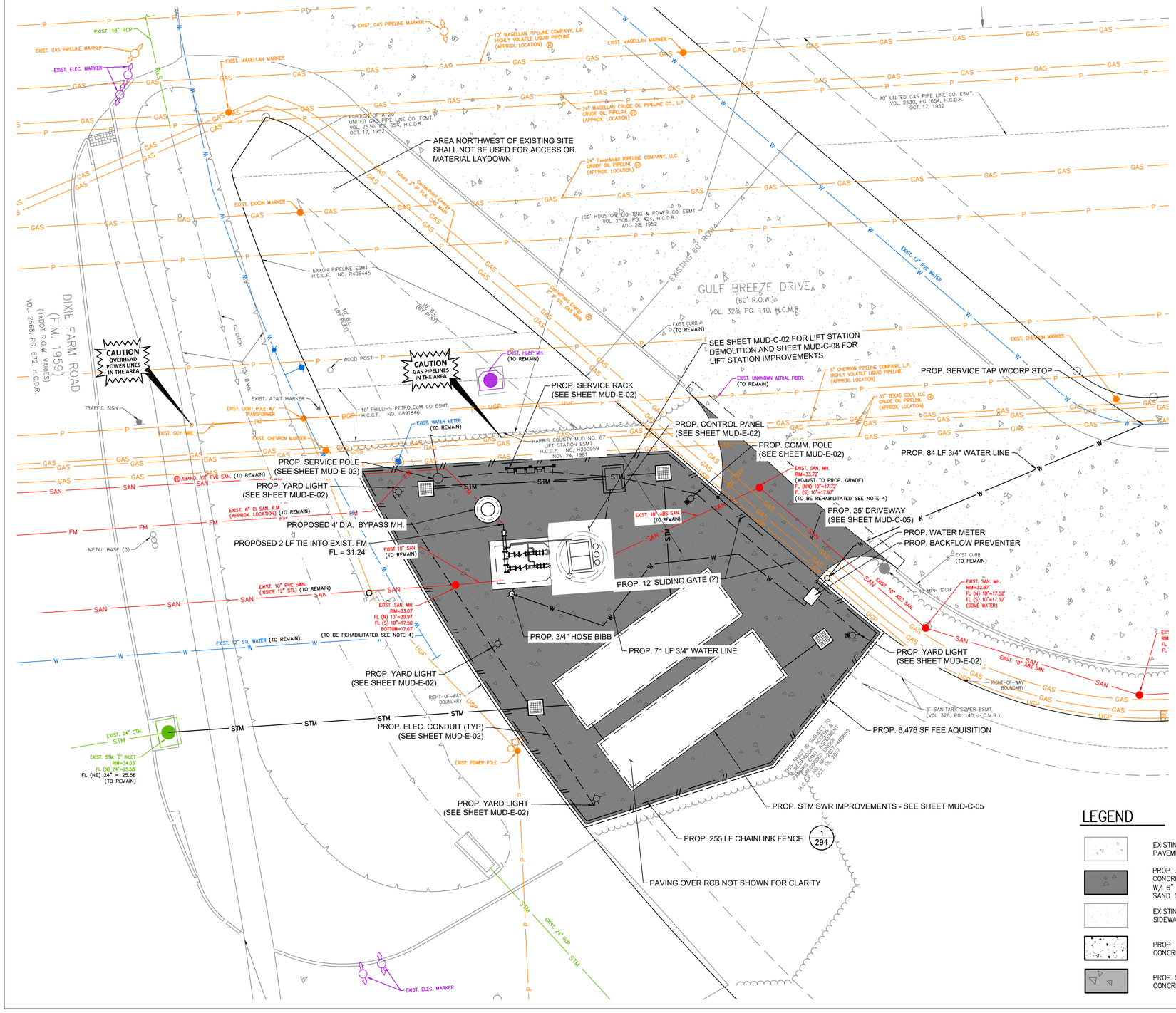

NOTES:

1. EXISTING LIFT STATION WET WELL TO REMAIN.
2. SEE ELECTRICAL PLANS ON SHEETS MUD-E-01-MUD-I-13 FOR ELECTRICAL IMPROVEMENTS.
3. CONTRACTOR SHALL COORDINATE WITH CENTERPOINT ENERGY TO DE-ENERGIZE THE LIFT STATION AND OTHER ELECTRICAL EQUIPMENT ON SITE.
4. REMOVE EXISTING T-LOCK LINER, REPAIR MANHOLE WALL AND RESTORE BENCH PER SPEC 02555, REPLACE MANHOLE FRAME, RING, AND COVER, AND RECOAT WITH A COH APPROVED MATERIAL PER SPEC 09901.
5. DOWEL INTO EXISTING PAVEMENT. USE 24" x #4 SMOOTH DOWELS AT 18" CENTER TO CENTER, CENTERED ON SAWCUT.
6. SANITARY SEWER MANHOLES INSTALLED BELOW THE FLOODPLAIN ELEVATION SHALL HAVE WATERTIGHT MANHOLE FRAMES AND COVERS AS PER SPECIFICATION 02090.
7. CONTRACTOR SHALL FIELD VERIFY THE LOCATION OF THE HOLES DRILLED FOR THE RISER PIPE INSTALLATION THRU THE WET VAULT TOP SLAB.
8. REMOVE THE EXISTING FORCE MAIN TO THE NEAREST PIPE JOINT AND TIE PROP FORCE MAIN TO EXIST. USE RESTRAINED JOINTS.
9. THE EXISTING FORCE MAIN IS ASSUMED TO BE DUCTILE IRON BELL AND SPIGOT AND SHALL BE FIELD VERIFIED BY THE CONTRACTOR.
10. CONTOURS SHOWN ON THIS SHEET WERE DERIVED FROM 2018 HGAC LIDAR AND WERE USED TO CREATE EXISTING DRAINAGE AREAS SHOWN HERE.
11. CONTRACTOR TO PROTECT EXISTING CONDUIT AND CABLE. IF CABLE OR CONDUIT IS DAMAGED DURING CONSTRUCTION, CONTRACTOR SHALL REPLACE AT NO ADDITIONAL COST TO THE CITY.
12. YARD LIGHT POLES, ELECTRICAL & COMMUNICATION POLES, AND SERVICE POLES SHALL BE ABLE TO WITHSTAND ULTIMATE DESIGN WIND SPEED OF 130 MPH, V(ULT).
13. COAT MANHOLE IN ACCORDANCE WITH SYSTEM 108 PER SPEC SECTION 09901 PART 2.03J.
12. CONTRACTOR TO SAW-CUT, REMOVE, AND REPLACE CONCRETE AS NECESSARY. NO SEPARATE PAY.

10' 0' 10'
SCALE
1"=10'

LEGEND

- EXISTING CONCRETE PAVEMENT
- PROP 7" THICK CONCRETE PAVEMENT W/ 6" CEMENT STABILIZED SAND SUBGRADE
- EXISTING CONCRETE SIDEWALK
- PROP 4.5" THICK CONCRETE SIDEWALK
- PROP 5" THICK CONCRETE PAVEMENT
- DETAIL NO. SHEET NO.
- SAW-CUT CONCRETE

BENCHMARK:

FLOODPLAIN REFERENCE MARK NUMBER 010433 IS A BRASS DISC IN CONCRETE STAMPED A119 BM02 LOCATED ON SOUTH SIDEWALK ON DIXIE FARM ROAD BRIDGE APPROXIMATELY 0.21 MILES SOUTHWEST FROM THE INTERSECTION OF IH 45 IN KEYMAP 617E IN THE CLEAR CREEK WATERSHED.

ELEV. 29.92 FEET NAVD 1988, 2001 ADJUSTMENT

FLOODPLAIN NOTE:

FLOODPLAIN REFERENCE MARK NUMBER 010433 IS A BRASS DISC IN CONCRETE STAMPED A119 BM02 LOCATED ON DIXIE FARM ROAD AT TURKEY CREEK ON THE DOWNSTREAM SIDE OF THE BRIDGE.

ELEV. 29.92 FEET NAVD 1988, 2001 ADJUSTMENT
100-YR ELEV. 30.40'
500-YR ELEV. 31.50'
FIRM PANEL: 48201C1060M

EXISTING UTILITY NOTE:

EXISTING UNDERGROUND UTILITY INFORMATION (TYPE, SIZE & OWNERSHIP) ARE SHOWN APPROXIMATELY BASED ON THE AVAILABLE RECORD DRAWINGS AND FIELD VERIFICATION (WHERE FEASIBLE) WITHOUT PROBING AND EXCAVATION. NO WARRANTY IS MADE AS TO THE ACCURACY OR COMPLETENESS OF UTILITY LOCATION SHOWN ON THE DRAWING. CAUTION SHOULD BE EXERCISED WHEN EXCAVATING OR BORE AND JACKING IN THE VICINITY OF UNDERGROUND UTILITIES. OWNERS OF THE UTILITIES SHOULD BE NOTIFIED PRIOR TO SUCH ACTIVITIES. CALL UTILITY COORDINATING COMMITTEE AT 713-223-4567, AT LEAST 48 HOURS PRIOR TO EXCAVATING IN THE STREET RIGHT-OF-WAY.

NO.	DATE	REVISION	APP.

NOTICE:
FOR YOUR SAFETY, YOU ARE REQUIRED BY TEXAS LAW TO CALL 811 AT LEAST 48 HOURS BEFORE YOU DIG SO THAT UNDERGROUND LINES CAN BE MARKED. THIS SIGNATURE DOES NOT FULFILL YOUR OBLIGATION TO CALL 811

VERIFICATION OF PRIVATE UTILITY LINES

Date

CenterPoint Energy natural gas utilities shown. (Gas service lines are not shown). This signature not be used for conflict verification.

Signature valid for six months.

Date

CenterPoint Energy/UNDERGROUND Electrical Facilities Verification ONLY. (This signature verifies existing underground facilities – not to be used for conflict verification)

Signature valid for six months.

Date

Approved for AT&T underground conduit facilities only.
Signature valid for one year.

IDS Engineering Group
13430 NW. Freeway, Suite 700
Houston, Tx. 77040
713.462.3178
TxEng Firm 2726 | TxSurv Firm 10110700

SURVEYED BY: KUO & ASSOCIATES, INC.
TBPE FIRM #F-4578; TBPLS FIRM #1007560

THIS DOCUMENT IS RELEASED FOR THE PURPOSE OF REVIEW UNDER THE AUTHORITY OF MARCEL KHOUW, P.E. 101807 ON 12/17/2025. IT IS NOT TO BE USED FOR CONSTRUCTION PURPOSES.

CITY OF HOUSTON
HOUSTON PUBLIC WORKS

LIFT STATION RENEWAL AND REPLACEMENT FY 2023

MUD NO. 67 LIFT STATION PROPOSED SITE PLAN

WBS NUMBER	FOR CITY OF HOUSTON USE ONLY
R-000267-0179-4	
DRAWING SCALE	
HORIZ: 1" = 10' VERT: N/A	
CITY OF HOUSTON PM	
NAWARAJ PANTA, P.E.	

DWG. NO.	SHEET NO.
MUD-C-03	197 OF 321

PLOTTED: 12/17/2025 8:26 AM

FILE PATH: \\tdseg.com\FS\Projects\0000\005708500 CoH Lift Stations - FY 2023\CAD\DWG\PRODUCTION\198-MUD No 67 GRADING.dwg

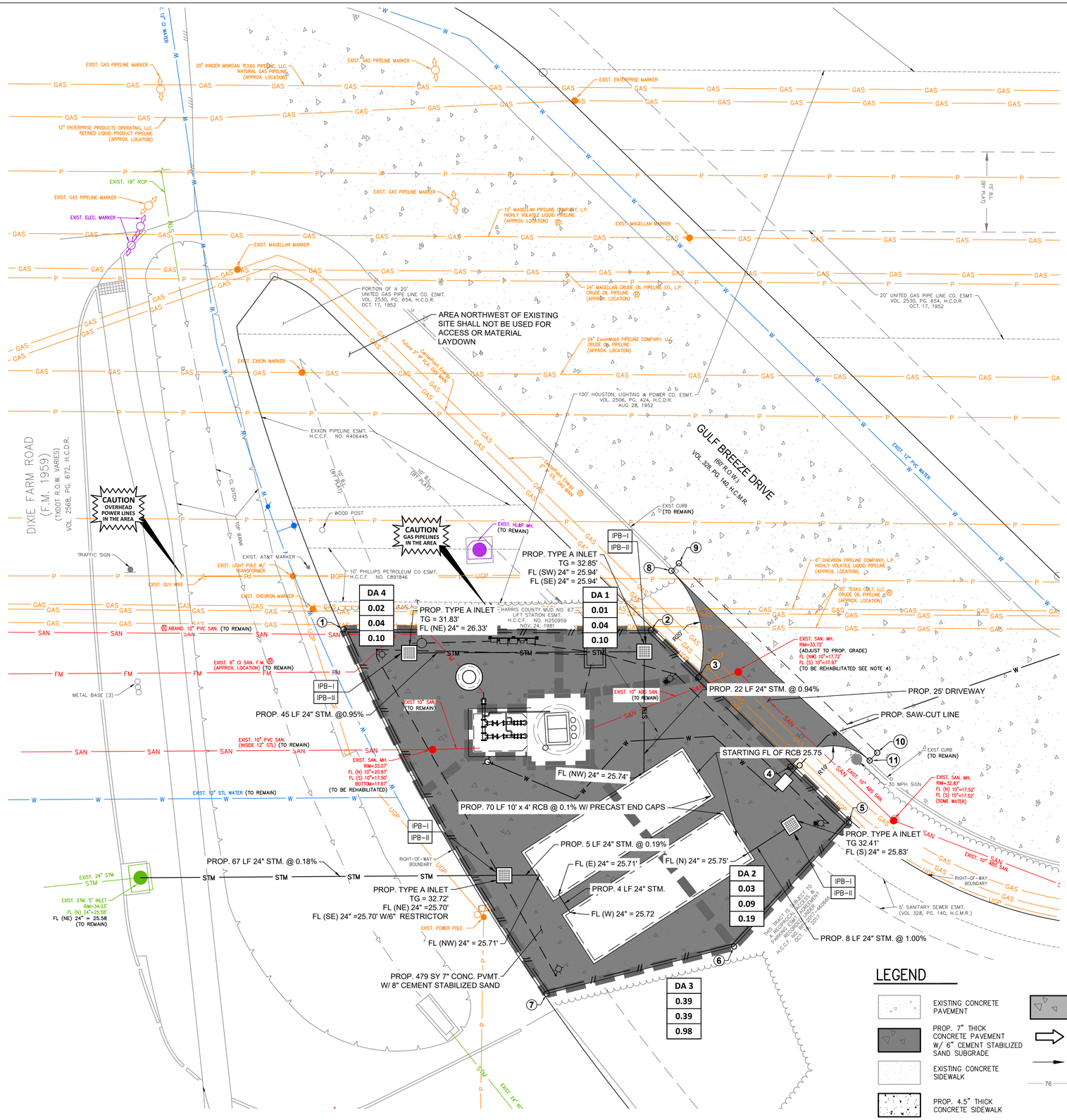
DIXIE FARM ROAD (F.M. 1959) (TXDOT R.O.W. VARIES) VOL. 2568, PG. 672, H.C.D.R.
GULF BREEZE DRIVE (60' R.O.W.) VOL. 328, PG. 140, H.C.M.R.
EXIST. GAS PIPELINE MARKER
20" KINDER MORGAN TEXAS PIPELINE, LLC NATURAL GAS PIPELINE, (APPROX. LOCATION)
12" ENTERPRISE PRODUCTS OPERATING, LLC. REFINED LIQUID PRODUCT PIPELINE (APPROX. LOCATION)
EXIST. 18" RCP
EXIST. ELEC. MARKER
EXIST. MAGELLAN MARKER
EXIST. EXXON MARKER
EXIST. ENTERPRISE MARKER
10" MAGELLAN PIPELINE COMPANY, L.P. HIGHLY VOLATILE LIQUID PIPELINE (APPROX. LOCATION)
24" MAGELLAN CRUDE OIL PIPELINE CO., L.P. CRUDE OIL PIPELINE (APPROX. LOCATION)
24" ExxonMobil PIPELINE COMPANY, LLC CRUDE OIL PIPELINE (APPROX. LOCATION)
6" CHEVRON PIPELINE COMPANY, L.P. HIGHLY VOLATILE LIQUID PIPELINE (APPROX. LOCATION)
30" TEXAS COLT, LLC CRUDE OIL PIPELINE (APPROX. LOCATION)
PORTION OF A 20' UNITED GAS PIPE LINE CO. ESMT. VOL. 2530, PG. 654, H.C.D.R. OCT. 17, 1952
20' UNITED GAS PIPE LINE CO. ESMT. VOL. 2530, PG. 654, H.C.D.R. OCT. 17, 1952
AREA NORTHWEST OF EXISTING SITE SHALL NOT BE USED FOR ACCESS OR MATERIAL LAYDOWN
100' HOUSTON, LIGHTING & POWER CO. ESMT. VOL. 2506, PG. 424, H.C.D.R. AUG. 28, 1952
EXXON PIPELINE ESMT. H.C.C.F. NO. R406445
EXIST. 12" PVC WATER
EXIST. 2" STL. GAS MAIN
EXIST. 3" HP PLA. GAS MAIN
CAUTION OVERHEAD POWER LINES IN THE AREA
CAUTION GAS PIPELINES IN THE AREA
EXIST. HL&P MH. (TO REMAIN)
EXIST. CURB (TO REMAIN)
WOOD POST
TOP BANK
CL DITCH
TRAFFIC SIGN
EXIST. AT&T MARKER
EXIST. LIGHT POLE W/ TRANSFORMER
EXIST. GUY WIRE
EXIST. CHEVRON MARKER
10" PHILLIPS PETROLEUM CO ESMT. H.C.C.F. NO. C891846
HARRIS COUNTY MUD NO. 67 LIFT STATION ESMT. H.C.C.F. NO. H250959 NOV. 24, 1981
ABAND. 12" PVC SAN. (TO REMAIN)
EXIST. 6" CI SAN. F.M. (APPROX. LOCATION) (TO REMAIN)
METAL BASE (3)
EXIST. 10" SAN. (TO REMAIN)
EXIST. 10" PVC SAN. (INSIDE 12" STL.) (TO REMAIN)
EXIST. SAN. MH. RIM=33.07' FL (N) 10"=20.97' FL (S) 10"=17.50' BOTTOM=17.67' (TO BE REHABILITATED)
EXIST. 12" STL. WATER (TO REMAIN)
EXIST. SAN. MH. RIM=33.72' (ADJUST TO PROP. GRADE) FL (NW) 10"=17.72' FL (S) 10"=17.97' (TO BE REHABILITATED SEE NOTE 4)
EXIST. 10" ABS SAN. (TO REMAIN)
EXIST. 10" ABS SAN.
EXIST. SAN. MH. RIM=32.87' FL (N) 10"=17.52' FL (S) 10"=17.52' (SOME WATER)
EXIST. 24" STM.
EXIST. STM. 'C' INLET RIM=34.03' FL (N) 24"=25.58' FL (NE) 24" = 25.58 (TO REMAIN)
EXIST. POWER POLE
PROP. TYPE A INLET TG = 32.85' FL (SW) 24" = 25.94' FL (SE) 24" = 25.94'
PROP. TYPE A INLET TG = 31.83' FL (NE) 24" = 26.33'
PROP. TYPE A INLET TG = 32.72' FL (NE) 24" =25.70' FL (SE) 24" =25.70' W/6" RESTRICTOR
PROP. TYPE A INLET TG 32.41' FL (S) 24" = 25.83'
PROP. 45 LF 24" STM. @0.95%
PROP. 22 LF 24" STM. @ 0.94%
PROP. 67 LF 24" STM. @ 0.18%
PROP. 8 LF 24" STM. @ 1.00%
PROP. 25' DRIVEWAY
PROP. SAW-CUT LINE
STARTING FL OF RCB 25.75
FL (NW) 24" = 25.74'
PROP. 70 LF 10' x 4' RCB @ 0.1% W/ PRECAST END CAPS
PROP. 5 LF 24" STM. @ 0.19%
FL (E) 24" = 25.71'
FL (N) 24" = 25.75'
PROP. 4 LF 24" STM.
FL (W) 24" = 25.72
FL (NW) 24" = 25.71'
PROP. 479 SY 7" CONC. PVMT. W/ 8" CEMENT STABILIZED SAND
PROP. 4 LF 24" STM.
PROP. 5' SIDEWALK
PROP. 4' SIDEWALK
PROP. 6' SIDEWALK
PROP. 7' SIDEWALK
PROP. 8' SIDEWALK
PROP. 10' SIDEWALK
PROP. 12' SIDEWALK
PROP. 15' SIDEWALK
PROP. 20' SIDEWALK
PROP. 25' SIDEWALK
PROP. 30' SIDEWALK
PROP. 35' SIDEWALK
PROP. 40' SIDEWALK
PROP. 45' SIDEWALK
PROP. 50' SIDEWALK
PROP. 55' SIDEWALK
PROP. 60' SIDEWALK
PROP. 65' SIDEWALK
PROP. 70' SIDEWALK
PROP. 75' SIDEWALK
PROP.

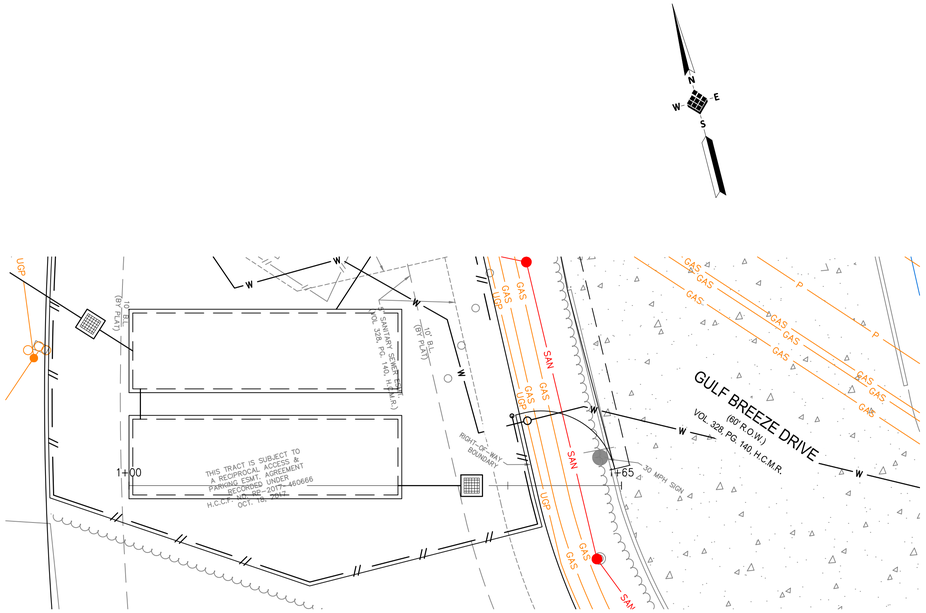

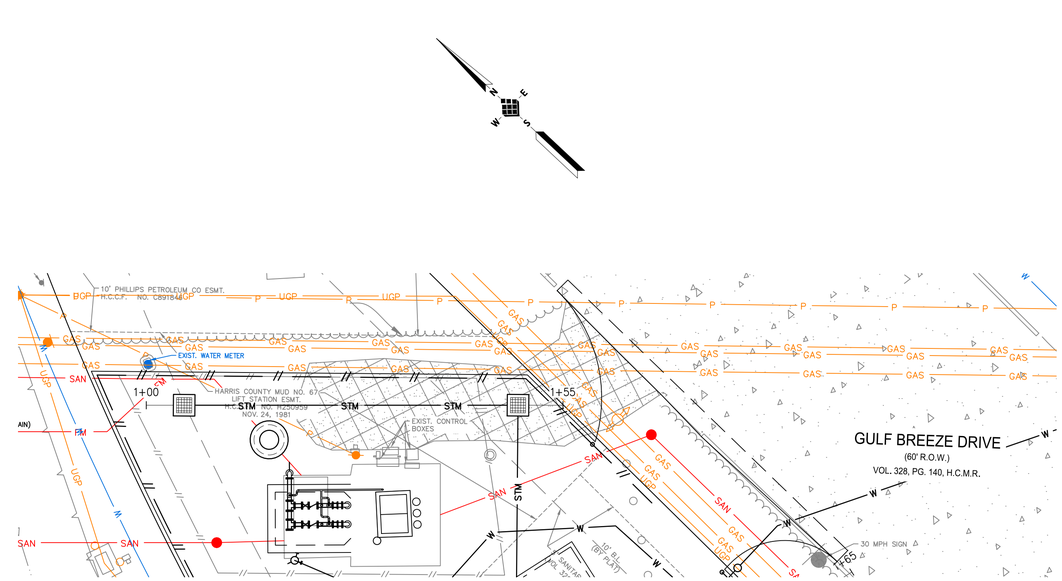

SCALE
10' 0' 10'
H: 1" = 10'
V: 1" = 2'

FOR PERMITTING REVIEW ONLY - TO BE SUBMITTED AT 90%

NO.	DATE	REVISION	APP.

IDS Engineering Group
13430 NW. Freeway, Suite 700
Houston, Tx. 77040
713.462.3178
TxEng Firm 2726 | TxSurv Firm 10110700

SURVEYED BY: KUO & ASSOCIATES, INC.
TBPE FIRM #F-4578; TBPLS FIRM #1007560

THIS DOCUMENT IS RELEASED FOR THE PURPOSE OF REVIEW UNDER THE AUTHORITY OF MARCEL KHOUW, P.E. 101807 ON 12/17/2025. IT IS NOT TO BE USED FOR CONSTRUCTION PURPOSES.

CITY OF HOUSTON
HOUSTON PUBLIC WORKS

LIFT STATION RENEWAL AND REPLACEMENT FY 2023

MUD NO. 67 LIFT STATION PLAN AND PROFILE

WBS NUMBER	FOR CITY OF HOUSTON USE ONLY
R-000267-0179-4	
DRAWING SCALE	
HORIZ: 1" = 10' VERT: 1" = 2'	
CITY OF HOUSTON PM	
NAWARAJ PANTA, P.E.	
SHEET NO. 199 OF 321	

DWG. NO.
MUD-C-04

PLOTTED: 12/17/2025 8:26 AM

FILE PATH: \\idseg.com\FS\Projects\0000\005708500 CoH Lift Stations - FY 2023\CAD\DWG\PRODUCTION\199-MUD No 67 PLAN AND PROFILE.dwg

PLOTTED: 12/17/2025 8:26 AM

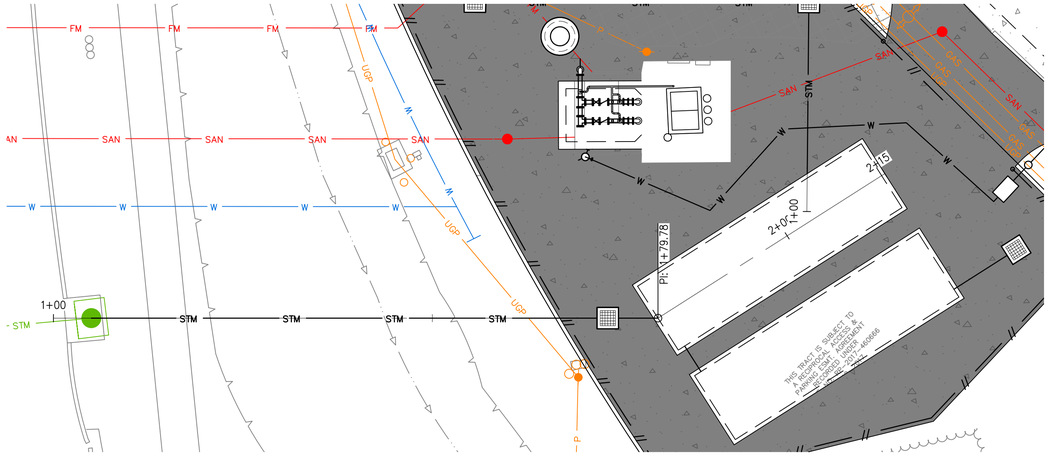

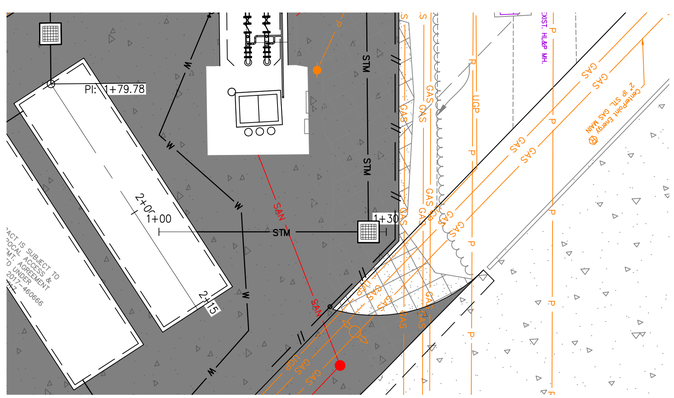

10' 0' 10'
SCALE
H: 1" = 10'
V: 1" = 2'

NO.	DATE	REVISION	APP.

FOR PERMITTING REVIEW ONLY - TO BE SUBMITTED AT 90%

IDS Engineering Group
13430 NW. Freeway, Suite 700
Houston, Tx. 77040
713.462.3178
TxEng Firm 2726 | TxSurv Firm 10110700

SURVEYED BY: KUO & ASSOCIATES, INC.
TBPE FIRM #F-4578; TBPLS FIRM #1007560

THIS DOCUMENT IS RELEASED FOR THE PURPOSE OF REVIEW UNDER THE AUTHORITY OF MARCEL KHOUW, P.E. 101807 ON 12/17/2025. IT IS NOT TO BE USED FOR CONSTRUCTION PURPOSES.

CITY OF HOUSTON
HOUSTON PUBLIC WORKS

LIFT STATION RENEWAL AND REPLACEMENT FY 2023

MUD NO. 67 LIFT STATION PLAN AND PROFILE

WBS NUMBER	FOR CITY OF HOUSTON USE ONLY
R-000267-0179-4	
DRAWING SCALE	
HORIZ: 1" = 10' VERT: 1" = 2'	
CITY OF HOUSTON PM	
NAWARAJ PANTA, P.E.	
SHEET NO. 200 OF 321	

DWG. NO.
MUD-C-05

FILE PATH: \\idseg.com\FS\Projects\0000\005708500 CoH Lift Stations - FY 2023\CAD\DWG\PRODUCTION\200-MUD No 67 PLAN AND PROFILE.dwg

PLOTTED: 12/17/2025 8:26 AM

STORM SEWER CALCULATIONS

IDS ENGINEERING GROUP

CLIENT NAME: **CITY OF HOUSTON**
PROJECT NAME: **WBS NO. R-000267-0179-3 - LOCKWOOD LIFT STATION**
IDS JOB NO: **0057-085-00**
DATE PRINTED: December 9, 2025
DATE REVISED: December 9, 2025 BY: CM

SELECT STORM EVENT FREQUENCY: 2 year
SELECT APPROPRIATE LAND USE: Light Industrial
ENTER DESIGN CURB HEIGHT (inches): 0

Re-Generate Formulas

Line	Manhole or Inlet Number U / S	Manhole or Inlet Number D / S	Reach Length (feet)	Diameter or Rise (inches)	Span (inches)	No. of Barrels	Pipe Material	Pipe Grade Minimum (%)	Pipe Grade Actual (%)	Area (acres)	Sum of Area (acres)	Runoff Coeff.	Sum of C x Area (acres)	Travel Time (minutes)	Time of Concentration (minutes)	Intensity (in./hr.)	Sum of Flows (cfs)	Design Flow (cfs)	Design Velocity (fps)	Actual Velocity (fps)	Hydraulic Gradient (%)	Change in Head (feet)	Upstream Top of Grate (feet)	Hydraulic Grade Upstream (feet)	Hydraulic Grade Downstream (feet)	Manhole Drop (D/S) (feet)	Pipe Flowline Upstream (feet)	Pipe Flowline Downstream (feet)	Depth from Gutter to HGL (feet)	Depth of Cover (feet)	Upstream NG Elev. (feet)	Depth from NG to HGL (feet)
1	A INLET	A INLET	41.26	24		1	RCP	0.180%	0.945%	0.02	0.02	0.65	0.01	49.43	19.8	4.23	0.04	21.99	7.00	0.01	0.000%	0.00	31.83	27.94	27.94		***26.33***	25.94	3.89	3.50	31.83	3.89
2	A INLET	***RCB DET***	21.23	24		1	RCP	0.180%	0.942%	0.01	0.02	0.65	0.01	25.44	69.3	2.05	0.04	21.96	6.99	0.01	0.000%	0.00	32.85	27.74	27.74		***25.94***	***25.74***	5.11	4.91	32.85	5.11
3	A INLET	***RCB DET***	8.31	24		1	RCP	0.180%	0.963%	0.03	0.03	0.65	0.02	5.06	20.4	4.16	0.09	22.20	7.07	0.03	0.000%	0.00	32.41	27.75	27.75		***25.83***	***25.75***	4.66	4.58	32.41	4.66
4	RCB DET	A INLET	5.20	24		1	RCP	0.180%	0.180%	0.05	0.05	0.65	0.03	1.92	21.0	4.11	0.14	9.60	3.06	0.05	0.000%	0.00	32.72	27.70	27.70		25.71	25.70	5.02	5.01	32.72	5.02
5	A INLET	***STM MH***	66.74	24		1	RCP	0.180%	0.180%	0.033	0.09	0.65	0.06	15.86	22.9	3.93	0.22	9.60	3.06	0.07	0.000%	0.00	32.72	27.58	27.58		25.70	***25.58***	5.14	5.02	32.72	5.14

NOTES:
1. This spreadsheet has been developed using the City of Houston criteria outlined in the November 2023 Infrastructure Design Manual. The Rational Method has been used to calculate flows, and Manning's Formula for pipes flowing full has been used to calculate velocities.
2. This spreadsheet calculates rainfall intensity using the b, d, and e constants for Harris County and the City of Houston, as outlined in Appendix H of the Harris County Infrastructure Regulations, and Chapter 9 of the November 2023 City of Houston Infrastructure Design Manual
3. Minimum storm sewer grades and maximum velocities as established in the City of Houston design criteria have been used to establish the grades used in this system.
4. Land Use "SFR" represents Single-Family Residential development. Land Use "MFR" represents Multi-Family Residential development.
5. Design flow and velocity are based entirely on pipe grade and represent the condition when pipe is flowing full with the hydraulic grade line equal to the pipe grade, and are used to demonstrate that the pipe slopes used in the calculations conform to the City of Houston minimum and maximum standards.

Runoff Coefficient Table	
Land Use	C
SFR (> ½ ac. lots)	0.35
SFR (¼ - ½ ac. lots)	0.45
SFR (< ¼ ac. lots)	0.55
MFR (< 20 d.u./ac.)	0.65
MFR (>= 20 d.u./ac.)	0.80
Business Districts	0.80
Light Industrial	0.65
Heavy Industrial	0.75
Railroad Yard Areas	0.30
Parks/Open Areas	0.18
Land Use Varies	ENTER

Pipe Material	Mannings "n" Value	Pipe Description
CLAY	0.012	Extra Strength Vitrified Clay Pipe
CMP	0.024	Corrugated Metal Pipe
CMPSI	0.013	CMP w/ Smooth Interior
HDPE	0.013	High Density Polyethylene Pipe
PVC	0.013	Polyvinyl Chloride Pipe
RCA	0.013	Reinforced Concrete Arch Pipe
RCB	0.015	Reinforced Concrete Box Culvert
RCE	0.013	Reinforced Concrete Elliptical Pipe
RCP	0.013	Reinforced Concrete Pipe

Rainfall Freq. (yrs)	b	d	e
2 year	***48.35***	***9.07***	***0.7244***
5 year	52.32	7.88	0.6900
10 year	54.68	6.96	0.6623
25 year	57.79	5.89	0.6294
50 year	61.00	5.46	0.6096
100 year	60.66	4.44	0.5797
500 year	62.17	2.95	0.5196

STORM SEWER CALCULATIONS

IDS ENGINEERING GROUP

CLIENT NAME: **CITY OF HOUSTON**
PROJECT NAME: **WBS NO. R-000267-0179-3 - LOCKWOOD LIFT STATION**
IDS JOB NO: **0057-085-00**
DATE PRINTED: December 9, 2025
DATE REVISED: December 9, 2025 BY: CM

SELECT STORM EVENT FREQUENCY: 100 year
SELECT APPROPRIATE LAND USE: Light Industrial
ENTER DESIGN CURB HEIGHT (inches): 0

Re-Generate Formulas

Line	Manhole or Inlet Number U / S	Manhole or Inlet Number D / S	Reach Length (feet)	Diameter or Rise (inches)	Span (inches)	No. of Barrels	Pipe Material	Pipe Grade Minimum (%)	Pipe Grade Actual (%)	Area (acres)	Sum of Area (acres)	Runoff Coeff.	Sum of C x Area (acres)	Travel Time (minutes)	Time of Concentration (minutes)	Intensity (in./hr.)	Sum of Flows (cfs)	Design Flow (cfs)	Design Velocity (fps)	Actual Velocity (fps)	Hydraulic Gradient (%)	Change in Head (feet)	Upstream Top of Grate (feet)	Hydraulic Grade Upstream (feet)	Hydraulic Grade Downstream (feet)	Manhole Drop (D/S) (feet)	Pipe Flowline Upstream (feet)	Pipe Flowline Downstream (feet)	Depth from Gutter to HGL (feet)	Depth of Cover (feet)	Upstream NG Elev. (feet)	Depth from NG to HGL (feet)
1	A INLET	A INLET	41.26	24		1	RCP	0.180%	0.945%	0.02	0.02	0.65	0.01	21.89	19.8	9.55	0.10	21.99	7.00	0.03	0.000%	0.00	31.83	27.94	27.94		***26.33***	25.94	3.89	3.50	31.83	3.89
2	A INLET	***RCB DET***	21.23	24		1	RCP	0.180%	0.942%	0.01	0.02	0.65	0.01	11.26	41.7	6.58	0.10	21.96	6.99	0.03	0.000%	0.00	32.85	27.74	27.74		***25.94***	***25.74***	5.11	4.91	32.85	5.11
3	A INLET	***RCB DET***	8.31	24		1	RCP	0.180%	0.963%	0.03	0.03	0.65	0.02	2.24	20.4	9.41	0.19	22.20	7.07	0.06	0.000%	0.00	32.41	27.75	27.75		***25.83***	***25.75***	4.66	4.58	32.41	4.66
4	RCB DET	A INLET	5.20	24		1	RCP	0.180%	0.180%	0.05	0.05	0.65	0.03	0.85	21.0	9.30	0.32	9.60	3.06	0.10	0.000%	0.00	32.72	27.70	27.70		25.71	25.70	5.02	5.01	32.72	5.02
5	A INLET	***STM MH***	66.74	24		1	RCP	0.180%	0.180%	0.033	0.09	0.65	0.06	6.84	21.8	9.12	0.51	9.60	3.06	0.16	0.001%	0.00	32.72	27.58	27.58		25.70	***25.58***	5.14	5.02	32.72	5.14

NOTES:
1. This spreadsheet has been developed using the City of Houston criteria outlined in the November 2023 Infrastructure Design Manual. The Rational Method has been used to calculate flows, and Manning's Formula for pipes flowing full has been used to calculate velocities.
2. This spreadsheet calculates rainfall intensity using the b, d, and e constants for Harris County and the City of Houston, as outlined in Appendix H of the Harris County Infrastructure Regulations, and Chapter 9 of the November 2023 City of Houston Infrastructure Design Manual
3. Minimum storm sewer grades and maximum velocities as established in the City of Houston design criteria have been used to establish the grades used in this system.
4. Land Use "SFR" represents Single-Family Residential development. Land Use "MFR" represents Multi-Family Residential development.
5. Design flow and velocity are based entirely on pipe grade and represent the condition when pipe is flowing full with the hydraulic grade line equal to the pipe grade, and are used to demonstrate that the pipe slopes used in the calculations conform to the City of Houston minimum and maximum standards.

Runoff Coefficient Table	
Land Use	C
SFR (> ½ ac. lots)	0.35
SFR (¼ - ½ ac. lots)	0.45
SFR (< ¼ ac. lots)	0.55
MFR (< 20 d.u./ac.)	0.65
MFR (>= 20 d.u./ac.)	0.80
Business Districts	0.80
Light Industrial	0.65
Heavy Industrial	0.75
Railroad Yard Areas	0.30
Parks/Open Areas	0.18
Land Use Varies	ENTER

Pipe Material	Mannings "n" Value	Pipe Description
CLAY	0.012	Extra Strength Vitrified Clay Pipe
CMP	0.024	Corrugated Metal Pipe
CMPSI	0.013	CMP w/ Smooth Interior
HDPE	0.013	High Density Polyethylene Pipe
PVC	0.013	Polyvinyl Chloride Pipe
RCA	0.013	Reinforced Concrete Arch Pipe
RCB	0.015	Reinforced Concrete Box Culvert
RCE	0.013	Reinforced Concrete Elliptical Pipe
RCP	0.013	Reinforced Concrete Pipe

Rainfall Freq. (yrs)	b	d	e
2 year	48.35	9.07	0.7244
5 year	52.32	7.88	0.6900
10 year	54.68	6.96	0.6623
25 year	57.79	5.89	0.6294
50 year	61.00	5.46	0.6096
100 year	***60.66***	***4.44***	***0.5797***
500 year	62.17	2.95	0.5196

Master Spreadsheet - Storm Sewer Calculations Updated 02/10/2025
\\idseg.com\FS\Projects\0000\005708500 CoH Lift Stations - FY 2023\Eng\Calcs\Drainage\[5. MUD #67 Drainage Calcs.xlsx]CALCULATIONS

NO.	DATE	REVISION	APP.

IDS Engineering Group
13430 NW. Freeway, Suite 700
Houston, Tx. 77040
713.462.3178
TxEng Firm 2726 | TxSurv Firm 10110700

SURVEYED BY: KUO & ASSOCIATES, INC.
TBPE FIRM #F-4578; TBPLS FIRM #1007560

THIS DOCUMENT IS RELEASED FOR THE PURPOSE OF REVIEW UNDER THE AUTHORITY OF MARCEL KHOUW, P.E. 101807 ON 12/17/2025. IT IS NOT TO BE USED FOR CONSTRUCTION PURPOSES.

CITY OF HOUSTON
HOUSTON PUBLIC WORKS

LIFT STATION RENEWAL AND REPLACEMENT FY 2023

MUD NO. 67 LIFT STATION DRAINAGE CALCULATIONS

WBS NUMBER	FOR CITY OF HOUSTON USE ONLY
R-000267-0179-4	
DRAWING SCALE	
HORIZ: N/A VERT: N/A	
CITY OF HOUSTON PM	
NAWARAJ PANTA, P.E.	
SHEET NO. 201 OF 321	

DWG. NO. MUD-C-06

FILE PATH: \\idseg.com\FS\Projects\0000\005708500 CoH Lift Stations - FY 2023\CAD\DWG\PRODUCTION\201-MUD No 67 CALCULATIONS.dwg

PLOTTED: 12/17/2025 8:26 AM

FILE PATH: \\idseg.com\FS\Projects\0000\005708500 CoH Lift Stations - FY 2023\CAD\DWG\PRODUCTION\202-MUD No 67 PLAN AT GRADE.dwg

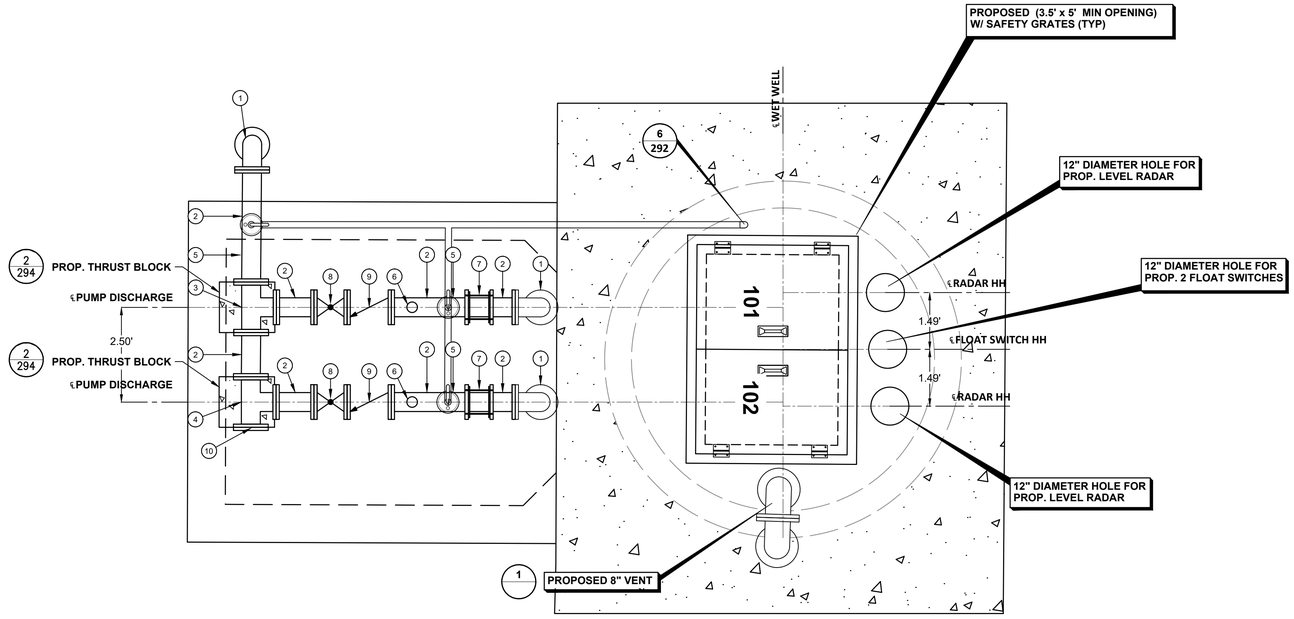

ITEMS TO BE REMOVED & REPLACED		
KEYED NOTES	ITEM	QTY
1	90° BEND (6")	3
2	SPOOL PIECE (6")	8
3	TEE (6" x 6")	1
4	TEE (6" x 6") W/ BLIND FLANGE (6")	1
5	2" AIR RELEASE & VACUUM VALVE ASSEMBLY	3
6	PRESSURE GAUGE ASSEMBLY	2
7	FLEXIBLE COUPLING (6")	2
8	PLUG VALVE (6")	2
9	CHECK VALVE (6")	2
10	BLIND FLANGE (6")	1

NOTES:

1. ABRASIVE BLAST AND COAT ALL PIPING AND FITTINGS NOT BEING REPLACED IN WET WELL.
2. CONTRACTOR TO VERIFY DIMENSIONS REQUIRED TO INSTALL AND OPERATE VALVES.
3. EXISTING LIFT STATION WET WELL STRUCTURE TO REMAIN.
4. UV PROTECTIVE COATINGS ARE REQUIRED BY THE CITY OF HOUSTON ON ALL VENT PIPES.
5. LABEL HATCHES WITH THE CORRESPONDING PUMP NUMBER USING A 12–INCH BY 6–INCH ALUMINUM PLATE ENGRAVED WITH 1.5–INCH LETTERING WELDED TO THE HATCH.
6. CONTRACTOR TO CONFIRM SIZE AND LOCATION OF THE WET WELL HATCHES PER HATCH AND PUMP MANUFACTURER REQUIREMENTS.
7. PUMP AND ANCHOR BOLTS ARE TO BE ADHESIVE TYPE, AND EMBEDDED IN THE CONCRETE SLAB. CONTRACTOR TO SUBMIT DESIGN OF PUMP ANCHOR BOLTS AND PATTERNS, INCLUDING CALCULATIONS, DURING SHOP DRAWING SUBMISSION.
8. ACCESS HATCHES SHALL BE FOREST GREEN. SAFETY GRATING SHALL BE FURNISHED WITH SAFETY ORANGE POWDER COAT FINISH.

NO.	DATE	REVISION	APP.

LEGEND

- # / # — DETAIL NO. / SHEET NO.
- EXIST. CONCRETE
- PROP. CONCRETE

PLAN VIEW AT GRADE

SCALE: 1" = 4'

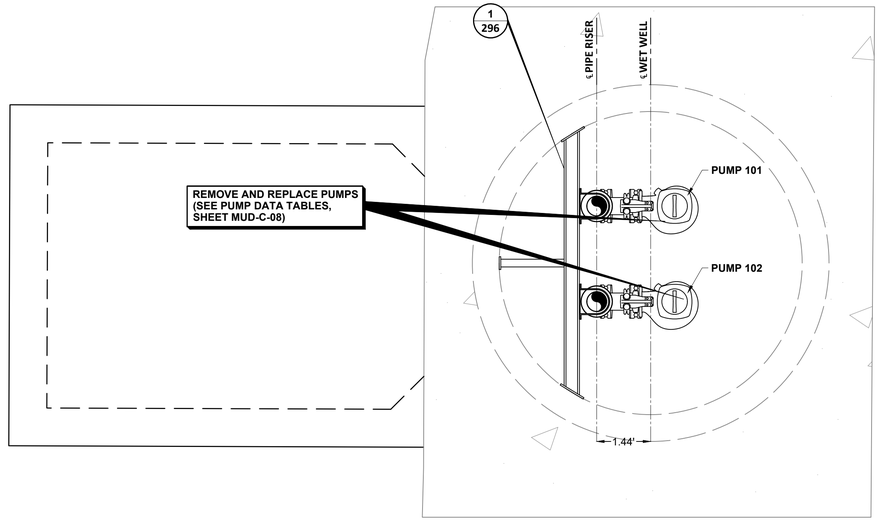

SECTION A-A VIEW A

1" = 4'

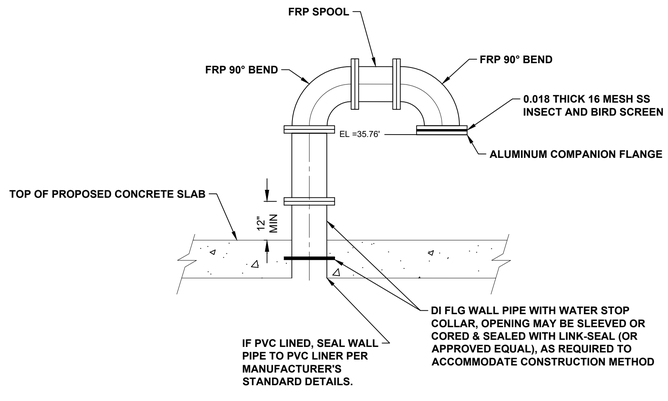

PROPOSED STRUCTURE PENETRATION 1

N.T.S.

IDS Engineering Group
13430 NW. Freeway, Suite 700
Houston, Tx. 77040
713.462.3178
TxEng Firm 2726 | TxSurv Firm 10110700

SURVEYED BY: KUO & ASSOCIATES, INC.
TBPE FIRM #F-4578; TBPLS FIRM #1007560

THIS DOCUMENT IS RELEASED FOR THE PURPOSE OF REVIEW UNDER THE AUTHORITY OF MARCEL KHOUW, P.E. 101807 ON 12/17/2025. IT IS NOT TO BE USED FOR CONSTRUCTION PURPOSES.

CITY OF HOUSTON
HOUSTON PUBLIC WORKS

LIFT STATION RENEWAL AND REPLACEMENT FY 2023

MUD NO. 67 LIFT STATION PLAN AT GRADE AND BASE

WBS NUMBER	FOR CITY OF HOUSTON USE ONLY
R-000267-0179-4	
DRAWING SCALE	
HORIZ: AS NOTED VERT: N.A	
CITY OF HOUSTON PM	
NAWARAJ PANTA, P.E.	
SHEET NO. 202 OF 321	

DWG. NO. MUD-C-07

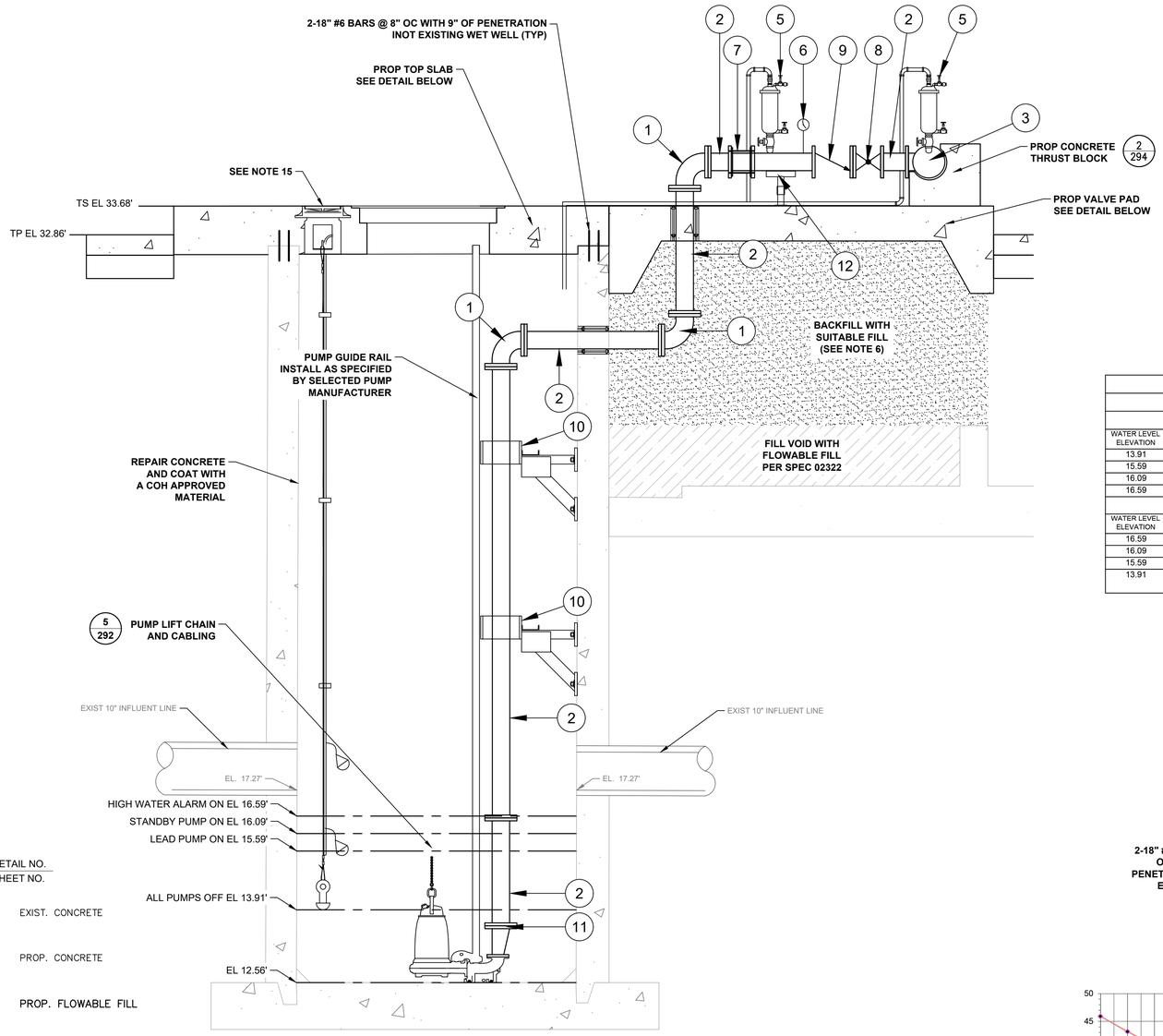

SECTIONAL ELEVATION A

SCALE: 1" = 2'

LEGEND

- # / # — DETAIL NO. / SHEET NO.
- EXIST. CONCRETE
- PROP. CONCRETE
- PROP. FLOWABLE FILL

ITEMS TO BE REMOVED & REPLACED		
KEYED NOTES	ITEM	QTY
1	90° BEND (6")	2
2	SPOOL PIECE (6")	7
3	TEE (6" x 6")	1
4	TEE (6" x 6") W/ BLIND FLANGE (6")	0
5	2" AIR RELEASE & VACUUM VALVE ASSEMBLY	2
6	PRESSURE GAUGE ASSEMBLY	1
7	FLEXIBLE COUPLING (6")	1
8	PLUG VALVE	1
9	CHECK VALVE	1
10	316 STAINLESS STEEL SUPPORT	2
11	ECCENTRIC REDUCER (6" x 4")	1
12	ADJUSTABLE PIPE SUPPORT	2

STATION OPERATING TABLES

PROPOSED CONDITION - 0.58 MGD

RISING WATER LEVEL

WATER LEVEL ELEVATION	ACTION	PUMP(S) IN OPERATION
13.91	PUMPS OFF LEVEL - NO ACTION	ALL PUMPS ARE OFF
15.59	LEAD PUMP TURNS ON	LEAD PUMP ON
16.09	STANDBY PUMP TURNS ON	LEAD AND STANDBY PUMP ON
16.59	HIGH WATER ALARM ON	HIGH WATER ALARM SOUND

FALLING WATER LEVEL

WATER LEVEL ELEVATION	ACTION	PUMP(S) IN OPERATION
16.59	HIGH WATER ALARM ON	HIGH WATER ALARM SOUND
16.09	HIGH WATER LEVEL ALARM OFF	LEAD AND STANDBY PUMP ON
15.59	LEAD PUMP TURNS OFF	STANDBY PUMP ON
13.91	STANDBY PUMP TURNS OFF	ALL PUMPS STOPPED - STANDBY PUMP SWITCHES TO LEAD PUMP PUMP ON

NOTES:

1. ABRASIVE BLAST AND COAT ALL PIPING AND FITTINGS NOT BEING REPLACED IN WET WELL.
2. CONTRACTOR TO VERIFY DIMENSIONS REQUIRED TO INSTALL AND OPERATE VALVES.
3. EXISTING LIFT STATION WET WELL STRUCTURE TO REMAIN.
4. UV PROTECTIVE COATINGS ARE REQUIRED BY THE CITY OF HOUSTON ON ALL VENT PIPES.
5. LABEL HATCHES WITH THE CORRESPONDING PUMP NUMBER USING A 12–INCH BY 6–INCH ALUMINUM PLATE ENGRAVED WITH 1.5–INCH LETTERING WELDED TO THE HATCH.
6. FILL VOID LEFT BY REMOVAL OF EXISTING VALVE VAULT WITH SUITABLE FILL.
7. SEE ELECTRICAL PLANS FOR ADDITIONAL IMPROVEMENTS.
8. ABRASIVE BLAST AND COAT TO BE IN ACCORDANCE WITH SYSTEM 108 PER SPEC SECTION 09901 PART 2.03J.
9. CONTRACTOR TO CONFIRM SIZE AND LOCATION OF THE WET WELL HATCHES PER HATCH AND PUMP MANUFACTURER REQUIREMENTS
10. PUMP AND ANCHOR BOLTS ARE THE BE ADHESIVE TYPE, AND EMBEDDED IN THE CONCRETE SLAB. CONTRACTOR TO SUBMIT DESIGN OF PUMP ANCHOR BOLTS AND PATTERN, INCLUDING CALCULATIONS, DURING SHOP DRAWINGS SUBMISSION.
11. ALL PIPING IN THE WET WELL SHALL BE FLANGED. NO FLANGED COUPLING ADAPTORS, OR VICTAULIC STYLE COUPLINGS SHALL BE PERMITTED INSIDE OF THE WET WELL.
12. ACCESS HATCHES SHALL BE FOREST GREEN. SAFETY GRATING SHALL BE FURNISHED WITH SAFETY ORANGE POWDER COAT FINISH.
13. INSTALL PLUG VALVES TO OPEN UPWARD AND TO CLOSE TO A SEATING POSITION.
14. INSTALL CHECK VALVES SO THAT THE WEIGHT LEVER POSITION IS APPROXIMATELY 45 DEGREES BELOW THE VALVE HORIZONTAL CENTER LINE IN THE CLOSE POSITION AND APPROXIMATELY 45 DEGREES ABOVE THE HORIZONTAL CENTER LINE IN THE FULL OPEN POSITION.
15. PROPOSED FLOAT SWITCH AND LEVEL RADARS SHOWN FOR REFERENCE. REFER TO (MUD–C–07) FOR LOCATION AND SIZE

DISCHARGE PIPING CONCRETE SLAB DETAIL

SCALE: 1" = 2'

PUMP DATA TABLE*

PUMP CHARACTERISTICS	PUMP NO. 1	PUMP NO. 2
MOTOR DATA		
NOMIMAL SIZE (HP)	5.5	5.5
MAX SPEED (RPM)	1800	1800
SOLIDS PASSAGE		
MINIMUM SPHERE (IN)	3	3
CAPACITY (GPM)		
DESIGN	413	413
RUNOUT	761	761
Actual Cumulative Flow	148	
DISCHARGE HEAD (FT)		
DESIGN	24.41	24.41
RUNOUT	2	2
SHUT OFF	46.1	46.1
EFFICIENCY (%)		
DESIGN	65.8	65.8
NPSHR (FT)		
DESIGN	15.8	15.8

*FLYGT NP 3102 MT 3 ~ Adaptive 464 used for all pump calculations.

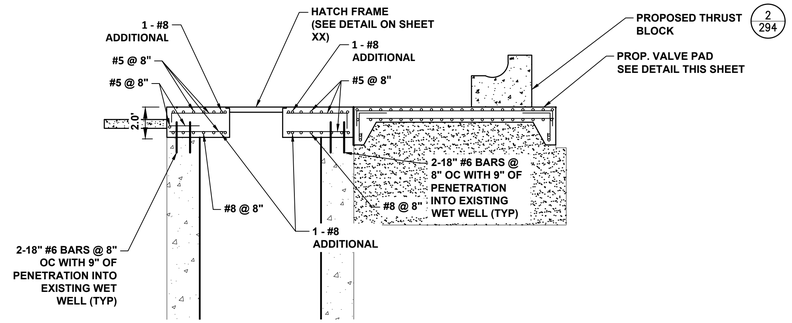

WET WELL TOP SLAB DETAIL

SCALE: 1"=5'

DESIGN POINT
403 GPM @ 24.41 FT

MUD #67 LIFT STATION
REHABILITATION - FLYGT NP 3102 MT 3 ~ ADAPTIVE 464

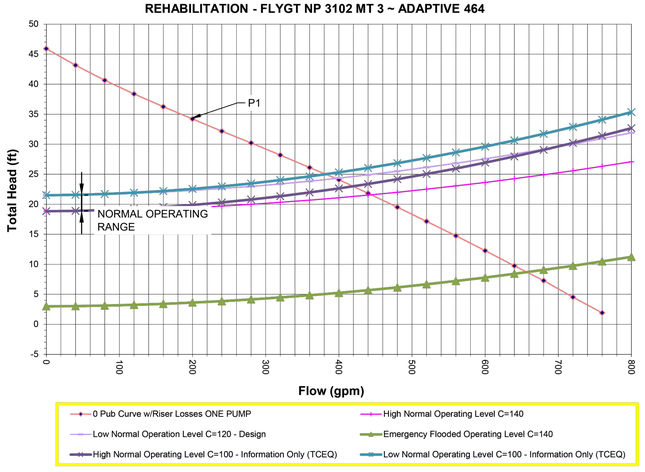

NO.	DATE	REVISION	APP.

IDS Engineering Group
13430 NW. Freeway, Suite 700
Houston, Tx. 77040
713.462.3178
TxEng Firm 2726 | TxSurv Firm 10110700

SURVEYED BY: KUO & ASSOCIATES, INC.
TBPE FIRM #F-4578; TBPLS FIRM #1007560

THIS DOCUMENT IS RELEASED FOR THE PURPOSE OF REVIEW UNDER THE AUTHORITY OF MARCEL KHOUW, P.E. 101807 ON 12/17/2025. IT IS NOT TO BE USED FOR CONSTRUCTION PURPOSES.

CITY OF HOUSTON

HOUSTON PUBLIC WORKS

LIFT STATION RENEWAL AND REPLACEMENT FY 2023

MUD NO. 67 LIFT STATION ELEVATION SECTION

WBS NUMBER	FOR CITY OF HOUSTON USE ONLY
R–000267–0179–4	
DRAWING SCALE	
HORIZ: AS NOTED VERT: N/A	
CITY OF HOUSTON PM	
NAWARAJ PANTA, P.E.	
DWG. NO. MUD–C–08	SHEET NO. 203 OF 321

PLOTTED: 12/17/2025 8:26 AM
FILE PATH: \\idseg.com\FS\Projects\0000\005708500 CoH Lift Stations – FY 2023\CAD\DWG\PRODUCTION\203–MUD No 67 ELEV SECTION.dwg

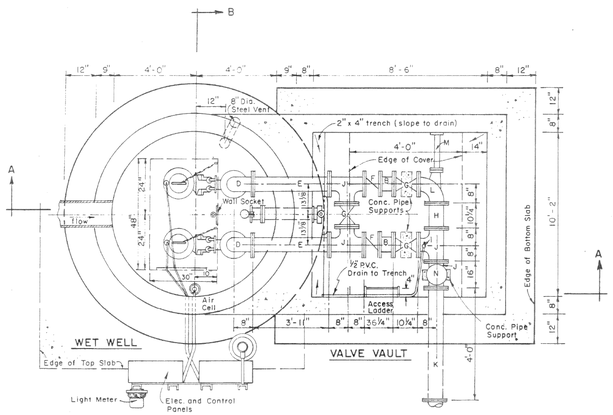

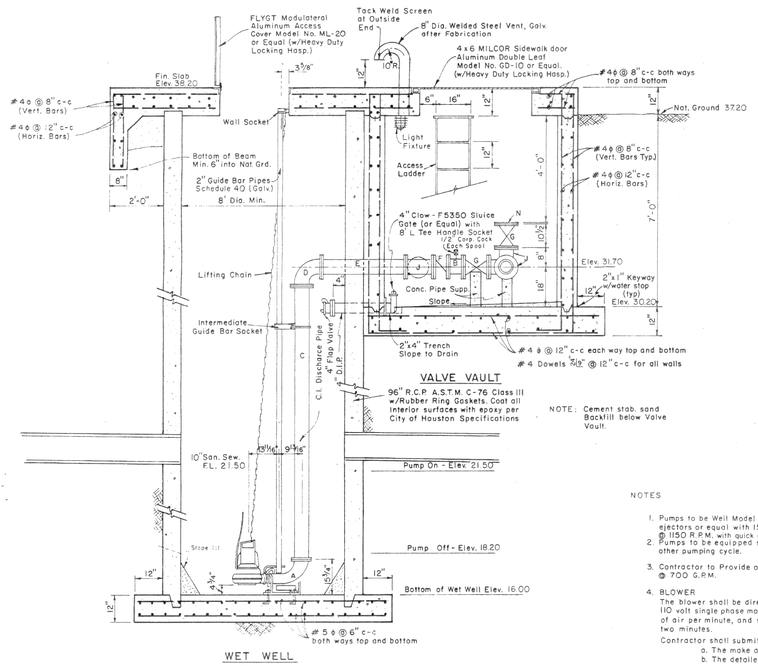

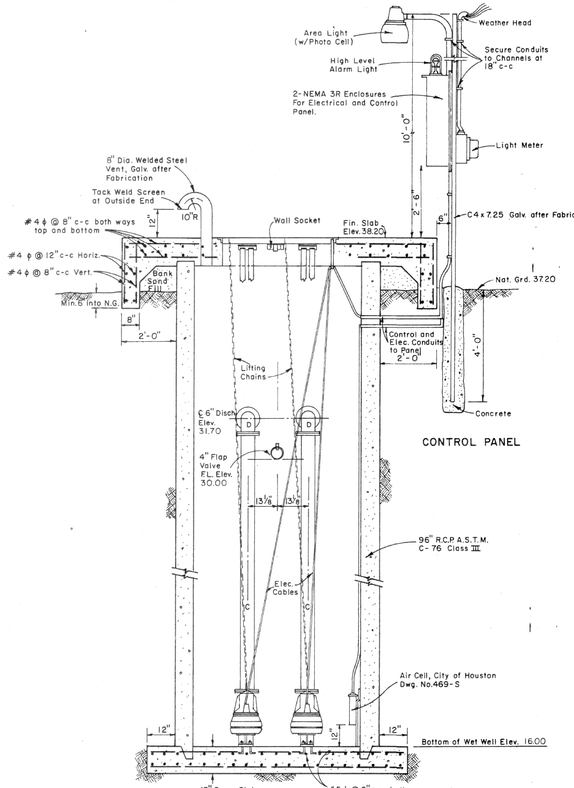

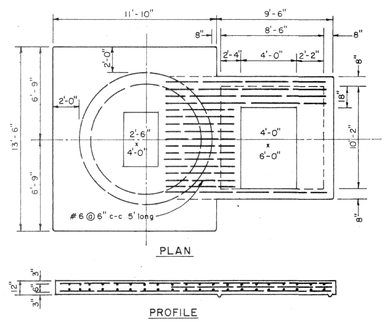

NOTES

1. Pumps to be Weil Model C-2606I6 submersible sewage ejectors or equal with 15 H.P. motors rated at 400 G.P.M. @ 1150 R.P.M. with quick disconnect system.
2. Pumps to be equipped so that they alternate on every other pumping cycle.
3. Contractor to Provide one set extra 11" impellers to rate pumps @ 700 G.P.M.
4. BLOWER
   The blower shall be direct connected to a 1/4 H.P., 1750 R.P.M., 110 volt single phase motor, capable of delivering 400 cubic feet of air per minute, and supply a complete change of air every two minutes.
   Contractor shall submit to Engineer for approval:
   a. The make and model of blower.
   b. The detailed proposed installation of blower.
5. LIGHTS
   2-150 Watt Multi Vaporproof Fixtures with Guard, Cat. 3225 or equal to be equipped with Door Switch so that Light and Blower are on when door is open.

PIPE FITTING SCHEDULE

ITEM	DESCRIPTION	LENGTH
A	6" x 90° Bend with Base (By Pump Supplier)	15¾ B/F
B	6" D.I. Pipe Nipple	12" F/F
C	6" D.I. Pipe Nipple	14'-5½" F/F
D	6" x 90° Short Radius Bend	8" F/F
E	6" D.I. Pipe Nipple	47" F/F
F	6" FLYGT HDL Ball Check Valve, Type 2016	24¼" F/F
G	6" Homestead Non-Lubricated Ballcentric Valve	10¾ F/F
H	6" D.I. Pipe Nipple	10¾ F/F
I	Corporation Stop, Tapped into Top of 6"x6"x6" Tee	N/A
J	6"x6"x6" Tee	16" F/F
K	6" D.I. Pipe Nipple	48" F/PE
L	6" x 90° Short Radius Base Bend	8" F/F
M	2" Pipe Brace	Fld. Meas.
N	6" Blind Flange	1"

KEY MAP 617 A-B-E-F

ELLINGTON GULF BREEZE PARK

HARRIS COUNTY MUNICIPAL UTILITY DISTRICT NO. 67

LIFT STATION DETAILS

L. C. LOPER & ASSOCIATES, INC.
CONSULTING ENGINEER
HOUSTON, TEXAS
666-2838

3/4/17

SHEET 8 OF 13

NO.	DATE	REVISION	APP.

IDS Engineering Group
13430 NW. Freeway, Suite 700
Houston, Tx. 77040
713.462.3178
TxEng Firm 2726 | TxSurv Firm 10110700

SURVEYED BY: KUO & ASSOCIATES, INC.
TBPE FIRM #F-4578; TBPLS FIRM #1007560

THIS DOCUMENT IS RELEASED FOR THE PURPOSE OF REVIEW UNDER THE AUTHORITY OF MARCEL KHOUW, P.E. 101807 ON 12/17/2025. IT IS NOT TO BE USED FOR CONSTRUCTION PURPOSES.

CITY OF HOUSTON
HOUSTON PUBLIC WORKS

LIFT STATION RENEWAL AND REPLACEMENT FY 2023

EXISTING LIFT STATION RECORD DRAWING

WBS NUMBER	FOR CITY OF HOUSTON USE ONLY
R-000267-0179-4	
DRAWING SCALE	
HORIZ: AS NOTED VERT: N/A	
CITY OF HOUSTON PM	
NAWARAJ PANTA, P.E.	
DWG. NO. MUD-C-09	SHEET NO. 204 OF 321

FOR REFERENCE ONLY

PLOTTED: 12/17/2025 8:27 AM
FILE PATH: \\idseg.com\FS\Projects\0000\005708500 CoH Lift Stations - FY 2023\CAD\DWG\PRODUCTION\204-MUD No 67 RECORD DWG.dwg

PLOTTED: 12/11/2025 8:30 PM

NOTES BY SYMBOL "⟨#⟩":

⟨1⟩ EXISTING SERVICE POLE, SERVICE RACK , CONTROL PANEL AND WIMAX BOX TO BE DEMOLISHED AND REMOVED.



EXISTING SERVICE POLE & RACK

PHOTOGRAPH A ⟨1⟩ — NTS —



EXISTING CONTROL PANEL

PHOTOGRAPH B ⟨1⟩ — NTS —



EXISTING WIMAX BOX

PHOTOGRAPH B ⟨1⟩ — NTS —

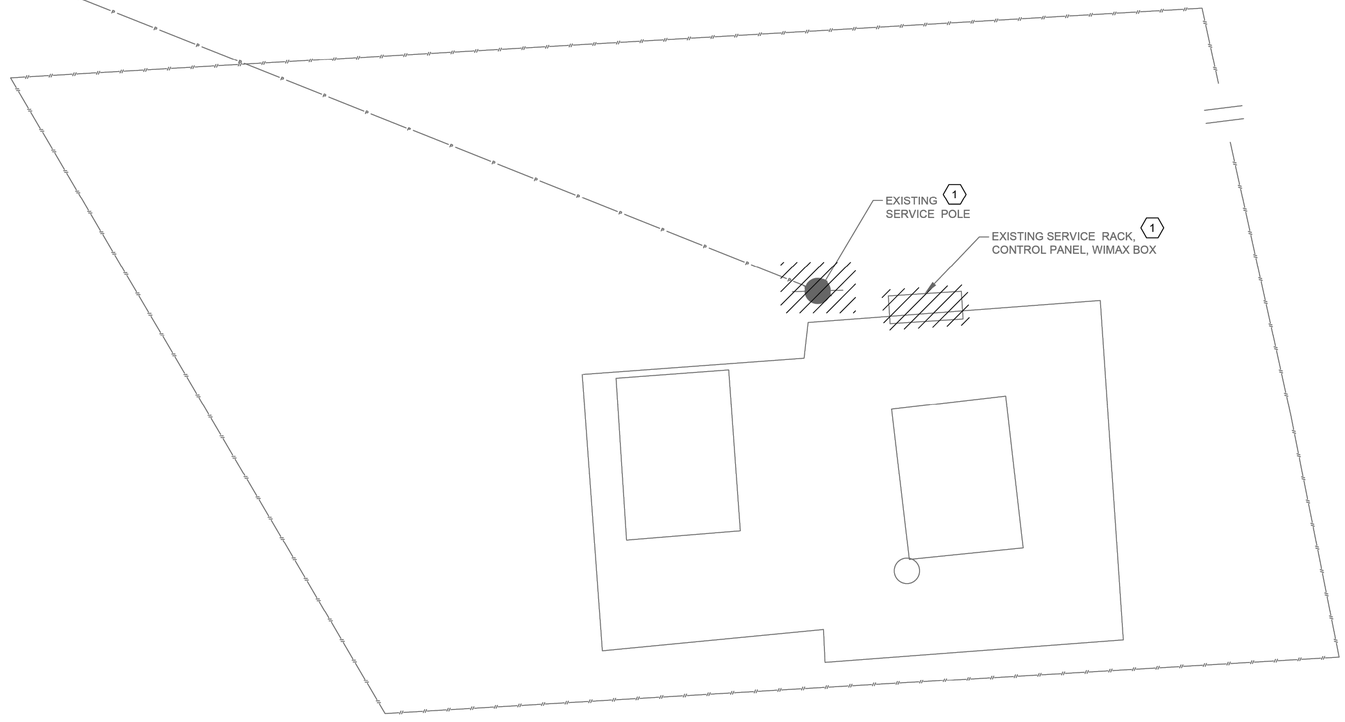

MUD #67 ELECTRICAL
EXISTING SITE
PLAN
1"= 3'-0"

NO.	DATE	REVISION	APP.

FOR INTERIM REVIEW
ONLY NOT INTENDED FOR
PERMIT, BIDDING OR
CONSTRUCTION PURPOSES.
ENGINEER:
HOSS FOROUZAN
P.E. SERIAL NO.77748
12/15/2025

GAI
Gupta & Associates, Inc.
CONSULTING ENGINEERING
Registration No. F-2593
302 Dennis St.,
Houston, Texas 77006
Tel: 713-636-2936
Fax: 713-636-2987
email: hforouzan@gaiconsulting.com

IDS Engineering Group
13430 NW. Freeway
Suite 700
Houston, Tx. 77040
713.462.3178
TxEng Firm 2726
TxSurv Firm 10110700

CITY OF HOUSTON
HOUSTON PUBLIC WORKS

LIFT STATION RENEWAL
AND REPLACEMENT FY 2023

MUD NO.67 LIFT STATION EXISTING SITE PLAN

WBS NUMBER	FOR CITY OF HOUSTON USE ONLY
R-000267-0179-4	
DRAWING SCALE	
HORIZ: VERT:	
CITY OF HOUSTON PM	
NAWARAJ PANTA, P.E.	
SHEET NO. 205 OF 321	

DWG. NO.
MUD–E–1

IDS JOB No. 0057-085-00

FILE PATH: O:\H8108_Lift Station Rehabilitation And Reconstruction (IDS)\6 Drawings\Electrical\Working\MUD #67\H8108_MUD–E–01.dwg

PLOTTED: 12/11/2025 8:30 PM

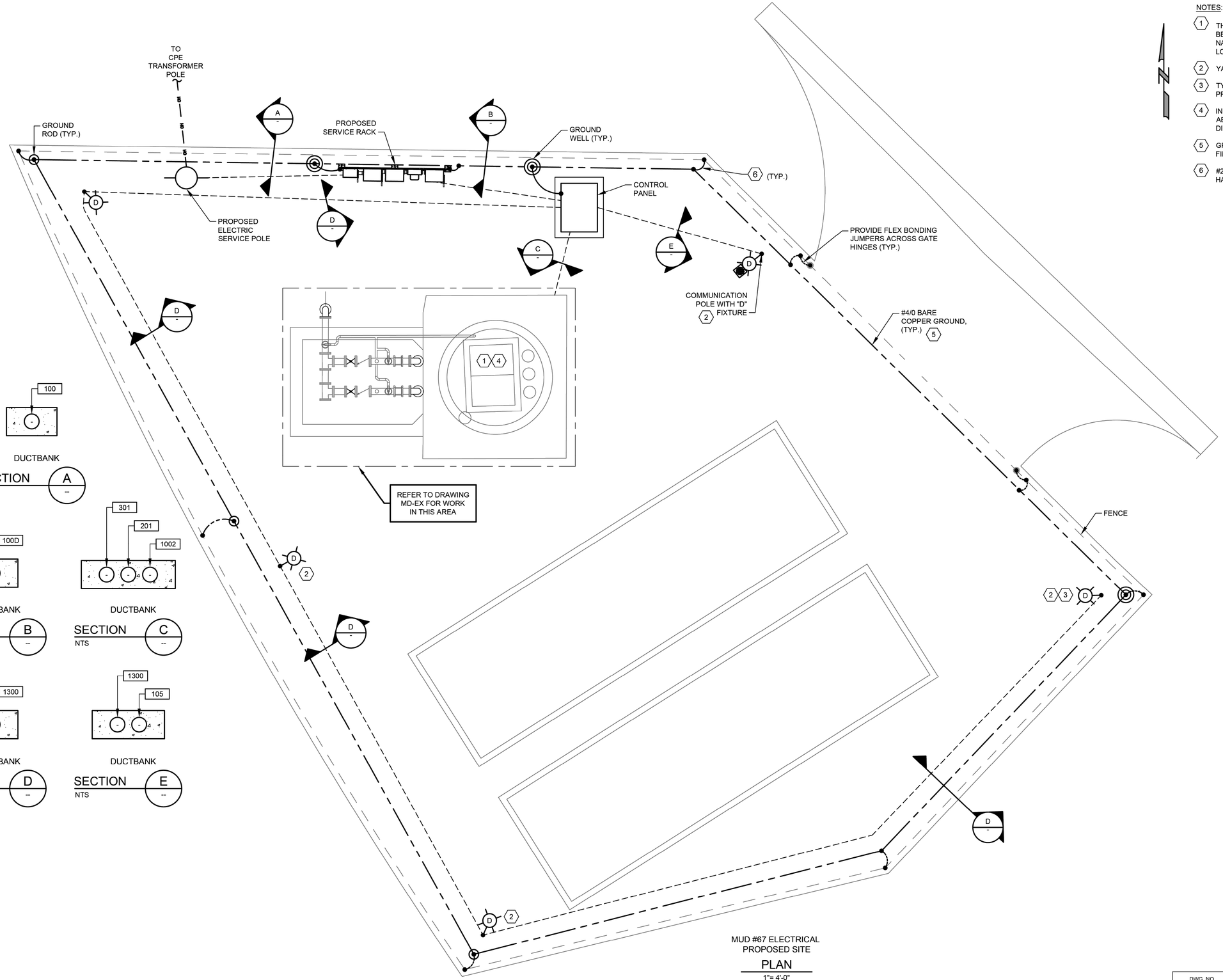

DUCTBANK SECTION A NTS

DUCTBANK SECTION B NTS

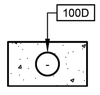

DUCTBANK SECTION C NTS

DUCTBANK SECTION D NTS

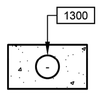

DUCTBANK SECTION E NTS

MUD #67 ELECTRICAL PROPOSED SITE PLAN
1"= 4'-0"

NOTES:

1. THE ELECTRICAL INSTALLATION IN THE WET WELL SHALL BE EXPLOSION PROOF, IN ACCORDANCE WITH THE NATIONAL ELECTRICAL CODE FOR CLASS I, DIVISION 1 LOCATIONS.
2. YARD LIGHT CONTROLLED BY LIGHTING SWITCH.
3. TYPE "B" FIXTURE TO BE INSTALLED ON THE POLE PROVIDING WIRES FOR THE "B" LIGHT.
4. INSIDE WETWELL RATED NEMA CLASS , DIV. 1, OUTSIDE ABOVE GROUND, AROUND WETWELL RATED CLASS 1, DIV. 2 ACCORDING TO NFPA 820.
5. GROUNDING LOOP SHALL BE BURIED 30" BELOW FINISHED GRADE.
6. #2/0 BARE COPPER GROUND TO BE BONDED TO HANDRAIL.

NO.	DATE	REVISION	APP.

FOR INTERIM REVIEW
ONLY NOT INTENDED FOR
PERMIT, BIDDING OR
CONSTRUCTION PURPOSES.
ENGINEER:
HOSS FOROUZAN
P.E. SERIAL NO.77748
12/15/2025

GAI
Gupta & Associates, Inc.
CONSULTING ENGINEERING
Registration No. F-2593
302 Dennis St.,
Houston, Texas 77006
Tel: 713-636-2936
Fax: 713-636-2987
email: hforouzan@gaiconsulting.com

IDS Engineering Group
13430 NW. Freeway
Suite 700
Houston, Tx. 77040
713.462.3178
TxEng Firm 2726
TxSurv Firm 10110700

CITY OF HOUSTON
HOUSTON PUBLIC WORKS

LIFT STATION RENEWAL
AND REPLACEMENT FY 2023

MUD NO.67 LIFT STATION PROPOSED SITE PLAN

WBS NUMBER	FOR CITY OF HOUSTON USE ONLY
R-000267-0179-4	
DRAWING SCALE	
HORIZ: VERT:	
CITY OF HOUSTON PM	
NAWARAJ PANTA, P.E.	
SHEET NO. 206 OF 321	

DWG. NO. MUD-E-2

IDS JOB No. 0057-085-00

FILE PATH: O:\H8108_Lift Station Rehabilitation And Reconstruction (IDS)\6 Drawings\Electrical\Working\MUD #67\H8108_MUD-E-02.dwg

PLOTTED: 12/11/2025 8:30 PM

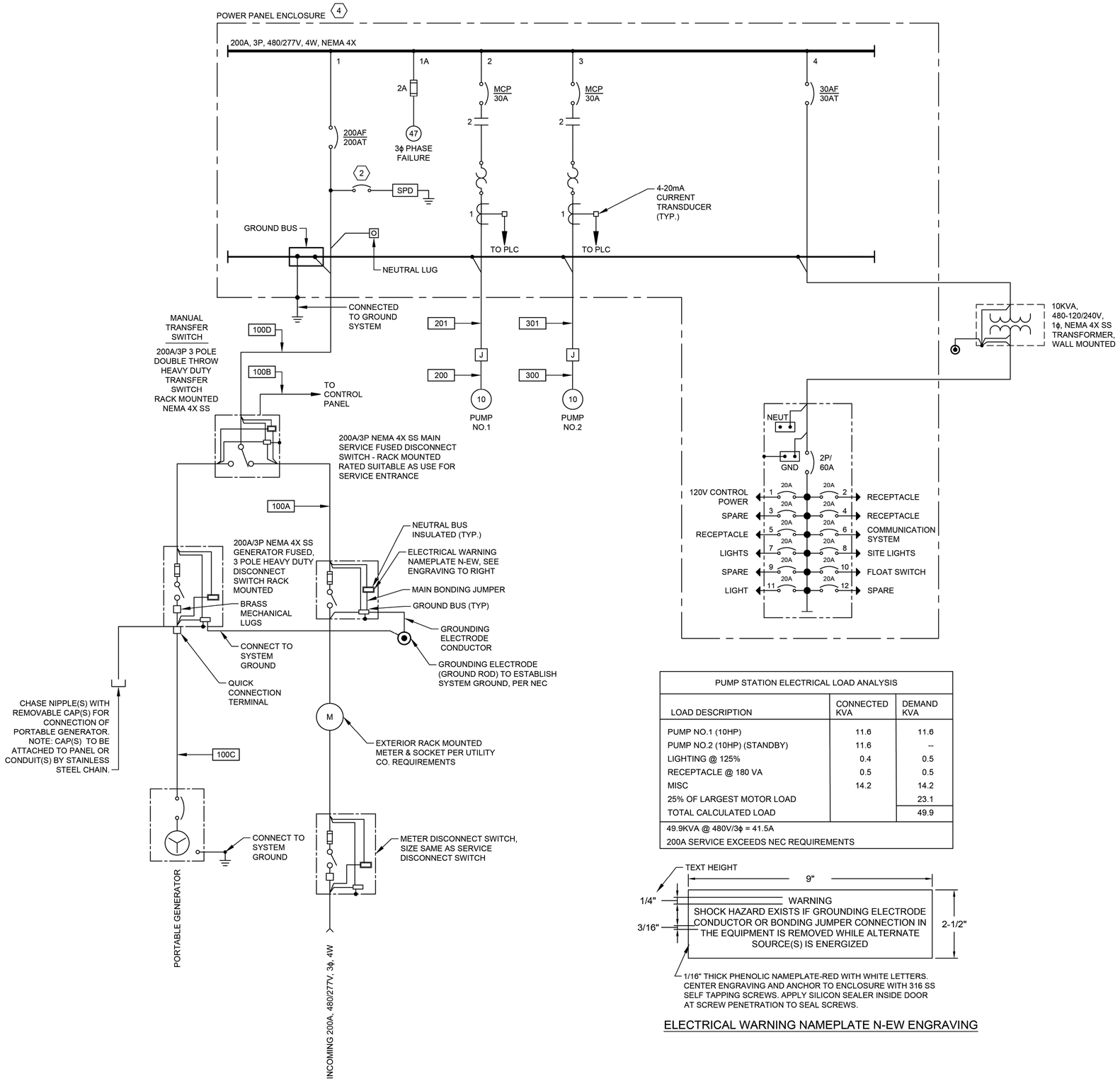

NOTES:

1. PROVIDE A NORMALLY OPEN (NO) AUXILIARY CONTACT ON BOTH ON POSITIONS.
2. PROVIDE BREAKER ACCORDING TO MANUFACTURER'S REQUIREMENTS.
3. POINT TO POINT METHOD IS USED FOR SHORT CIRCUIT CURRENT CALCULATION.
4. CONTRACTOR SHALL PROVIDE A PERMANENTLY AFFIXED LABEL (2" X 3"0 SHOWING THE AVAILABLE FAULT CURRENT AND CALCULATION DATE. THE LABEL SHALL BE BLUE LETTERING ON A CONTRASTING BACKGROUND.
5. THE INSULATION TYPES OF ALL ELECTRICAL CONDUCTORS USED IN THE PROJECT HAVE BEEN SPECIFIED IN ELECTRICAL SPECIFICATIONS (16120, 16121, AND 16122). THE TYPES OF CONDUITS USED IN THE PROJECT HAS BEEN SPECIFIED IN ELECTRICAL SPECIFICATIONS 16111.

PUMP STATION ELECTRICAL LOAD ANALYSIS		
LOAD DESCRIPTION	CONNECTED KVA	DEMAND KVA
PUMP NO.1 (10HP)	11.6	11.6
PUMP NO.2 (10HP) (STANDBY)	11.6	--
LIGHTING @ 125%	0.4	0.5
RECEPTACLE @ 180 VA	0.5	0.5
MISC	14.2	14.2
25% OF LARGEST MOTOR LOAD		23.1
TOTAL CALCULATED LOAD		49.9
49.9KVA @ 480V/3ϕ = 41.5A		
200A SERVICE EXCEEDS NEC REQUIREMENTS		

1/16" THICK PHENOLIC NAMEPLATE-RED WITH WHITE LETTERS. CENTER ENGRAVING AND ANCHOR TO ENCLOSURE WITH 316 SS SELF TAPPING SCREWS. APPLY SILICON SEALER INSIDE DOOR AT SCREW PENETRATION TO SEAL SCREWS.

ELECTRICAL WARNING NAMEPLATE N-EW ENGRAVING

NO.	DATE	REVISION	APP.

FOR INTERIM REVIEW ONLY NOT INTENDED FOR PERMIT, BIDDING OR CONSTRUCTION PURPOSES.
ENGINEER:
HOSS FOROUZAN
P.E. SERIAL NO.77748
12/15/2025

GAI
Gupta & Associates, Inc.
CONSULTING ENGINEERING
Registration No. F-2593
302 Dennis St.,
Houston, Texas 77006
Tel: 713-636-2936
Fax: 713-636-2987
email: hforouzan@gaiconsulting.com

IDS Engineering Group
13430 NW. Freeway
Suite 700
Houston, Tx. 77040
713.462.3178
TxEng Firm 2726
TxSurv Firm 10110700

CITY OF HOUSTON
HOUSTON PUBLIC WORKS

LIFT STATION RENEWAL AND REPLACEMENT FY 2023

MUD NO.67 LIFT STATION SINGLE-LINE DIAGRAM

WBS NUMBER	FOR CITY OF HOUSTON USE ONLY
R-000267-0179-4	
DRAWING SCALE	
HORIZ: VERT:	
CITY OF HOUSTON PM	
NAWARAJ PANTA, P.E.	
SHEET NO. 207 OF 321	

DWG. NO. MUD-E-3

IDS JOB No. 0057-085-00

FILE PATH: O:\H8108_Lift Station Rehabilitation And Reconstruction (IDS)\6 Drawings\Electrical\Working\MUD #67\H8108_MUD-E-03.dwg

PLOTTED: 12/11/2025 8:31 PM

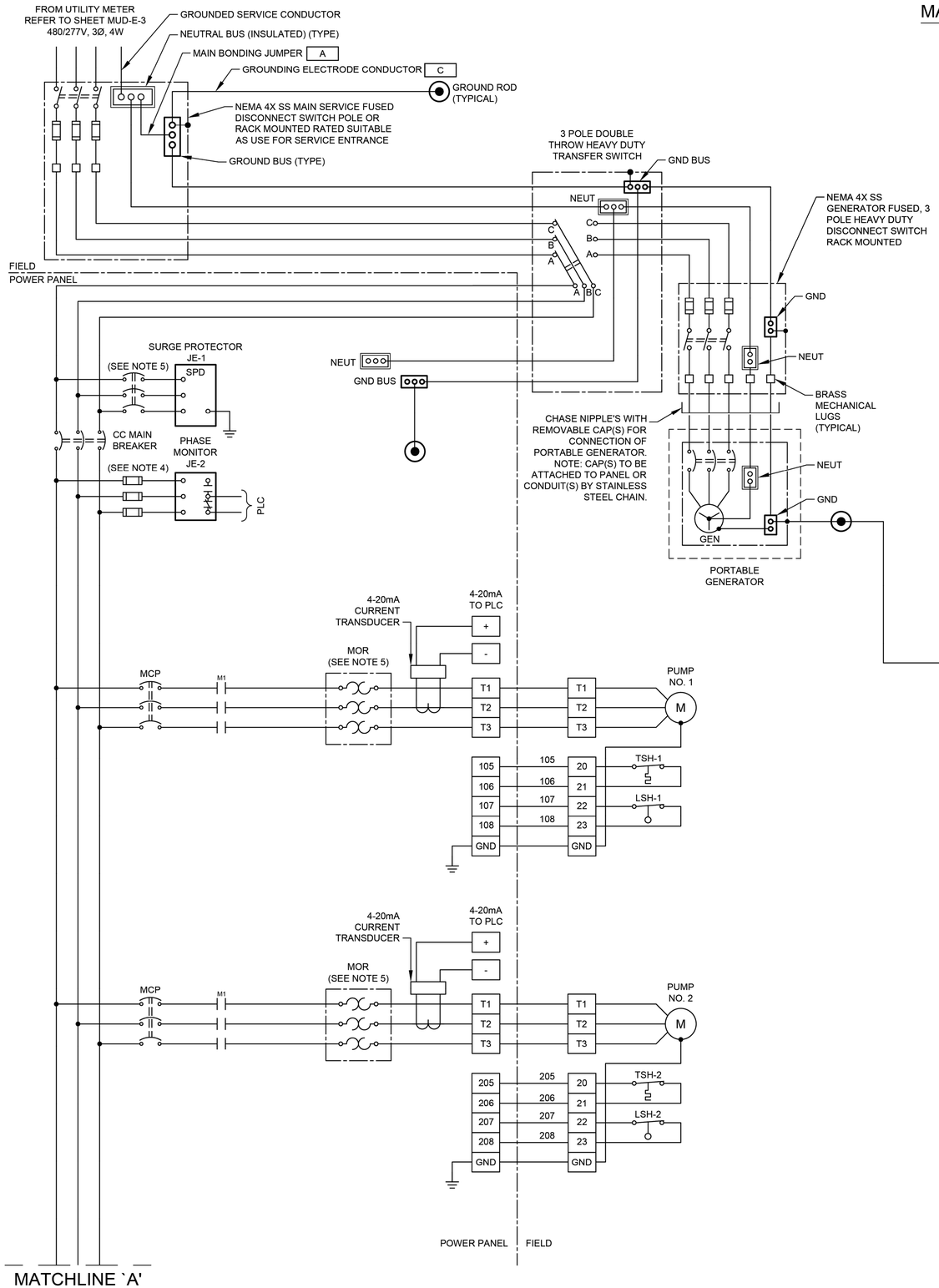

MATCHLINE `A'

POWER PANEL | FIELD

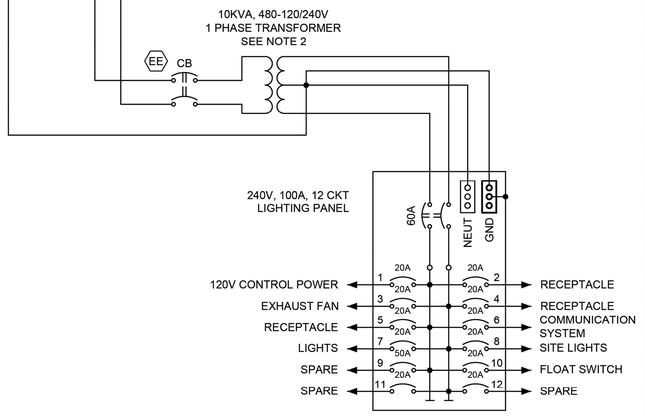

POWER WIRING DIAGRAM
NTS

NOTES:

1. UNLESS OTHERWISE INDICATED, ALL DEVICES WITHOUT FURTHER DESIGNATION ARE LOCATED AT THE MOTOR CONTROL CENTER (MCC).
2. CONTRACTOR TO REVISE DWG. BASED ON MANUFACTURE AND SIZE.
3. CONTRACTOR SHALL TERMINATE POWER & CONTROL WIRES PER MANUFACTURER'S REQUIREMENTS.
4. PROVIDE FUSE SIZE ACCORDING TO MANUFACTURER'S REQUIREMENTS.
5. PROVIDE BREAKER SIZE ACCORDING TO MANUFACTURER'S REQUIREMENTS.
6. THE COMBINATION OF CT AND MOTOR OVERLOAD RELAY IF REQUIRED.

NO.	DATE	REVISION	APP.

FOR INTERIM REVIEW
ONLY NOT INTENDED FOR
PERMIT, BIDDING OR
CONSTRUCTION PURPOSES.
ENGINEER:
HOSS FOROUZAN
P.E. SERIAL NO.77748
12/15/2025

GAI
Gupta & Associates, Inc.
CONSULTING ENGINEERING
Registration No. F-2593
302 Dennis St.,
Houston, Texas 77006
Tel: 713-636-2936
Fax: 713-636-2987
email: hforouzan@gaiconsulting.com

IDS Engineering Group
13430 NW. Freeway
Suite 700
Houston, Tx. 77040
713.462.3178
TxEng Firm 2726
TxSurv Firm 10110700

CITY OF HOUSTON
HOUSTON PUBLIC WORKS

LIFT STATION RENEWAL AND REPLACEMENT FY 2023

MUD NO.67 LIFT STATION THREE-LINE DIAGRAM

WBS NUMBER	FOR CITY OF HOUSTON USE ONLY
R-000267-0179-4	
DRAWING SCALE	
HORIZ: VERT:	
CITY OF HOUSTON PM	
NAWARAJ PANTA, P.E.	
SHEET NO. 208 OF 321	

DWG. NO. MUD-E-4

IDS JOB No. 0057-085-00

FILE PATH: O:\H8108_Lift Station Rehabilitation And Reconstruction (IDS)\6 Drawings\Electrical\Working\MUD #67\H8108_MUD-E-04.dwg

PLOTTED: 12/11/2025 8:31 PM

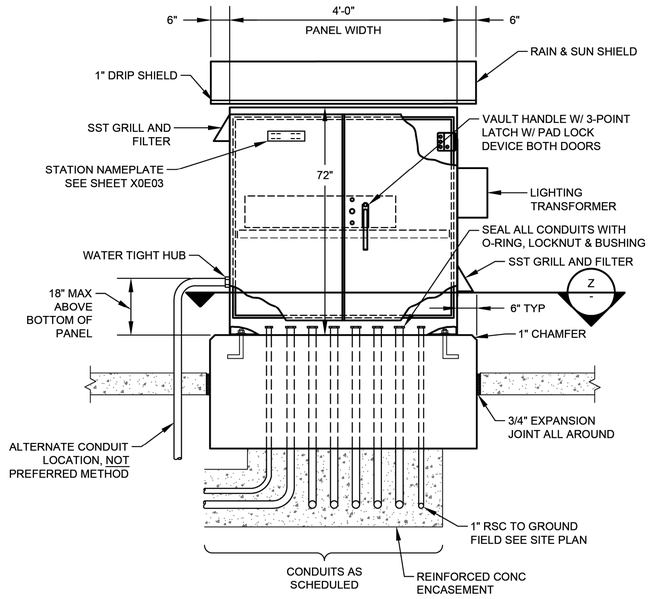

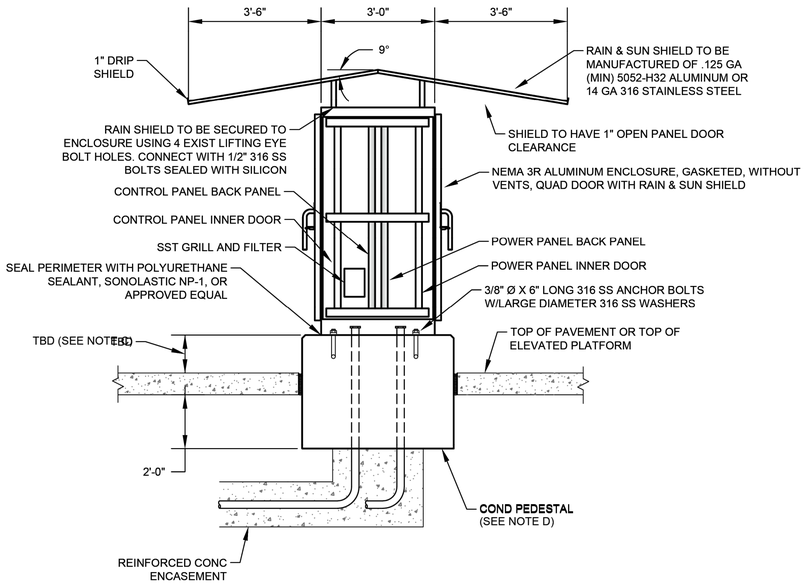

CONTROL CABINET ENCLOSURE WITH CONCRETE PEDESTAL FOUNDATION

(SEE NOTE 6)

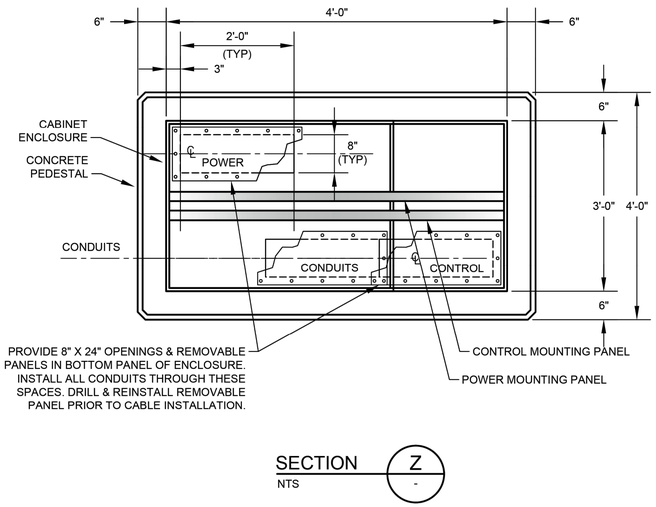

SECTION Z
NTS

NOTES:

1. SEE SHEET MUD-I-4 FOR EQUIPMENT SCHEDULE.
2. REFER TO SPEC 13325-8 FOR PANEL DIMENSIONS.
3. EXPANSION JOINT FITTINGS AS REQUIRED.
4. REFER TO SERVICE RACK FOR DETAIL.
5. REFER TO STRUCTURAL DRAWINGS .

NO.	DATE	REVISION	APP.

FOR INTERIM REVIEW
ONLY NOT INTENDED FOR
PERMIT, BIDDING OR
CONSTRUCTION PURPOSES.
ENGINEER:
HOSS FOROUZAN
P.E. SERIAL NO.77748
12/15/2025

GAI
Gupta & Associates, Inc
CONSULTING ENGINEERING
Registration No. F-2593
302 Dennis St.,
Houston, Texas 77006
Tel: 713-636-2936
Fax: 713-636-2987
email: hforouzan@gaiconsulting.com

IDS Engineering Group
13430 NW. Freeway
Suite 700
Houston, Tx. 77040
713.462.3178
TxEng Firm 2726
TxSurv Firm 10110700

CITY OF HOUSTON
HOUSTON PUBLIC WORKS

LIFT STATION RENEWAL
AND REPLACEMENT FY 2023

MUD NO.67 LIFT STATION CONTROL CABINET ENCLOSURE DETAIL

WBS NUMBER	FOR CITY OF HOUSTON USE ONLY
R-000267-0179-4	
DRAWING SCALE	
HORIZ: VERT:	
CITY OF HOUSTON PM	
NAWARAJ PANTA, P.E.	
SHEET NO. 209 OF 321	

DWG. NO. MUD-E-5

IDS JOB No. 0057-085-00

FILE PATH: O:\H8108_Lift Station Rehabilitation And Reconstruction (IDS)\6 Drawings\Electrical\Working\MUD #67\H8108_MUD-E-05.dwg

PLOTTED: 12/11/2025 8:31 PM

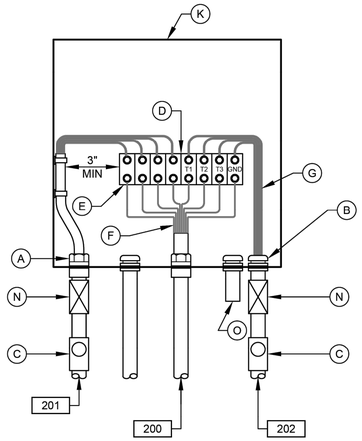

PUMP NO.1
JUNCTION BOX

DETAIL 3
NTS
(SEE NOTE 7)

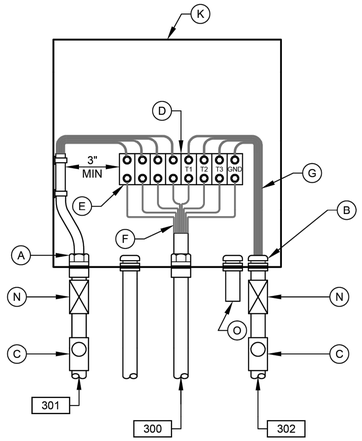

PUMP NO.2
JUNCTION BOX

DETAIL 4
NTS
(SEE NOTE 7)

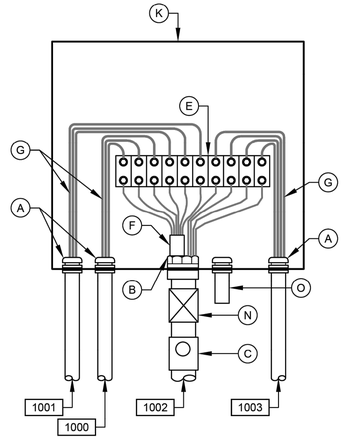

LEVEL TRANSMITTER
JUNCTION BOX

DETAIL 5
NTS
(SEE NOTE 7)

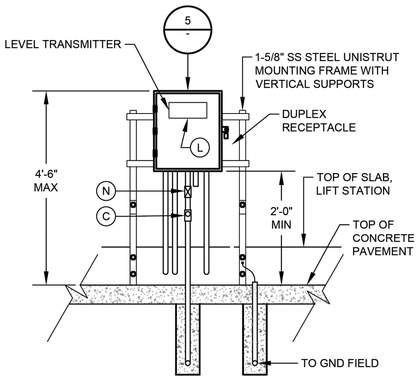

DETAIL 6
NTS
(SEE NOTE 9 & 12)

TYP SIDE VIEW FOR DETAIL 1, 2, & 6

(SEE NOTE 10)

DETAIL 1
NTS
(SEE NOTE 9 & 12)

DETAIL 2
NTS
(SEE NOTE 9 & 12)

JUNCTION BOX EQUIPMENT SCHEDULE

- A - OZ GEDNEY CSBE SEAL
- B - WATERTIGHT CONDUIT HUB WITH INSULATED BUSHING
- C - CLASS I, DIV 1, EXPLOSION PROOF SEAL INSTALLED PER NEC DIV 501
- D - POWER TERMINAL BLOCK W/SCREW DOWN BOX LUGS
- E - CONTROL TERM BLOCK W/SCREW DOWN BOX LUGS
- F - MULTI-CONDUCTOR CABLE, REMOVE OUTER JACKET AS SHOWN
- G - WIRING AS SCHEDULED
- H - NOT USED.
- I - NOT USED.
- J - NOT USED
- K - NEMA 6P STAINLESS STEEL JUNCTION BOX WITH GASKETED FRONT COVER, SINGLE QUARTER TURN, OIL-TIGHT LATCH AND PADLOCKING PROVISIONS, MINIMUM SIZE: 12"W X 16"H X 6"D
- L - NAMEPLATE, SEE SPECIFICATIONES (SEE NAMEPLATE SCHEDULE)
- M - NOT USED.
- N - EXPANSION FITTING
- O - DRAIN VENT

NOTES:

1. NAMEPLATES SHALL BE MOUNTED TO JUNCTION BOXES USING 316 STAINLESS STEEL HARDWARE.
2. MAINTAIN MINIMUM SEPARATION REQUIRED UNDER NEC ARTICLE 504, BETWEEN INTRINSICALLY SAFE CONTROL WIRING AND NON INTRINSICALLY SAFE MOTOR FEEDER WIRING.
3. UNLESS OTHERWISE NOTED, ALL EXTERIOR EXPOSED CONDUITS SHALL BE PVC COATED ALUMINUM.
4. UNLESS OTHERWISE NOTED, ALL NUTS, BOLTS, SCREWS WASHERS, ETC SHALL BE TYPE 316 STAINLESS STEEL.
5. ALL UNDERGROUND CONDUITS TO BE ENCASED IN REINFORCED CONCRETE DUCTBANK.
6. PROVIDE ANTI-CORROSIVE SPRAY ON ANY BARE METAL PARTS OR EXPOSED WIRE.
7. SEE WIRING SCHEMATICS FOR TERMINALS AND WIRE NUMBERS.
8. ANY CONDUIT REQUIRING A CSBE SEAL, SHALL BE A MINIMUM SIZE OF 2 1/2" PER CABLE.
9. DETAIL SHOWN MAY BE MODIFIED PER SITE SITUATION.
10. COORDINATE WITH WASTE WATER OPERATIONS ELECTRICAL ORGANIZATION FOR THE OPENING OF JUNCTION BOXES TO THE SIDE OF WET WELL IF REQUIRED DURING CONSTRUCTION.
11. THE ENCLOSURES WITH ELECTRICAL CIRCUITS SHALL BE A MINIMUM OF 5 FEET FROM ANY CLASSIFIED AREA, OTHERWISE EXPLOSION PROOF TYPE ENCLOSURES SHALL BE USED.

NO.	DATE	REVISION	APP.

FOR INTERIM REVIEW
ONLY NOT INTENDED FOR
PERMIT, BIDDING OR
CONSTRUCTION PURPOSES.
ENGINEER:
HOSS FOROUZAN
P.E. SERIAL NO.77748
12/15/2025

GAI
Gupta & Associates, Inc.
CONSULTING ENGINEERING
Registration No. F-2593
302 Dennis St.,
Houston, Texas 77006
Tel: 713-636-2936
Fax: 713-636-2987
email: hforouzan@gaiconsulting.com

IDS Engineering Group
13430 NW. Freeway
Suite 700
Houston, Tx. 77040
713.462.3178
TxEng Firm 2726
TxSurv Firm 10110700

CITY OF HOUSTON
HOUSTON PUBLIC WORKS

LIFT STATION RENEWAL
AND REPLACEMENT FY 2023

MUD NO.67 LIFT STATION JUNCTION BOX DETAILS

WBS NUMBER	FOR CITY OF HOUSTON USE ONLY
R-000267-0179-4	
DRAWING SCALE	
HORIZ: VERT:	
CITY OF HOUSTON PM	
NAWARAJ PANTA, P.E.	
SHEET NO. 210 OF 321	

DWG. NO.
MUD–E–6

IDS JOB No. 0057-085-00

FILE PATH: O:\H8108_Lift Station Rehabilitation And Reconstruction (IDS)\6 Drawings\Electrical\Working\MUD #67\H8108_MUD–E–06.dwg

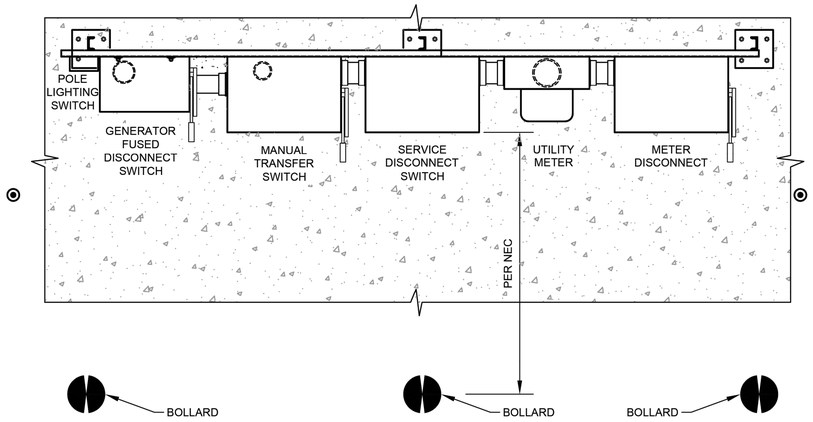

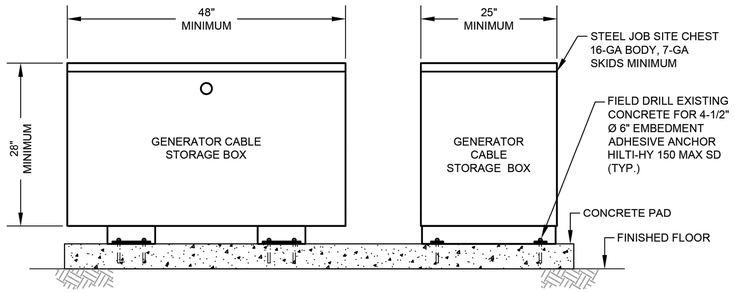

GENERATOR CABLE STORAGE BOX SIDE VIEW

DETAIL 20 NTS.

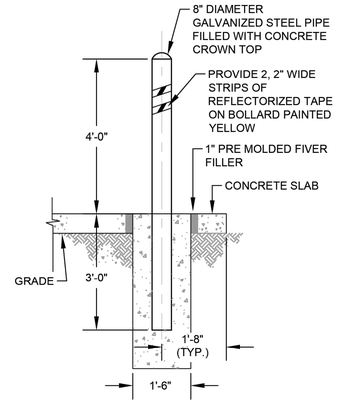

BOLLARD DETAIL

DETAIL 21 NTS.

ALLOWABLE DEVICE AMPACITY CHART DLO RHW-2 CAM-LOK CONNECTOR CABLE		
CABLE SIZE AWG	AMPS	CABLE LENGTH
#1	220	65 FEET
4/0	400	65 FEET

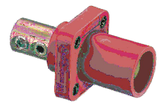

QUICK CONNECT FOR GENRATOR

PHOTOGRAPH 1 NTS.



QUICK CONNECT FOR GENRATOR

PHOTOGRAPH 2 NTS.

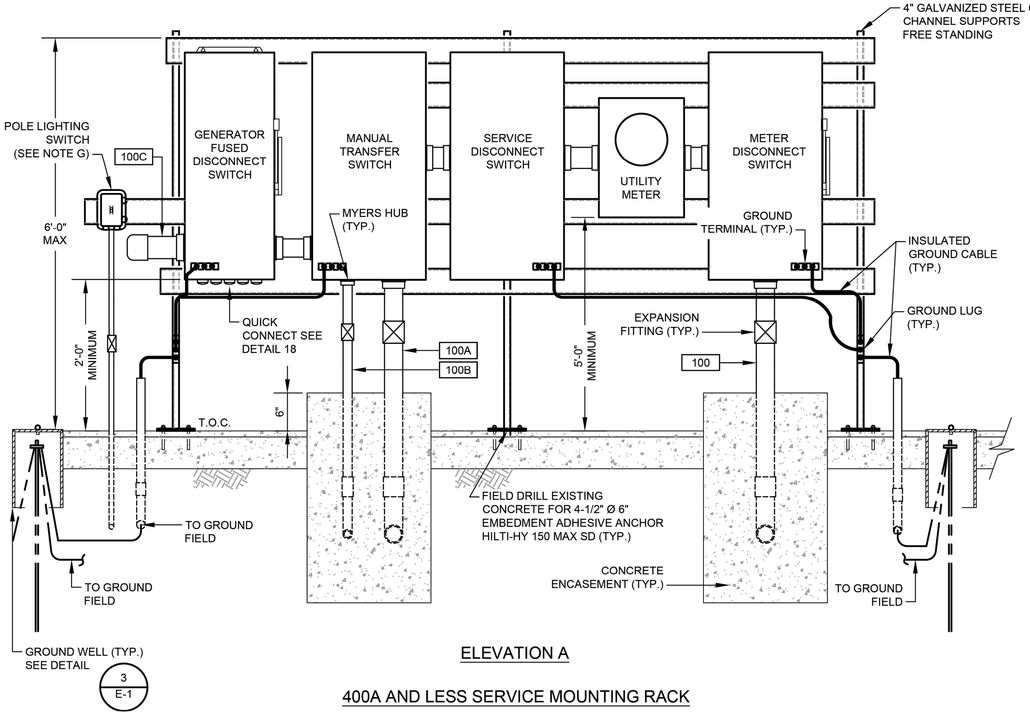

ELEVATION A

400A AND LESS SERVICE MOUNTING RACK

DETAIL 17 NTS.

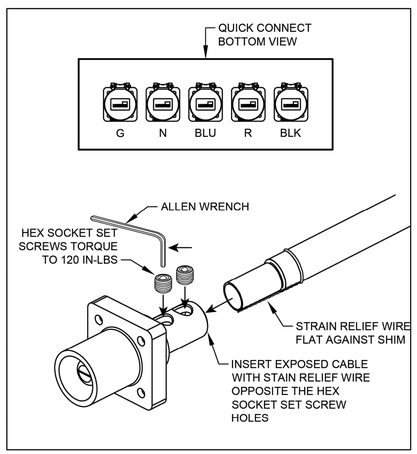

400A AND LESS FEMALE PLUG CABLE TERMINATION

DETAIL 18 NTS.

REFER TO PHOTO NO.1

NOTES:

1. CONTRACTOR TO INSTALL CONNECTORS AT BOTH ENDS OF CABLE.

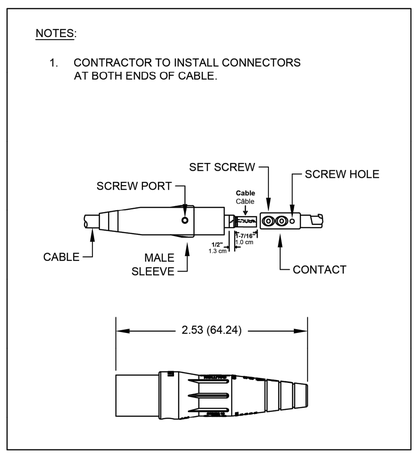

400A AND LESS MALE PLUG CABLE TERMINATION

DETAIL 19 NTS.

REFER TO PHOTO NO.2

NOTES:

1. CHASE NIPPLE(S) WITH REMOVABLE CAP(S) FOR CONNECTION OF PORTABLE GENERATOR. NOTE: CAP(S) TO BE ATTACHED TO PANEL OR CONDUIT(S) BY STAINLESS STEEL CHAIN.
2. T.O.C DEFINED AS TOP OF PAVEMENT OR TOP OF PANEL ENCLOSURE PEDESTAL WHICHEVER IS HIGHER. (SEE NOTE B).
3. PROVIDE CENTER BOLLARD WHEN SPACE BETWEEN OUTSIDE BOLLARDS IS GREATER THEN 4'-0".

FOR INTERIM REVIEW ONLY NOT INTENDED FOR PERMIT, BIDDING OR CONSTRUCTION PURPOSES.
ENGINEER:
HOSS FOROUZAN
P.E. SERIAL NO.77748
12/15/2025

GAI Gupta & Associates, Inc.
CONSULTING ENGINEERING
Registration No. F-2593
302 Dennis St.,
Houston, Texas 77006
Tel: 713-636-2936
Fax: 713-636-2987
email: hforouzan@gaiconsulting.com

IDS Engineering Group
13430 NW. Freeway
Suite 700
Houston, Tx. 77040
713.462.3178
TxEng Firm 2726
TxSurv Firm 10110700

CITY OF HOUSTON
HOUSTON PUBLIC WORKS

LIFT STATION RENEWAL AND REPLACEMENT FY 2023

MUD NO.67 LIFT STATION SERVICE RACK DETAIL

WBS NUMBER	FOR CITY OF HOUSTON USE ONLY
R-000267-0179-4	
DRAWING SCALE	
HORIZ: VERT:	
CITY OF HOUSTON PM	
NAWARAJ PANTA, P.E.	

DWG. NO. MUD–E–7

SHEET NO. 211 OF 321

IDS JOB No. 0057-085-00

NO.	DATE	REVISION	APP.

PLOTTED: 12/11/2025 8:31 PM

FILE PATH: O:\H8108_Lift Station Rehabilitation And Reconstruction (IDS)\6 Drawings\Electrical\Working\MUD #67\H8108_MUD–E–07.dwg

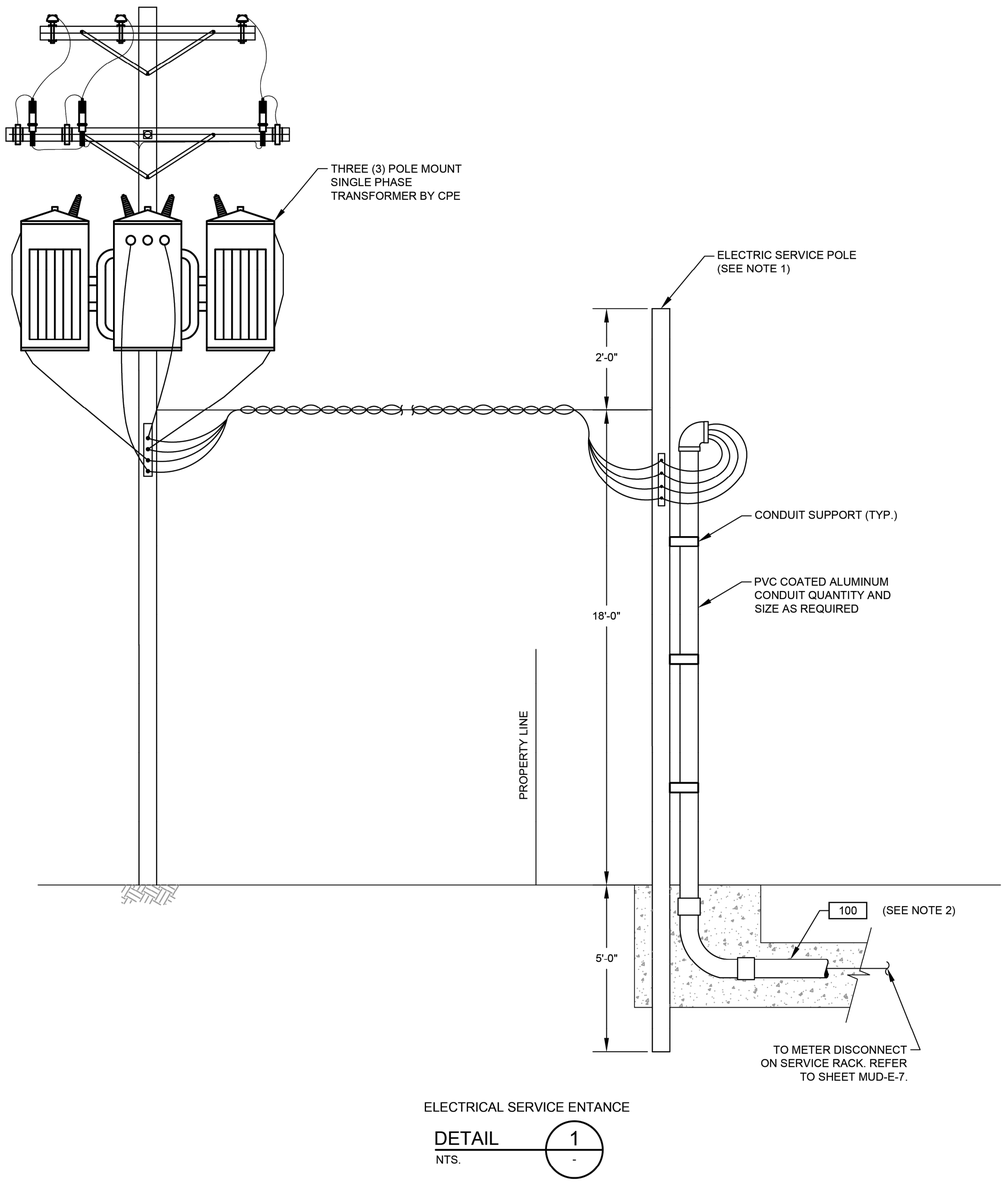

ELECTRICAL SERVICE ENTANCE

DETAIL 1
NTS. -

NO.	DATE	REVISION	APP.

FOR INTERIM REVIEW
ONLY NOT INTENDED FOR
PERMIT, BIDDING OR
CONSTRUCTION PURPOSES.
ENGINEER:
HOSS FOROUZAN
P.E. SERIAL NO.77748
12/15/2025

GAI
Gupta & Associates, Inc.
CONSULTING ENGINEERING
Registration No. F-2593
302 Dennis St.,
Houston, Texas 77006
Tel: 713-636-2936
Fax: 713-636-2987
email: hforouzan@gaiconsulting.com

IDS Engineering Group
13430 NW. Freeway
Suite 700
Houston, Tx. 77040
713.462.3178
TxEng Firm 2726
TxSurv Firm 10110700

CITY OF HOUSTON
HOUSTON PUBLIC WORKS

LIFT STATION RENEWAL
AND REPLACEMENT FY 2023

MUD NO.67 LIFT STATION SERVICE POLE DETAIL

WBS NUMBER	FOR CITY OF HOUSTON USE ONLY
R-000267-0179-4	
DRAWING SCALE	
HORIZ: VERT:	
CITY OF HOUSTON PM	
NAWARAJ PANTA, P.E.	
SHEET NO. 212 OF 321	

DWG. NO. MUD-E-8

IDS JOB No. 0057-085-00

PLOTTED: 12/11/2025 8:31 PM

FILE PATH: O:\H8108_Lift Station Rehabilitation And Reconstruction (IDS)\6 Drawings\Electrical\Working\MUD #67\H8108_MUD-E-08.dwg

	DESCRIPTION	SERVICE		ROUTING			CONDUIT & WIRE SIZE
		VOLTAGE	AMPS OR HP	FROM	TO	VIA	
A	MAIN BONDING JUMPER	--	--	MAIN FUSED DISCONNECT NEUTRAL	MAIN FUSED DISCONNECT GROUND	--	#4 CU GND.
B	EQUIPMENT BONDING JUMPER	--	--	MCC/POWER PANEL ENCLOSURE	POWER/CONTROL PANEL & EQUIPMENT	--	#4 CU GND.
C	GROUNDED ELECTRODE CONDUCTOR	--	--	GROUNDING ELECTRODE	MAIN SERVICE FUSED DISCONNECT GROUNDING	--	#4 CU GND.
100	SERVICE ENTRANCE	480V	200A	UTILITY POWER SERVICE	METER DISCONNECT	--	3 #3/0 AWG., #4 NEUT. #3 GND., 2-1/2" C.
100A	UTILITY POWER ENTRANCE	480V	200A	SERVICE DISCONNECT SWITCH	ATS	--	3 #3/0 AWG., #4 NEUT. #3 GND., 2-1/2" C.
100B	NORMAL/EMERGENCY POWER STATUS	24VDC	--	STANDBY GENERATOR	ATS	--	4#14 AWG., #14 GND., 3/4"C.
100C	EMERGENCY POWER	480V	200A	GENERATOR DISCONNECT	PORTABLE GENERATOR	GAPPED CONDUIT	--
100D	MCC POWER	480V	--	MTS	CONTROL PANEL	--	3 #3/0 AWG., #6 NEUT. #6 GND., 2-1/2" C.
101	GROUND ELECTRODE CONDUCTOR	--	--	MCC ENCLOSURE	GROUND FIELD	--	#6 CU GND.
104	GROUND ELECTRODE CONDUCTOR	--	--	CONTROL PANEL	GROUND FIELD	--	#6 CU GND.
105	COMMUNICATION	--	--	COMMUNICATION POLE	CONTROL PANEL	--	1-1/2"C. CAT 5E
200	PUMP NO. 1 POWER	480V	10 HP	PUMP NO. 1	PUMP NO. 1 JUNCTION BOX	--	MANUFACTURER CABLE IN 2-1/2"C.
201	PUMP NO. 1 CONTROLS	120V	--	PUMP NO. 1	PUMP NO. 1 JUNCTION BOX	--	MANUFACTURER CABLE IN 2-1/2"C.
202	PUMP NO. 1 POWER	480V	10 HP	PUMP NO. 1 JUNCTION BOX	PUMP STARTER	--	3#10, #10 GND., 4#14., 2"C.
300	PUMP NO. 2 POWER	480V	10 HP	PUMP NO. 2	PUMP NO. 2 JUNCTION BOX	--	MANUFACTURER CABLE IN 2-1/2"C.
301	PUMP NO. 2 CONTROLS	120V	--	PUMP NO. 2	PUMP NO. 2 JUNCTION BOX	--	MANUFACTURER CABLE IN 2-1/2"C.
302	PUMP NO. 2 POWER	480V	10 HP	PUMP NO. 2 JUNCTION BOX	PUMP STARTER	--	3#10, #10 GND., 4#14, 2"C.
600	LIGHTING PANEL FEEDER	480V	30A	MOTOR CONTROL CENTER	LIGHTING TRANSFORMER	--	2#6, #6 GND., 1"C.
601	LIGHTING PANEL GROUND	--	--	LIGHTING PANEL	GROUND FIELD	--	#8 GND., 1"C.
602	LIGHTING PANEL FEEDER	120/240V	--	LIGHTING TRANSFORMER	LIGHTING PANEL	--	3#4, #6 GND., 1-1/4" C.
900	INTRUSION ALARM	24VDC	--	MOTION SWITCH	CONTROL PANEL	--	2#14, 3/4" C.
1000	LEVEL TRANSMITTER	24VDC	--	TRANSMITTER JUNCTION BOX	TRANSMITTER JUNCTION BOX	--	MANUFACTURER'S CABLE IN 2-1/2"C
1001	LEVEL TRANSMITTER	24VDC	--	TRANSMITTER JUNCTION BOX	TRANSMITTER JUNCTION BOX	--	MANUFACTURER'S CABLE IN 2-1/2"C
1002	COMBINED LEVEL TRANSMITTERS & FLOAT SWITCH	24VDC	--	CONTROL PANEL	TRANSMITTER JUNCTION BOX	--	2-TRI, 4#14, 2" C.
1003	WELL FLOAT SWITCHES	24VDC	--	TRANSMITTER JUNCTION BOX	FLOAT SWITCH NO.1 & NO.2	--	MANUFACTURER'S CABLE IN 2-1/2"C
1100	120VAC FOR RECEPTACLE	-	--	LIGHTING PANEL	RECEPTACLE NEXT TO TRANSMITTER J-BOX	--	2#12, #12G, 1" C.
1200	120VAC FOR RECEPTACLE	-	--	LIGHTING PANEL	RECEPTACLE NEXT TO PUMP NO.2 J-BOX	--	2#12, #12G, 1" C.
1300	SITE LIGHTING	120V	--	LIGHTING PANEL	SITE LIGHTING SWITCH	--	2#12 AWG., #12 GND., 1"C.

NO.	DATE	REVISION	APP.

FOR INTERIM REVIEW
ONLY NOT INTENDED FOR
PERMIT, BIDDING OR
CONSTRUCTION PURPOSES.
ENGINEER:
HOSS FOROUZAN
P.E. SERIAL NO.77748
12/15/2025

GAI
Gupta & Associates, Inc.
CONSULTING ENGINEERING
Registration No. F-2593
302 Dennis St.,
Houston, Texas 77006
Tel: 713-636-2936
Fax: 713-636-2987
email: hforouzan@gaiconsulting.com

IDS Engineering Group
13430 NW. Freeway
Suite 700
Houston, Tx. 77040
713.462.3178
TxEng Firm 2726
TxSurv Firm 10110700

CITY OF HOUSTON
HOUSTON PUBLIC WORKS

LIFT STATION RENEWAL
AND REPLACEMENT FY 2023

MUD NO.67 LIFT STATION CONDUIT SCHEDULE

WBS NUMBER	FOR CITY OF HOUSTON USE ONLY
R-000267-0179-4	
DRAWING SCALE	
HORIZ: VERT:	
CITY OF HOUSTON PM	
NAWARAJ PANTA, P.E.	
SHEET NO. 213 OF 321	

DWG. NO. MUD-E-9

IDS JOB No. 0057-085-00

PLOTTED: 12/11/2025 8:31 PM

FILE PATH: O:\H8108_Lift Station Rehabilitation And Reconstruction (IDS)\6 Drawings\Electrical\Working\MUD #67\H8108_MUD-E-09.dwg

PLOTTED: 12/11/2025 8:14 PM

HMI

INFLUENT PUMP NO. 1: SEAL FAIL ALARM MA 1; MOTOR OVERLOAD ALARM MO 1; MOTOR CURRENT II 1; HIGH TEMP ALARM TH 1; IN HAND HI 1; IN AUTO IA 1; ON/OFF YFS 1; START/STOP YCS 1

INFLUENT PUMP NO. 2: SEAL FAIL ALARM MA 2; MOTOR OVERLOAD ALARM MO 2; MOTOR CURRENT II 2; HIGH TEMP ALARM TH 2; IN HAND HI 2; IN AUTO IA 2; ON/OFF YFS 2; START/STOP YCS 2

ALARMS RESET RE 1

PRIMARY PLC FLOAT HIGH-HIGH WETWELL LEVEL LAHH 1A

PUMP NO. 1 START/STOP YCS 1A

PUMP NO. 2 START/STOP YCS 2A

CONTROL PANEL PLC

CONTROL PANEL

480V

INFLUENT PUMP NO. 1 H/O/A RUN

INFLUENT PUMP NO. 2 H/O/A RUN

PRIMARY PLC

BACKUP PLC

INFLUENT PUMP CONTROL PANEL

ALARMS RESET

OIT

TO SHEET MUD-I-2

MUD-I2

MUD-I2

WET WELL

LT 1

LE 1

LT 2

LE 2

LSH 1A

TSH 1A

M

FS2 HIGHHIGH LEVEL FLOAT SWITCH

LSH 2A

TSH 2A

M

INFLUENT DISCHARGE

FS1 HIGH LEVEL FLOAT SWITCH

NO.	DATE	REVISION	APP.

FOR INTERIM REVIEW
ONLY NOT INTENDED FOR
PERMIT, BIDDING OR
CONSTRUCTION PURPOSES.
ENGINEER:
HOSS FOROUZAN
P.E. SERIAL NO.77748
12/15/2025

GAI
Gupta & Associates, Inc
CONSULTING ENGINEERING
Registration No. F-2593
302 Dennis St.,
Houston, Texas 77006
Tel: 713-636-2936
Fax: 713-636-2987
email: hforouzan@gaiconsulting.com

IDS Engineering Group
13430 NW. Freeway
Suite 700
Houston, Tx. 77040
713.462.3178
TxEng Firm 2726
TxSurv Firm 10110700

CITY OF HOUSTON
HOUSTON PUBLIC WORKS

LIFT STATION RENEWAL
AND REPLACEMENT FY 2023

MUD NO.67 LIFT STATION P&ID DIAGRAM–I

WBS NUMBER	FOR CITY OF HOUSTON USE ONLY
R-000267-0179-4	
DRAWING SCALE	
HORIZ: VERT:	
CITY OF HOUSTON PM	
NAWARAJ PANTA, P.E.	
SHEET NO. 214 OF 321	

DWG. NO. MUD–I–11

IDS JOB No. 0057-085-00

FILE PATH: O:\H8108_Lift Station Rehabilitation And Reconstruction (IDS)\6 Drawings\Instrumentation And Control\Working\MUD #67\H8108_MUD–I–01.dwg

PLOTTED: 12/11/2025 8:14 PM

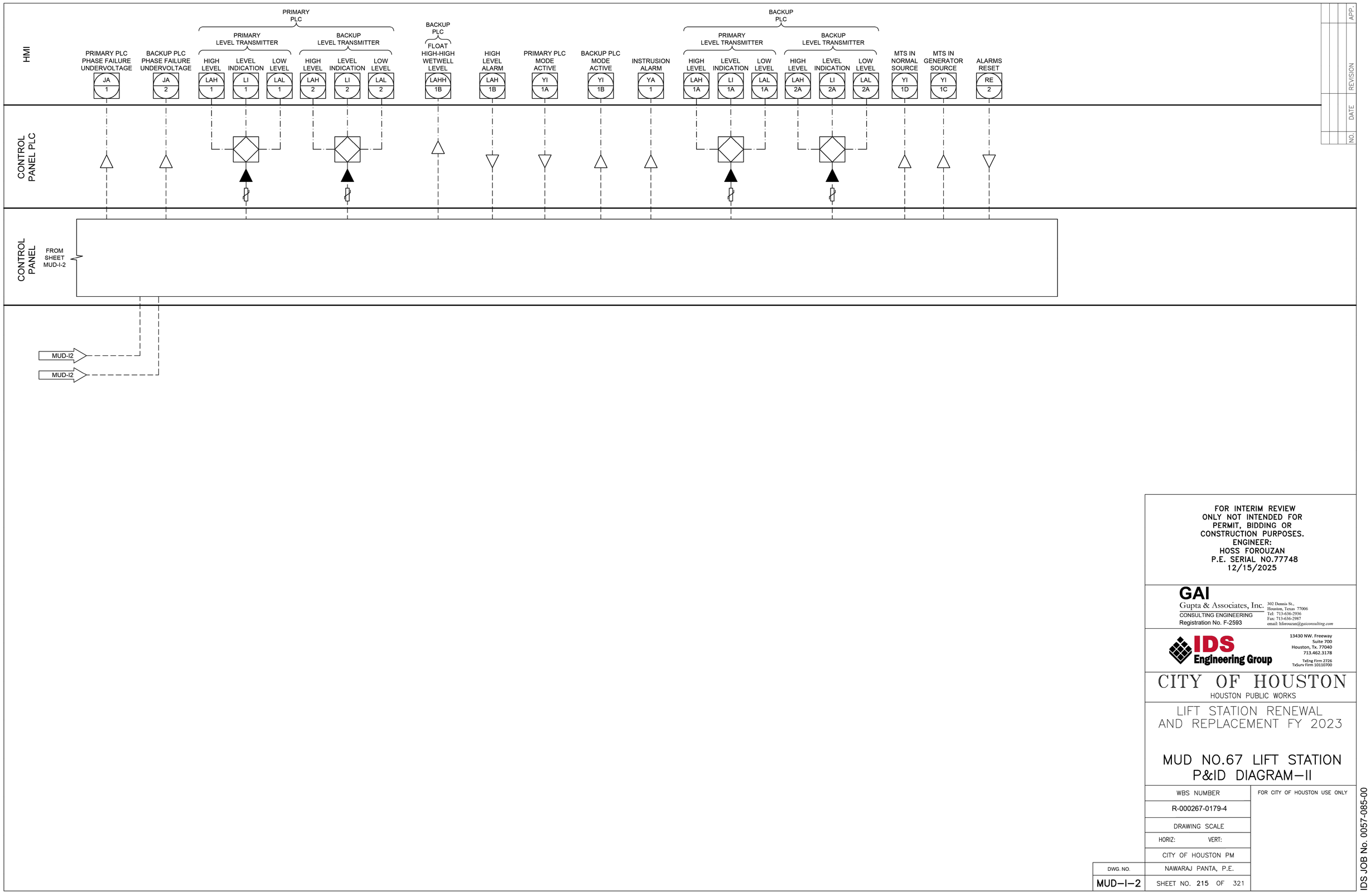

NO.	DATE	REVISION	APP.

FOR INTERIM REVIEW
ONLY NOT INTENDED FOR
PERMIT, BIDDING OR
CONSTRUCTION PURPOSES.
ENGINEER:
HOSS FOROUZAN
P.E. SERIAL NO.77748
12/15/2025

GAI
Gupta & Associates, Inc.
CONSULTING ENGINEERING
Registration No. F-2593
302 Dennis St.,
Houston, Texas 77006
Tel: 713-636-2936
Fax: 713-636-2987
email: hforouzan@gaiconsulting.com

IDS Engineering Group
13430 NW. Freeway
Suite 700
Houston, Tx. 77040
713.462.3178
TxEng Firm 2726
TxSurv Firm 10110700

CITY OF HOUSTON
HOUSTON PUBLIC WORKS

LIFT STATION RENEWAL
AND REPLACEMENT FY 2023

MUD NO.67 LIFT STATION P&ID DIAGRAM–II

WBS NUMBER	FOR CITY OF HOUSTON USE ONLY
R-000267-0179-4	
DRAWING SCALE	
HORIZ: VERT:	
CITY OF HOUSTON PM	
NAWARAJ PANTA, P.E.	
SHEET NO. 215 OF 321	

DWG. NO. MUD–I–2

FILE PATH: O:\H8108_Lift Station Rehabilitation And Reconstruction (IDS)\6 Drawings\Instrumentation And Control\Working\MUD #67\H8108_MUD-I-02.dwg

IDS JOB No. 0057-085-00

PLOTTED: 12/11/2025 8:14 PM

FILE PATH: O:\H8108_Lift Station Rehabilitation And Reconstruction (IDS)\6 Drawings\Instrumentation And Control\Working\MUD #67\H8108_MUD-I-03.dwg

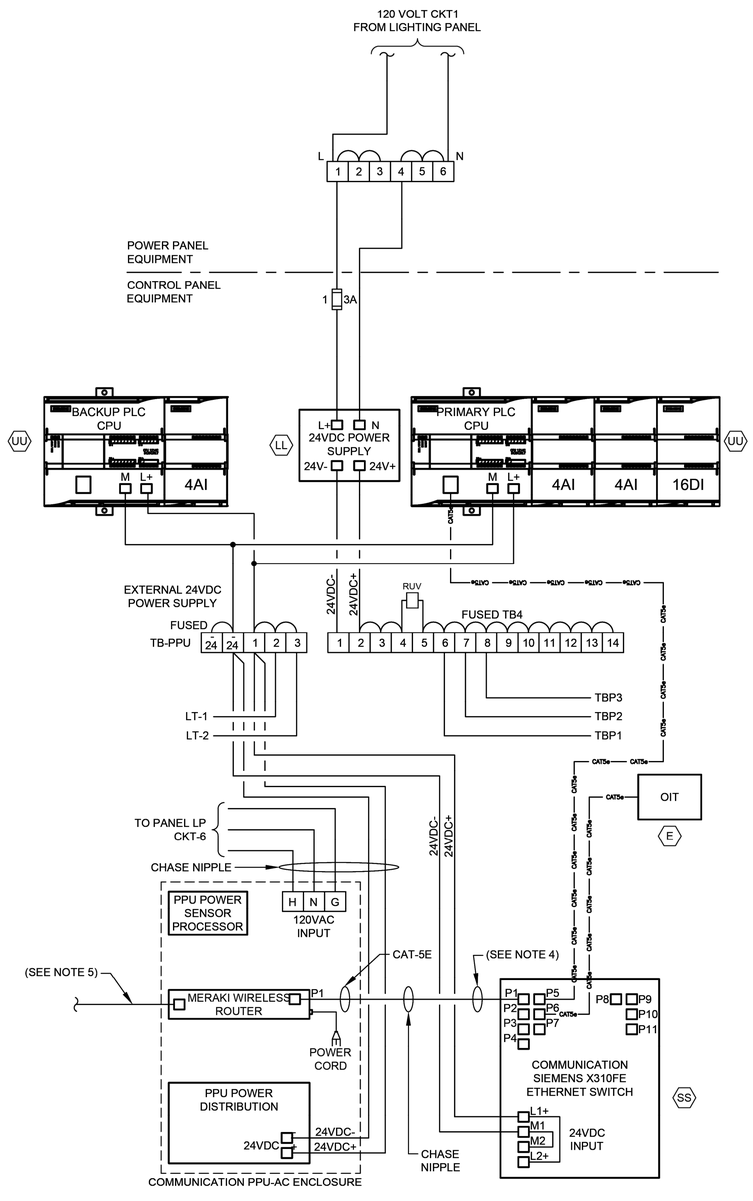

CONTROL POWER &
COMMUNICATIONS WIRING

DIAGRAM

NTS

(SEE NOTE 2 & 6)

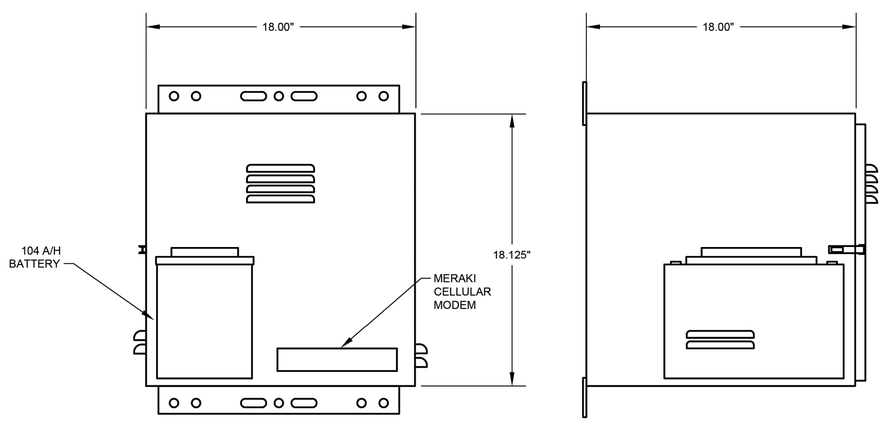

PPU-AC ENCLOSURE
FRONT VIEW

PPU-AC ENCLOSURE
SIDE VIEW

PPU-AC
CONTROL ENCLOSURE

ELEVATION

NTS

(SEE NOTE 7)

NOTES:

1. FOR DESCRIPTION AND RATINGS OF ITEMS INDICATED WITH ITEM TAG, SEE DEVICE RATINGS SCHEDULE.
2. REFER TO SPEC SECTION 16120 FOR CONDUCTOR COLOR CODE.
3. THE PLC POWER SUPPLY SHALL FEED THE 24VDC I/O.
4. ETHERNET CABLE FOR MERAKI CELLULAR ROUTER (P1).
5. POE CABLE TO RADIO.
6. COMMUNICATION PPU-AC & SCADA SHALL BE PROVIDED BY CONTRACTOR INCLUDING TO RUN CONDUITS & WIRES.
7. COORDINATE WITH VENDOR TO PROVIDE PROPER VENTILATION WHERE APPLICABLE.

GENERAL NOTES:

1. NO ELECTRICAL MATERIAL, APPARATUS, DEVICES, APPLIANCES, FIXTURES, OR EQUIPMENT SHALL BE SOLD OR INSTALLED IN THE CITY UNLESS THEY ARE IN CONFORMANCE WITH THE PROVISIONS OF SECTION 508 CITY OF HOUSTON ELECTRICAL CODE, THE LAWS OF THE STATE OF TEXAS AND ANY APPLICABLE RULES AND REGULATIONS ISSUED UNDER THE AUTHORITY OF THE STATE STATUES. THE MAKER'S NAME, TRADEMARK, OR OTHER IDENTIFICATION SYMBOL SHALL BE PLACED ON ALL ELECTRICAL MATERIALS, APPARATUS, DEVICES, APPLIANCES, FIXTURES, AND EQUIPMENT USED OR INSTALLED UNDER THE PROVISIONS OF THIS CODE. ALL ELECTRICAL MATERIALS AND EQUIPMENT SHALL BE LISTED AND LABELED FOR THE INTENDED USE AND SHALL BE INCLUDED IN A LIST PUBLISHED BY AN APPROVAL AGENCY.

NO.	DATE	REVISION	APP.

FOR INTERIM REVIEW
ONLY NOT INTENDED FOR
PERMIT, BIDDING OR
CONSTRUCTION PURPOSES.
ENGINEER:
HOSS FOROUZAN
P.E. SERIAL NO.77748
12/15/2025

GAI
Gupta & Associates, Inc.
CONSULTING ENGINEERING
Registration No. F-2593
302 Dennis St.,
Houston, Texas 77006
Tel: 713-636-2936
Fax: 713-636-2987
email: hforouzan@gaiconsulting.com

IDS Engineering Group
13430 NW. Freeway
Suite 700
Houston, Tx. 77040
713.462.3178
TxEng Firm 2726
TxSurv Firm 10110700

CITY OF HOUSTON
HOUSTON PUBLIC WORKS

LIFT STATION RENEWAL AND REPLACEMENT FY 2023

MUD NO.67 LIFT STATION COMMUNICATION DIAGRAM

WBS NUMBER	FOR CITY OF HOUSTON USE ONLY
R-000267-0179-4	
DRAWING SCALE	
HORIZ: VERT:	
CITY OF HOUSTON PM	
NAWARAJ PANTA, P.E.	
SHEET NO. 216 OF 321	

DWG. NO.
MUD-I-3

IDS JOB No. 0057-085-00

PLOTTED: 12/11/2025 8:14 PM

EQUIPMENT AND DEVICE SCHEDULE

ITEM	QUANTITY	DESCRIPTION
A	1	PANEL BOARD, 120/240V, 1 PHASE, 3 WIRE, 100A, 12 CKTS
B	2	FULL VOLTAGE, NON-REVERSING, SINGLE SPEED, AUTOMATIC MOTOR STARTER W/120 VOLT CONTROL COIL, NEMA SIZE AS SCHEDULED.
C	2	TIME DELAY RELAY WITH THREE FORM C CONTACTS, 120VAC COIL AND 11 PIN SOCKET BASE.
D	1	SINGLE CHANNEL INTRINSICALLY SAFE RELAY
E	1	PROGRAMMING SCREEN (OIT)
F	2	HAND-OFF-AUTO SWITCH, 3 POSITION, HEAVY-DUTY, OILTIGHT WITH 2 SETS OF CONTACT BLOCKS (PUMP CONTROL)
G	2	INDICATING LIGHT, HEAVY DUTY, OILTIGHT, RED, 24 VDC, LED, WITH "RUN" LEGEND
H	1	PERPETUAL POWER UNIT (PPU)
I	1	PUMP ALARM RESET PUSHBUTTON
J	2	SWITCH FOR CABINET LIGHT, 120V, 20A, SPST
K	3	DUPLEX RECEPTACLE, 120V, 20A, 2 WIRE, GROUNDED
L	2	24" LED STRIP LIGHT 120V SUITABLE FOR ZERO DEGREE OPERATION.
M	1	SURGE PROTECTOR - INCOMING POWER
N	*	NOT USED.
P	2	CURRENT TRANSFORMER, RATIO AS SCHEDULED W/4-20mA OUTPUT.
Q	12	TERMINAL BLOCKS, SIZED FOR MOTOR POWER REQUIREMENTS
R	*	RELAY WITH THREE FORM C CONTACTS, AND 11 PIN SOCKET BASE
S	*	NOT USED.
T	*	NAMEPLATES, SEE SPECIFICATIONS (SEE NAMEPLATE SCHEDULE)
U	2	SOLID STATE MOTOR OVERLOAD RELAY
V	6	FUSE HOLDER & FUSES - PHASE FAILURE
W	1	NEMA 3R GASKETED ALUMINUM ENCLOSURE WITHOUT VENTS 72"H x 48"w x 36"D
X	1	DOOR MOUNTED ROTARY HANDLE DISCONNECT SWITCH (SUITABLE FOR ENVIRONMENT)
Y	1	THERMAL-MAGNETIC MOLDED CASE MAIN CIRCUIT BREAKER, SIZE AS SCHEDULED
Z	2	ADJUSTABLE INSTANTENOUS TRIP MOTOR CIRCUIT PROTECTOR, SIZE AS SCHEDULED
AA	*	TERMINAL BLOCKS
BB	2	EXTERNAL OVERLOAD RESET PUSHBUTTON MECHANISM
CC	2	ANALOG I/O SURGE SUPPRESSOR
DD	1	WIRE DUCT 2" WIDE x 2" DEEP MINIMUM
EE	1	THERMAL-MAGNETIC MODLED CASE CIRCUIT BREAKER FOR LIGHTING TRANSFORMER, SIZE AS SCHEDULED
FF	1	GROUND BUS
GG	1	10 KVA, 480 - 240/120V,1ϕ, 3W DRY TYPE NEMA 3R ENCLOSURE TRANSFORMER
HH	*	NOT USED.
II	1	120VAC - 24VAC POWER SUPPLY (AS REQUIRED)
JJ	11	CARTRIDGE FUSES & FUSE HOLDER
KK	8	QUARTER TURN CAPTIVE DOOR CLOSURE
LL	1	120VAC - 24VDC PLC POWER SUPPLY 5A
MM	2	MOTION SWITCH
NN	*	NOT USED
PP	2	INDICATING LED LIGHT, HEAVY DUTY, OILTIGHT, GREEN, 24 VDC, LED WITH " PRIMARY PLC" & "BACKUP PLC" LEGEND
QQ	*	NOT USED
RR	*	NOT USED
SS	1	COMMUNICATION ETHERNET SWITCH
TT	1	POWER SURGE PROTECTOR - CONTROL POWER
UU	2	PROGRAMMABLE LOGIC CONTROLLER WITH EXPANSION UNIT
VV	1	PHASE AND UNDER VOLTAGE MONITOR
WW	*	FUSED TERMINAL BLOCKS
XX	2	PUMP PROTECTION MODULE RATED FOR CLASS I, DIVISION I
YY	2	ANALOG SIGNAL ISOLATOR
ZZ	-	NOT USED
AB	-	NOT USED.
AC	1	POWER DISTRIBUTION BLOCK
AD	1	NEUTRAL LUG
AE	1	6" EXHAUST FAN, 120V, STAINLESS FILTERS & GRILL PACKAGE W/BUG GUARD
AF	1	T-STAT FOR EXHAUST FAN

* - AS SCHEDULED

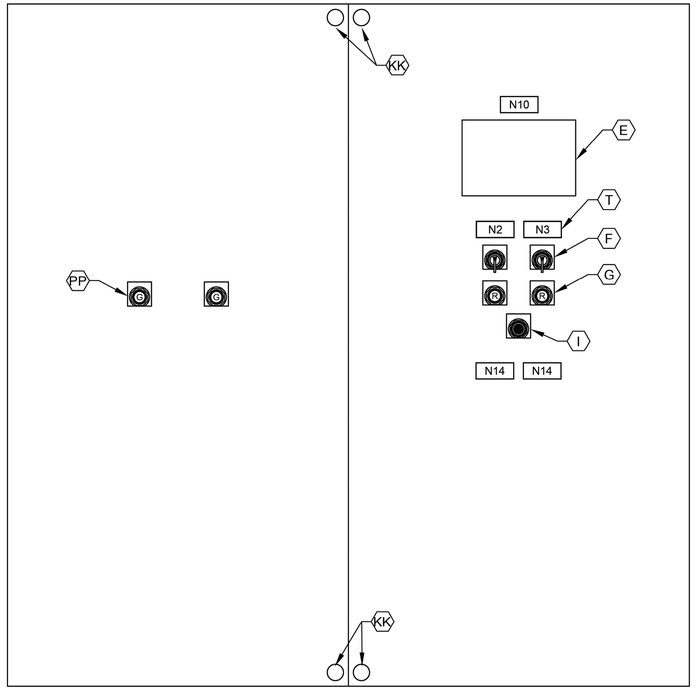

CONTROL PANEL FRONT INNER DOOR

ELEVATION

NTS

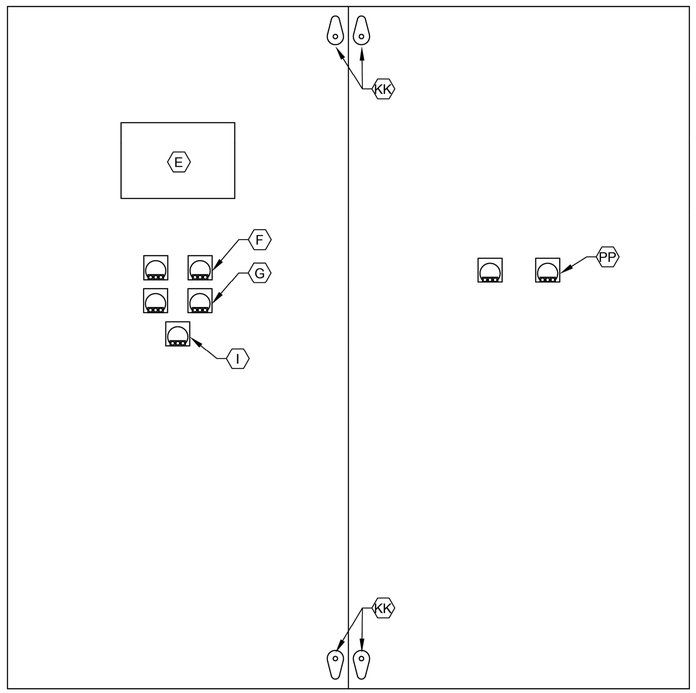

CONTROL PANEL BACK INNER DOOR

ELEVATION

NTS

NOTES:

1. NAMEPLATES SHALL BE MOUNTED TO PANELS USING STAINLESS STEEL HARDWARE.
2. REFER SPECIFICATIONS FOR ALL PANEL COMPONENTS.

GENERAL NOTES:

1. NO ELECTRICAL MATERIAL, APPARATUS, DEVICES, APPLIANCES, FIXTURES, OR EQUIPMENT SHALL BE SOLD OR INSTALLED IN THE CITY UNLESS THEY ARE IN CONFORMANCE WITH THE PROVISIONS OF SECTION 508 CITY OF HOUSTON ELECTRICAL CODE, THE LAWS OF THE STATE OF TEXAS AND ANY APPLICABLE RULES AND REGULATIONS ISSUED UNDER THE AUTHORITY OF THE STATE STATUES. THE MAKER'S NAME, TRADEMARK, OR OTHER IDENTIFICATION SYMBOL SHALL BE PLACED ON ALL ELECTRICAL MATERIALS, APPARATUS, DEVICES, APPLIANCES, FIXTURES, AND EQUIPMENT USED OR INSTALLED UNDER THE PROVISIONS OF THIS CODE. ALL ELECTRICAL MATERIALS AND EQUIPMENT SHALL BE LISTED AND LABELED FOR THE INTENDED USE AND SHALL BE INCLUDED IN A LIST PUBLISHED BY AN APPROVAL AGENCY.

NO.	DATE	REVISION	APP.

FOR INTERIM REVIEW
ONLY NOT INTENDED FOR
PERMIT, BIDDING OR
CONSTRUCTION PURPOSES.
ENGINEER:
HOSS FOROUZAN
P.E. SERIAL NO.77748
12/15/2025

GAI
Gupta & Associates, Inc.
CONSULTING ENGINEERING
Registration No. F-2593
302 Dennis St.,
Houston, Texas 77006
Tel: 713-636-2936
Fax: 713-636-2987
email: hforouzan@gaiconsulting.com

IDS Engineering Group
13430 NW. Freeway
Suite 700
Houston, Tx. 77040
713.462.3178
TxEng Firm 2726
TxSurv Firm 10110700

CITY OF HOUSTON

HOUSTON PUBLIC WORKS

LIFT STATION RENEWAL AND REPLACEMENT FY 2023

MUD NO.67 LIFT STATION CONTROL PANEL EQUIP. LAYOUT & SCHEDULE

WBS NUMBER	FOR CITY OF HOUSTON USE ONLY
R-000267-0179-4	
DRAWING SCALE	
HORIZ: VERT:	
CITY OF HOUSTON PM	
NAWARAJ PANTA, P.E.	
SHEET NO. 217 OF 321	

DWG. NO. MUD–I–4

IDS JOB No. 0057-085-00

FILE PATH: O:\H8108_Lift Station Rehabilitation And Reconstruction (IDS)\6 Drawings\Instrumentation And Control\Working\MUD #67\H8108_MUD–I–04.dwg

PLOTTED: 12/11/2025 8:14 PM

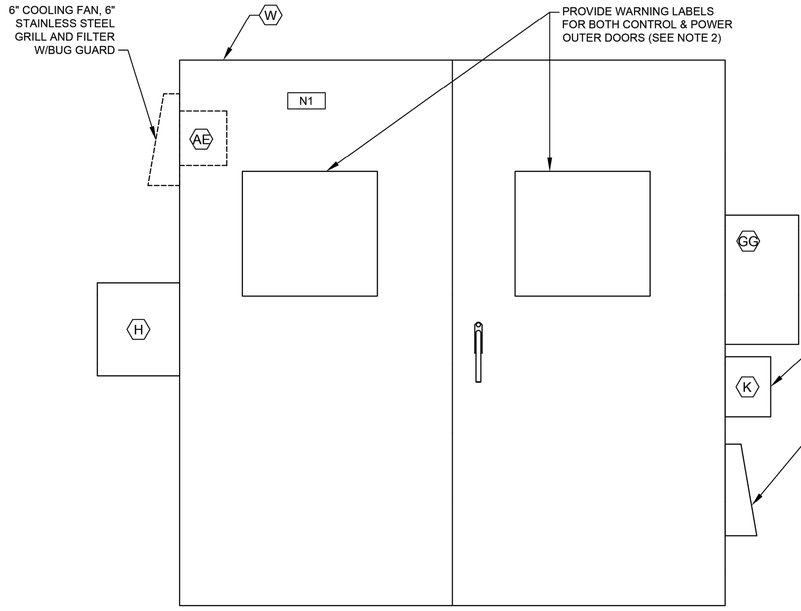

CONTROL CABINET (CONTROL SIDE)
OUTER DOOR

ELEVATION

NTS

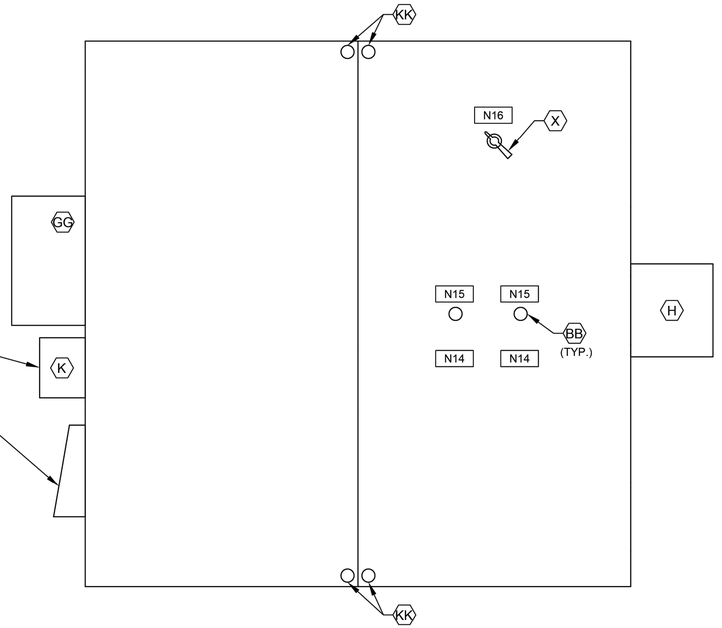

CONTROL CABINET (POWER SIDE)
INNER DOOR

ELEVATION

NTS
(SEE NOTE 1)

NOTES:

1. SEE SHEET MUD-I-4 FOR EQUIPMENT SCHEDULE.
2. REFER TO NEC SECTIONS 110.16 & 110.21

GENERAL NOTES:

1. NO ELECTRICAL MATERIAL, APPARATUS, DEVICES, APPLIANCES, FIXTURES, OR EQUIPMENT SHALL BE SOLD OR INSTALLED IN THE CITY UNLESS THEY ARE IN CONFORMANCE WITH THE PROVISIONS OF SECTION 508 CITY OF HOUSTON ELECTRICAL CODE, THE LAWS OF THE STATE OF TEXAS AND ANY APPLICABLE RULES AND REGULATIONS ISSUED UNDER THE AUTHORITY OF THE STATE STATUES. THE MAKER'S NAME, TRADEMARK, OR OTHER IDENTIFICATION SYMBOL SHALL BE PLACED ON ALL ELECTRICAL MATERIALS, APPARATUS, DEVICES, APPLIANCES, FIXTURES, AND EQUIPMENT USED OR INSTALLED UNDER THE PROVISIONS OF THIS CODE. ALL ELECTRICAL MATERIALS AND EQUIPMENT SHALL BE LISTED AND LABELED FOR THE INTENDED USE AND SHALL BE INCLUDED IN A LIST PUBLISHED BY AN APPROVAL AGENCY.

NAMEPLATE SCHEDULE

DESIGNATION	ENGRAVED	DESIGNATION	ENGRAVED
N1	PUMP STATION DESIGNATION	N8	NOT USED.
N2	PUMP NO. 1	N9	NOT USED.
N3	PUMP NO. 2	N10	PROGRAMMING SCREEN
N4	NOT USED.	N11	NOT USED.
N5	NOT USED.	N12	PRIMARY PLC
N6	NOT USED.	N13	BACKUP PLC
N7	NOT USED.	N14	MOTOR DATA
			HORSEPOWER (OUTPUT) ----------
			RPM AT FULL LOAD ----------
			TIME RATING ----------
			FREQUENCY ----------
			NUMBER OF PHASES ----------
			MODEL NUMBER ----------
			RATED VOLTAGE ----------
			SERVICE FACTOR ----------
			FULL LOAD AMPS ----------
			INSULATION CLAS ----------
			NEMA DESIGN LETTER ----------
			TEMPERATURE RISE ----------
			NEMA FRAME SIZE ----------
			DATE OF MANUFACTURE ----------
			THERMO PROTECTION (IF REQUIRED) --
			MOISTURE PROTECTION (IF REQUIRED)-
		N15	EXTERNAL OVERLOAD RESET PUSH BUTTON MECHANISM
		N16	MAIN BREAKER

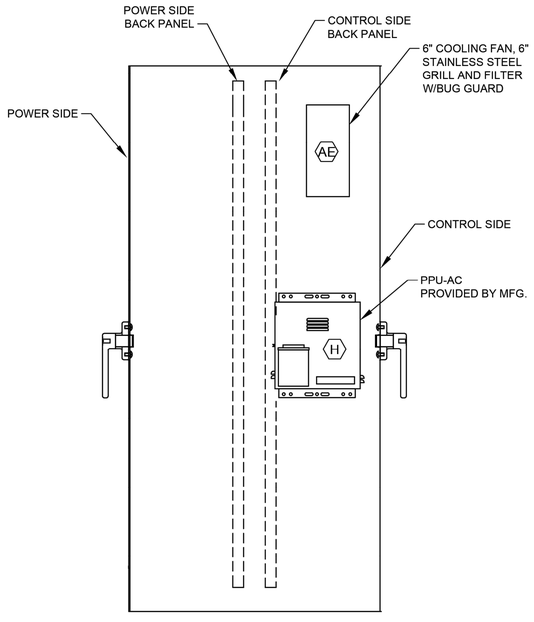

CONTROL CABINET (LEFT SIDE VIEW)

ELEVATION

NTS

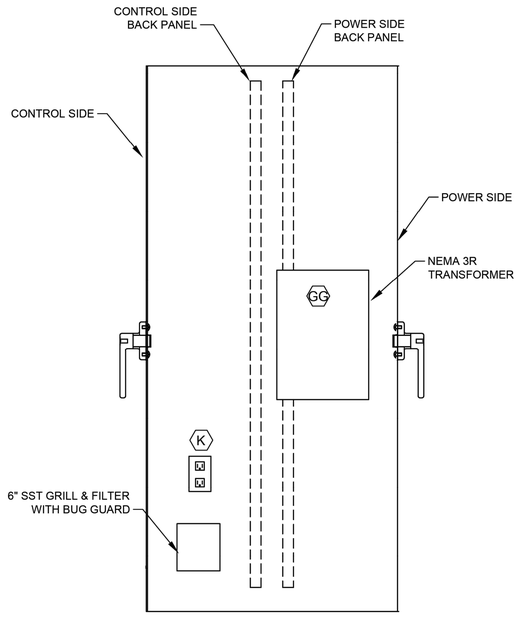

CONTROL CABINET (RIGHT SIDE VIEW)

ELEVATION

NTS

NO.	DATE	REVISION	APP.

FOR INTERIM REVIEW
ONLY NOT INTENDED FOR
PERMIT, BIDDING OR
CONSTRUCTION PURPOSES.
ENGINEER:
HOSS FOROUZAN
P.E. SERIAL NO.77748
12/15/2025

GAI
Gupta & Associates, Inc.
CONSULTING ENGINEERING
Registration No. F-2593
302 Dennis St.,
Houston, Texas 77006
Tel: 713-636-2936
Fax: 713-636-2987
email: hforouzan@gaiconsulting.com

IDS Engineering Group
13430 NW. Freeway
Suite 700
Houston, Tx. 77040
713.462.3178
TxEng Firm 2726
TxSurv Firm 10110700

CITY OF HOUSTON
HOUSTON PUBLIC WORKS

LIFT STATION RENEWAL
AND REPLACEMENT FY 2023

MUD NO.67 LIFT STATION CONTROL PANEL EQUIPMENT LAYOUT–I

WBS NUMBER	FOR CITY OF HOUSTON USE ONLY
R-000267-0179-4	
DRAWING SCALE	
HORIZ: VERT:	
CITY OF HOUSTON PM	
NAWARAJ PANTA, P.E.	
SHEET NO. 218 OF 321	

DWG. NO. MUD–I–5

FILE PATH: O:\H8108_Lift Station Rehabilitation And Reconstruction (IDS)\6 Drawings\Instrumentation And Control\Working\MUD #67\H8108_MUD–I–05.dwg

IDS JOB No. 0057-085-00

PLOTTED: 12/11/2025 8:14 PM

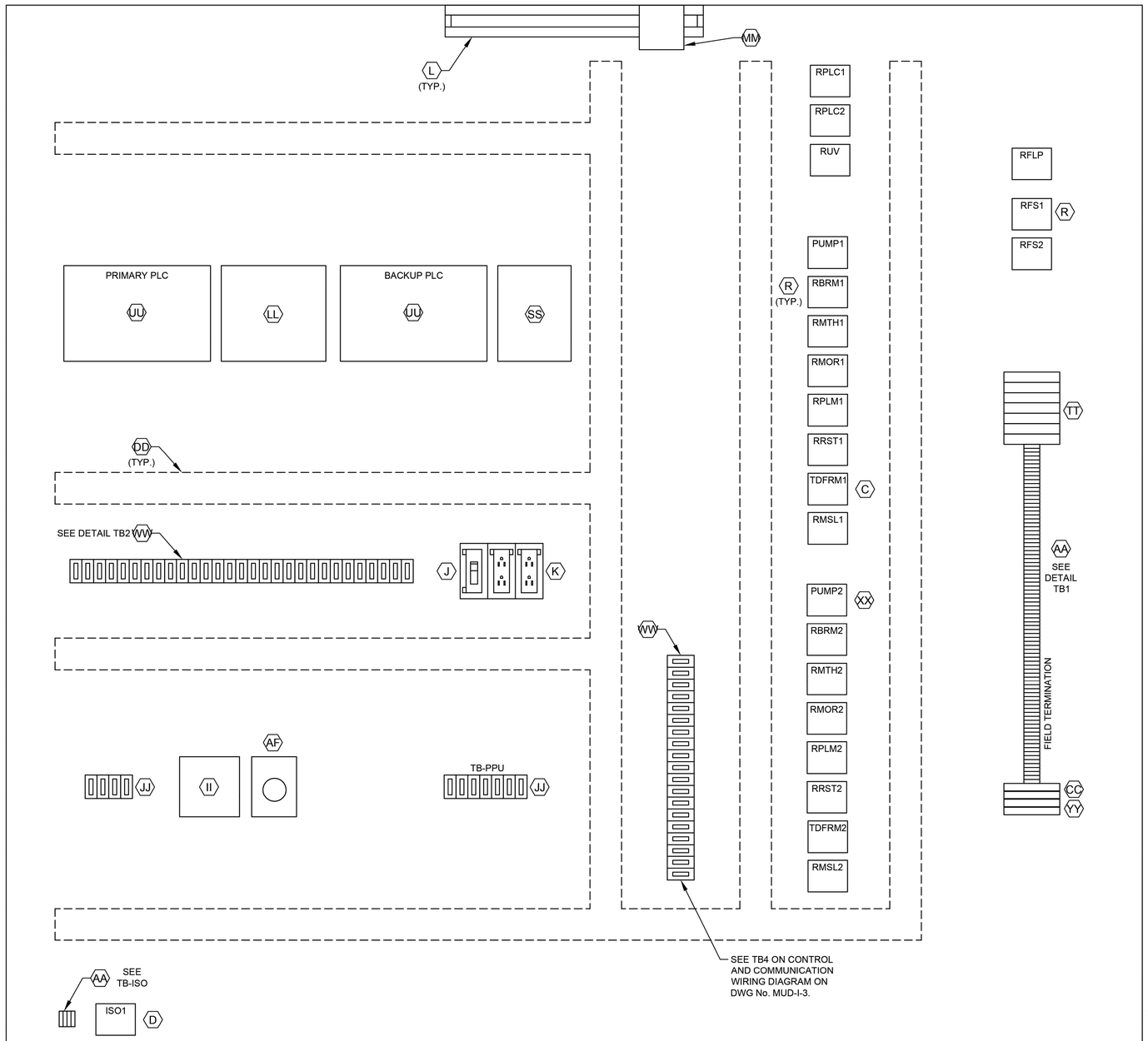

CONTROL PANEL
ELEVATION

L1A
L1N
SPARE
3
3N
49
50
51
52
53
54
1004
1
24V-
24V-
1002
2
11
1001
1001A
12
1003
1003A
1002
1004
18
3N
19
20
36
36N
41
42
43
44
SPARE
L1A
L1N
103
104
105
106
107
108
110
113
115
116
119
SPARE
203
204
205
206
207
208
210
213
215
216
219

DETAIL TB1

ALL L AND N FOR EACH PUMP CONTROL TO BE FUSED

36A
37A
50
52
54
52A
54A
L+
M
35B
38B
41B
47B
13B
13AB
13GB
L+
M
14B
14AB
14GB
L+
M
13
13A
13G
14
14A
14G
SPARE
18
SPARE
28
29
32
35B
33
42
44
SPARE
103
104
115
109
110
118
120
121
122
123
SPARE
209
210
211
218
220
222
223

DETAIL TB2

1500
1501
1503
1504

DETAIL TB-ISO

LEGEND	
TAG	DESCRIPTION
RMTH	MOTOR HIGH TEMPERATURE ALARM RELAY
RPLM	PLC PUMP RUN RELAY
RRST	PUMP RESET AUX RELAY
RPLC	PLC MODE AUX RELAY
RMOR	MOTOR OVERLOAD ALARM RELAY
RBRM	BACKUP SYSTEM RUN RELAY
RUV	UNDER VOLTAGE RELAY
ISO	INTRINSICALLY SAFE RELAY
RFS	PUMP RUN FLOAT SWITCH RELAY
TDFRM	TIMER FLOAT SWITCH RUN RELAY
RMSL	MOTOR SEAL LEAK ALARM RELAY
RFLP	FLOAT LOCKOUT PUMP RELAY

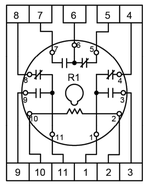

RELAY DETAIL
ITEM R

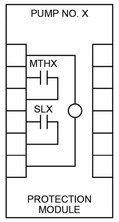

PUMP PROTECTION MODULE
DETAIL, ITEM XX

NOTE: REPLACE "X" WITH APPROPRIATE PUMP NO.

NOTES:

1. SEE SHEET MUD-I-4 FOR EQUIPMENT SCHEDULE.

GENERAL NOTES:

1. NO ELECTRICAL MATERIAL, APPARATUS, DEVICES, APPLIANCES, FIXTURES, OR EQUIPMENT SHALL BE SOLD OR INSTALLED IN THE CITY UNLESS THEY ARE IN CONFORMANCE WITH THE PROVISIONS OF SECTION 508 CITY OF HOUSTON ELECTRICAL CODE, THE LAWS OF THE STATE OF TEXAS AND ANY APPLICABLE RULES AND REGULATIONS ISSUED UNDER THE AUTHORITY OF THE STATE STATUES. THE MAKER'S NAME, TRADEMARK, OR OTHER IDENTIFICATION SYMBOL SHALL BE PLACED ON ALL ELECTRICAL MATERIALS, APPARATUS, DEVICES, APPLIANCES, FIXTURES, AND EQUIPMENT USED OR INSTALLED UNDER THE PROVISIONS OF THIS CODE. ALL ELECTRICAL MATERIALS AND EQUIPMENT SHALL BE LISTED AND LABELED FOR THE INTENDED USE AND SHALL BE INCLUDED IN A LIST PUBLISHED BY AN APPROVAL AGENCY.

NO.	DATE	REVISION	APP.

FOR INTERIM REVIEW
ONLY NOT INTENDED FOR
PERMIT, BIDDING OR
CONSTRUCTION PURPOSES.
ENGINEER:
HOSS FOROUZAN
P.E. SERIAL NO.77748
12/15/2025

GAI
Gupta & Associates, Inc.
CONSULTING ENGINEERING
Registration No. F-2593
302 Dennis St.,
Houston, Texas 77006
Tel: 713-636-2936
Fax: 713-636-2987
email: hforouzan@gaiconsulting.com

IDS Engineering Group
13430 NW. Freeway
Suite 700
Houston, Tx. 77040
713.462.3178
TxEng Firm 2726
TxSurv Firm 10110700

CITY OF HOUSTON
HOUSTON PUBLIC WORKS

LIFT STATION RENEWAL
AND REPLACEMENT FY 2023

MUD NO.67 LIFT STATION CONTROL PANEL EQUIPMENT LAYOUT–II

WBS NUMBER	FOR CITY OF HOUSTON USE ONLY
R-000267-0179-4	
DRAWING SCALE	
HORIZ: VERT:	
CITY OF HOUSTON PM	
NAWARAJ PANTA, P.E.	
SHEET NO. 219 OF 321	

DWG. NO.
MUD–I–6

IDS JOB No. 0057-085-00

FILE PATH: O:\H8108_Lift Station Rehabilitation And Reconstruction (IDS)\6 Drawings\Instrumentation And Control\Working\MUD #67\H8108_MUD–I–06.dwg

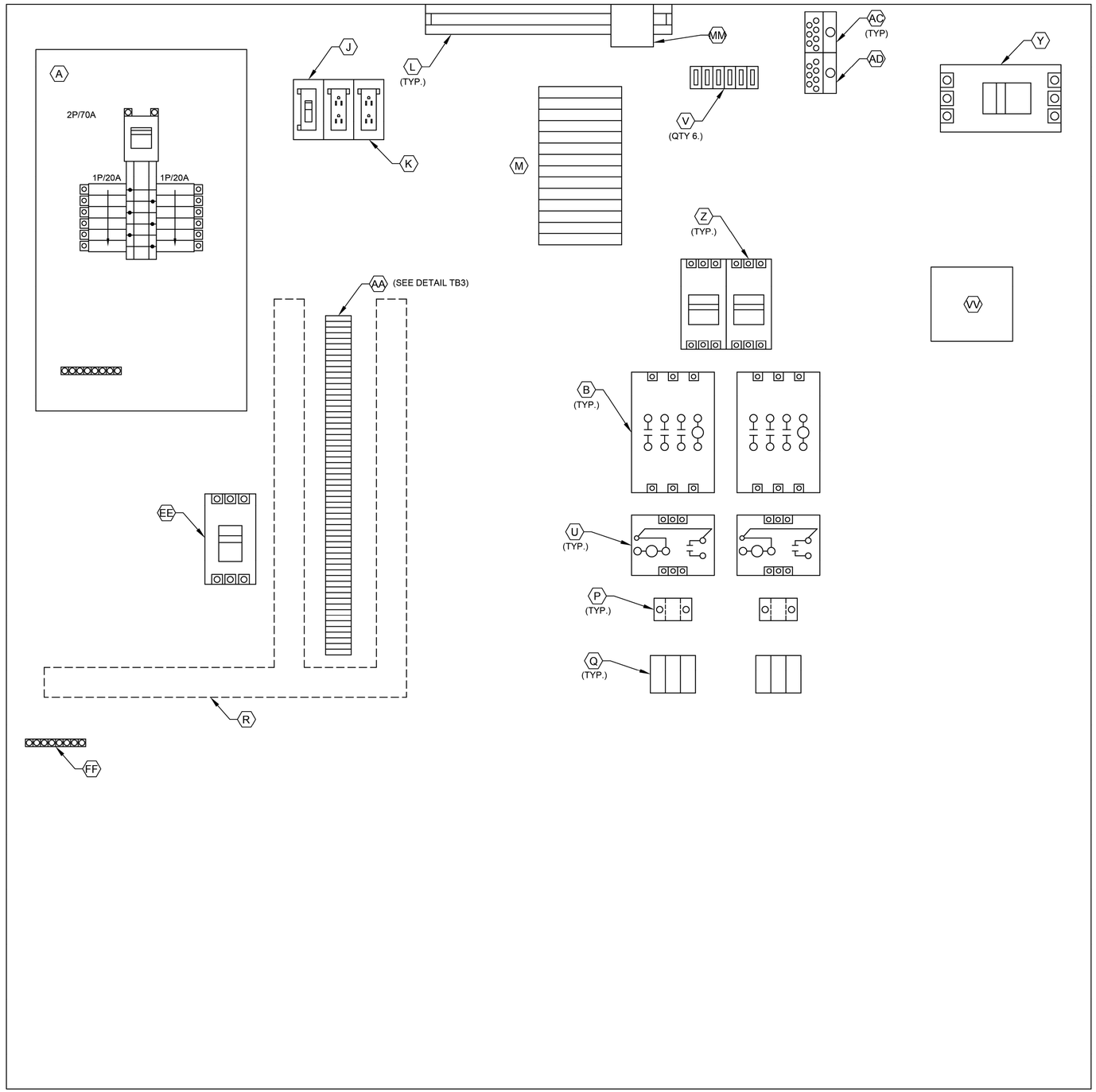

POWER PANEL
ELEVATION

3
18
L1A
L1N
SPARE
SPARE
103
104
105
106
107
108
110
113
115
116
119
SPARE
203
204
205
206
207
208
210
213
215
216
219
SPARE
SPARE
SPARE
SPARE
SPARE
SPARE
SPARE
SPARE
SPARE
SPARE

DETAIL TB3

NOTES:

1. SEE SHEET MUD-I-4 FOR EQUIPMENT SCHEDULE.

GENERAL NOTES:

1. NO ELECTRICAL MATERIAL, APPARATUS, DEVICES, APPLIANCES, FIXTURES, OR EQUIPMENT SHALL BE SOLD OR INSTALLED IN THE CITY UNLESS THEY ARE IN CONFORMANCE WITH THE PROVISIONS OF SECTION 508 CITY OF HOUSTON ELECTRICAL CODE, THE LAWS OF THE STATE OF TEXAS AND ANY APPLICABLE RULES AND REGULATIONS ISSUED UNDER THE AUTHORITY OF THE STATE STATUES. THE MAKER'S NAME, TRADEMARK, OR OTHER IDENTIFICATION SYMBOL SHALL BE PLACED ON ALL ELECTRICAL MATERIALS, APPARATUS, DEVICES, APPLIANCES, FIXTURES, AND EQUIPMENT USED OR INSTALLED UNDER THE PROVISIONS OF THIS CODE. ALL ELECTRICAL MATERIALS AND EQUIPMENT SHALL BE LISTED AND LABELED FOR THE INTENDED USE AND SHALL BE INCLUDED IN A LIST PUBLISHED BY AN APPROVAL AGENCY.

NO.	DATE	REVISION	APP.

FOR INTERIM REVIEW
ONLY NOT INTENDED FOR
PERMIT, BIDDING OR
CONSTRUCTION PURPOSES.
ENGINEER:
HOSS FOROUZAN
P.E. SERIAL NO.77748
12/15/2025

GAI
Gupta & Associates, Inc.
CONSULTING ENGINEERING
Registration No. F-2593
302 Dennis St.,
Houston, Texas 77006
Tel: 713-636-2936
Fax: 713-636-2987
email: hforouzan@gaiconsulting.com

IDS Engineering Group
13430 NW. Freeway
Suite 700
Houston, Tx. 77040
713.462.3178
TxEng Firm 2726
TxSurv Firm 10110700

CITY OF HOUSTON
HOUSTON PUBLIC WORKS

LIFT STATION RENEWAL
AND REPLACEMENT FY 2023

MUD NO.67 LIFT STATION CONTROL PANEL EQUIPMENT LAYOUT–III

WBS NUMBER	FOR CITY OF HOUSTON USE ONLY
R-000267-0179-4	
DRAWING SCALE	
HORIZ: VERT:	
CITY OF HOUSTON PM	
NAWARAJ PANTA, P.E.	

DWG. NO.	SHEET NO.
MUD–I–7	220 OF 321

IDS JOB No. 0057-085-00

PLOTTED: 12/11/2025 8:14 PM

FILE PATH: O:\H8108_Lift Station Rehabilitation And Reconstruction (IDS)\6 Drawings\Instrumentation And Control\Working\MUD #67\H8108_MUD-I-07.dwg

PLOTTED: 12/11/2025 8:14 PM

FILE PATH: O:\H8108_Lift Station Rehabilitation And Reconstruction (IDS)\6 Drawings\Instrumentation And Control\Working\MUD #67\H8108_MUD-I-08.dwg

NO.	DATE	REVISION	APP.

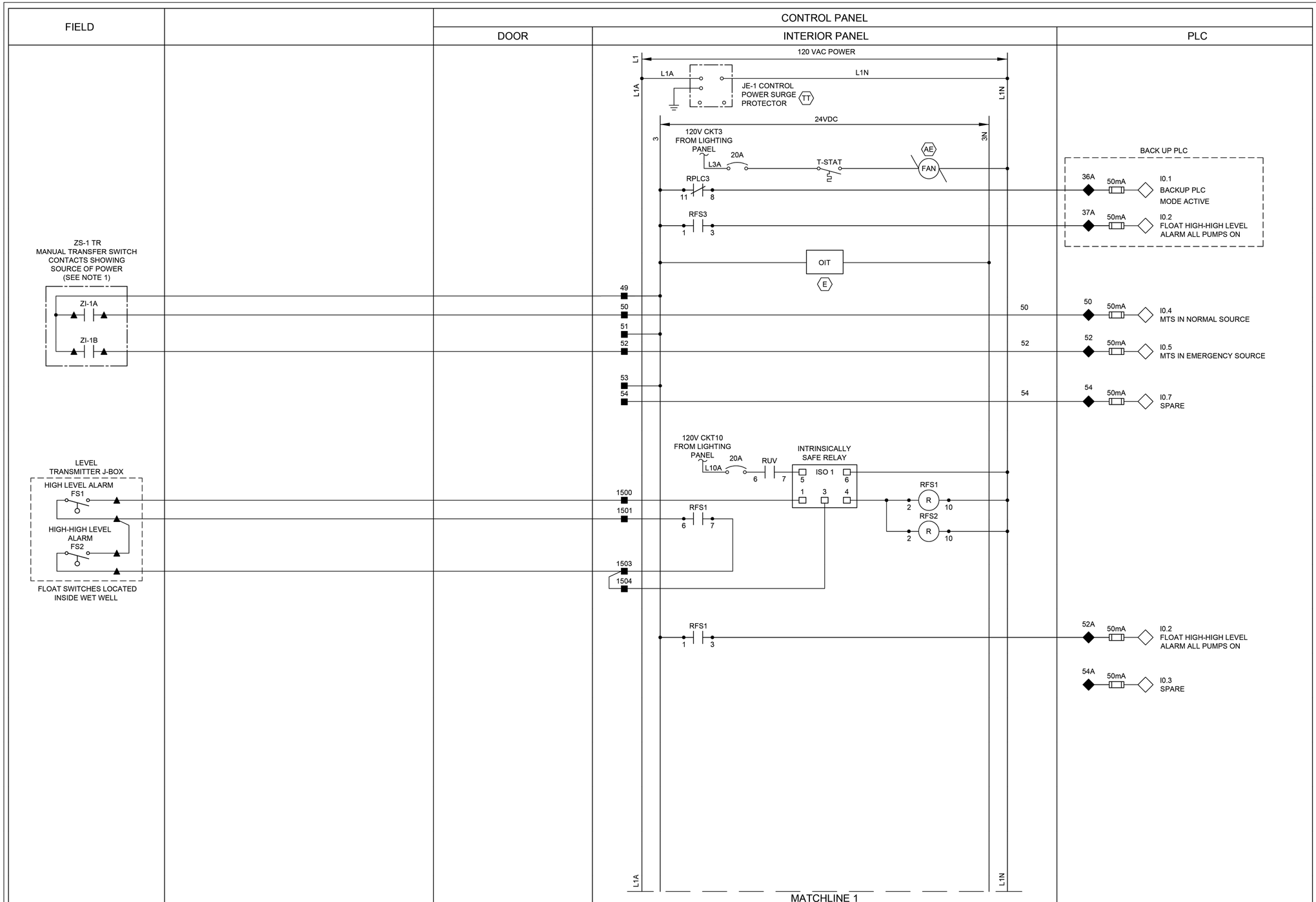

NOTES:

1. PROVIDE MANUAL TRANSFER SWITCH DRY CONTACT.
2. ALL FLOAT CONTROL CIRCUIT WIRES COLOR SHALL BE YELLOW.

GENERAL NOTES:

1. NO ELECTRICAL MATERIAL, APPARATUS, DEVICES, APPLIANCES, FIXTURES, OR EQUIPMENT SHALL BE SOLD OR INSTALLED IN THE CITY UNLESS THEY ARE IN CONFORMANCE WITH THE PROVISIONS OF SECTION 508 CITY OF HOUSTON ELECTRICAL CODE, THE LAWS OF THE STATE OF TEXAS AND ANY APPLICABLE RULES AND REGULATIONS ISSUED UNDER THE AUTHORITY OF THE STATE STATUES. THE MAKER'S NAME, TRADEMARK, OR OTHER IDENTIFICATION SYMBOL SHALL BE PLACED ON ALL ELECTRICAL MATERIALS, APPARATUS, DEVICES, APPLIANCES, FIXTURES, AND EQUIPMENT USED OR INSTALLED UNDER THE PROVISIONS OF THIS CODE. ALL ELECTRICAL MATERIALS AND EQUIPMENT SHALL BE LISTED AND LABELED FOR THE INTENDED USE AND SHALL BE INCLUDED IN A LIST PUBLISHED BY AN APPROVAL AGENCY.

LEGEND

- △ DEVICE OR FIELD TERMINAL LOCATED AT MOTOR
- ✳ DEVICE OR FIELD TERMINAL LOCATED REMOTE
- □ DEVICE OR FIELD TERMINAL LOCATED AT MCC/POWER PANEL
- ■ FIELD TERMINAL LOCATED AT CONTROL PANEL
- ▲ REMOTE TERMINAL
- ● DEVICE TERMINAL NO.
- ◆ PLC INTERFACE TERMINAL

FOR INTERIM REVIEW
ONLY NOT INTENDED FOR
PERMIT, BIDDING OR
CONSTRUCTION PURPOSES.
ENGINEER:
HOSS FOROUZAN
P.E. SERIAL NO.77748
12/15/2025

GAI
Gupta & Associates, Inc.
CONSULTING ENGINEERING
Registration No. F-2593
302 Dennis St.,
Houston, Texas 77006
Tel: 713-636-2916
Fax: 713-636-2987
email: hforouzan@gaiconsulting.com

IDS Engineering Group
13430 NW. Freeway
Suite 700
Houston, Tx. 77040
713.462.3178
TxEng Firm 2726
TxSurv Firm 10110700

CITY OF HOUSTON
HOUSTON PUBLIC WORKS

LIFT STATION RENEWAL
AND REPLACEMENT FY 2023

MUD NO.67 LIFT STATION CONTROL PANEL CONTROL WIRING DIAGRAM-I

WBS NUMBER	FOR CITY OF HOUSTON USE ONLY
R-000267-0179-4	
DRAWING SCALE	
HORIZ: VERT:	
CITY OF HOUSTON PM	
NAWARAJ PANTA, P.E.	
SHEET NO. 221 OF 321	

DWG. NO.
MUD-I-8

IDS JOB No. 0057-085-00

PLOTTED: 12/11/2025 8:14 PM

FILE PATH: O:\H8108_Lift Station Rehabilitation And Reconstruction (IDS)\6 Drawings\Instrumentation And Control\Working\MUD #67\H8108_MUD-I-09.dwg

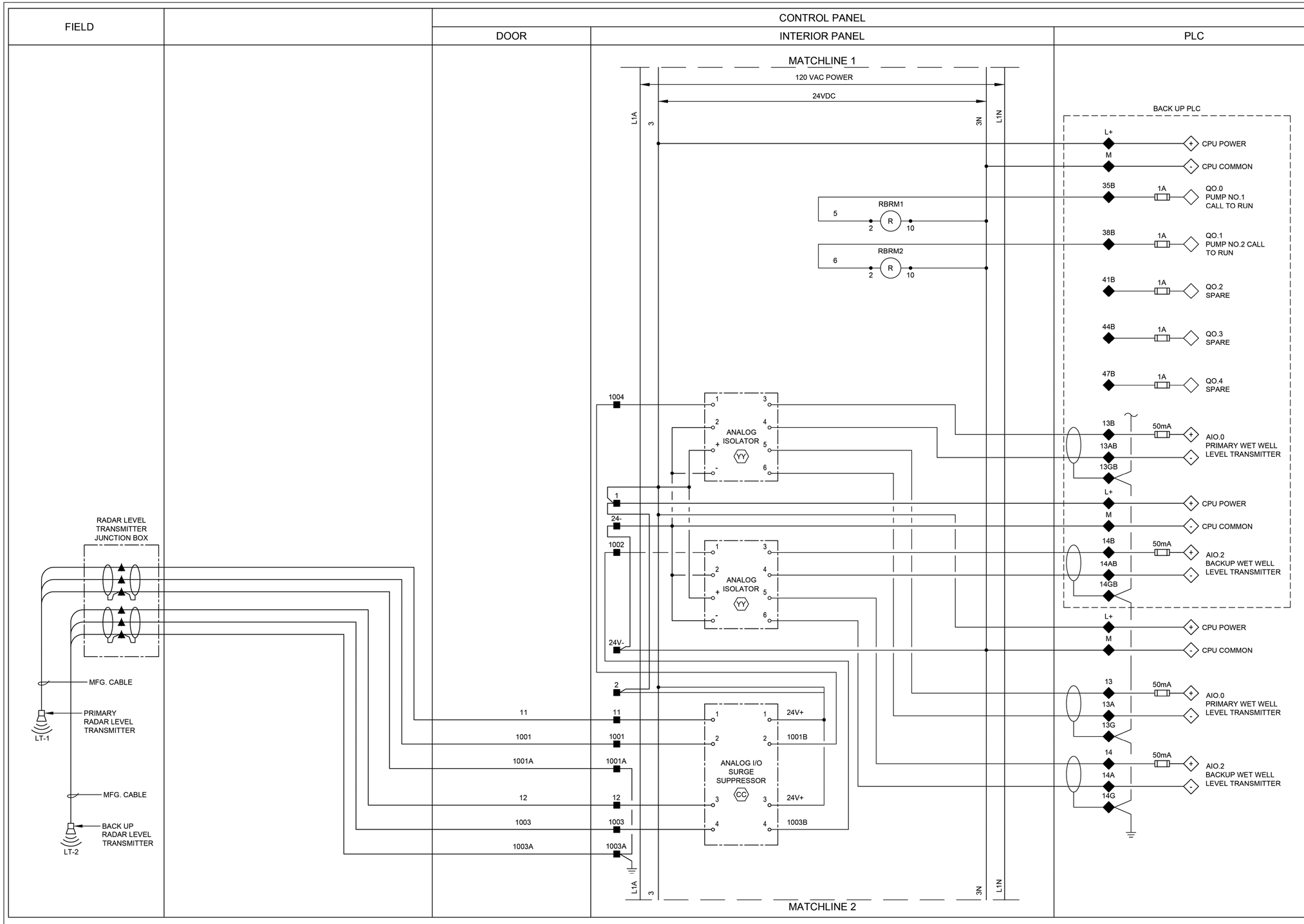

LEGEND

- △ DEVICE OR FIELD TERMINAL LOCATED AT MOTOR
- ✳ DEVICE OR FIELD TERMINAL LOCATED REMOTE
- □ DEVICE OR FIELD TERMINAL LOCATED AT MCC/POWER PANEL
- ■ FIELD TERMINAL LOCATED AT CONTROL PANEL
- ▲ REMOTE TERMINAL
- ● DEVICE TERMINAL NO.
- ◆ PLC INTERFACE TERMINAL

GENERAL NOTES:

1. NO ELECTRICAL MATERIAL, APPARATUS, DEVICES, APPLIANCES, FIXTURES, OR EQUIPMENT SHALL BE SOLD OR INSTALLED IN THE CITY UNLESS THEY ARE IN CONFORMANCE WITH THE PROVISIONS OF SECTION 508 CITY OF HOUSTON ELECTRICAL CODE, THE LAWS OF THE STATE OF TEXAS AND ANY APPLICABLE RULES AND REGULATIONS ISSUED UNDER THE AUTHORITY OF THE STATE STATUES. THE MAKER'S NAME, TRADEMARK, OR OTHER IDENTIFICATION SYMBOL SHALL BE PLACED ON ALL ELECTRICAL MATERIALS, APPARATUS, DEVICES, APPLIANCES, FIXTURES, AND EQUIPMENT USED OR INSTALLED UNDER THE PROVISIONS OF THIS CODE. ALL ELECTRICAL MATERIALS AND EQUIPMENT SHALL BE LISTED AND LABELED FOR THE INTENDED USE AND SHALL BE INCLUDED IN A LIST PUBLISHED BY AN APPROVAL AGENCY.

NO.	DATE	REVISION	APP.

FOR INTERIM REVIEW
ONLY NOT INTENDED FOR
PERMIT, BIDDING OR
CONSTRUCTION PURPOSES.
ENGINEER:
HOSS FOROUZAN
P.E. SERIAL NO.77748
12/15/2025

GAI
Gupta & Associates, Inc.
CONSULTING ENGINEERING
Registration No. F-2593
302 Dennis St.,
Houston, Texas 77006
Tel: 713-636-2936
Fax: 713-636-2987
email: hforouzan@gaiconsulting.com

IDS Engineering Group
13430 NW. Freeway
Suite 700
Houston, Tx. 77040
713.462.3178
TxEng Firm 2726
TxSurv Firm 10110700

CITY OF HOUSTON
HOUSTON PUBLIC WORKS

LIFT STATION RENEWAL AND REPLACEMENT FY 2023

MUD NO.67 LIFT STATION CONTROL PANEL CONTROL WIRING DIAGRAM—II

WBS NUMBER	FOR CITY OF HOUSTON USE ONLY
R-000267-0179-4	
DRAWING SCALE	
HORIZ: VERT:	
CITY OF HOUSTON PM	
NAWARAJ PANTA, P.E.	

DWG. NO.	SHEET NO.
MUD—I—9	222 OF 321

IDS JOB No. 0057-085-00

PLOTTED: 12/11/2025 8:14 PM

FILE PATH: O:\H8108_Lift Station Rehabilitation And Reconstruction (IDS)\6 Drawings\Instrumentation And Control\Working\MUD #67\H8108_MUD-I-10.dwg

FIELD	POWER PANEL	CONTROL PANEL		
		DOOR	INTERIOR PANEL	PLC

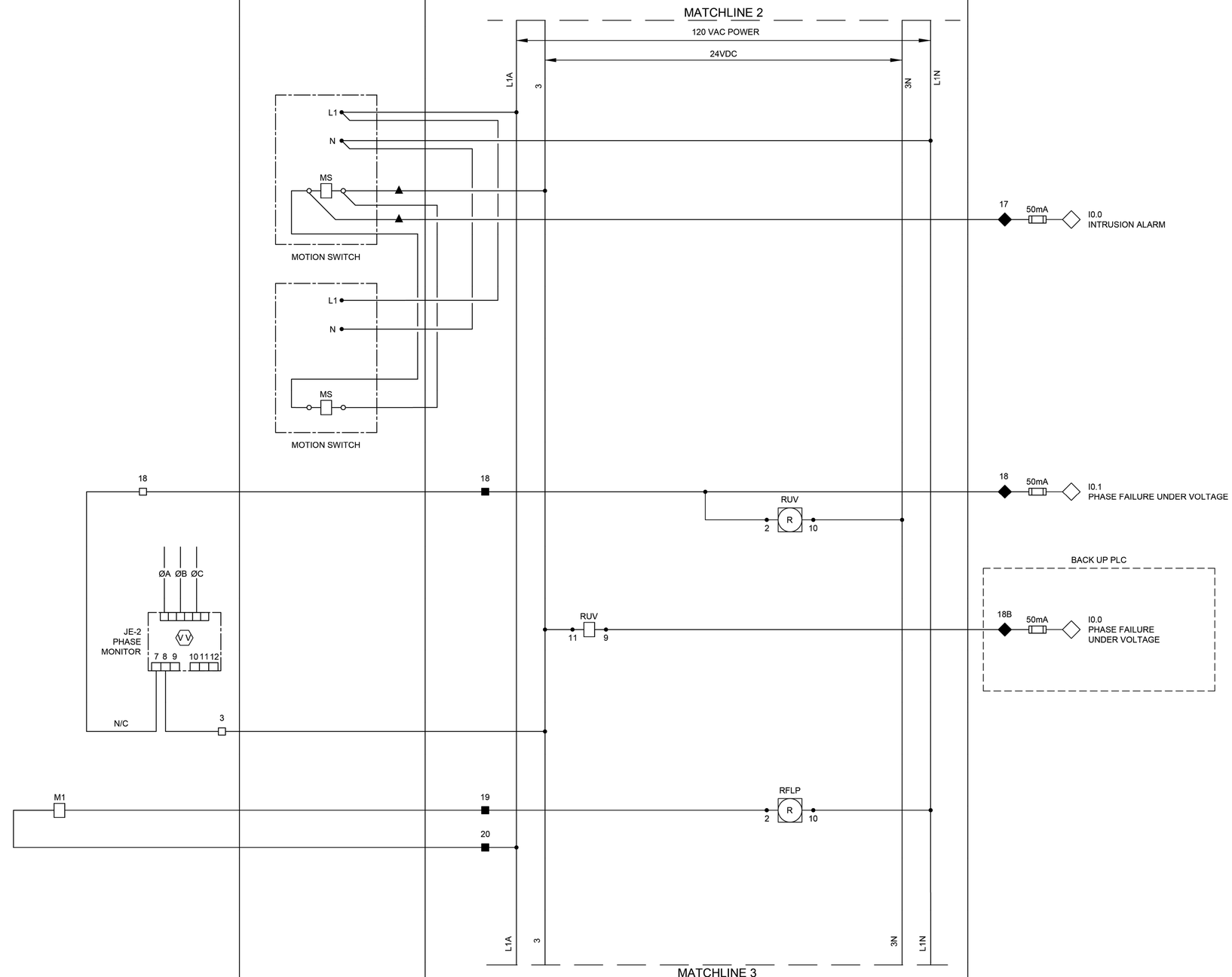

NO.	DATE	REVISION	APP.

GENERAL NOTES:

1. NO ELECTRICAL MATERIAL, APPARATUS, DEVICES, APPLIANCES, FIXTURES, OR EQUIPMENT SHALL BE SOLD OR INSTALLED IN THE CITY UNLESS THEY ARE IN CONFORMANCE WITH THE PROVISIONS OF SECTION 508 CITY OF HOUSTON ELECTRICAL CODE, THE LAWS OF THE STATE OF TEXAS AND ANY APPLICABLE RULES AND REGULATIONS ISSUED UNDER THE AUTHORITY OF THE STATE STATUES. THE MAKER'S NAME, TRADEMARK, OR OTHER IDENTIFICATION SYMBOL SHALL BE PLACED ON ALL ELECTRICAL MATERIALS, APPARATUS, DEVICES, APPLIANCES, FIXTURES, AND EQUIPMENT USED OR INSTALLED UNDER THE PROVISIONS OF THIS CODE. ALL ELECTRICAL MATERIALS AND EQUIPMENT SHALL BE LISTED AND LABELED FOR THE INTENDED USE AND SHALL BE INCLUDED IN A LIST PUBLISHED BY AN APPROVAL AGENCY.

FOR INTERIM REVIEW
ONLY NOT INTENDED FOR
PERMIT, BIDDING OR
CONSTRUCTION PURPOSES.
ENGINEER:
HOSS FOROUZAN
P.E. SERIAL NO.77748
12/15/2025

GAI
Gupta & Associates, Inc.
CONSULTING ENGINEERING
Registration No. F-2593
302 Dennis St.,
Houston, Texas 77006
Tel: 713-636-2936
Fax: 713-636-2987
email: hforouzan@gaiconsulting.com

IDS Engineering Group
13430 NW. Freeway
Suite 700
Houston, Tx. 77040
713.462.3178
TxEng Firm 2726
TxSurv Firm 10110700

CITY OF HOUSTON
HOUSTON PUBLIC WORKS

LIFT STATION RENEWAL
AND REPLACEMENT FY 2023

MUD NO.67 LIFT STATION CONTROL PANEL CONTROL WIRING DIAGRAM–III

WBS NUMBER	FOR CITY OF HOUSTON USE ONLY
R-000267-0179-4	
DRAWING SCALE	
HORIZ: VERT:	
CITY OF HOUSTON PM	
NAWARAJ PANTA, P.E.	
SHEET NO. 223 OF 321	

DWG. NO.
MUD–I–10

LEGEND

- △ DEVICE OR FIELD TERMINAL LOCATED AT MOTOR
- ✳ DEVICE OR FIELD TERMINAL LOCATED REMOTE
- □ DEVICE OR FIELD TERMINAL LOCATED AT MCC/POWER PANEL
- ■ FIELD TERMINAL LOCATED AT CONTROL PANEL
- ▲ REMOTE TERMINAL
- ● DEVICE TERMINAL NO.
- ◆ PLC INTERFACE TERMINAL

IDS JOB No. 0057-085-00

PLOTTED: 12/11/2025 8:14 PM

FILE PATH: O:\H8108_Lift Station Rehabilitation And Reconstruction (IDS)\6 Drawings\Instrumentation And Control\Working\MUD #67\H8108_MUD-I-11.dwg

FIELD	POWER PANEL	CONTROL PANEL		
		DOOR	INTERIOR PANEL	PLC

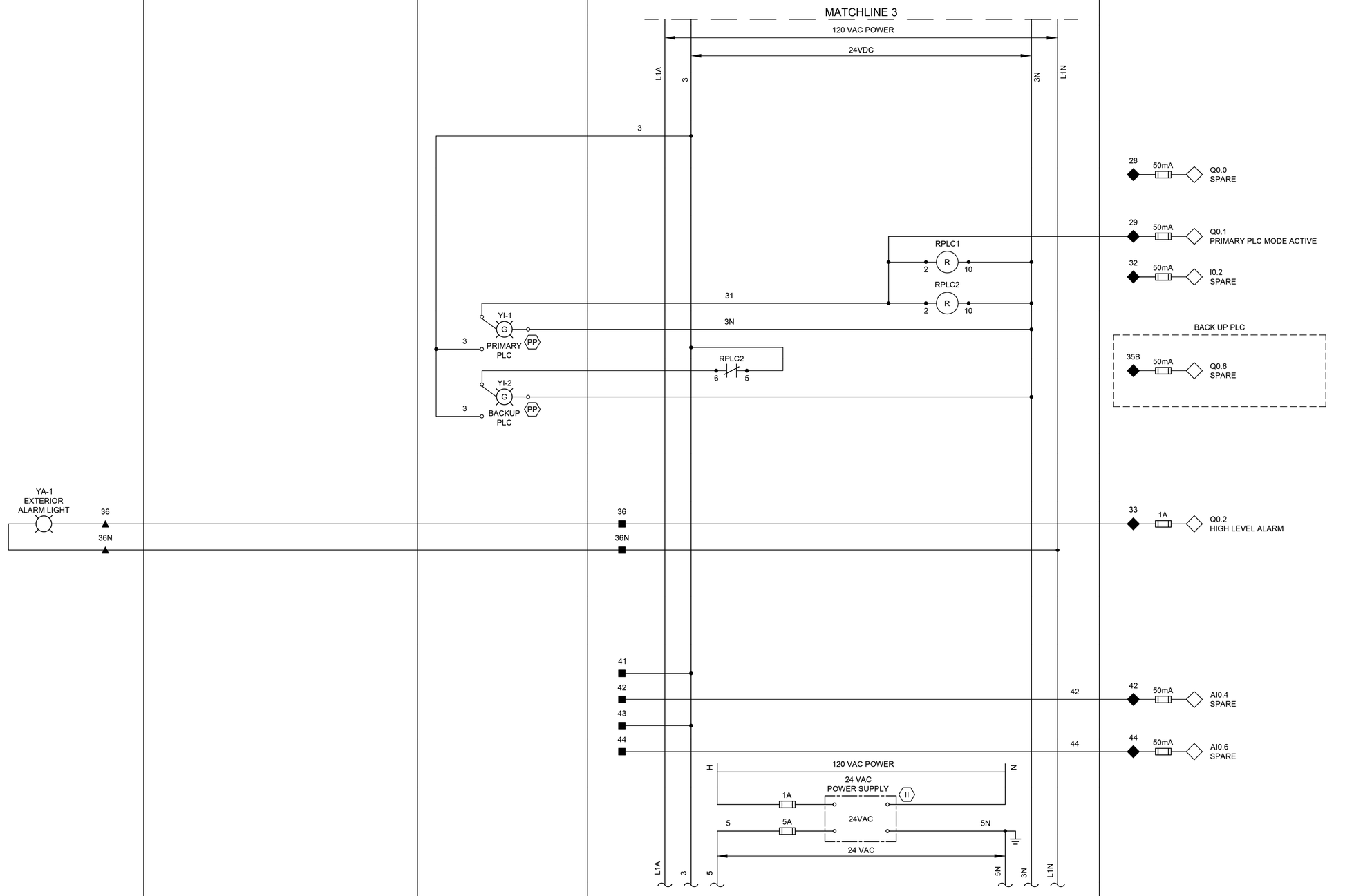

LEGEND

- △ DEVICE OR FIELD TERMINAL LOCATED AT MOTOR
- ✳ DEVICE OR FIELD TERMINAL LOCATED REMOTE
- □ DEVICE OR FIELD TERMINAL LOCATED AT MCC/POWER PANEL
- ■ FIELD TERMINAL LOCATED AT CONTROL PANEL
- ▲ REMOTE TERMINAL
- ● DEVICE TERMINAL NO.
- ◆ PLC INTERFACE TERMINAL

GENERAL NOTES:

1. NO ELECTRICAL MATERIAL, APPARATUS, DEVICES, APPLIANCES, FIXTURES, OR EQUIPMENT SHALL BE SOLD OR INSTALLED IN THE CITY UNLESS THEY ARE IN CONFORMANCE WITH THE PROVISIONS OF SECTION 508 CITY OF HOUSTON ELECTRICAL CODE, THE LAWS OF THE STATE OF TEXAS AND ANY APPLICABLE RULES AND REGULATIONS ISSUED UNDER THE AUTHORITY OF THE STATE STATUES. THE MAKER'S NAME, TRADEMARK, OR OTHER IDENTIFICATION SYMBOL SHALL BE PLACED ON ALL ELECTRICAL MATERIALS, APPARATUS, DEVICES, APPLIANCES, FIXTURES, AND EQUIPMENT USED OR INSTALLED UNDER THE PROVISIONS OF THIS CODE. ALL ELECTRICAL MATERIALS AND EQUIPMENT SHALL BE LISTED AND LABELED FOR THE INTENDED USE AND SHALL BE INCLUDED IN A LIST PUBLISHED BY AN APPROVAL AGENCY.

NO.	DATE	REVISION	APP.

FOR INTERIM REVIEW
ONLY NOT INTENDED FOR
PERMIT, BIDDING OR
CONSTRUCTION PURPOSES.
ENGINEER:
HOSS FOROUZAN
P.E. SERIAL NO.77748
12/15/2025

GAI
Gupta & Associates, Inc.
CONSULTING ENGINEERING
Registration No. F-2593
302 Dennis St.,
Houston, Texas 77006
Tel: 713-636-2936
Fax: 713-636-2987
email: hforouzan@gaiconsulting.com

IDS Engineering Group
13430 NW. Freeway
Suite 700
Houston, Tx. 77040
713.462.3178
TxEng Firm 2726
TxSurv Firm 10110700

CITY OF HOUSTON
HOUSTON PUBLIC WORKS

LIFT STATION RENEWAL
AND REPLACEMENT FY 2023

MUD NO.67 LIFT STATION CONTROL PANEL CONTROL WIRING DIAGRAM–IV

WBS NUMBER	FOR CITY OF HOUSTON USE ONLY
R-000267-0179-4	
DRAWING SCALE	
HORIZ: VERT:	
CITY OF HOUSTON PM	
NAWARAJ PANTA, P.E.	
DWG. NO. MUD–I–11	SHEET NO. 224 OF 321

IDS JOB No. 0057-085-00

PLOTTED: 12/11/2025 8:14 PM

FILE PATH: O:\H8108_Lift Station Rehabilitation And Reconstruction (IDS)\6 Drawings\Instrumentation And Control\Working\MUD #67\H8108_MUD-I-12.dwg

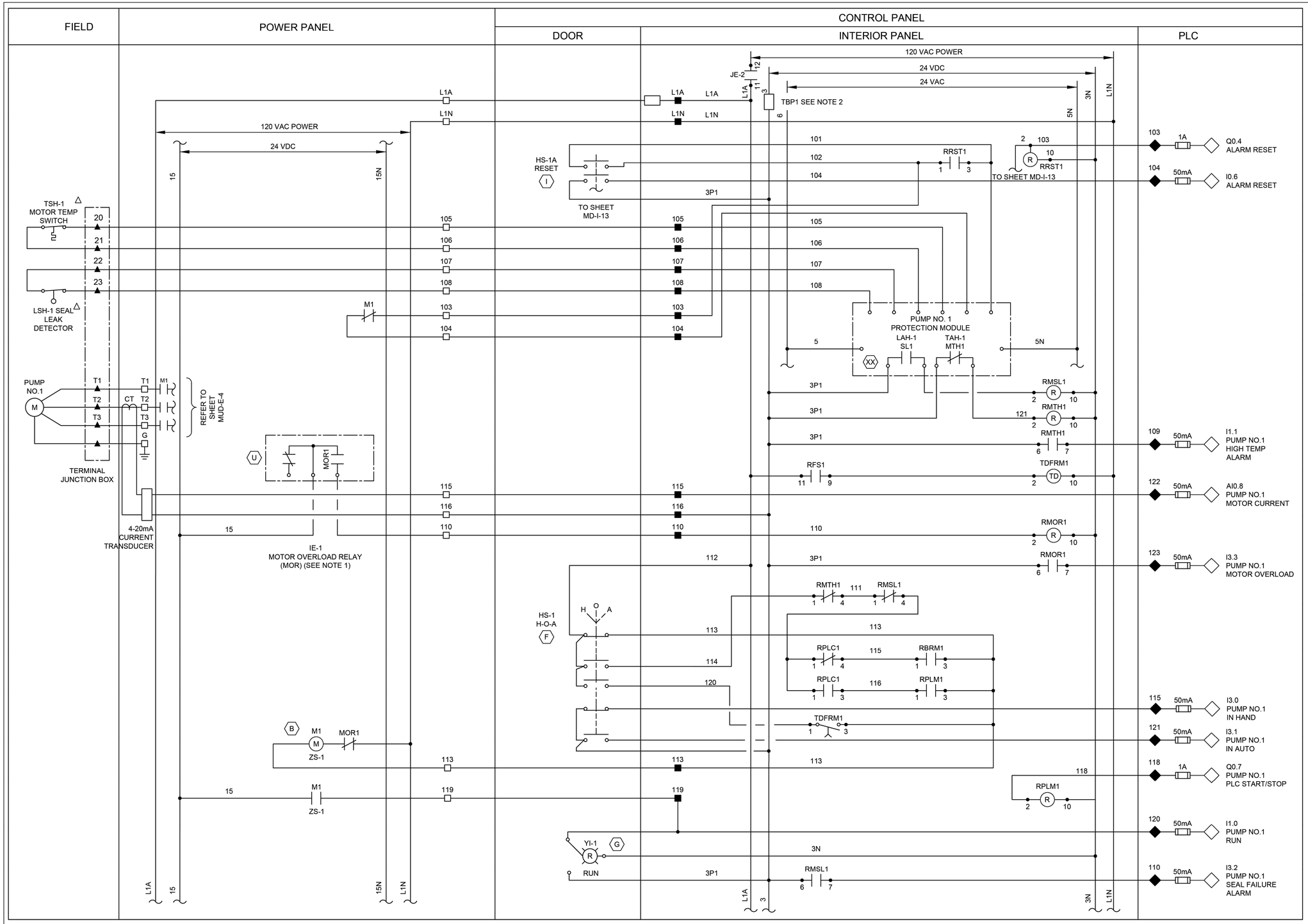

LEGEND

- △ DEVICE OR FIELD TERMINAL LOCATED AT MOTOR
- ✳ DEVICE OR FIELD TERMINAL LOCATED REMOTE
- □ DEVICE OR FIELD TERMINAL LOCATED AT MCC/POWER PANEL
- ■ FIELD TERMINAL LOCATED AT CONTROL PANEL
- ▲ REMOTE TERMINAL
- ● DEVICE TERMINAL NO.
- ◆ PLC INTERFACE TERMINAL

NOTES:

1. MOTOR OVERLOAD RELAY OUTPUT CONTACT SHOWN NORMALLY CLOSED WHEN RELAY IS DE-ENERGIZED, OPEN WHEN ENERGIZED, AND CLOSED WHEN IN ALARM. VERIFY OPERATION OF RELAY PROVIDED AND ADJUST CONNECTION OF RMOR AUXILIARY RELAYS.
2. FUSED TERMINAL ON TERMINAL BLOCK TB4 SEE CONTROL POWER AND COMMUNICATION WIRING DIAGRAM DRAWING NO. MUD-I-3.
3. ALL FLOAT CONTROL CIRCUIT WIRES COLOR SHALL BE YELLOW.

GENERAL NOTES:

1. NO ELECTRICAL MATERIAL, APPARATUS, DEVICES, APPLIANCES, FIXTURES, OR EQUIPMENT SHALL BE SOLD OR INSTALLED IN THE CITY UNLESS THEY ARE IN CONFORMANCE WITH THE PROVISIONS OF SECTION 508 CITY OF HOUSTON ELECTRICAL CODE, THE LAWS OF THE STATE OF TEXAS AND ANY APPLICABLE RULES AND REGULATIONS ISSUED UNDER THE AUTHORITY OF THE STATE STATUES. THE MAKER'S NAME, TRADEMARK, OR OTHER IDENTIFICATION SYMBOL SHALL BE PLACED ON ALL ELECTRICAL MATERIALS, APPARATUS, DEVICES, APPLIANCES, FIXTURES, AND EQUIPMENT USED OR INSTALLED UNDER THE PROVISIONS OF THIS CODE. ALL ELECTRICAL MATERIALS AND EQUIPMENT SHALL BE LISTED AND LABELED FOR THE INTENDED USE AND SHALL BE INCLUDED IN A LIST PUBLISHED BY AN APPROVAL AGENCY.

NO.	DATE	REVISION	APP.

FOR INTERIM REVIEW
ONLY NOT INTENDED FOR
PERMIT, BIDDING OR
CONSTRUCTION PURPOSES.
ENGINEER:
HOSS FOROUZAN
P.E. SERIAL NO.77748
12/15/2025

GAI
Gupta & Associates, Inc.
CONSULTING ENGINEERING
Registration No. F-2593
302 Dennis St.,
Houston, Texas 77006
Tel: 713-636-2936
Fax: 713-636-2987
email: hforouzan@gaiconsulting.com

IDS Engineering Group
13430 NW. Freeway
Suite 700
Houston, Tx. 77040
713.462.3178
TxEng Firm 2726
TxSurv Firm 10110700

CITY OF HOUSTON
HOUSTON PUBLIC WORKS

LIFT STATION RENEWAL AND REPLACEMENT FY 2023

MUD NO.67 LIFT STATION PUMP NO.1 CONTROL WIRING DIAGRAM

WBS NUMBER	FOR CITY OF HOUSTON USE ONLY
R-000267-0179-4	
DRAWING SCALE	
HORIZ: VERT:	
CITY OF HOUSTON PM	
NAWARAJ PANTA, P.E.	
DWG. NO. MUD-I-12	SHEET NO. 225 OF 321

IDS JOB No. 0057-085-00

PLOTTED: 12/11/2025 8:14 PM

FIELD | POWER PANEL | CONTROL PANEL — DOOR | CONTROL PANEL — INTERIOR PANEL | PLC

120 VAC POWER
24 VDC
24 VAC
15
15N
L1A
3
7
TBP2 SEE NOTE 2
3N
5N
L1N
FROM SHEET MD-I-12
HS-1A RESET
RRST2
M2
TSH-2 MOTOR TEMP SWITCH
LSH-2 SEAL LEAK DETECTOR
20
21
22
23
200
PUMP NO. 2 PROTECTION MODULE
LAH-2 SL2
TAH-2 MTH2
5
PUMP NO.2
T1 T2 T3 G
CT
REFER TO SHEET MUD-E-4
TERMINAL JUNCTION BOX
MOR2
RMSL2
RMTH2
RFS2
TDFRM2
RMOR2
RPLM2
4-20mA CURRENT TRANSDUCER
IE-2 MOTOR OVERLOAD RELAY (MOR) (SEE NOTE 1)
HS-2 H-O-A
RMTH2
RMSL2
RPLC1
RBRM2
RPLM2
RFLP
YI-2
RUN
ZS-2

209	50mA	I1.3 PUMP NO.2 HIGH TEMP ALARM
222	50mA	AI.0 PUMP NO.2 MOTOR CURRENT
223	50mA	I3.7 PUMP NO.2 MOTOR OVERLOAD ALARM
210	50mA	I3.5 PUMP NO.2 IN HAND
211	50mA	I3.4 PUMP NO.2 IN AUTO
218	1A	Q1.0 PUMP NO.2 PLC START/STOP
220	50mA	I1.2 PUMP NO.2 RUN
210	50mA	I3.6 PUMP NO.2 SEAL FAILURE ALARM

NOTES:

1. MOTOR OVERLOAD RELAY OUTPUT CONTACT SHOWN NORMALLY CLOSED WHEN RELAY IS DE-ENERGIZED, OPEN WHEN ENERGIZED, AND CLOSED WHEN IN ALARM. VERIFY OPERATION OF RELAY PROVIDED AND ADJUST CONNECTION OF RMOR AUXILIARY RELAYS.
2. FUSED TERMINAL ON TERMINAL BLOCK TB4 SEE CONTROL POWER AND COMMUNICATION WIRING DIAGRAM DRAWING NO. MUD-I-3.
3. ALL FLOAT CONTROL CIRCUIT WIRES COLOR SHALL BE YELLOW.

GENERAL NOTES:

1. NO ELECTRICAL MATERIAL, APPARATUS, DEVICES, APPLIANCES, FIXTURES, OR EQUIPMENT SHALL BE SOLD OR INSTALLED IN THE CITY UNLESS THEY ARE IN CONFORMANCE WITH THE PROVISIONS OF SECTION 508 CITY OF HOUSTON ELECTRICAL CODE, THE LAWS OF THE STATE OF TEXAS AND ANY APPLICABLE RULES AND REGULATIONS ISSUED UNDER THE AUTHORITY OF THE STATE STATUES. THE MAKER'S NAME, TRADEMARK, OR OTHER IDENTIFICATION SYMBOL SHALL BE PLACED ON ALL ELECTRICAL MATERIALS, APPARATUS, DEVICES, APPLIANCES, FIXTURES, AND EQUIPMENT USED OR INSTALLED UNDER THE PROVISIONS OF THIS CODE. ALL ELECTRICAL MATERIALS AND EQUIPMENT SHALL BE LISTED AND LABELED FOR THE INTENDED USE AND SHALL BE INCLUDED IN A LIST PUBLISHED BY AN APPROVAL AGENCY.

LEGEND

- △ DEVICE OR FIELD TERMINAL LOCATED AT MOTOR
- ✳ DEVICE OR FIELD TERMINAL LOCATED REMOTE
- □ DEVICE OR FIELD TERMINAL LOCATED AT MCC/POWER PANEL
- ■ FIELD TERMINAL LOCATED AT CONTROL PANEL
- ▲ REMOTE TERMINAL
- ● DEVICE TERMINAL NO.
- ◆ PLC INTERFACE TERMINAL

NO.	DATE	REVISION	APP.

FOR INTERIM REVIEW
ONLY NOT INTENDED FOR
PERMIT, BIDDING OR
CONSTRUCTION PURPOSES.
ENGINEER:
HOSS FOROUZAN
P.E. SERIAL NO.77748
12/15/2025

GAI
Gupta & Associates, Inc.
CONSULTING ENGINEERING
Registration No. F-2593
302 Dennis St.,
Houston, Texas 77006
Tel: 713-636-2936
Fax: 713-636-2987
email: hforouzan@gaiconsulting.com

IDS Engineering Group
13430 NW. Freeway
Suite 700
Houston, Tx. 77040
713.462.3178
TxEng Firm 2726
TxSurv Firm 10110700

CITY OF HOUSTON
HOUSTON PUBLIC WORKS

LIFT STATION RENEWAL AND REPLACEMENT FY 2023

MUD NO.67 LIFT STATION PUMP NO.2 CONTROL WIRING DIAGRAM

WBS NUMBER	FOR CITY OF HOUSTON USE ONLY
R-000267-0179-4	
DRAWING SCALE	
HORIZ: VERT:	
CITY OF HOUSTON PM	
NAWARAJ PANTA, P.E.	
DWG. NO. MUD–I–13	SHEET NO. 226 OF 321

IDS JOB No. 0057-085-00

FILE PATH: O:\H8108_Lift Station Rehabilitation And Reconstruction (IDS)\6 Drawings\Instrumentation And Control\Working\MUD #67\H8108_MUD–I–13.dwg

PLOTTED: 12/17/2025 10:20 AM

LEGEND

- EXISTING CONCRETE PAVEMENT
- REMOVE EXISTING CONCRETE PAVEMENT
- SITE DEMOLITION
- EXISTING CONCRETE SIDEWALK
- REMOVE EXISTING CONCRETE SIDEWALK
- ABANDON ANY UNDERGROUND UTILITY
- REMOVE ANY UNDERGROUND UTILITY
- REMOVE EXISTING FENCE
- FILTER FABRIC FENCE

NOTES:

1. EXISTING LIFT STATION WET WELL TO REMAIN.
2. SEE ELECTRICAL PLANS ON SHEETS WDF-E-01-WDF-I-15 FOR ELECTRICAL IMPROVEMENTS.
3. CONTRACTOR SHALL COORDINATE WITH CENTERPOINT ENERGY TO DE-ENERGIZE THE LIFT STATION AND OTHER ELECTRICAL EQUIPMENT ON SITE.
4. CONTRACTOR SHALL PROTECT THE EXISTING CONDUIT AND CABLE. IF CABLE OR CONDUIT IS DAMAGED CONTRACTOR SHALL REPLACE AT NO ADDITIONAL COST TO THE CITY.
5. REMOVE DAMAGED AND CRACKED SIDEWALK.
6. REMOVE THE EXISTING FORCE MAIN TO THE NEAREST PIPE JOINT AND TIE PROP FORCE MAIN TO EXIST. USE RESTRAINED JOINTS.
7. THE EXISTING FORCE MAIN IS ASSUMED TO BE DUCTILE IRON BELL AND SPIGOT AND SHALL BE FIELD VERIFIED BY THE CONTRACTOR.

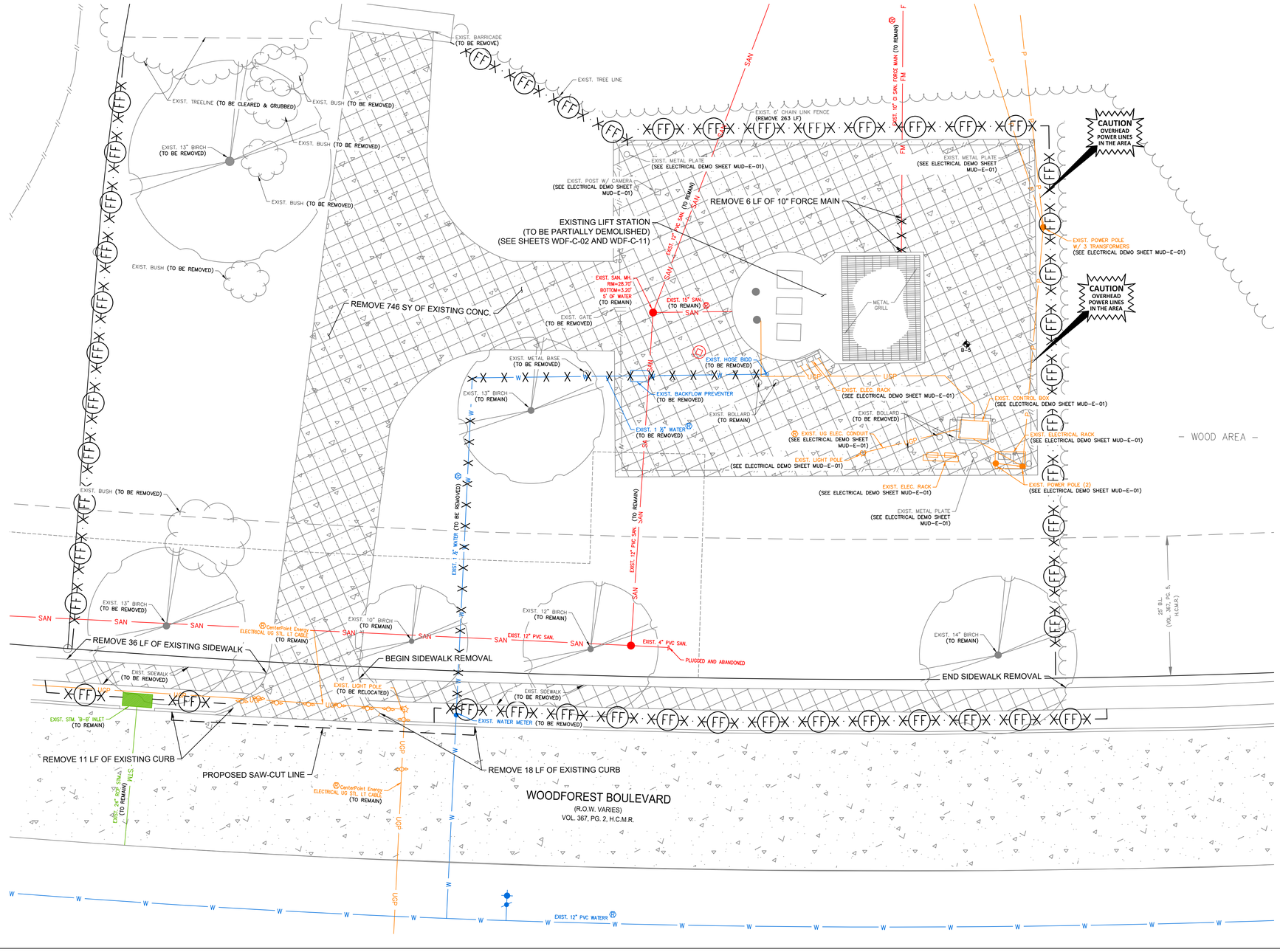

10' 0' 10'
SCALE
1"=10'

BENCHMARK:

FLOODPLAIN REFERENCE MARK NUMBER 150200 IS AN ALUMINUM ROD STAMPED 150200 LOCATED ON THE NORTH SIDE OF WOODFOREST DR APPROXIMATELY 500 FEET FROM THE INTERSECTION OF MAXEY ROAD IN KEY MAP NO. 496C IN THE GREENS BAYOU WATERSHED.

ELEV. 32.40 FEET NAVD 1988, 2001 ADJUSTMENT

FLOODPLAIN NOTE:

FLOODPLAIN REFERENCE MARK NUMBER 150200 IS AN ALUMINUM ROD STAMPED 150200 LOCATED ON THE NORTH SIDE OF WOODFOREST DR APPROXIMATELY 500 FEET EAST FROM THE INTERSECTION OF MAXEY RD IN KEY MAP NO. 496C IN THE GREENS BAYOU WATERSHED

ELEV. 32.40 FEET NAVD 1988, 2001 ADJUSTMENT
100-YR ELEV. 25.00'
500-YR ELEV. 28.50'
FIRM PANEL: 48201C0715M

T.B.M #46:

SET "X" CUT IN CONCRETE ON MEDIAN NOSE ON WOODFOREST BLVD ABOUT 0.3 MILE WEST FORM THE INTERSECTION OF NORMANDY ST
ELEV.= 29.98 FT.

EXISTING UTILITY NOTE:

EXISTING UNDERGROUND UTILITY INFORMATION (TYPE, SIZE & OWNERSHIP) ARE SHOWN APPROXIMATELY BASED ON THE AVAILABLE RECORD DRAWINGS AND FIELD VERIFICATION (WHERE FEASIBLE) WITHOUT PROBING AND EXCAVATION. NO WARRANTY IS MADE AS TO THE ACCURACY OR COMPLETENESS OF UTILITY LOCATION SHOWN ON THE DRAWING. CAUTION SHOULD BE EXERCISED WHEN EXCAVATING OR BORE AND JACKING IN THE VICINITY OF UNDERGROUND UTILITIES. OWNERS OF THE UTILITIES SHOULD BE NOTIFIED PRIOR TO SUCH ACTIVITIES. CALL UTILITY COORDINATING COMMITTEE AT 713-223-4567, AT LEAST 48 HOURS PRIOR TO EXCAVATING IN THE STREET RIGHT-OF-WAY.

NO.	DATE	REVISION	APP.

NOTICE:
FOR YOUR SAFETY, YOU ARE REQUIRED BY TEXAS LAW TO CALL 811 AT LEAST 48 HOURS BEFORE YOU DIG SO THAT UNDERGROUND LINES CAN BE MARKED. THIS SIGNATURE DOES NOT FULFILL YOUR OBLIGATION TO CALL 811

VERIFICATION OF PRIVATE UTILITY LINES

Date

CenterPoint Energy natural gas utilities shown. (Gas service lines are not shown). This signature not be used for conflict verification.

Signature valid for six months.

Date

CenterPoint Energy/UNDERGROUND Electrical Facilities Verification ONLY. (This signature verifies existing underground facilities – not to be used for conflict verification)

Signature valid for six months.

Date

Approved for AT&T underground conduit facilities only.
Signature valid for one year.

IDS Engineering Group
13430 NW. Freeway, Suite 700
Houston, Tx. 77040
713.462.3178
TxEng Firm 2726 | TxSurv Firm 10110700

SURVEYED BY: KUO & ASSOCIATES, INC.
TBPE FIRM #F-4578; TBPLS FIRM #1007560

THIS DOCUMENT IS RELEASED FOR THE PURPOSE OF REVIEW UNDER THE AUTHORITY OF MARCEL KHOUW, P.E. 101807 ON 12/17/2025. IT IS NOT TO BE USED FOR CONSTRUCTION PURPOSES.

CITY OF HOUSTON
HOUSTON PUBLIC WORKS

LIFT STATION RENEWAL AND REPLACEMENT FY 2023

WOODFOREST LIFT STATION SITE DEMOLITION PLAN AND SWPPP

WBS NUMBER	FOR CITY OF HOUSTON USE ONLY
R-000267-0179-4	
DRAWING SCALE	
HORIZ: 1" = 10' VERT: N/A	
CITY OF HOUSTON PM	
NAWARAJ PANTA, P.E.	

DWG. NO.	SHEET NO.
WDF-C-01	SHEET NO. 227 OF 321

FILE PATH: \\ideg.com\FS\Projects\0000\005708500 CoH Lift Stations - FY 2023\CAD\DWG\PRODUCTION\227-WOODFOREST SITE PLAN AND DEMO.dwg

PLOTTED: 12/17/2025 8:31 AM

LIFT STATION DEMOLITION AND ABANDONMENT NOTES:

1. THIS DRAWING IS A REPRODUCTION OF THE EXISTING LIFT STATION CONSTRUCTION DRAWINGS AND INTENDED TO PROVIDE GENERAL INFORMATION FOR STATION DEMOLITION. THE CONTRACTOR IS RESPONSIBLE FOR DETERMINING THE ACTUAL WORK REQUIRED FOR DEMOLITION AND REMOVAL OF STRUCTURAL, MECHANICAL, AND ELECTRICAL COMPONENTS. A CLAIM FOR CHANGED CONDITIONS BETWEEN THE EXISTING CONDITIONS AND THE RECORD DRAWINGS WILL NOT BE CONSIDERED.
2. NO DEMOLITION IS TO BE PERFORMED UNTIL BYPASS PUMPING HAS BEEN INSTALLED AND OPERATIONAL.
3. THE CITY OF HOUSTON WILL RETAIN SALVAGE RIGHTS TO ALL MATERIAL AND EQUIPMENT. ALL MATERIALS AND EQUIPMENT RETAINED BY THE CITY OF HOUSTON SHALL BE DELIVERED TO A POINT DESIGNATED BY CITY OF HOUSTON REPRESENTATIVE (MR. ARTURO CARRILLO 832-395-3558). ANY MATERIAL OR EQUIPMENT NOT RETAINED BY THE CITY OF HOUSTON SHALL BE REMOVED FROM THE SITE AND DISPOSED OF BY THE CONTRACTOR IN ACCORDANCE WITH APPLICABLE REGULATIONS.
4. WHEN REMOVING EXISTING PUMPS, CONTRACTOR SHALL LEAVE AS MUCH WIRE/CABLE AS POSSIBLE IN ORDER FOR THE CITY TO REUSE THE PUMPS.
5. CONTRACTOR SHALL NOTIFY TEXAS DEPARTMENT OF HEALTH (DEPARTMENT) ON A FORM SPECIFIED BY THE DEPARTMENT OF ANY ASBESTOS ABATEMENT ACTIVITY, RENOVATION OR OPERATIONS AND MAINTENANCE ACTIVITY AFFECTING ASBESTOS-CONTAINING BUILDING MATERIALS, OR ANY DEMOLITION IN FACILITIES OR PUBLIC BUILDINGS.
6. CONCRETE SLAB AND WALLS INDICATED ON THIS PLAN SHALL BE REMOVED TO 5 FEET BELOW FINISHED GRADE AS PER SPECIFICATION SECTION 02220.
7. ALL REMAINING WALL OPENINGS IN THE VALVE VAULT SHALL BE SEALED WITH NON-SHRINK GROUT.
8. CONTRACTOR SHALL BACKFILL THE ABANDONED AND DEMOLISHED VALVE VAULT. BACKFILL SHALL BE FLOWABLE FILL AND COMPACTED PROPERLY UP TO THE PROPOSED CONCRETE DISCHARGE ASSEMBLY PAD.
9. THE CONTRACTOR SHALL COORDINATE WITH CENTERPOINT ENERGY TO TEMPORARILY DISCONNECT ELECTRICAL POWER AS NEEDED.
10. THE EXISTING WET WELL SHALL BE CLEANED OF ALL DEBRIS, WASTEWATER AND OTHER RESIDUES BY AN APPROVED CITY OF HOUSTON DISPOSAL CONTRACTOR.
11. THE CONTRACTOR SHALL DISPOSE OF ANY LIQUID OR SOLID WASTE FOUND IN THE WET WELL AT A DISPOSAL FACILITY LICENSED AND APPROVED BY THE STATE OF TEXAS. THE CONTRACTOR SHALL BE RESPONSIBLE FOR THE COST OF TRANSPORTATION, DISPOSAL AND TESTING REQUIRED BY STATE AND FEDERAL REGULATORY AGENCIES, AND BY THE DISPOSAL FACILITY.
12. PRIOR TO THE CLEAN-OUT AND CLEANING OF THE EXISTING LIFT STATION WET WELL, CONTRACTOR TO SUBMIT PROOF TO C.O.H. CONSTRUCTION PM THAT TRANSPORTER/HAULER TO BE USED FOR THE TRANSPORT OF THE CONTENTS OF THE WET WELL (I.E., SOLIDS, GRIT, SEWAGE SLUDGE, AND DOMESTIC SLUDGE, ETC.) IS REGISTERED BY THE TEXAS COMMISSION ON ENVIRONMENTAL QUALITY (TCEQ) AS A SLUDGE TRANSPORTER AND THE TRANSPORTER'S REGISTRATION IS CURRENT AND VALID DURING THE PERIOD OF PERFORMANCE.
13. CONTRACTOR SHALL SUBMIT PROOF OF SUBMISSION OF REQUIRED ASBESTOS/DEMOLITION NOTIFICATION FORM TO THE TEXAS DEPARTMENT OF STATE HEALTH SERVICES TO C.O.H. CONSTRUCTION PM. THE NOTIFICATION TO THE STATE MUST BE PROVIDED A MINIMUM OF 10 DAYS PRIOR TO THE STARTUP OF ANY DEMOLITION ACTIVITIES AT THE SITE.
14. CONTRACTOR SHALL OBTAIN CITY OF HOUSTON DEMOLITION PERMIT (SEE FORM CE 1075 REV. 01/01/2015 FOR GUIDELINES) OR SUBMIT PROOF OF NON-APPLICABILITY TO C.O.H. CONSTRUCTION PROJECT MANAGER PRIOR TO THE STARTUP OF DEMOLITION ACTIVITIES AT THE SITE. THE CONTRACTOR SHALL OBTAIN ANY STATE DEMOLITION PERMITS REQUIRED.

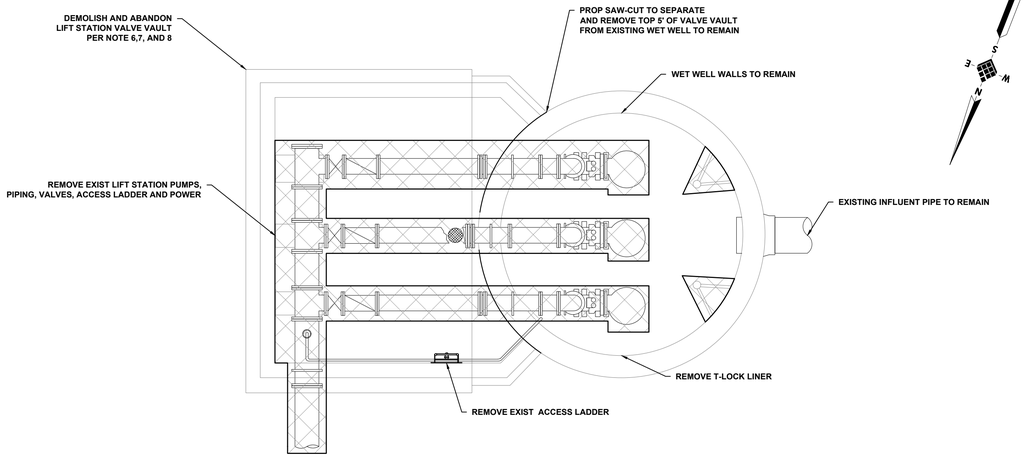

LIFT STATION PLAN

N.T.S.

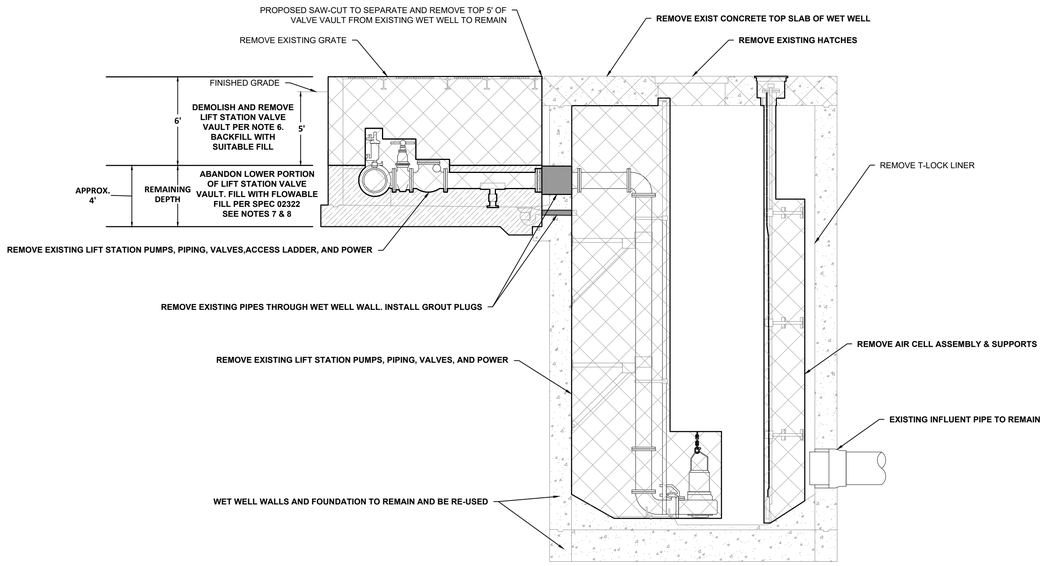

LIFT STATION SECTION

N.T.S.

LEGEND

DEMOLITION AREA

ABANDON VALVE VAULT

NO.	DATE	REVISION	APP.

IDS Engineering Group
13430 NW. Freeway, Suite 700
Houston, Tx. 77040
713.462.3178
TxEng Firm 2726 | TxSurv Firm 10110700

SURVEYED BY: KUO & ASSOCIATES, INC.
TBPE FIRM #F-4578; TBPLS FIRM #1007560

THIS DOCUMENT IS RELEASED FOR THE PURPOSE OF REVIEW UNDER THE AUTHORITY OF MARCEL KHOUW, P.E. 101807 ON 12/17/2025. IT IS NOT TO BE USED FOR CONSTRUCTION PURPOSES.

CITY OF HOUSTON
HOUSTON PUBLIC WORKS

LIFT STATION RENEWAL AND REPLACEMENT FY 2023

WOODFOREST LIFT STATION SECTION DEMOLITION

WBS NUMBER	FOR CITY OF HOUSTON USE ONLY
R-000267-0179-4	
DRAWING SCALE	
HORIZ: AS NOTED VERT: N/A	
CITY OF HOUSTON PM	
NAWARAJ PANTA, P.E.	

DWG. NO. WDF-C-02 SHEET NO. 228 OF 321

FILE PATH: \\idseg.com\FS\Projects\0000\005708500 CoH Lift Stations - FY 2023\CAD\DWG\PRODUCTION\228-WOODFOREST SECTION DEMO.dwg

PLOTTED: 12/17/2025 10:20 AM

FILE PATH: \\idseg.com\FS\Projects\0000\005708500 CoH Lift Stations - FY 2023\CAD\DWG\PRODUCTION\229-WOODFOREST PROP SITE PLAN.dwg

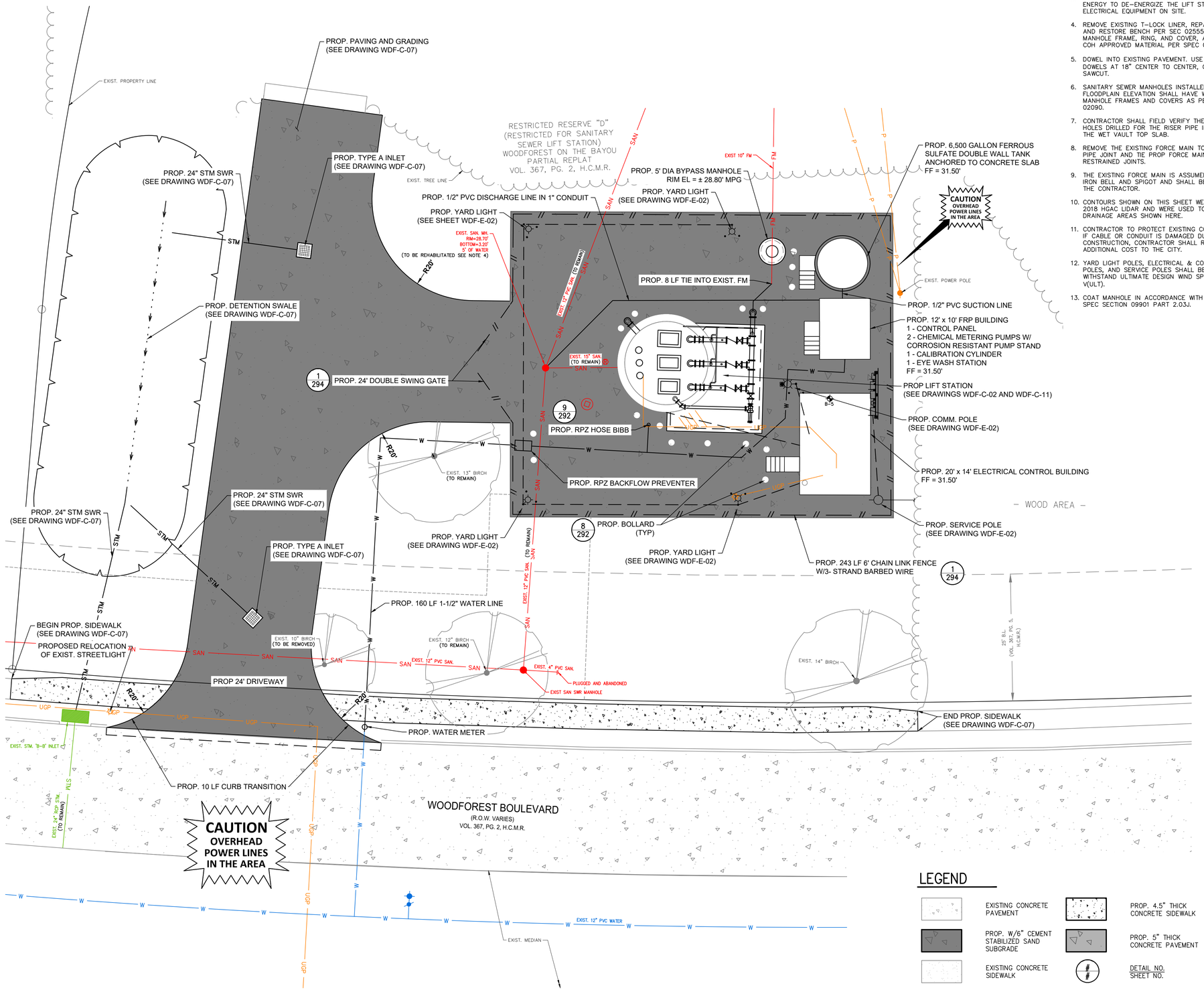

NOTES:

1. EXISTING LIFT STATION WET WELL TO REMAIN.
2. SEE ELECTRICAL PLANS ON SHEETS WDF-E-01-WDF-I-15 FOR ELECTRICAL IMPROVEMENTS.
3. CONTRACTOR SHALL COORDINATE WITH CENTERPOINT ENERGY TO DE-ENERGIZE THE LIFT STATION AND OTHER ELECTRICAL EQUIPMENT ON SITE.
4. REMOVE EXISTING T-LOCK LINER, REPAIR MANHOLE WALL AND RESTORE BENCH PER SEC 02555, REPLACE MANHOLE FRAME, RING, AND COVER, AND RECOAT WITH A COH APPROVED MATERIAL PER SPEC 09901
5. DOWEL INTO EXISTING PAVEMENT. USE 24" x #4 SMOOTH DOWELS AT 18" CENTER TO CENTER, CENTERED ON SAWCUT.
6. SANITARY SEWER MANHOLES INSTALLED BELOW THE FLOODPLAIN ELEVATION SHALL HAVE WATERTIGHT MANHOLE FRAMES AND COVERS AS PER SPECIFICATION 02090.
7. CONTRACTOR SHALL FIELD VERIFY THE LOCATION OF THE HOLES DRILLED FOR THE RISER PIPE INSTALLATION THRU THE WET VAULT TOP SLAB.
8. REMOVE THE EXISTING FORCE MAIN TO THE NEAREST PIPE JOINT AND TIE PROP FORCE MAIN TO EXIST. USE RESTRAINED JOINTS.
9. THE EXISTING FORCE MAIN IS ASSUMED TO BE DUCTILE IRON BELL AND SPIGOT AND SHALL BE FIELD VERIFIED BY THE CONTRACTOR.
10. CONTOURS SHOWN ON THIS SHEET WERE DERIVED FROM 2018 HGAC LIDAR AND WERE USED TO CREATE EXISTING DRAINAGE AREAS SHOWN HERE.
11. CONTRACTOR TO PROTECT EXISTING CONDUIT AND CABLE. IF CABLE OR CONDUIT IS DAMAGED DURING CONSTRUCTION, CONTRACTOR SHALL REPLACE AT NO ADDITIONAL COST TO THE CITY.
12. YARD LIGHT POLES, ELECTRICAL & COMMUNICATION POLES, AND SERVICE POLES SHALL BE ABLE TO WITHSTAND ULTIMATE DESIGN WIND SPEED OF 130 MPH, V(ULT).
13. COAT MANHOLE IN ACCORDANCE WITH SYSTEM 108 PER SPEC SECTION 09901 PART 2.03J.



10' 0' 10'
SCALE
1"=10'

BENCHMARK:

FLOODPLAIN REFERENCE MARK NUMBER 150200 IS AN ALUMINUM ROD STAMPED 150200 LOCATED ON THE NORTH SIDE OF WOODFOREST DR APPROXIMATELY 500 FEET FROM THE INTERSECTION OF MAXEY ROAD IN KEY MAP NO. 496C IN THE GREENS BAYOU WATERSHED.

ELEV. 32.40 FEET NAVD 1988, 2001 ADJUSTMENT

FLOODPLAIN NOTE:

FLOODPLAIN REFERENCE MARK NUMBER 150200 IS AN ALUMINUM ROD STAMPED 150200 LOCATED ON THE NORTH SIDE OF WOODFOREST DR APPROXIMATELY 500 FEET EAST FROM THE INTERSECTION OF MAXEY RD IN KEY MAP NO. 496C IN THE GREENS BAYOU WATERSHED

ELEV. 32.40 FEET NAVD 1988, 2001 ADJUSTMENT
100-YR ELEV. 25.00'
500-YR ELEV. 28.50'
FIRM PANEL: 48201C0715M

T.B.M #46:

SET "X" CUT IN CONCRETE ON MEDIAN NOSE ON WOODFOREST BLVD ABOUT 0.3 MILE WEST FORM THE INTERSECTION OF NORMANDY ST
ELEV.= 29.98 FT.

EXISTING UTILITY NOTE:

EXISTING UNDERGROUND UTILITY INFORMATION (TYPE, SIZE & OWNERSHIP) ARE SHOWN APPROXIMATELY BASED ON THE AVAILABLE RECORD DRAWINGS AND FIELD VERIFICATION (WHERE FEASIBLE) WITHOUT PROBING AND EXCAVATION. NO WARRANTY IS MADE AS TO THE ACCURACY OR COMPLETENESS OF UTILITY LOCATION SHOWN ON THE DRAWING. CAUTION SHOULD BE EXERCISED WHEN EXCAVATING OR BORE AND JACKING IN THE VICINITY OF UNDERGROUND UTILITIES. OWNERS OF THE UTILITIES SHOULD BE NOTIFIED PRIOR TO SUCH ACTIVITIES. CALL UTILITY COORDINATING COMMITTEE AT 713-223-4567, AT LEAST 48 HOURS PRIOR TO EXCAVATING IN THE STREET RIGHT-OF-WAY.

NO.	DATE	REVISION	APP.

NOTICE:
FOR YOUR SAFETY, YOU ARE REQUIRED BY TEXAS LAW TO CALL 811 AT LEAST 48 HOURS BEFORE YOU DIG SO THAT UNDERGROUND LINES CAN BE MARKED. THIS SIGNATURE DOES NOT FULFILL YOUR OBLIGATION TO CALL 811

VERIFICATION OF PRIVATE UTILITY LINES

Date

CenterPoint Energy natural gas utilities shown. (Gas service lines are not shown). This signature not be used for conflict verification.

Signature valid for six months.

Date

CenterPoint Energy/UNDERGROUND Electrical Facilities Verification ONLY. (This signature verifies existing underground facilities – not to be used for conflict verification)

Signature valid for six months.

Date

Approved for AT&T underground conduit facilities only.
Signature valid for one year.

LEGEND

- EXISTING CONCRETE PAVEMENT
- PROP. W/6" CEMENT STABILIZED SAND SUBGRADE
- EXISTING CONCRETE SIDEWALK
- PROP. 4.5" THICK CONCRETE SIDEWALK
- PROP. 5" THICK CONCRETE PAVEMENT
- # DETAIL NO. / SHEET NO.

IDS Engineering Group
13430 NW. Freeway, Suite 700
Houston, Tx. 77040
713.462.3178
TxEng Firm 2726 | TxSurv Firm 10110700

SURVEYED BY: KUO & ASSOCIATES, INC.
TBPE FIRM #F-4578; TBPLS FIRM #1007560

THIS DOCUMENT IS RELEASED FOR THE PURPOSE OF REVIEW UNDER THE AUTHORITY OF MARCEL KHOUW, P.E. 101807 ON 12/17/2025. IT IS NOT TO BE USED FOR CONSTRUCTION PURPOSES.

CITY OF HOUSTON
HOUSTON PUBLIC WORKS

LIFT STATION RENEWAL AND REPLACEMENT FY 2023

WOODFOREST LIFT STATION PROPOSED SITE PLAN

WBS NUMBER	FOR CITY OF HOUSTON USE ONLY
R-000267-0179-4	
DRAWING SCALE	
HORIZ: 1" = 10' VERT: N/A	
CITY OF HOUSTON PM	
NAWARAJ PANTA, P.E.	
DWG. NO. WDF-C-03	SHEET NO. 229 OF 321

PLOTTED: 12/17/2025 8:31 AM

NOTES:

1. CONTRACTOR SHALL SUBMIT EXPANSION AND CONTROL JOINT PLAN FOR APPROVAL.
2. EXPANSION JOINTS SHALL BE INSTALLED AT ALL CURB RETURNS AND AT A MAXIMUM SPACING OF 60–FT INTERVALS. PLACE ½ INCH PREFORMED EXPANSION JOINTS THROUGH CURB AND GUTTERS AT LOCATIONS OF EXPANSION JOINTS IN PAVEMENT, AT END OF RADIUS RETURNS, AT STREET INTERSECTIONS AND DRIVEWAYS, AND AT CURB INLETS.
3. LONGITUDINAL CONSTRUCTION JOINTS SHALL BE SPACED AT A MAXIMUM OF 15 FEET. DEFORMED METAL STRIP TO BE INSTALLED MAXIMUM ¼ INCH BELOW FINISHED TOP OF PAVEMENTS.
4. RESPONSIBILITY FOR MAINTENANCE OF THE DETENTION FACILITY WILL BE BY THE PROPERTY OWNER.
5. SUBSURFACE DRAINAGE SYSTEMS ARE REQUIRED TO BE DRAINED IN 48 HOURS.
6. OFFSITE FLOW IS UNAFFECTED BY THE PROPOSED LIFT STATION STRUCTURE AND CONCRETE PAVING.
7. DRAINAGE AREA EXTENDS BEYOND THE LIMITS OF THIS SHEET.

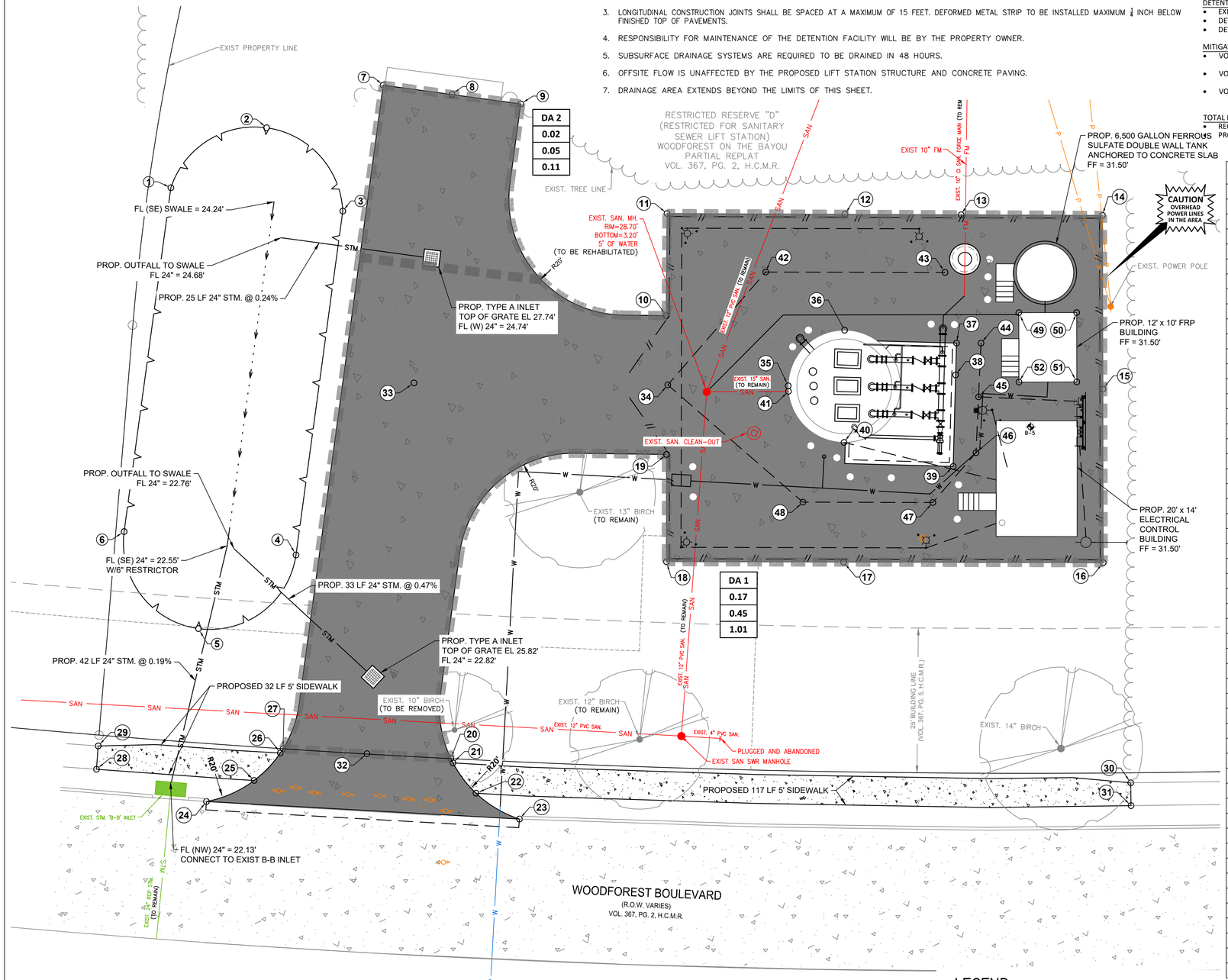

STORMWATER DETENTION CALCULATIONS

• GROSS AREA	0.XXXx AC
• PROP. IMPERVIOUS AREA	0.1862 AC
• STORAGE RATE	0.7500 AC-FT/AC
• STORAGE REQUIRED	0.1397 AC-FT

DETENTION CREDIT

• EXIST. IMPERVIOUS AREA REMOVED	0.1565 AC
• DETENTION CREDIT RATE	0.4000 AC-FT/AC
• DETENTION CREDIT VOLUME	0.0626 AC-FT

MITIGATION CALCULATIONS

- VOLUME OF FILL = (168 SF)(2.72 FT) + (120 SF)(2.72 FT) + (71 SF)(2.72 FT)
  V_F=0.0224 AC-FT
- VOLUME OF CUT = 138 FT^3 (DEMO OF EXIST MCC BUILDING)
  V_C=0.0032 AC-FT
- VOLUME REQUIRED
  V_F–V_C = 0.0224 - 0.0032 = 0.0192 AC-FT

TOTAL DETENTION

- REQUIRED = 0.1397 AC-FT - 0.0626 AC-FT + 0.0192 AC-FT = 0.0963 AC-FT
- PROVIDED = 0.1156 AC-FT

10' 0' 10'
SCALE
1" = 10'

BENCHMARK:

FLOODPLAIN REFERENCE MARK NUMBER 150200 IS AN ALUMINUM ROD STAMPED 150200 LOCATED ON THE NORTH SIDE OF WOODFOREST DR APPROXIMATELY 500 FEET FROM THE INTERSECTION OF MAXEY ROAD IN KEY MAP NO. 496C IN THE GREENS BAYOU WATERSHED.

ELEV. 32.40 FEET NAVD 1988, 2001 ADJUSTMENT

FLOODPLAIN NOTE:

FLOODPLAIN REFERENCE MARK NUMBER 150200 IS AN ALUMINUM ROD STAMPED 150200 LOCATED ON THE NORTH SIDE OF WOODFOREST DR APPROXIMATELY 500 FEET EAST FROM THE INTERSECTION OF MAXEY RD IN KEY MAP NO. 496C IN THE GREENS BAYOU WATERSHED

ELEV. 32.40 FEET NAVD 1988, 2001 ADJUSTMENT
100–YR ELEV. 25.00'
500–YR ELEV. 28.50'
FIRM PANEL: 48201C0715M

T.B.M #46:

SET "X" CUT IN CONCRETE ON MEDIAN NOSE ON WOODFOREST BLVD ABOUT 0.3 MILE WEST FORM THE INTERSECTION OF NORMANDY ST
ELEV.= 29.98 FT.

EXISTING UTILITY NOTE:

EXISTING UNDERGROUND UTILITY INFORMATION (TYPE, SIZE & OWNERSHIP) ARE SHOWN APPROXIMATELY BASED ON THE AVAILABLE RECORD DRAWINGS AND FIELD VERIFICATION (WHERE FEASIBLE) WITHOUT PROBING AND EXCAVATION. NO WARRANTY IS MADE AS TO THE ACCURACY OR COMPLETENESS OF UTILITY LOCATION SHOWN ON THE DRAWING. CAUTION SHOULD BE EXERCISED WHEN EXCAVATING OR BORE AND JACKING IN THE VICINITY OF UNDERGROUND UTILITIES. OWNERS OF THE UTILITIES SHOULD BE NOTIFIED PRIOR TO SUCH ACTIVITIES. CALL UTILITY COORDINATING COMMITTEE AT 713–223–4567, AT LEAST 48 HOURS PRIOR TO EXCAVATING IN THE STREET RIGHT–OF–WAY.

PROPOSED POINT TABLE

POINT	NORTHING	EASTING	DESCRIPTION	ELEVATION
1	13856430.80	3171459.55	PROP. TOP BANK/MEG	28.74'
2	13856446.44	3171471.23	PROP. TOP BANK/MEG	27.70'
3	13856437.77	3171488.73	PROP. TOP BANK	27.72'
4	13856379.39	3171502.67	PROP. TOP BANK	26.15'
5	13856361.43	3171491.54	PROP. TOP BANK/MEG	27.25'
6	13856372.43	3171473.49	PROP. TOP BANK/MEG	27.95'
7	13856460.60	3171487.38	PROP. TOP OF PAVEMENT	28.70'
8	13856463.39	3171499.06	PROP. TOP OF PAVEMENT	28.58'
9	13856466.17	3171510.73	PROP. TOP OF PAVEMENT	28.81'
10	13856441.12	3171547.42	PROP. TOP OF PAVEMENT	28.38'
11	13856457.64	3171541.16	PROP. TOP OF PAVEMENT/MEG	28.84'
12	13856468.64	3171569.92	PROP. TOP OF PAVEMENT/MEG	28.88'
13	13856475.80	3171588.65	PROP. TOP OF PAVEMENT/MEG	28.84'
14	13856484.54	3171611.49	PROP. TOP OF PAVEMENT/MEG	28.81'
15	13856456.55	3171622.41	PROP. TOP OF PAVEMENT/MEG	28.78'
16	13856428.59	3171633.31	PROP. TOP OF PAVEMENT/MEG	28.55'
17	13856412.47	3171591.40	PROP. TOP OF PAVEMENT/MEG	28.54'
18	13856401.47	3171562.81	PROP. TOP OF PAVEMENT/MEG	28.53'
19	13856418.76	3171556.13	PROP. TOP OF PAVEMENT	28.19'
20	13856356.24	3171540.35	PROP. TOP OF PAVEMENT	26.36'
21	13856355.68	3171540.97	PROP. TOP OF PAVEMENT	26.36'
22	13856352.23	3171546.57	PROP. TOP OF PAVEMENT	26.36'
23	13856350.78	3171555.19	PROP. TOP OF PAVEMENT/MEG	26.36'
24	13856334.05	3171503.62	PROP. TOP OF PAVEMENT/MEG	25.52'
25	13856340.42	3171510.00	PROP. TOP OF PAVEMENT	25.72'
26	13856346.49	3171512.51	PROP. TOP OF PAVEMENT	25.89'
27	13856347.34	3171512.68	PROP. TOP OF PAVEMENT	25.92'
28	13856332.38	3171483.88	PROP. TOP OF PAVEMENT/MEG	25.85'
29	13856336.24	3171482.70	PROP. TOP OF PAVEMENT	25.95'
30	13856394.81	3171651.50	PROP. TOP OF PAVEMENT/MEG	28.76'
31	13856391.15	3171652.98	PROP. TOP OF PAVEMENT/MEG	28.49'
32	13856351.79	3171526.52	PROP. TOP OF PAVEMENT	26.07'
33	13856414.51	3171510.94	PROP. TOP OF PAVEMENT	27.09'
34	13856430.05	3171551.99	PROP. TOP OF PAVEMENT	28.07'
35	13856437.42	3171571.46	PROP. TOP OF PAVEMENT	28.84'
36	13856449.91	3171577.08	PROP. TOP OF PAVEMENT	28.84'
37	13856455.07	3171596.59	PROP. TOP OF PAVEMENT	28.82'
38	13856449.88	3171598.44	PROP. TOP OF SLAB	29.82'
39	13856440.00	3171601.96	PROP. TOP OF PAVEMENT	28.75'
40	13856431.78	3171584.01	PROP. TOP OF PAVEMENT	28.70'
41	13856436.55	3171571.84	PROP. TOP OF SLAB	29.84'
42	13856454.36	3171560.73	PROP. TOP OF PAVEMENT	28.39'
43	13856465.50	3171589.68	PROP. TOP OF PAVEMENT	28.78'
44	13856456.34	3171599.90	PROP. TOP OF PAVEMENT	28.70'
45	13856447.54	3171602.86	PROP. TOP OF PAVEMENT	28.63'
46	13856438.38	3171605.93	PROP. TOP OF PAVEMENT	28.56'
47	13856427.65	3171602.07	PROP. TOP OF PAVEMENT	28.47'
48	13856419.58	3171581.10	PROP. TOP OF PAVEMENT	28.30'
49	13856463.63	3171604.08	PROP. TOP OF PAVEMENT	28.80'
50	13856467.26	3171613.40	PROP. TOP OF PAVEMENT	28.80'
51	13856456.08	3171617.76	PROP. TOP OF PAVEMENT	28.75'
52	13856452.45	3171608.44	PROP. TOP OF PAVEMENT	28.70'

LEGEND

- EXISTING CONCRETE PAVEMENT
- PROP. 7" THICK CONCRETE PAVEMENT
- EXISTING CONCRETE SIDEWALK
- PROP. 4.5" THICK CONCRETE SIDEWALK
- PROP. 5" THICK CONCRETE PAVEMENT
- ON–SITE SHEET FLOW DIRECTION
- OFFSITE SHEET FLOW DIRECTION (SEE NOTE XX)
- 76 EXISTING CONTOUR
- DRAINAGE AREA BOUNDARY
- XX DRAINAGE AREA NO.
- X.XX ACRES
- X.XX 2–YR FLOW (CFS)
- X.XX 100–YR FLOW (CFS)
- # / # DETAIL NO. / SHEET NO.
- SAW–CUT CONCRETE

NO.	DATE	REVISION	APP.

NOTICE:
FOR YOUR SAFETY, YOU ARE REQUIRED BY TEXAS LAW TO CALL 811 AT LEAST 48 HOURS BEFORE YOU DIG SO THAT UNDERGROUND LINES CAN BE MARKED. THIS SIGNATURE DOES NOT FULFILL YOUR OBLIGATION TO CALL 811

VERIFICATION OF PRIVATE UTILITY LINES

Date

CenterPoint Energy natural gas utilities shown. (Gas service lines are not shown). This signature not be used for conflict verification.

Signature valid for six months.

Date

CenterPoint Energy/UNDERGROUND Electrical Facilities Verification ONLY. (This signature verifies existing underground facilities – not to be used for conflict verification)

Signature valid for six months.

Date

Approved for AT&T underground conduit facilities only.
Signature valid for one year.

IDS Engineering Group
13430 NW. Freeway, Suite 700
Houston, Tx. 77040
713.462.3178
TxEng Firm 2726 | TxSurv Firm 10110700

SURVEYED BY: KUO & ASSOCIATES, INC.
TBPE FIRM #F–4578; TBPLS FIRM #1007560

THIS DOCUMENT IS RELEASED FOR THE PURPOSE OF REVIEW UNDER THE AUTHORITY OF MARCEL KHOUW, P.E. 101807 ON 12/17/2025. IT IS NOT TO BE USED FOR CONSTRUCTION PURPOSES.

CITY OF HOUSTON
HOUSTON PUBLIC WORKS

LIFT STATION RENEWAL AND REPLACEMENT FY 2023

WOODFOREST LIFT STATION GRADING PLAN AND DRAINAGE PLAN

WBS NUMBER	FOR CITY OF HOUSTON USE ONLY
R–000267–0179–4	
DRAWING SCALE	
HORIZ: 1" = 10' VERT: N/A	
CITY OF HOUSTON PM	
NAWARAJ PANTA, P.E.	
DWG. NO. WDF–C–07	SHEET NO. 230 OF 321

FILE PATH: \\tdseg.com\FS\Projects\0000\005708500 CoH Lift Stations – FY 2023\CAD\DWG\PRODUCTION\230–WOODFOREST GRADING.dwg

PLOTTED: 12/17/2025 8:31 AM

STORM SEWER CALCULATIONS

IDS ENGINEERING GROUP

CLIENT NAME: **CITY OF HOUSTON**
PROJECT NAME: **WBS NO. R-000267-0179-3 - LOCKWOOD LIFT STATION**
IDS JOB NO: **0057-085-00**
DATE PRINTED: November 10, 2025
DATE REVISED: October 8, 2025 BY: CM

SELECT STORM EVENT FREQUENCY: 2 year
SELECT APPROPRIATE LAND USE: Light Industrial
ENTER DESIGN CURB HEIGHT (inches): 0

Re-Generate Formulas

Line	Manhole or Inlet Number U / S	D / S	Reach Length (feet)	Diameter or Rise (inches)	Span (inches)	No. of Barrels	Pipe Material	Pipe Grade Minimum (%)	Pipe Grade Actual (%)	Area (acres)	Sum of Area (acres)	Runoff Coeff.	Sum of C x Area (acres)	Travel Time (minutes)	Time of Concentration (minutes)	Intensity (in./hr.)	Sum of Flows (cfs)	Design Flow (cfs)	Design Velocity (fps)	Actual Velocity (fps)	Hydraulic Gradient (%)	Change in Head (feet)	Upstream Top of Grate (feet)	Hydraulic Grade Upstream (feet)	Hydraulic Grade Downstream (feet)	Manhole Drop (D/S) (feet)	Pipe Flowline Upstream (feet)	Pipe Flowline Downstream (feet)	Depth from Gutter to HGL (feet)	Depth of Cover (feet)	Upstream NG Elev. (feet)	Depth from NG to HGL (feet)
1	A INLET	SWALE	24.84	24		1	RCP	0.180%	0.242%	0.02	0.02	0.65	0.01	27.87	19.9	4.22	0.05	11.12	3.54	0.01	0.000%	0.00	27.74	26.68	26.68		***24.74***	24.68	1.06	1.00		-26.68
2	A INLET	SWALE	33.00	24		1	RCP	0.180%	0.182%	0.17	0.17	0.65	0.11	3.88	22.3	3.98	0.45	9.65	3.07	0.14	0.000%	0.00	25.82	24.76	24.76		***22.82***	***22.76***	1.06	1.00		-24.76
3	SWALE	***B-B INLET***	42.00	24		1	RCP	0.180%	1.000%	0.19	0.19	0.65	0.12	4.51	22.5	3.97	0.49	22.62	7.20	0.16	0.000%	0.00	27.74	24.13	24.13		***22.55***	***22.13***	3.61	3.19		-24.13

NOTES:
1. This spreadsheet has been developed using the City of Houston criteria outlined in the November 2023 Infrastructure Design Manual. The Rational Method has been used to calculate flows, and Manning's Formula for pipes flowing full has been used to calculate velocities.
2. This spreadsheet calculates rainfall intensity using the b, d, and e constants for Harris County and the City of Houston, as outlined in Appendix H of the Harris County Infrastructure Regulations, and Chapter 9 of the November 2023 City of Houston Infrastructure Design Manual
3. Minimum storm sewer grades and maximum velocities as established in the City of Houston design criteria have been used to establish the grades used in this system.
4. Land Use "SFR" represents Single-Family Residential development. Land Use "MFR" represents Multi-Family Residential development.
5. Design flow and velocity are based entirely on pipe grade and represent the condition when pipe is flowing full with the hydraulic grade line equal to the pipe grade, and are used to demonstrate that the pipe slopes used in the calculations conform to the City of Houston minimum and maximum standards.

Runoff Coefficient Table	
Land Use	C
SFR (> ½ ac. lots)	0.35
SFR (¼ - ½ ac. lots)	0.45
SFR (< ¼ ac. lots)	0.55
MFR (< 20 d.u./ac.)	0.65
MFR (>= 20 d.u./ac.)	0.80
Business Districts	0.80
Light Industrial	0.65
Heavy Industrial	0.75
Railroad Yard Areas	0.30
Parks/Open Areas	0.18
Land Use Varies	ENTER

Pipe Material	Mannings "n" Value	Pipe Description
CLAY	0.012	Extra Strength Vitrified Clay Pipe
CMP	0.024	Corrugated Metal Pipe
CMPSI	0.013	CMP w/ Smooth Interior
HDPE	0.013	High Density Polyethylene Pipe
PVC	0.013	Polyvinyl Chloride Pipe
RCA	0.013	Reinforced Concrete Arch Pipe
RCB	0.015	Reinforced Concrete Box Culvert
RCE	0.013	Reinforced Concrete Elliptical Pipe
RCP	0.013	Reinforced Concrete Pipe

Rainfall Freq. (yrs)	b	d	e
2 year	***48.35***	***9.07***	***0.7244***
5 year	52.32	7.88	0.6900
10 year	54.68	6.96	0.6623
25 year	57.79	5.89	0.6294
50 year	61.00	5.46	0.6096
100 year	60.66	4.44	0.5797
500 year	62.17	2.95	0.5196

Master Spreadsheet - Storm Sewer Calculations Updated 02/10/2025
\\idseg.com\FS\Projects\0000\005708500 CoH Lift Stations - FY 2023\Eng\Calcs\Drainage\[6. Woodforest Drainage Calcs.xlsx]CALCULATIONS

STORM SEWER CALCULATIONS

IDS ENGINEERING GROUP

CLIENT NAME: **CITY OF HOUSTON**
PROJECT NAME: **WBS NO. R-000267-0179-3 - LOCKWOOD LIFT STATION**
IDS JOB NO: **0057-085-00**
DATE PRINTED: November 10, 2025
DATE REVISED: October 8, 2025 BY: CM

SELECT STORM EVENT FREQUENCY: 100 year
SELECT APPROPRIATE LAND USE: Light Industrial
ENTER DESIGN CURB HEIGHT (inches): 0

Re-Generate Formulas

Line	Manhole or Inlet Number U / S	D / S	Reach Length (feet)	Diameter or Rise (inches)	Span (inches)	No. of Barrels	Pipe Material	Pipe Grade Minimum (%)	Pipe Grade Actual (%)	Area (acres)	Sum of Area (acres)	Runoff Coeff.	Sum of C x Area (acres)	Travel Time (minutes)	Time of Concentration (minutes)	Intensity (in./hr.)	Sum of Flows (cfs)	Design Flow (cfs)	Design Velocity (fps)	Actual Velocity (fps)	Hydraulic Gradient (%)	Change in Head (feet)	Upstream Top of Grate (feet)	Hydraulic Grade Upstream (feet)	Hydraulic Grade Downstream (feet)	Manhole Drop (D/S) (feet)	Pipe Flowline Upstream (feet)	Pipe Flowline Downstream (feet)	Depth from Gutter to HGL (feet)	Depth of Cover (feet)	Upstream NG Elev. (feet)	Depth from NG to HGL (feet)
1	A INLET	SWALE	24.84	24		1	RCP	0.180%	0.242%	0.02	0.02	0.65	0.01	12.34	19.9	9.54	0.11	11.12	3.54	0.03	0.000%	0.00	27.74	26.68	26.68		***24.74***	24.68	1.06	1.00		-26.68
2	A INLET	SWALE	33.00	24		1	RCP	0.180%	0.182%	0.17	0.17	0.65	0.11	1.71	22.3	9.02	1.01	9.65	3.07	0.32	0.002%	0.00	25.82	24.76	24.76		***22.82***	***22.76***	1.06	1.00		-24.76
3	SWALE	***B-B INLET***	42.00	24		1	RCP	0.180%	1.000%	0.19	0.19	0.65	0.12	1.99	22.5	9.00	1.11	22.62	7.20	0.35	0.002%	0.00	27.74	24.13	24.13		***22.55***	***22.13***	3.61	3.19		-24.13

NOTES:
1. This spreadsheet has been developed using the City of Houston criteria outlined in the November 2023 Infrastructure Design Manual. The Rational Method has been used to calculate flows, and Manning's Formula for pipes flowing full has been used to calculate velocities.
2. This spreadsheet calculates rainfall intensity using the b, d, and e constants for Harris County and the City of Houston, as outlined in Appendix H of the Harris County Infrastructure Regulations, and Chapter 9 of the November 2023 City of Houston Infrastructure Design Manual
3. Minimum storm sewer grades and maximum velocities as established in the City of Houston design criteria have been used to establish the grades used in this system.
4. Land Use "SFR" represents Single-Family Residential development. Land Use "MFR" represents Multi-Family Residential development.
5. Design flow and velocity are based entirely on pipe grade and represent the condition when pipe is flowing full with the hydraulic grade line equal to the pipe grade, and are used to demonstrate that the pipe slopes used in the calculations conform to the City of Houston minimum and maximum standards.

Runoff Coefficient Table	
Land Use	C
SFR (> ½ ac. lots)	0.35
SFR (¼ - ½ ac. lots)	0.45
SFR (< ¼ ac. lots)	0.55
MFR (< 20 d.u./ac.)	0.65
MFR (>= 20 d.u./ac.)	0.80
Business Districts	0.80
Light Industrial	0.65
Heavy Industrial	0.75
Railroad Yard Areas	0.30
Parks/Open Areas	0.18
Land Use Varies	ENTER

Pipe Material	Mannings "n" Value	Pipe Description
CLAY	0.012	Extra Strength Vitrified Clay Pipe
CMP	0.024	Corrugated Metal Pipe
CMPSI	0.013	CMP w/ Smooth Interior
HDPE	0.013	High Density Polyethylene Pipe
PVC	0.013	Polyvinyl Chloride Pipe
RCA	0.013	Reinforced Concrete Arch Pipe
RCB	0.015	Reinforced Concrete Box Culvert
RCE	0.013	Reinforced Concrete Elliptical Pipe
RCP	0.013	Reinforced Concrete Pipe

Rainfall Freq. (yrs)	b	d	e
2 year	48.35	9.07	0.7244
5 year	52.32	7.88	0.6900
10 year	54.68	6.96	0.6623
25 year	57.79	5.89	0.6294
50 year	61.00	5.46	0.6096
100 year	***60.66***	***4.44***	***0.5797***
500 year	62.17	2.95	0.5196

Master Spreadsheet - Storm Sewer Calculations Updated 02/10/2025
\\idseg.com\FS\Projects\0000\005708500 CoH Lift Stations - FY 2023\Eng\Calcs\Drainage\[6. Woodforest Drainage Calcs.xlsx]CALCULATIONS

NO.	DATE	REVISION	APP.

IDS Engineering Group
13430 NW. Freeway, Suite 700
Houston, Tx. 77040
713.462.3178
TxEng Firm 2726 | TxSurv Firm 10110700

SURVEYED BY: KUO & ASSOCIATES, INC.
TBPE FIRM #F-4578; TBPLS FIRM #1007560

THIS DOCUMENT IS RELEASED FOR THE PURPOSE OF REVIEW UNDER THE AUTHORITY OF MARCEL KHOUW, P.E. 101807 ON 12/17/2025. IT IS NOT TO BE USED FOR CONSTRUCTION PURPOSES.

CITY OF HOUSTON
HOUSTON PUBLIC WORKS

LIFT STATION RENEWAL AND REPLACEMENT FY 2023

WOODFOREST LIFT STATION DRAINAGE CALCULATIONS

WBS NUMBER	FOR CITY OF HOUSTON USE ONLY
R-000267-0179-4	
DRAWING SCALE	
HORIZ: N/A VERT: N/A	
CITY OF HOUSTON PM	
NAWARAJ PANTA, P.E.	
DWG. NO. WDF-C-08	SHEET NO. 231 OF 321

FILE PATH: \\idseg.com\FS\Projects\0000\005708500 CoH Lift Stations - FY 2023\CAD\DWG\PRODUCTION\231-WOODFOREST CALCULATIONS.dwg

PLOTTED: 12/17/2025 8:32 AM

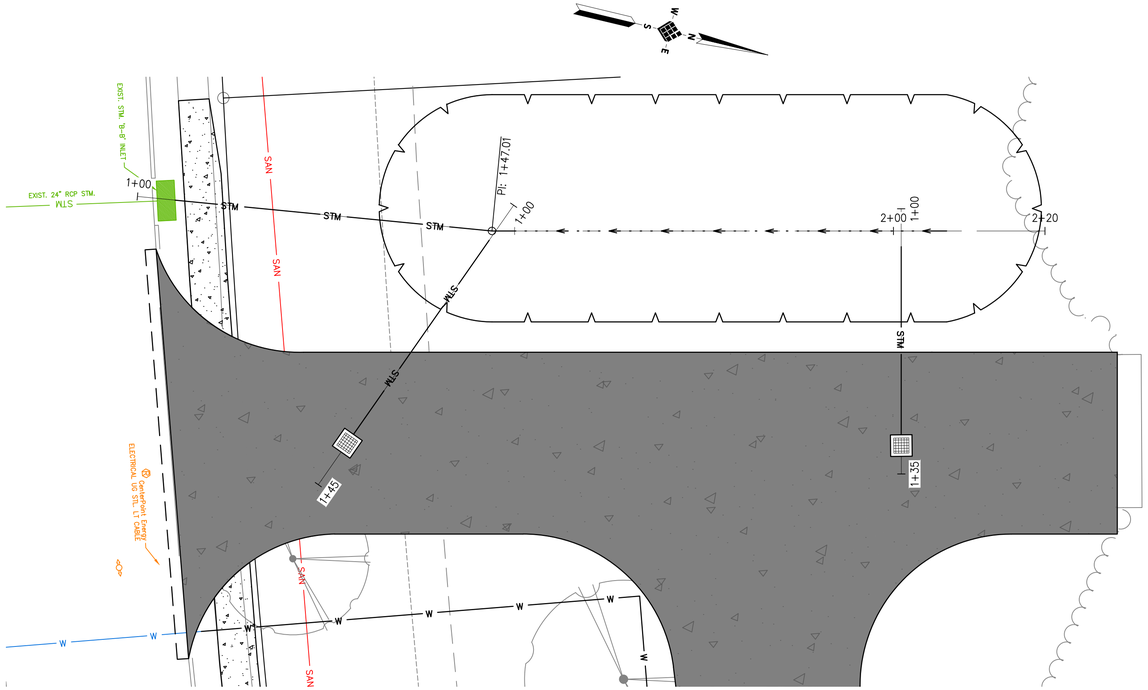

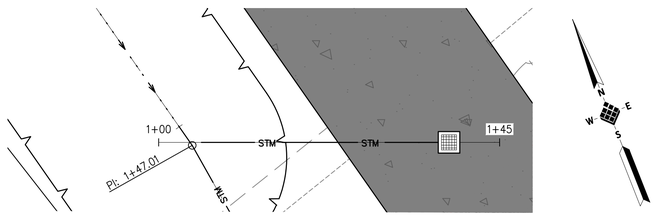

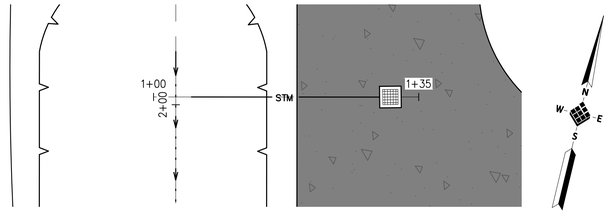

10' 0' 10'
SCALE
H: 1" = 10'
V: 1" = 2'

NO.	DATE	REVISION	APP.

FOR PERMITTING REVIEW ONLY - TO BE SUBMITTED AT 90%

IDS Engineering Group
13430 NW. Freeway, Suite 700
Houston, Tx. 77040
713.462.3178
TxEng Firm 2726 | TxSurv Firm 10110700

SURVEYED BY: KUO & ASSOCIATES, INC.
TBPE FIRM #F-4578; TBPLS FIRM #1007560

THIS DOCUMENT IS RELEASED FOR THE PURPOSE OF REVIEW UNDER THE AUTHORITY OF MARCEL KHOUW, P.E. 101807 ON 12/17/2025. IT IS NOT TO BE USED FOR CONSTRUCTION PURPOSES.

CITY OF HOUSTON
HOUSTON PUBLIC WORKS

LIFT STATION RENEWAL AND REPLACEMENT FY 2023

WOODFOREST LIFT STATION PLAN AND PROFILE

WBS NUMBER	FOR CITY OF HOUSTON USE ONLY
R-000267-0179-4	
DRAWING SCALE	
HORIZ: 1" = 10' VERT: 1" = 2'	
CITY OF HOUSTON PM	
NAWARAJ PANTA, P.E.	
SHEET NO. 232 OF 321	

DWG. NO.
WDF-C-09

FILE PATH: \\idseg.com\FS\Projects\0000\005708500 CoH Lift Stations - FY 2023\CAD\DWG\PRODUCTION\232-WOODFOREST PLAN AND PROFILE.dwg

PLOTTED: 12/17/2025 8:32 AM

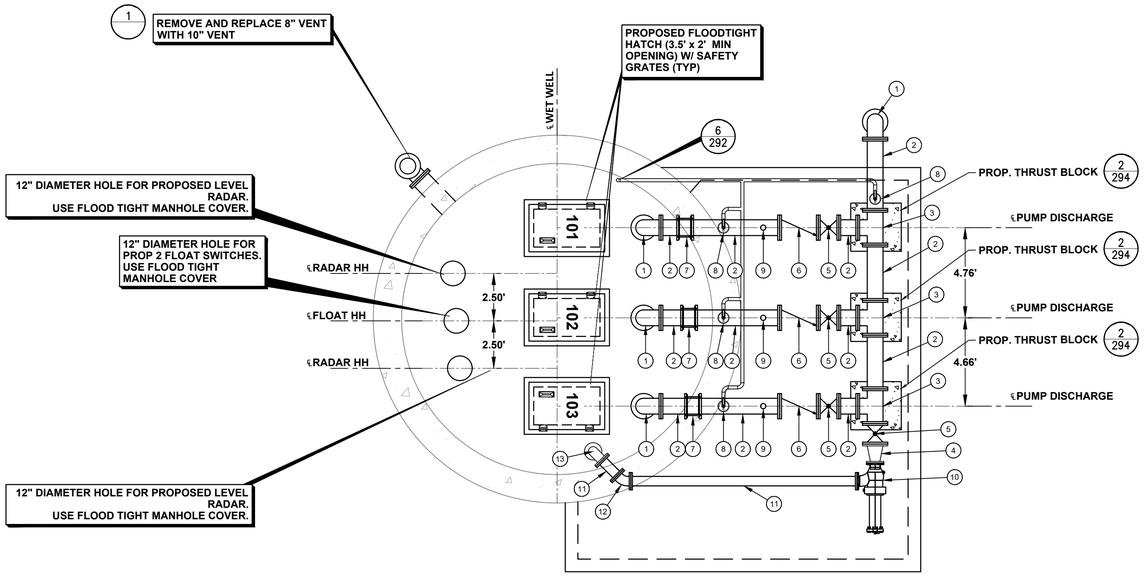

PLAN VIEW AT GRADE

SCALE: 1"=4'

ITEMS TO BE REMOVED & REPLACED		
KEYED NOTES	ITEM	QTY
1	90° BEND (10")	4
2	SPOOL PIECE (10")	12
3	TEE (10" x 10")	2
4	REDUCER (10" x 6")	1
5	PLUG VALVE (10")	3
6	CHECK VALVE (10")	3
7	FLEXIBLE COUPLING (10")	3
8	2" AIR RELEASE & VACUUM VALVE ASSEMBLY	4
9	PRESSURE GAUGE ASSEMBLY	3
10	APCO SRA-3000A SURGE RELIEF VALVE (6") SET TO OPEN AT 65 PSI	1
11	SPOOL PIECE (6")	2
12	45° BEND (6")	1
13	90° BEND (6")	1

NOTES:

1. ABRASIVE BLAST AND COAT ALL PIPING AND FITTINGS NOT BEING REPLACED IN WET WELL.
2. CONTRACTOR TO VERIFY DIMENSIONS REQUIRED TO INSTALL AND OPERATE VALVES.
3. EXISTING LIFT STATION WET WELL STRUCTURE TO REMAIN.
4. UV PROTECTIVE COATINGS ARE REQUIRED BY THE CITY OF HOUSTON ON ALL VENT PIPES.
5. LABEL HATCHES WITH THE CORRESPONDING PUMP NUMBER USING A 12–INCH BY 6–INCH ALUMINUM PLATE ENGRAVED WITH 1.5–INCH LETTERING WELDED TO THE HATCH.
6. CONTRACTOR TO CONFIRM SIZE AND LOCATION OF THE WET WELL HATCHES PER HATCH AND PUMP MANUFACTURER REQUIREMENTS.
7. PUMP AND ANCHOR BOLTS ARE TO BE ADHESIVE TYPE, AND EMBEDDED IN THE CONCRETE SLAB. CONTRACTOR TO SUBMIT DESIGN OF PUMP ANCHOR BOLTS AND PATTERN, INCLUDING CALCULATIONS, CURING SHOP DRAWING SUBMISSION.
8. ALL PIPING IN THE WET WELL SHALL BE FLANGED. NO FLANGED COUPLING ADAPTORS, OR VICTAULIC STYLE COUPLINGS SHALL BE PERMITTED INSIDE OF THE WET WELL.
9. ACCESS HATCHES SHALL BE FOREST GREEN. SAFETY GRATING SHALL BE FURNISHED WITH SAFETY ORANGE POWDER COAT FINISH.

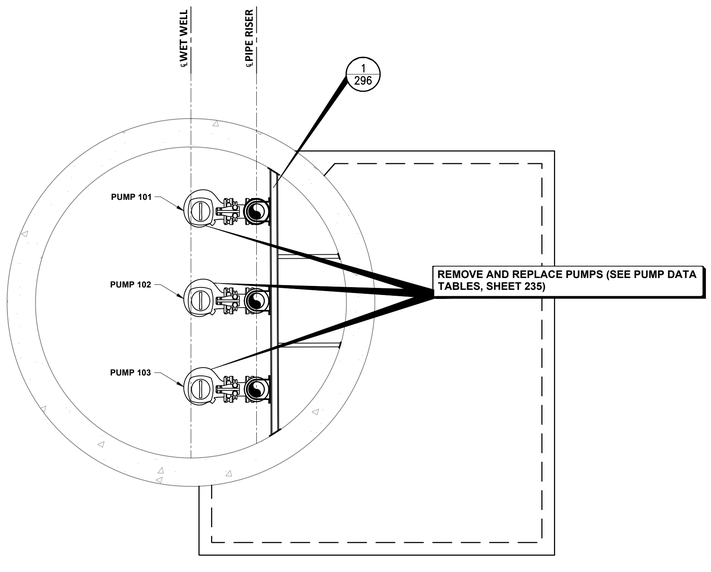

SECTION A-A VIEW A

1" = 4'

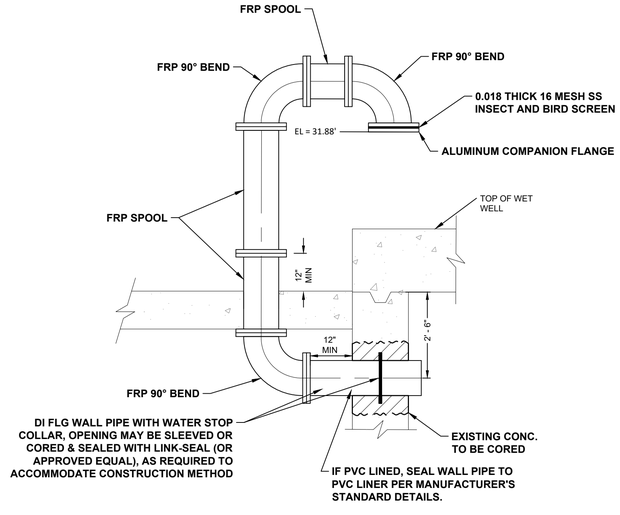

EXISTING STRUCTURE PENETRATION 1

N.T.S.

LEGEND

X / X — DETAIL NO. / SHEET NO.

EXISTING CONCRETE

PROPOSED CONCRETE

NO.	DATE	REVISION	APP.

IDS Engineering Group
13430 NW. Freeway, Suite 700
Houston, Tx. 77040
713.462.3178
TxEng Firm 2726 | TxSurv Firm 10110700

SURVEYED BY: KUO & ASSOCIATES, INC.
TBPE FIRM #F-4578; TBPLS FIRM #1007560

THIS DOCUMENT IS RELEASED FOR THE PURPOSE OF REVIEW UNDER THE AUTHORITY OF MARCEL KHOUW, P.E. 101807 ON 12/17/2025. IT IS NOT TO BE USED FOR CONSTRUCTION PURPOSES.

CITY OF HOUSTON
HOUSTON PUBLIC WORKS

LIFT STATION RENEWAL AND REPLACEMENT FY 2023

WOODFOREST LIFT STATION PLAN AT GRADE AND BASE

WBS NUMBER	FOR CITY OF HOUSTON USE ONLY
R–000267–0179–4	
DRAWING SCALE	
HORIZ: VALUE VERT: VALUE	
CITY OF HOUSTON PM	
NAWARAJ PANTA, P.E.	
SHEET NO. 233 OF 321	

DWG. NO. WDF–C–10

FILE PATH: \\idseg.com\FS\Projects\0000\005708500 CoH Lift Stations – FY 2023\CAD\DWG\PRODUCTION\233–WOODFOREST PLAN AT GRADE.dwg

PLOTTED: 12/17/2025 8:32 AM

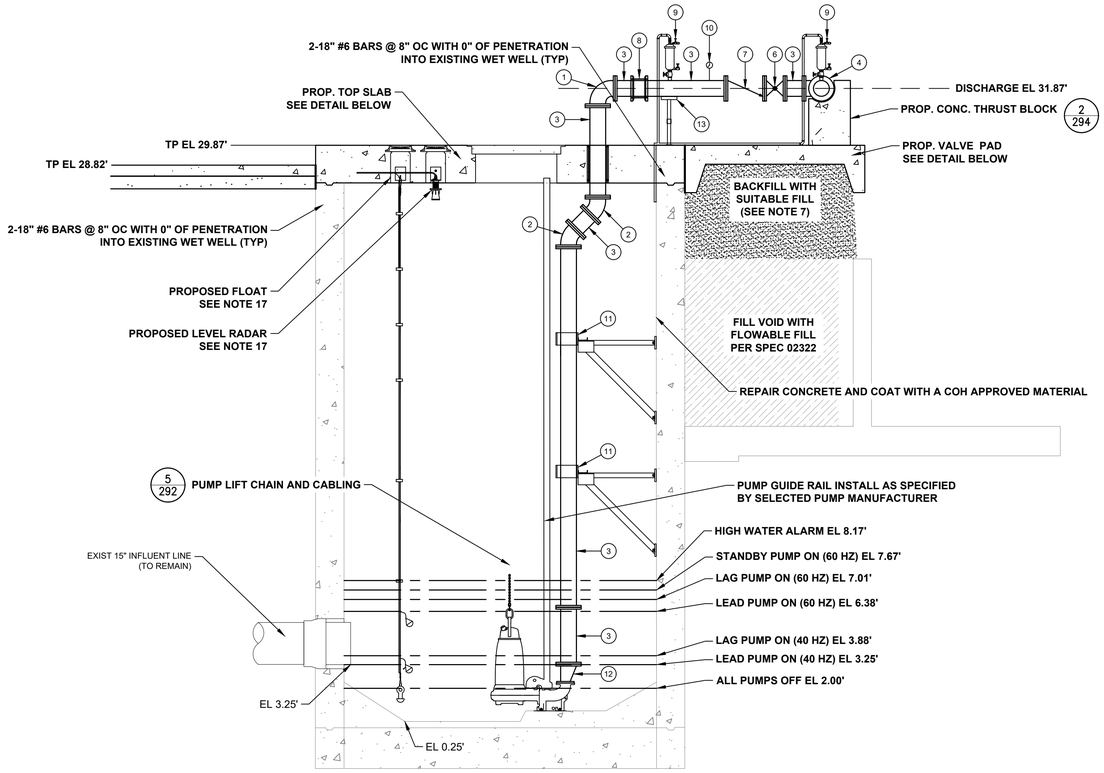

SECTIONAL ELEVATION A

SCALE: 1" = 4'

ITEMS TO BE REMOVED & REPLACED		
KEYED NOTES	ITEM	QTY
1	90° BEND (10")	1
2	45° BEND (10")	2
3	SPOOL PIECE (10")	7
4	TEE (10" x 10")	1
5	TEE (10" x 10") W/ BLIND FLANGE (10")	0
6	PLUG VALVE (10")	1
7	CHECK VALVE (10")	1
8	FLEXIBLE COUPLING (10")	1
9	2" AIR RELEASE & VACUUM VALVE ASSEMBLY	2
10	PRESSURE GAUGE ASSEMBLY	1
11	316 STAINLESS STEEL SUPPORTS	2
12	ECCENTRIC REDUCER (10" x 6")	1
13	ADJUSTABLE PIPE SUPPORT	3

NOTES:

1. ABRASIVE BLAST AND COAT ALL PIPING AND FITTINGS NOT BEING REPLACED IN WET WELL.
2. CONTRACTOR TO VERIFY DIMENSIONS REQUIRED TO INSTALL AND OPERATE VALVES.
3. EXISTING LIFT STATION WET WELL STRUCTURE TO REMAIN.
4. UV PROTECTIVE COATINGS ARE REQUIRED BY THE CITY OF HOUSTON ON ALL VENT PIPES.
5. LABEL HATCHES WITH THE CORRESPONDING PUMP NUMBER USING A 12–INCH BY 6–INCH ALUMINUM PLATE ENGRAVED WITH 1.5–INCH LETTERING WELDED TO THE HATCH.
6. FILL VOID LEFT BY REMOVAL OF EXISTING VALVE VAULT WITH SUITABLE FILL.
7. SEE ELECTRICAL PLANS FOR ADDITIONAL IMPROVEMENTS.
8. ABRASIVE BLAST AND COAT TO BE IN ACCORDANCE WITH SYSTEM 108 PER SPEC SECTION 09901 PART 2.03J.
9. FULL DROP PIPE CONFIGURATION NOT SHOWN FOR CLARITY.
10. PUMP ROTATION SHALL BE AS FOLLOWS: P6(STANDBY)–>P101, P105–>P102, P104–>P103, P103–>P104, P102–>P105, P101–>P106(STANDBY).
11. CONTRACTOR TO CONFIRM SIZE AND LOCATION OF THE WET WELL HATCHES PER HATCH AND PUMP MANUFACTURER REQUIREMENTS
12. PUMP AND ANCHOR BOLTS ARE THE BE ADHESIVE TYPE, AND EMBEDDED IN THE CONCRETE SLAB. CONTRACTOR TO SUBMIT DESIGN OF PUMP ANCHOR BOLTS AND PATTERN, INCLUDING CALCULATIONS, DURING SHOP DRAWINGS SUBMISSION.
13. ALL PIPING IN THE WET WELL SHALL BE FLANGED. NO FLANGED COUPLING ADAPTORS, OR VICTAULIC STYLE COUPLINGS SHALL BE PERMITTED INSIDE OF THE WET WELL.
14. ACCESS HATCHES SHALL BE FOREST GREEN. SAFETY GRATING SHALL BE FURNISHED WITH SAFETY ORANGE POWDER COAT FINISH.
15. INSTALL PLUG VALVES TO OPEN UPWARD AND TO CLOSE TO A SEATING POSITION.
16. INSTALL CHECK VALVES SO THAT THE WEIGHT LEVER POSITION IS APPROXIMATELY 45 DEGREES BELOW THE VALVE HORIZONTAL CENTER LINE IN THE CLOSE POSITION AND APPROXIMATELY 45 DEGREES ABOVE THE HORIZONTAL CENTER LINE IN THE FULL OPEN POSITION.
17. PROPOSED LEVEL RADARS AND FLOAT SHOWN FOR REFERENCE. REFER TO (WDF–C–10) FOR SIZE AND LOCATION.

LEGEND

- X/X — DETAIL NO. / SHEET NO.
- EXIST. CONCRETE
- PROP. CONCRETE
- PROP. FLOWABLE FILL

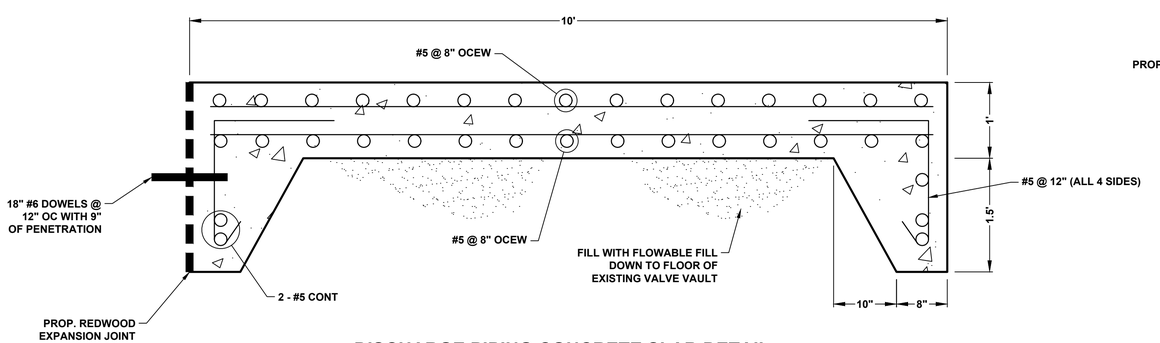

DISCHARGE PIPING CONCRETE SLAB DETAIL

SCALE: 1" = 1'

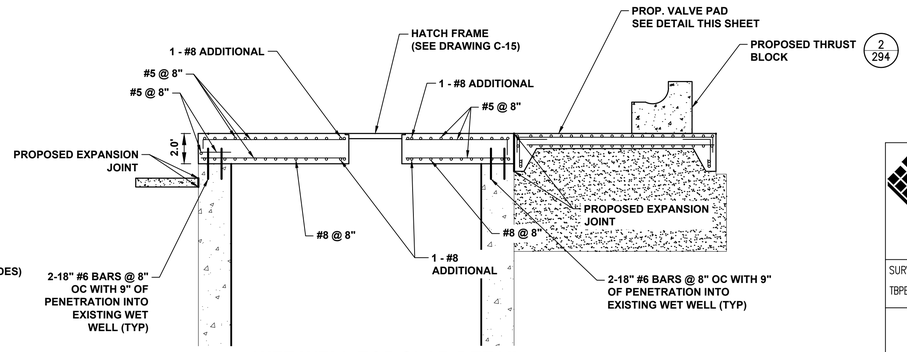

WET WELL TOP SLAB DETAIL

SCALE: 1"=5'

NO.	DATE	REVISION	APP.

IDS Engineering Group
13430 NW. Freeway, Suite 700
Houston, Tx. 77040
713.462.3178
TxEng Firm 2726 | TxSurv Firm 10110700

SURVEYED BY: KUO & ASSOCIATES, INC.
TBPE FIRM #F-4578; TBPLS FIRM #1007560

THIS DOCUMENT IS RELEASED FOR THE PURPOSE OF REVIEW UNDER THE AUTHORITY OF MARCEL KHOUW, P.E. 101807 ON 12/17/2025. IT IS NOT TO BE USED FOR CONSTRUCTION PURPOSES.

CITY OF HOUSTON
HOUSTON PUBLIC WORKS

LIFT STATION RENEWAL AND REPLACEMENT FY 2023

WOODFOREST LIFT STATION ELEVATION SECTION

WBS NUMBER	FOR CITY OF HOUSTON USE ONLY
R–000267–0179–4	
DRAWING SCALE	
HORIZ: AS NOTED VERT: N/A	
CITY OF HOUSTON PM	
NAWARAJ PANTA, P.E.	

DWG. NO.	SHEET NO. 234 OF 321
WDF–C–11	

FILE PATH: \\dseg.com\FS\Projects\0000\0005708500 CoH Lift Stations – FY 2023\CAD\DWG\PRODUCTION\234–WOODFOREST ELEV SECTION.dwg

PLOTTED: 12/17/2025 8:32 AM

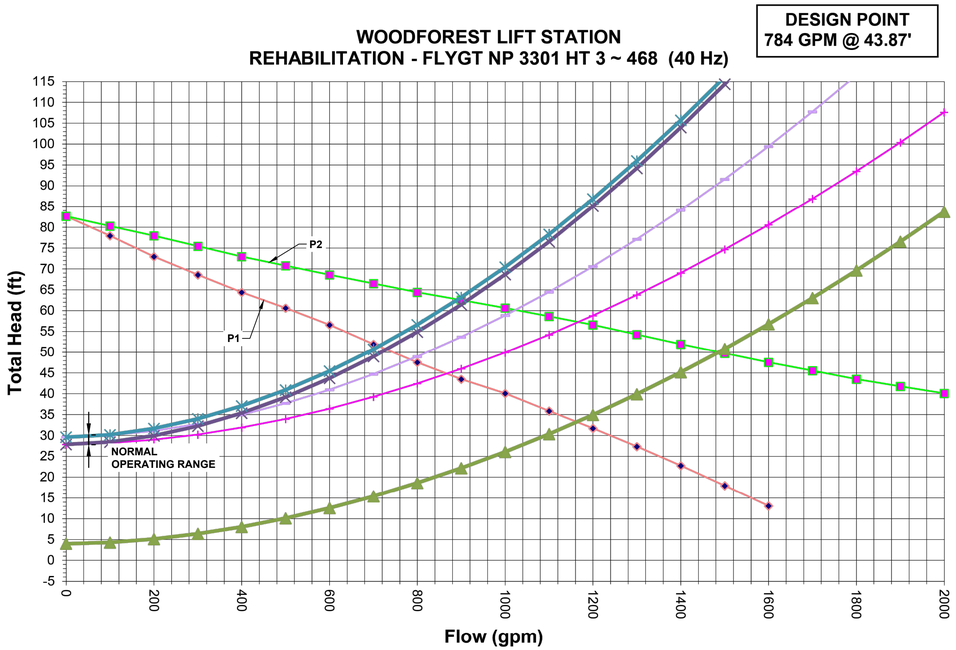

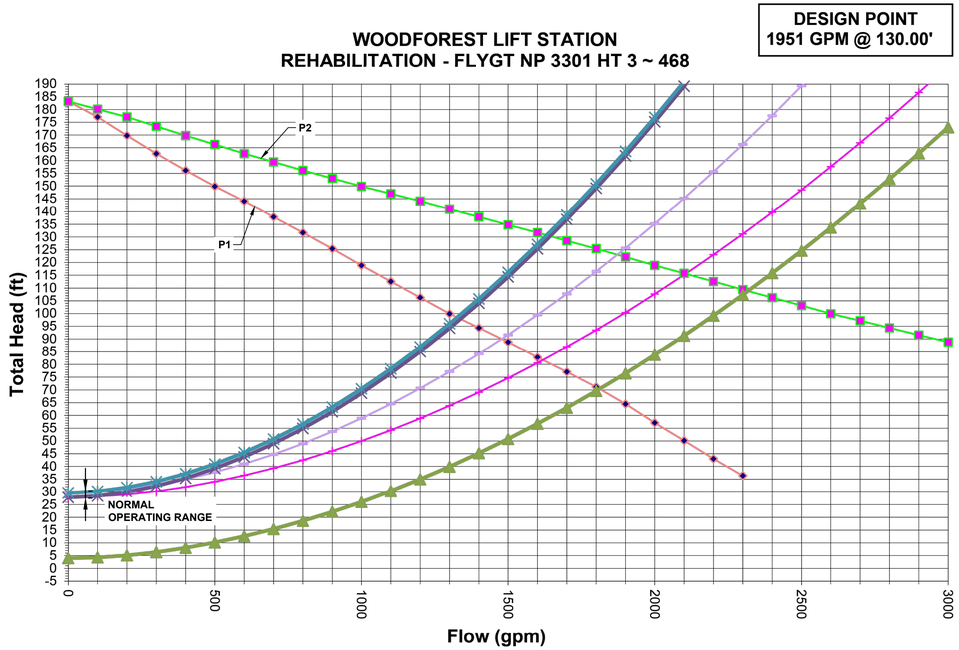

STATION OPERATING TABLES

PROPOSED CONDITION - 2.81 MGD

RISING WATER LEVEL

WATER LEVEL ELEVATION	ACTION	PUMP(S) IN OPERATION
2.00	PUMPS OFF LEVEL - NO ACTION	ALL PUMPS OFF
3.25	LEAD PUMP (40 HZ) TURNS ON	LEAD PUMP (40 HZ) ON
3.88	LAG PUMP (40 HZ) TURNS ON	LEAD AND LAG PUMP (40 HZ) ON
6.38	LEAD PUMP (60 HZ) TURNS ON	LEAD (60 HZ) AND LAG PUMP (40 HZ) ON
7.01	LAG PUMP (60 HZ) TURNS ON	LEAD AND LAG PUMP (60 HZ) ON
7.67	STANDBY PUMP TURNS ON	ALL PUMPS ON
8.17	HIGH WATER ALARM ON	HIGH WATER ALARM SOUND

FALLING WATER LEVEL

WATER LEVEL ELEVATION	ACTION	PUMP(S) IN OPERATION
8.17	HIGH WATER ALARM ON	HIGH WATER ALARM SOUND
7.67	HIGH WATER LEVEL ALARM OFF	ALL PUMPS ON
7.01	STANDBY PUMP TURNS OFF	LEAD AND LAG (60 HZ) PUMP ON
6.38	LEAD PUMP (60 HZ) TURNS OFF	LEAD PUMP (40 HZ) AND LAG PUMP (60 HZ) ON
3.88	LAG PUMP (60 HZ) TURNS OFF	LEAD PUMP (40 HZ) AND LAG PUMP (40 HZ) ON
3.25	LEAD PUMP (40 HZ) TURNS OFF	LAG PUMP (40 HZ) ON
2.00	LAG PUMP (40 HZ) TURNS OFF	ALL PUMPS STOPPED - STANDBY PUMP SWITCHES TO LEAD PUMP PUMP ON

PUMP DATA TABLE*

PUMP CHARACTERISTICS	PUMP NO. 1	PUMP NO. 2	PUMP NO. 3
MOTOR DATA			
NOMIMAL SIZE (HP)	85	85	85
MAX SPEED (RPM)	1775	1775	1775
SOLIDS PASSAGE			
MINIMUM SPHERE (IN)	3	3	3
CAPACITY (GPM)			
DESIGN	1500	1500	1500
RUNOUT	2300	2300	2300
Actual Cumulative Flow	1,478	1,873	
DISCHARGE HEAD (FT)			
DESIGN	89.9	89.9	89.9
RUNOUT	36	36	36
SHUT OFF	183.0	183.0	183.0
EFFICIENCY (%)			
DESIGN	68.5	68.5	68.5
NPSHR (FT)			
DESIGN	19.0	19.0	19.0

*FLYGT NP 3301 HT 3 ~ 468 used for all pump calculations.

NO.	DATE	REVISION	APP.

IDS Engineering Group
13430 NW. Freeway, Suite 700
Houston, Tx. 77040
713.462.3178
TxEng Firm 2726 | TxSurv Firm 10110700

SURVEYED BY: KUO & ASSOCIATES, INC.
TBPE FIRM #F-4578; TBPLS FIRM #1007560

THIS DOCUMENT IS RELEASED FOR THE PURPOSE OF REVIEW UNDER THE AUTHORITY OF MARCEL KHOUW, P.E. 101807 ON 12/17/2025. IT IS NOT TO BE USED FOR CONSTRUCTION PURPOSES.

CITY OF HOUSTON
HOUSTON PUBLIC WORKS

LIFT STATION RENEWAL AND REPLACEMENT FY 2023

MECHANICAL LIFT STATION PUMP DATA TABLES

WBS NUMBER	FOR CITY OF HOUSTON USE ONLY
R-000267-0179-4	
DRAWING SCALE	
HORIZ: N/A VERT: N/A	
CITY OF HOUSTON PM	
DWG. NO.	NAWARAJ PANTA, P.E.
WDF-C-12	SHEET NO. 235 OF 321

FILE PATH: \\idseg.com\FS\Projects\0000\005708500 CoH Lift Stations - FY 2023\CAD\DWG\PRODUCTION\235-WOODFOREST LS PUMP DATA.dwg

PLOTTED: 12/17/2025 8:32 AM

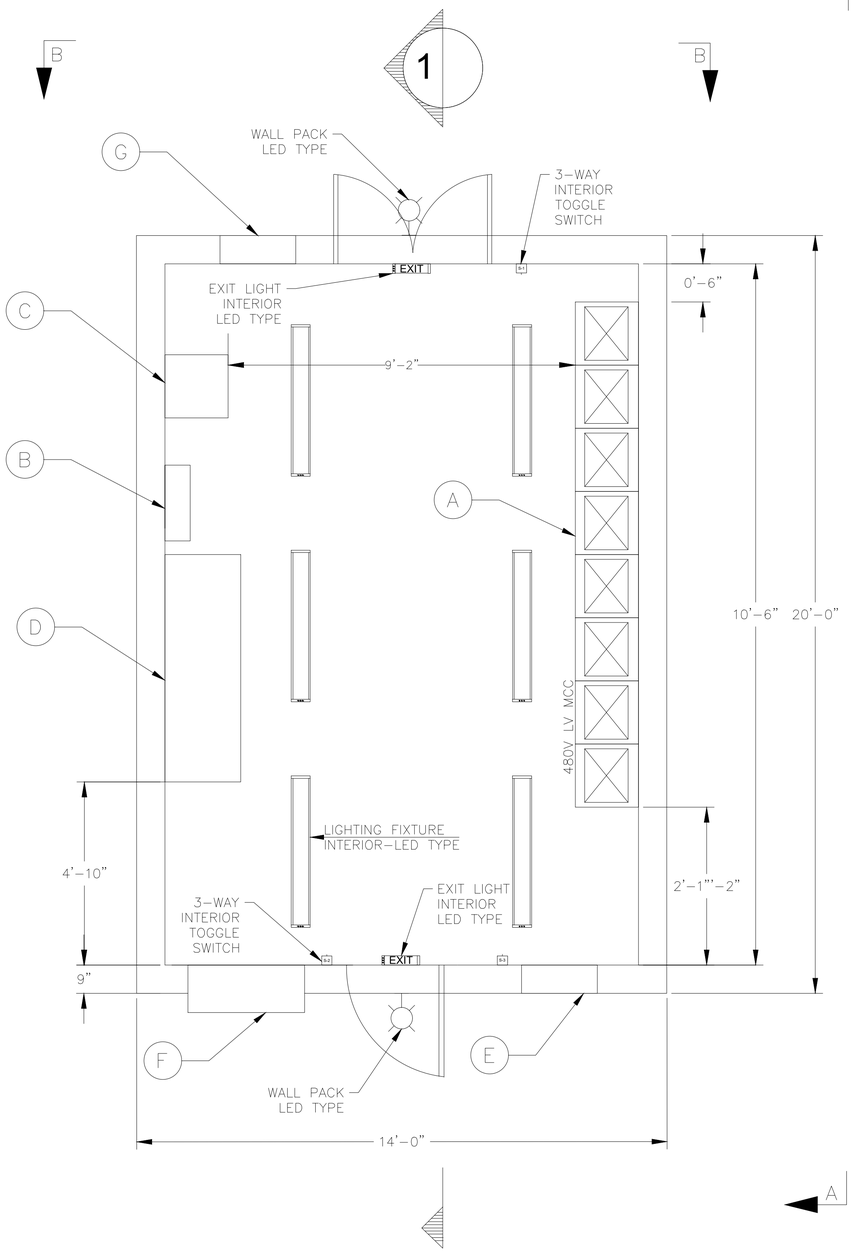

FLOOR PLAN

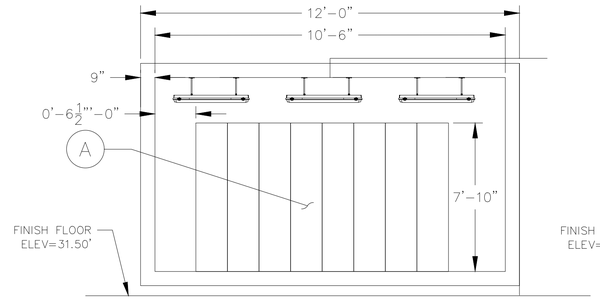

TYPICAL SECTION-1
SCALE: NTS

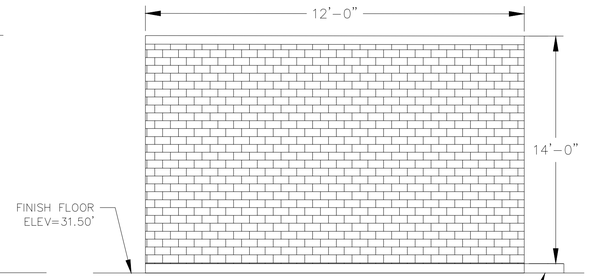

SIDE ELEVATION A
SCALE: NTS

EQUIPMENT PAD DETAIL
SCALE: NTS

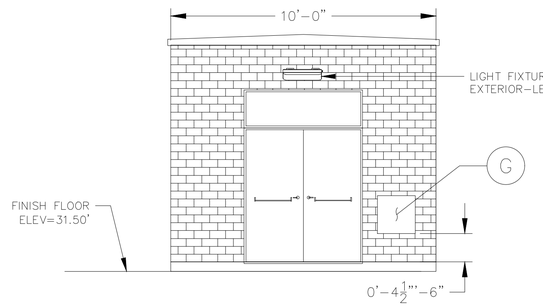

BACK ELEVATION B
SCALE: N.T.S.

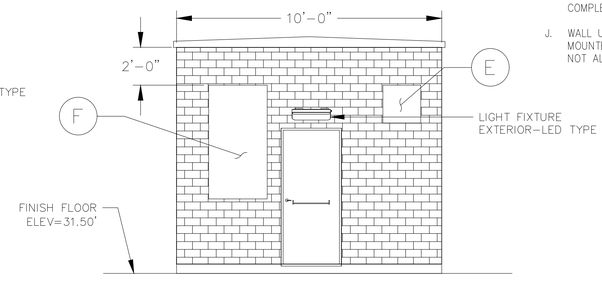

FRONT ELEVATION C
SCALE: N.T.S.

NOTES TO DESIGN ENGINEER:

A. THESE LIFT STATION DRAWINGS ARE CONSIDERED TO BE DESIGN GUIDELINES FOR THE CONSTRUCTION OF CITY OF HOUSTON WASTEWATER SUBMERSIBLE LIFT STATIONS. THEIR INTENDED USE IS A FRAMEWORK FOR THE CONTRACTED DESIGN ENGINEER IN DEVELOPING SPECIFIC LIFT STATION DESIGNS.

IT IS THE RESPONSIBILITY OF THE CONTRACTED DESIGN ENGINEER TO VERIFY THE COMPLETENESS AND ACCURACY OF THE INFORMATION HEREIN CONTAINED AND TO ADJUST ACCORDING TO SPECIFIC SITE REQUIREMENTS.

B. CONTROL BUILDINGS SHALL BE PRECAST CONCRETE. DESIGN ENGINEER IS RESPONSIBLE FOR FOUNDATION DESIGN AS REQUIRED FOR SITE SPECIFIC GEOTECHNICAL RECOMMENDATIONS.

C. THERE ARE FIVE (5) STANDARD CONTROL BUILDING CONFIGURATION COORDINATE WITH ELEVATION SHEETS FOR APPLICABLE BUILDING.

D. DESIGN ENGINEER SHALL PROVIDE A NORTH ARROW ADJACENT TO THE FLOOR PLAN.

E. THE DESIGN ENGINEER SHALL VERIFY THE STRUCTURAL ADEQUACY OF THE BUILDING DESIGN.

F. CONTROL BUILDING ELEVATION MUST COMPLY WITH THE LATEST VERSION OF THE FLOODPLAIN ORDINANCE. THE DESIGN ENGINEER IS RESPONSIBLE FOR DESIGN ELEVATED PLATFORMS AND RELATED APPURTENANCES.

G. THE DESIGN ENGINEER SHALL INCORPORATE ONLY THE NECESSARY STANDARD GUIDELINE DRAWINGS AND DETAILS INTO HIS/HER PROJECT CONTRACT DOCUMENTATION PACKAGE, AND SHALL ADJUST PAGE NUMBERS AND CROSS REFERENCE ACCORDINGLY.

H. THE DESIGN ENGINEER SHALL CONSULT THE CITY OF HOUSTON DESIGN GUIDELINES MANUAL, THE ENGINEERING DESIGN MANUAL, AND THE MASTER SPECIFICATIONS FOR FURTHER INSTRUCTIONS AND INFORMATION PERTINENT TO THESE STANDARD DESIGN GUIDELINE DRAWINGS.

I. THE DESIGN ENGINEER SHALL REMOVE THESE NOTES, ALL REFERENCES TO THESE NOTES, AND ANY OTHER EXTRANEOUS INFORMATION FROM THE DESIGN GUIDELINE DRAWINGS. DESIGN ENGINEER SHALL PROVIDE ANY NOTES OR OTHER APPROPRIATE INFORMATION NECESSARY TO COMPLETE THE LIFT STATION DESIGN.

J. WALL UNIT SHALL BE HEAVY-DUTY EXTERIOR WALL MOUNTED HEAT PUMP TYPE UNIT. WINDOW AC UNITS ARE NOT ALLOWED.

NO.	DATE	REVISION	APP.

NOTES:

1. THE BUILDING IS GENERAL PURPOSE, NON-CLASSIFIED, NON-BLAST RATED.
2. ELECTRICAL CONDUITS INTO CONTROL BUILDING SHALL BE LOCATED AND POSITIONED PRIOR TO POURING BUILDING FOUNDATION OR IF PRECAST.
3. THE HVAC UNITS SHALL BE SIZED BASED ON HEAT LOSS CALCULATIONS. COORDINATE AC/HEAT PUMP OPENING SIZE WITH SELECTED MANUFACTURE'S RECOMMENDATIONS.
4. BUILDING DOOR SHALL BE OF 316 STAINLESS STEEL TYPE.
5. THE SINGLE ENTRANCE DOORS SHALL BE 36" (WIDE) X 84" (HEIGHT).
6. THE DOUBLE ENTRANCE DOORS SHALL BE 72" (WIDE), 84" (HEIGHT), WITH 24" HIGH.
7. OPENINGS FOR BELTLESS FAN (24"X24") ON TOP OF WALL ELEVATION WITH 24"X24" LOUVER ON THE BOTTOM. BOTH UNITS SHALL BE PROVIDED WITH REMOVABLE COVERS FOR STANDBY USE.
8. FOR LIGHTING PLAN SEE SHEET ZOE05.

EQUIPMENT IDENTIFICATION LIST

ITEM	TAG NO.	DESCRIPTION
A		480V MCC
B		480 V - 240 / 120 V SINGLE PHASE POWER PANEL BOARD
C		480 V - 240 / 120 V SINGLE PHASE LIGHTING TRANSFORMER
D		CONTROL PANEL
E		EXHAUST FAN
F		WALL MOUNTED HVAC UNIT/ W SS BURGLAR BARS (NOTE J)
G		LOUVER

IDS Engineering Group
13430 NW. Freeway, Suite 700
Houston, Tx. 77040
713.462.3178
TxEng Firm 2726 | TxSurv Firm 10110700

SURVEYED BY: KUO & ASSOCIATES, INC.
TBPE FIRM #F-4578; TBPLS FIRM #1007560

THIS DOCUMENT IS RELEASED FOR THE PURPOSE OF REVIEW UNDER THE AUTHORITY OF MARCEL KHOUW, P.E. 101807 ON 12/17/2025. IT IS NOT TO BE USED FOR CONSTRUCTION PURPOSES.

CITY OF HOUSTON
HOUSTON PUBLIC WORKS

LIFT STATION RENEWAL AND REPLACEMENT FY 2023

ARCHITECTURAL PRECAST CONCRRETE CONTROL BUILDING 4

WBS NUMBER	FOR CITY OF HOUSTON USE ONLY
R-000267-0179-4	
DRAWING SCALE	
HORIZ: N.T.S. VERT: N/A	
CITY OF HOUSTON PM	
NAWARAJ PANTA, P.E.	
SHEET NO. 236 OF 321	

DWG. NO. WDF-A-01

FILE PATH: \\idseg.com\FS\Projects\0000\005708500 CoH Lift Stations - FY 2023\CAD\DWG\PRODUCTION\236-WOODFOREST PROP BLDG.dwg

PLOTTED: 12/17/2025 8:32 AM

ITEM	DESCRIPTION
1	CORE, RIDGID CLOSED CELL, SELF-EXTINGUISHING POLYISOCYANURATE
2	DOOR, RTM MOLDED FIBERGLASS, 36" x 78" SMOOTH GEL-COAT BOTH SIDES
3	HEX HEAD BOLT, S.S., 3/8x 1 1/4, w/WASHER
4	NUTSERTS, 3/8 - 16 NC, WIDE-FLANGE ALUMINUM
5	ROOF PANEL ALUMINUM EXTRUSION
6	JOINT GASKET, 3x 1/4 POLYURETHANE SPONGE
7	FLOOR GASKET, 4x 1/4 NEOPRENE SPONGE
8	FRONT & BACK PANEL ALUMINUM EXTRUSION
9	DOOR HINGE, S.S., 2 1/2" OPEN PIANO TYPE
10	FASTENER, POP RIVET
11	DOOR GASKET, NEOPRENE HOLLOW BULB TRIM SEAL
12	LOUVRE, 6" DIA PVC W/SCREEN, ADJUSTABLE
13	LIFTING EYEBOLT - 3/4 - 10 CADMIUM PLATED
14	EYEBOLT SUPPORT, ST 6x2x1, ENCAPSULATED

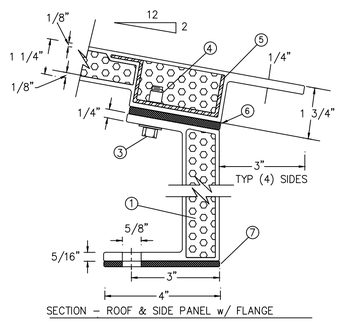

SECTION - ROOF & SIDE PANEL w/ FLANGE

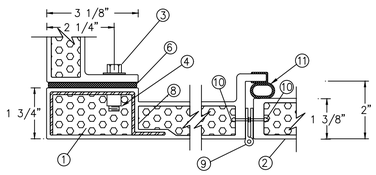

SECTION - SIDE & FRONT PANEL W/DOOR MOUNTING

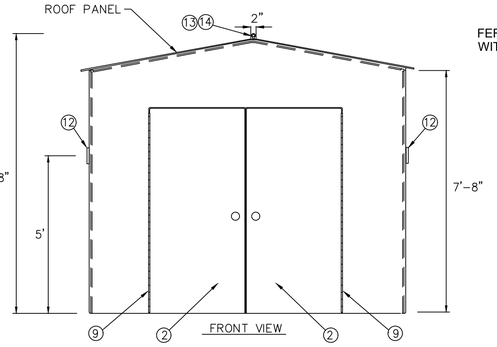

FRONT VIEW

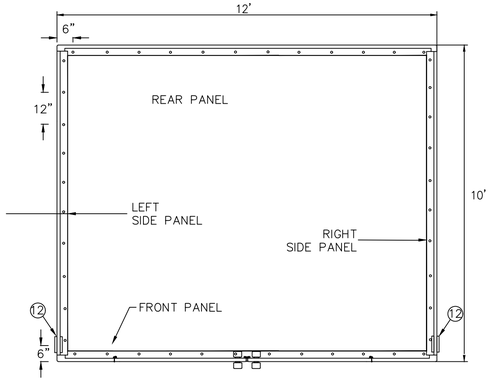

PLAN VIEW - BELOW ROOF

FERROUS SULFATE PROCESS FLOW SCHEMATIC

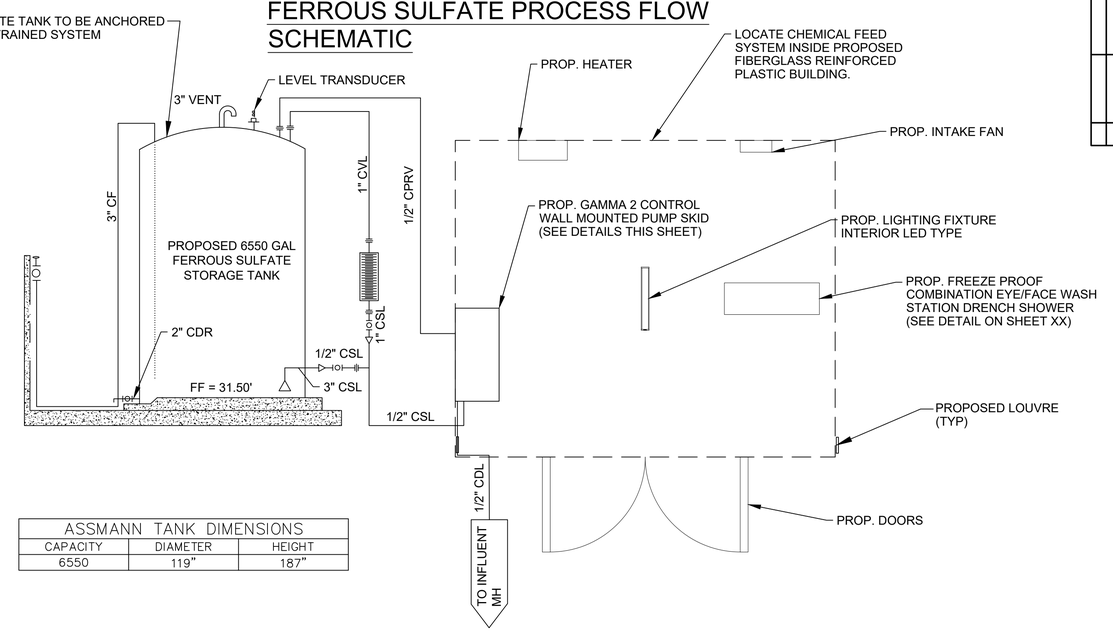

ASSMANN TANK DIMENSIONS		
CAPACITY	DIAMETER	HEIGHT
6550	119"	187"

NO.	DATE	REVISION	APP.

IDS Engineering Group
13430 NW. Freeway, Suite 700
Houston, Tx. 77040
713.462.3178
TxEng Firm 2726 | TxSurv Firm 10110700

SURVEYED BY: KUO & ASSOCIATES, INC.
TBPE FIRM #F-4578; TBPLS FIRM #1007560

THIS DOCUMENT IS RELEASED FOR THE PURPOSE OF REVIEW UNDER THE AUTHORITY OF MARCEL KHOUW, P.E. 101807 ON 12/17/2025. IT IS NOT TO BE USED FOR CONSTRUCTION PURPOSES.

CITY OF HOUSTON
HOUSTON PUBLIC WORKS

LIFT STATION RENEWAL AND REPLACEMENT FY 2023

WOODFOREST LIFT STATION FRP BUILDING DETAIL

WBS NUMBER	FOR CITY OF HOUSTON USE ONLY
R-000267-0179-4	
DRAWING SCALE	
HORIZ: N.T.S. VERT: N/A	
CITY OF HOUSTON PM	
NAWARAJ PANTA, P.E.	
SHEET NO. 237 OF 321	

DWG. NO. WDF-A-02

FILE PATH: \\idseg.com\FS\Projects\0000\005708500 CoH Lift Stations - FY 2023\CAD\DWG\PRODUCTION\237-WOODFOREST FRP BLDG.dwg

PLOTTED: 12/17/2025 8:33 AM

FILE PATH: \\idseg.com\FS\Projects\0000\005708500 CoH Lift Stations - FY 2023\CAD\DWG\PRODUCTION\238-WOODFOREST RECORD DWG.dwg

NO.	DATE	REVISION	APP.

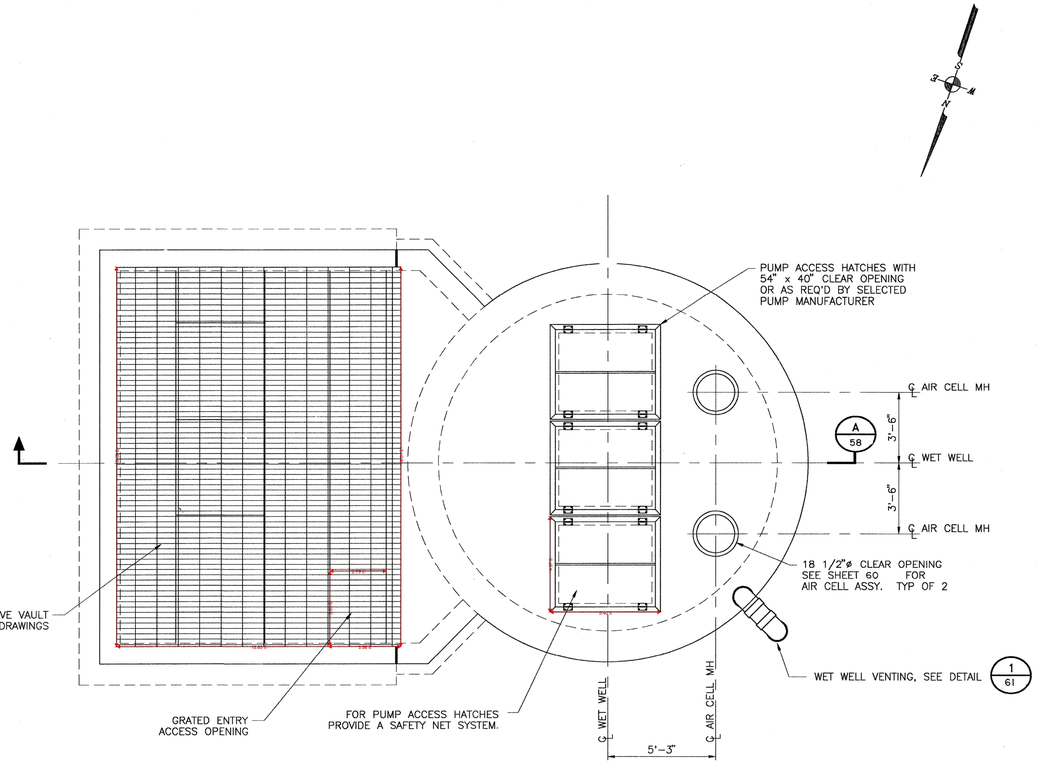

PLAN VIEW @ GRADE

NOTES:

1. SEE DETAIL AND STRUCTURAL DRAWINGS FOR DIMENSIONS AND INFORMATION NOT SHOWN.
2. CONTRACTOR TO CONFIRM SIZE AND LOCATION OF THE WET WELL HATCHES PER SELECTED HATCH AND PUMP MANUFACTURERS' REQUIREMENTS.

r.g.miller engineers
since 1966
1313 sherwood forest
houston, texas 77043
(713) 461-9600

PLAN VIEW @ GRADE
3 PUMPS @ 250 - 2000 GPM PER PUMP
LOW PROFILE, SECURED SITE CONFIGURATION

PROJECT NO: GFS NO. R-0018-20-3

TITLE: CITY OF HOUSTON
WOODFOREST LIFT STATION

CITY OF HOUSTON
DEPARTMENT OF PUBLIC WORKS AND ENGINEERING
ENGINEERING, CONSTRUCTION AND REAL ESTATE GROUP

SECTION APPROVALS

WATER ENGINEERING — TRAFFIC AND SIGNAL ENGINEERING
WASTEWATER ENGINEERING — STREET & BRIDGE ENGINEERING
STORM SEWER ENGINEERING — CONSTRUCTION

OTHER DEPARTMENTS

PLANNING AND DEVELOPMENT — SPONSOR DEPARTMENT

CITY ENGINEER — DATE 3/19/97
DIRECTOR OF PUBLIC WORKS AND ENGINEERING — DATE 3/19/97

SUBMITTED:
SCALE: 3/8" = 1'-0"
DATE: DECEMBER,1996
SURVEY BY:
F B NO:

DESIGNED BY: K.G.
DRAWN BY:
SHEET NO. 57 OF 98 SHEETS
CITY DWG NO: 33308
C57

SEAL: JACK P. MILLER, 60610, REGISTERED PROFESSIONAL ENGINEER, STATE OF TEXAS, 2-25-97

CADD DWG FILE NO:

COHSTD.BDR

0 1 2 3 ORIGINAL SCALE IN INCHES FOR REDUCED PLANS

REV NO	DESCRIPTION	APP'D	DATE

IDS Engineering Group
13430 NW. Freeway, Suite 700
Houston, Tx. 77040
713.462.3178
TxEng Firm 2726 | TxSurv Firm 10110700

SURVEYED BY: KUO & ASSOCIATES, INC.
TBPE FIRM #F-4578; TBPLS FIRM #1007560

THIS DOCUMENT IS RELEASED FOR THE PURPOSE OF REVIEW UNDER THE AUTHORITY OF MARCEL KHOUW, P.E. 101807 ON 12/17/2025. IT IS NOT TO BE USED FOR CONSTRUCTION PURPOSES.

CITY OF HOUSTON
HOUSTON PUBLIC WORKS

LIFT STATION RENEWAL AND REPLACEMENT FY 2023

EXISTING LIFT STATION RECORD DRAWING (SHEET 1 OF 3)

WBS NUMBER	FOR CITY OF HOUSTON USE ONLY
R-000267-0179-4	
DRAWING SCALE	
HORIZ: N.T.S. VERT: N/A	
CITY OF HOUSTON PM	
NAWARAJ PANTA, P.E.	

DWG. NO. WDF-C-13

SHEET NO. 238 OF 321

FOR REFERENCE ONLY

PLOTTED: 12/17/2025 8:33 AM
FILE PATH: \\idseg.com\FS\Projects\0000\005708500 CoH Lift Stations - FY 2023\CAD\DWG\PRODUCTION\239-WOODFOREST RECORD DWG.dwg

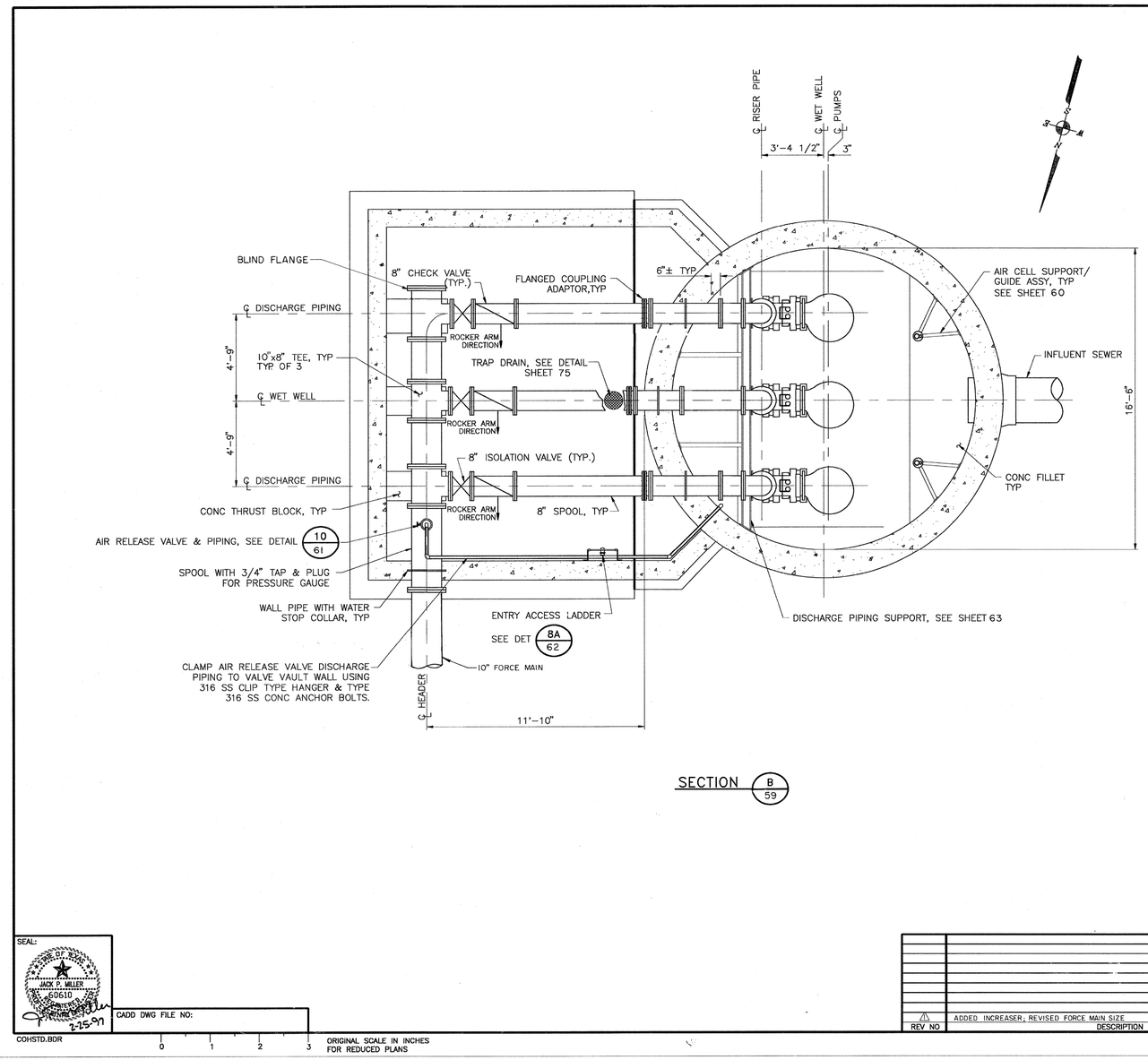

SECTION B/59

NOTES:

1. SEE DETAIL AND STRUCTURAL DRAWINGS FOR DIMENSIONS AND INFORMATION NOT SHOWN.
2. DIMENSIONS NOTED ARE RELATIVE TO THE PUMP SIZE AND MANUFACTURER SELECTED. CONTRACTOR SHALL CONFIRM.

SEAL: JACK P. MILLER, LICENSED PROFESSIONAL ENGINEER, 68610, STATE OF TEXAS, 2-25-97

CADD DWG FILE NO:

COHSTD.BDR

0 1 2 3 ORIGINAL SCALE IN INCHES FOR REDUCED PLANS

REV NO	DESCRIPTION	APP'D	DATE
1	ADDED INCREASER; REVISED FORCE MAIN SIZE		11/4/97

NO.	DATE	REVISION	APP.

r.g.miller engineers since 1966
1313 sherwood forest
houston, texas 77043
(713) 461-9600

BASE SECTION
3 PUMPS @ 250 -- 2000 GPM PER PUMP
LOW PROFILE, SECURED SITE CONFIGURATION

PROJECT NO: GFS NO. R-0018-20-3

TITLE: CITY OF HOUSTON WOODFOREST LIFT STATION

CITY OF HOUSTON
DEPARTMENT OF PUBLIC WORKS AND ENGINEERING
ENGINEERING, CONSTRUCTION AND REAL ESTATE GROUP

SECTION APPROVALS

WATER ENGINEERING — TRAFFIC AND SIGNAL ENGINEERING 3/7/97
WASTEWATER ENGINEERING 3/7/97 — STREET & BRIDGE ENGINEERING
STORM SEWER ENGINEERING — CONSTRUCTION 3/6/97

OTHER DEPARTMENTS

PLANNING AND DEVELOPMENT — SPONSOR DEPARTMENT

CITY ENGINEER — DATE 3/10/97
DIRECTOR OF PUBLIC WORKS AND ENGINEERING — DATE 3/13/97

SUBMITTED:
SCALE:
DATE: DECEMBER,1996
SURVEY BY:
F. B NO:
DESIGNED BY: K.G.
DRAWN BY:
SHEET NO.59 OF 98 SHEETS
CITY DWG NO: 33308 C59

IDS Engineering Group
13430 NW. Freeway, Suite 700
Houston, Tx. 77040
713.462.3178
TxEng Firm 2726 | TxSurv Firm 10110700

SURVEYED BY: KUO & ASSOCIATES, INC.
TBPE FIRM #F-4578; TBPLS FIRM #1007560

THIS DOCUMENT IS RELEASED FOR THE PURPOSE OF REVIEW UNDER THE AUTHORITY OF MARCEL KHOUW, P.E. 101807 ON 12/17/2025. IT IS NOT TO BE USED FOR CONSTRUCTION PURPOSES.

CITY OF HOUSTON
HOUSTON PUBLIC WORKS

LIFT STATION RENEWAL AND REPLACEMENT FY 2023

EXISTING LIFT STATION RECORD DRAWING (SHEET 2 OF 3)

WBS NUMBER	FOR CITY OF HOUSTON USE ONLY
R-000267-0179-4	
DRAWING SCALE	
HORIZ: N.T.S. VERT: N/A	
CITY OF HOUSTON PM	
NAWARAJ PANTA, P.E.	
SHEET NO. 239 OF 321	

DWG. NO. WDF-C-14

FOR REFERENCE ONLY

PLOTTED: 12/17/2025 8:33 AM

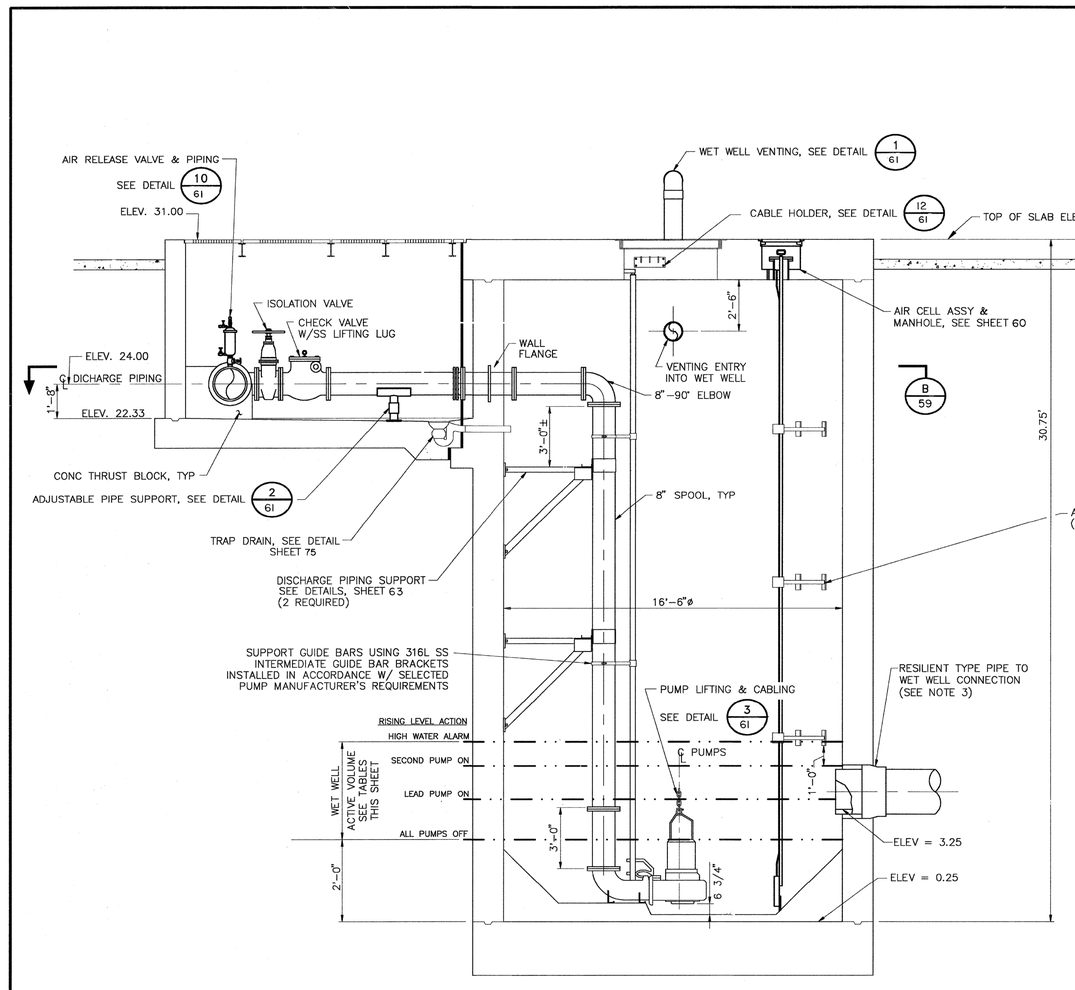

SECTION A/58

ALL WET WELL FILLETS NOT SHOWN FOR CLARITY

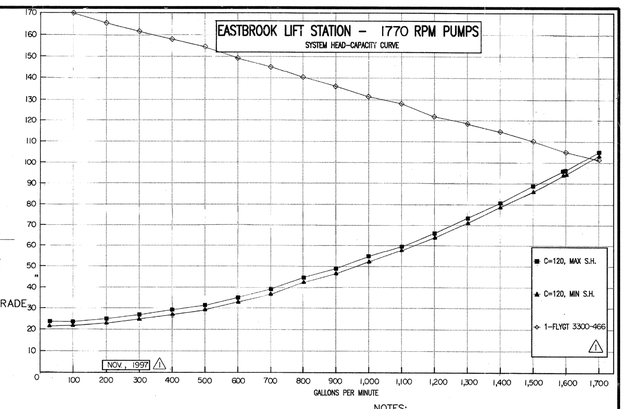

NOTES:
1. DIMENSIONS NOTED ARE RELATIVE TO THE PUMP SIZE AND MANUFACTURER SELECTED. CONTRACTOR SHALL VERIFY.
2. SEE DETAIL AND STRUCTURAL DRAWINGS FOR DIMENSIONS AND INFORMATION NOT SHOWN.
3. CONTRACTOR TO PROVIDE DETAIL FOR PIPE TO WET WELL CONNECTION DURING SHOP DRAWING SUBMISSION. EXTEND INFLUENT SEWER 4'-6" INSIDE WET WELL.

STATION OPERATION TABLES

NAME		
RISING LEVEL CYCLE		
WATER LEVEL ELEVATION	ACTION	PUMP(S) IN OPERATION
2.25	PUMPS OFF LEVEL – NO ACTION	ALL PUMPS ARE OFF
3.25	LEAD PUMP TURNS ON	LEAD PUMP ON
4.00	SECOND PUMP TURNS ON	LEAD & SECOND PUMP ON
4.75	HIGH WATER ALARM ON	HIGH WATER ALARM SOUND
FALLING LEVEL CYCLE		
WATER LEVEL ELEVATION	ACTION	PUMP(S) IN OPERATION
4.00	HIGH WATER LEVEL ALARM OFF	ALL PUMPS ON
3.25	LEAD PUMP TURNS OFF	SECOND PUMP ON
2.25	SECOND PUMP TURNS OFF	ALL PUMPS STOPPED – STANDBY PUMP SWITCHES TO LEAD PUMP

PUMP(S) IN OPERATION	OPERATING CAPACITY		NOMINAL PUMP SPEED RPM	MINIMUM PUMP DISCHARGE SIZE
	TOTAL GPM	T.D. HEAD IN FEET		
ONE PUMP ALONE	1597	96.63	1770	8"

SEAL: JACK P. MILLER, 50610, LICENSED PROFESSIONAL ENGINEER, STATE OF TEXAS, 2-25-97

CADD DWG FILE NO: COHSTD.BDR

0 1 2 3 ORIGINAL SCALE IN INCHES FOR REDUCED PLANS

REV NO	DESCRIPTION	APP'D	DATE
1	REVISED PUMP HP AND CAPACITY		11/6/97

r.g.miller engineers
since 1986
1313 sherwood forest
houston, texas 77043
(713) 461-9600

ELEVATION SECTION
3 PUMPS @ 250 – 2000 GPM PER PUMP
LOW PROFILE, SECURED SITE CONFIGURATION

PROJECT NO: GFS NO. R-0018-20-3

TITLE: CITY OF HOUSTON WOODFOREST LIFT STATION

CITY OF HOUSTON
DEPARTMENT OF PUBLIC WORKS AND ENGINEERING
ENGINEERING, CONSTRUCTION AND REAL ESTATE GROUP

SECTION APPROVALS

WATER ENGINEERING — TRAFFIC AND SIGNAL ENGINEERING
WASTEWATER ENGINEERING — STREET & BRIDGE ENGINEERING
STORM SEWER ENGINEERING — CONSTRUCTION

OTHER DEPARTMENTS

PLANNING AND DEVELOPMENT — SPONSOR DEPARTMENT

CITY ENGINEER — DATE: 3/10/97
DIRECTOR OF PUBLIC WORKS AND ENGINEERING — DATE: 3/13/97

SUBMITTED:
SCALE: 3/8" = 1'-0"
DATE: DECEMBER, 1996
SURVEY BY:
F B NO:

DESIGNED BY: K.G.
DRAWN BY:
SHEET NO. 58 OF 98 SHEETS
CITY DWG NO: 53308 C58

IDS Engineering Group
13430 NW. Freeway, Suite 700
Houston, Tx. 77040
713.462.3178
TxEng Firm 2726 | TxSurv Firm 10110700

SURVEYED BY: KUO & ASSOCIATES, INC.
TBPE FIRM #F-4578; TBPLS FIRM #1007560

THIS DOCUMENT IS RELEASED FOR THE PURPOSE OF REVIEW UNDER THE AUTHORITY OF MARCEL KHOUW, P.E. 101807 ON 12/17/2025. IT IS NOT TO BE USED FOR CONSTRUCTION PURPOSES.

CITY OF HOUSTON
HOUSTON PUBLIC WORKS

LIFT STATION RENEWAL AND REPLACEMENT FY 2023

EXISTING LIFT STATION RECORD DRAWING (SHEET 3 OF 3)

WBS NUMBER	FOR CITY OF HOUSTON USE ONLY
R-000267-0179-4	
DRAWING SCALE	
HORIZ: N.T.S. VERT: N/A	
CITY OF HOUSTON PM	
NAWARAJ PANTA, P.E.	

DWG. NO. WDF-C-15

SHEET NO. 240 OF 321

FOR REFERENCE ONLY

NO.	DATE	REVISION	APP.

FILE PATH: \\idseg.com\FS\Projects\0000\005708500 CoH Lift Stations – FY 2023\CAD\DWG\PRODUCTION\240-WOODFOREST RECORD DWG.dwg

RAISED SLAB

EXPLODED 3D MODEL OF STRUCTURE
IS ONLY FOR VISUAL REFERENCE, AND
SHALL NOT BE USED TO GATHER
STRUCTURAL INFORMATION

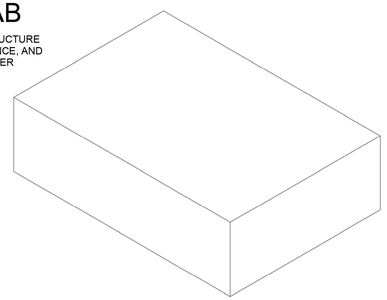

PREFAB BUILDING BY OTHERS

ISOMETRIC 3D MODEL OF STRUCTURE
IS ONLY FOR VISUAL REFERENCE, AND
SHALL NOT BE USED TO GATHER
STRUCTURAL INFORMATION

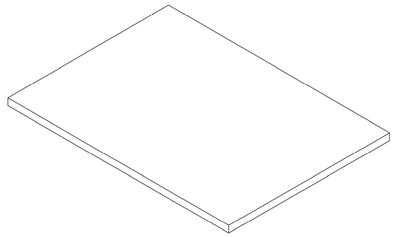

STRUCTURAL SLAB

ISOMETRIC 3D MODEL OF STRUCTURE
IS ONLY FOR VISUAL REFERENCE, AND
SHALL NOT BE USED TO GATHER
STRUCTURAL INFORMATION

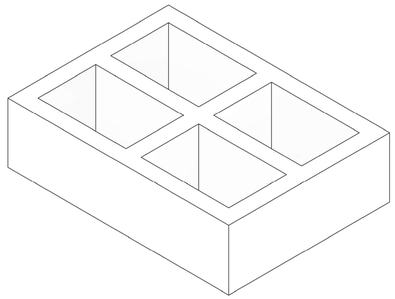

BEAMS

ISOMETRIC 3D MODEL OF STRUCTURE
IS ONLY FOR VISUAL REFERENCE, AND
SHALL NOT BE USED TO GATHER
STRUCTURAL INFORMATION

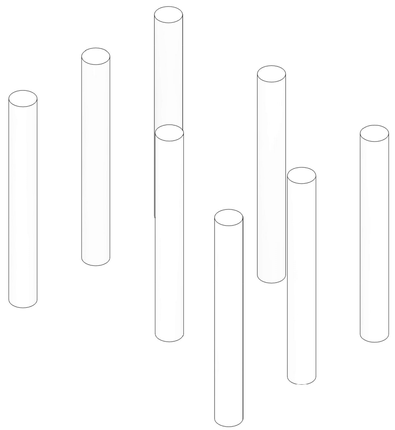

STRAIGHT SHAFTS

ISOMETRIC 3D MODEL OF STRUCTURE
IS ONLY FOR VISUAL REFERENCE, AND
SHALL NOT BE USED TO GATHER
STRUCTURAL INFORMATION

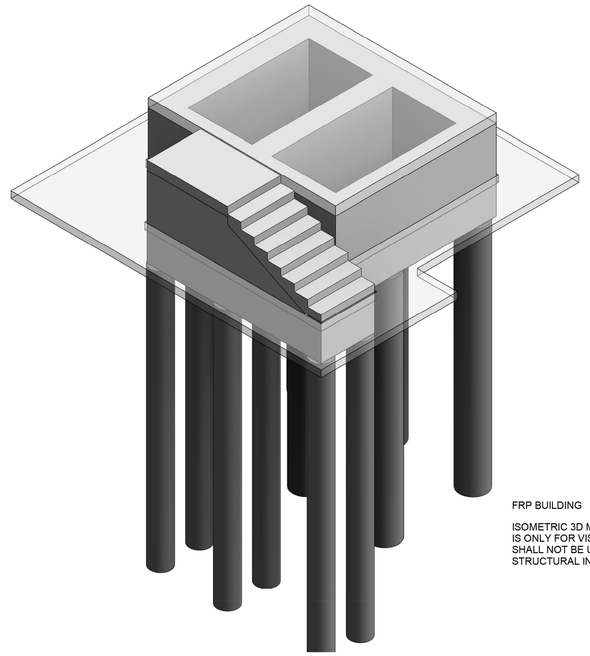

FRP BUILDING

ISOMETRIC 3D MODEL OF STRUCTURE
IS ONLY FOR VISUAL REFERENCE, AND
SHALL NOT BE USED TO GATHER
STRUCTURAL INFORMATION

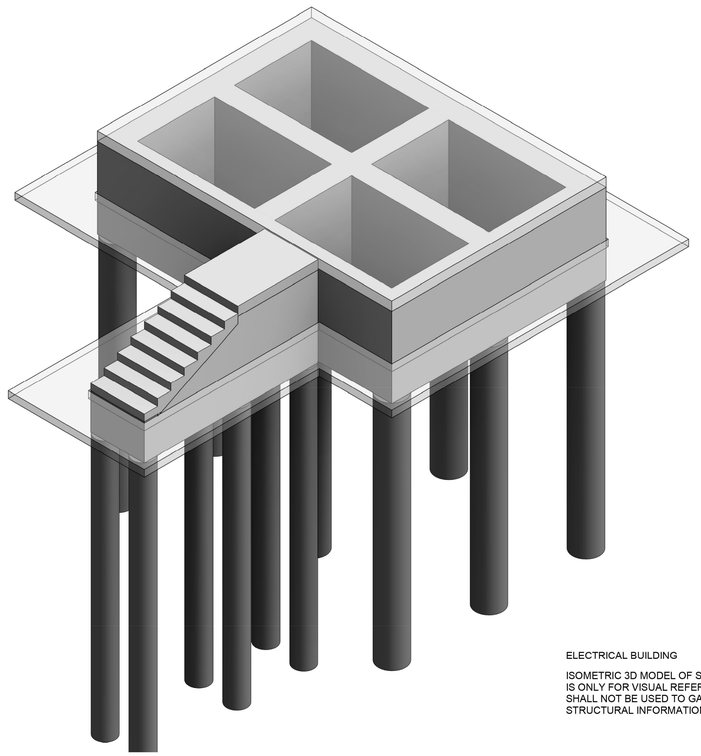

ELECTRICAL BUILDING

ISOMETRIC 3D MODEL OF STRUCTURE
IS ONLY FOR VISUAL REFERENCE, AND
SHALL NOT BE USED TO GATHER
STRUCTURAL INFORMATION

NO.	DATE	REVISION	APP.

P.E. SEAL
REQUIRED

PRELIMINARY

SUBJECT TO REVISION

This document is released for informational purposes under the authority of DAVID MOORE P.E. 139405 on 12/11/2025 It is not to be used for regulatory approval, permit, bidding, or construction purposes.

CONCEPT ENGINEERS
TX. FIRM REGISTRATION # F-04417
Structures for the whole community

IDS Engineering Group
13430 NW. Freeway
Suite 700
Houston, Tx. 77040
713.462.3178
TxEng Firm 2726
TxSurv Firm 10110700

CITY OF HOUSTON
HOUSTON PUBLIC WORKS

LIFT STATION RENEWAL
AND REPLACEMENT FY 2023

COVER SHEET – 3D MODEL

WBS NUMBER	FOR CITY OF HOUSTON USE ONLY
R-000267-0179-4	
DRAWING SCALE	
AS NOTED	
CITY OF HOUSTON PM	
NAWARAJ PANTA, P.E.	
SHEET NO. 241 OF 321	

DWG. NO. WDF-S-01

DESIGN CRITERIA

1. DESIGN CODE INTERNATIONAL BUILDING CODE 2021 WITH CITY OF HOUSTON AMENDMENTS

2. DESIGN LOADS:

   A. LIVE LOADS: (PSF)DEAD LOADS

SLABS OF GRADE	100	PSF	FRP BUILDING WEIGHT	XX LBS
STORAGE & MECHANICAL	150	PSF	ELECTRICAL BUILDING WEIGHT	95,000 LBS

   B. DEAD LOADS (SUPERIMPOSED)

SLABS OF GRADE	15	PSF
STORAGE & MECHANICAL	15	PSF

	UNIFORM LOADS	CONCENTRATED LOADS
STAIRS & EXISTING WAY	100 PSF	300 LBS
HANDRAILS & GUARD RAILS	50 LB/FT	200 LBS

3. WIND SPEED 146 MPH 3 SEC. GUST (ULTIMATE)
   EXPOSURE CATEGORY "C"
   RISK CATEGORY III
   DESIGN WIND FORCE ON FRP BUILDING XX LBS
   DESIGN WIND FORCE ON ELECTRICAL BUILDING XX LBS

GENERAL NOTES

1. THE CONTRACTOR SHALL COMPARE THE STRUCTURAL DRAWINGS WITH THE ARCHITECTURAL, CIVIL, PLUMBING, MECHANICAL AND ELECTRICAL DRAWINGS AS TO LAYOUT DIMENSIONS AND ELEVATIONS. ALL DISCREPANCIES, IF ANY ARE FOUND, SHALL BE REPORTED TO THE ARCHITECT FOR PROPER ADJUSTMENT BEFORE PROCEEDING WITH WORK. ANY DISCREPANCIES WITH THE STRUCTURAL DOCUMENTS SHALL BE IMMEDIATELY BROUGHT TO THE ATTENTION OF THE ARCHITECT/ENGINEER PRIOR TO THE SUBMISSION OF BIDS OF PROPOSALS, BEFORE COMMENCING THE WORK IN QUESTION. NO FIELD CHANGES OR DEVIATIONS FROM THE DESIGN ARE TO BE MADE WITHOUT PRIOR WRITTEN APPROVAL OF THE ARCHITECT AND/OR STRUCTURAL ENGINEER. NO CHANGE ORDER CONSIDERATION WILL BE GIVEN TO CHANGES FOR WHICH THE ARCHITECT AND/OR ENGINEER WERE NOT CONTACTED PRIOR TO CONSTRUCTION OF THE AFFECTED ITEM.

2. IN THE EVENT THAT CERTAIN FEATURES OF THE CONSTRUCTION ARE NOT FULLY SHOWN IN THE DRAWING OR CALLED OUT IN THE STRUCTURAL NOTES OR IN THE SPECIFICATIONS, THEN SUCH CONSTRUCTION SHALL BE IN THE SAME CHARACTER FOR SIMILAR CONDITIONS THAT ARE SHOWN OR CALLED FOR.

3. SEE ARCHITECTURAL DRAWINGS FOR FLOOR ELEVATIONS, SLOPE, AND THE LOCATION OF DEPRESSED FLOOR AREAS, AND OTHER REQUIREMENTS AT COLUMNS, WALLS, STAIRWELLS, SLABS, ETC. THE CONTRACTOR SHALL COMPARE THE STRUCTURAL SECTIONS WITH THE ARCHITECTURAL SECTIONS AND REPORT ANY DISCREPANCY TO THE ARCHITECT PRIOR TO FABRICATING OR INSTALLING STRUCTURAL MEMBERS.

4. PRINCIPAL OPENINGS THROUGH THE FRAMING ARE SHOWN ON DRAWINGS. THE CONTRACTOR SHALL EXAMINE THE ARCHITECTURAL AND MECHANICAL DRAWINGS FOR THE REQUIRED OPENINGS AS HE SHALL PROVIDE FOR ALL OPENINGS WHETHER SHOWN ON THE DRAWINGS OR NOT AND SHALL VERIFY SIZE AND LOCATION OF ALL OPENINGS WITH THE MECHANICAL CONTRACTOR. ANY DEVIATION FROM THE OPENINGS SHOWN ON THE STRUCTURAL DRAWINGS SHALL BE BROUGHT TO THE ENGINEER'S ATTENTION FOR APPROVAL.

5. REFER TO THE SPECIFICATIONS PROVIDED WITH THIS SUBMITTAL FOR THE REQUIRED STRUCTURAL SUBMITTALS THAT MUST BE SUBMITTED FOR E.O.R. REVIEW.

6. SPECIFICATIONS ARE PART OF THE CONSTRUCTION DOCUMENTS AND MUST BE USED IN CONJUNCTION WITH THE DRAWINGS.

7. DETAILS LABELED "TYPICAL DETAILS" ON DRAWINGS APPLY TO SITUATIONS OCCURRING ON THE PROJECT THAT ARE THE SAME OR SIMILAR TO THOSE SPECIFICALLY DETAILED, SUCH DETAILS APPLY WHETHER OR NOT THEY ARE REFERENCED AT EACH LOCATION. NOTIFY E.O.R. OF CONFLICTS REGARDING APPLICABILITY OF "TYPICAL DETAILS".

8. DO NOT LOAD THE SLAB ON GRADE WITH ERECTION CRANES OR ERECTION EQUIPMENT. THE SLAB HAS NOT BEEN DESIGNED FOR CRANE LOADS AND WILL REQUIRE AN INCREASE OF THICKNESS AND/OR REINFORCEMENT. OBTAIN E.O.R. APPROVAL ON PROPOSED CRANE SUPPORT PLAN FOR SLABS PRIOR TO COMMENCING WORK.

9. DO NOT STORE OR STACK CONSTRUCTION MATERIALS ON POURED OR ERECTED FLOOR/ROOFS IN EXCESS OF 80 PERCENT OF LIVE LOAD. CONTRACTOR SHALL ENSURE THAT ALL SUB-CONTRACTORS ARE INFORMED OF LOAD RESTRICTIONS. AVOID IMPACT WHEN PLACING MATERIALS OF POURED OR ERECTED SLABS FLOOR OR ROOF.

10. THE CONTRACT STRUCTURAL DOCUMENTS REPRESENT THE FINISHED STRUCTURE. THE CONTRACTOR IS RESPONSIBLE FOR THE MEANS OR METHODS OF CONSTRUCTION, PROVIDE ALL MEASURES REQUIRED TO PROTECT THE STRUCTURE, WORKMEN AND OTHER PERSONS DURING CONSTRUCTION; INCLUDING SHORING FOR CONSTRUCTION EQUIPMENT, SHORING FOR THE BUILDING, FORMS AND SCAFFOLDING, SHORING FOR THE RETAINING WALLS AND OTHER TEMPORARY SUPPORTS REQUIRED.

11. ALL STAIR MEMBERS INCLUDING, BUT NOT LIMITED TO, STRINGERS AND HANDRAILS SHALL BE DESIGNED BY STAIR ENGINEER AND STEEL FABRICATOR.

12. SHOP DRAWINGS AND OTHER ITEMS SHALL BE SUBMITTED TO THE ENGINEER FOR REVIEW PRIOR TO FABRICATION. ALL SHOP DRAWINGS SHALL BE REVIEWED BY THE GENERAL CONTRACTOR BEFORE SUBMITTAL. THE ENGINEER'S REVIEW IS TO BE FOR CONFORMANCE WITH THE DESIGN CONCEPT AND GENERAL COMPLIANCE WITH THE RELEVANT CONTRACT DOCUMENTS. THE ENGINEER'S REVIEW DOES NOT RELIEVE THE CONTRACTOR OF THE SOLE RESPONSIBILITY TO REVIEW, CHECK AND COORDINATE THE SHOP DRAWINGS PRIOR TO SUBMISSION. THE CONTRACTOR REMAINS SOLELY RESPONSIBLE FOR ERRORS AND OMISSIONS ASSOCIATED WITH THE PREPARATION OF SHOP DRAWINGS AS THEY PERTAIN TO MEMBER SIZES, DETAILS, DIMENSIONS, ETC.

13. SHOP DRAWINGS SHALL BE PREPARED WITH SUFFICIENT DETAIL AND NOTATION FOR FIELD ERECTION AND INSTALLATION. PHOTO COPIES OF THE CONTRACT DRAWINGS FOR USE AS SHOP DRAWINGS WILL NOT BE PERMITTED.

FOUNDATION NOTES

1. THE FOUNDATION SYSTEM HAS BEEN DESIGNED BASED ON THE FOLLOWING RECOMMENDATIONS SPECIFIED IN THE GEOTECHNICAL INVESTIGATION REPORT NUMBER HGT2210460.1.1 (D) BY HVJ ASSOCIATES, INC., DATED 10/24/2025. THE FOUNDATION SYSTEM IS DRILLED STRAIGHT SHAFTS AND AND HAS BEEN DESIGNED USING THE CAPACITIES THAT CAN BE FOUND IN THE GEOTECHNICAL REPORT. REFER TO PLAN FOR TOTAL DEPTH BELOW EXISTING GRADE. CONCRETE SHOULD BE PLACED IN THE DRILLED HOLES WITHIN FOUR HOURS OF EXCAVATION TO REDUCE THE RISK OF GROUNDWATER SEEPAGE, DETERIORATION OF THE FOUNDATION BEARING SURFACE AND UNDERREAM COLLAPSE. REFER TO THE GEOTECHNICAL REPORT.

2. THE CONTRACTOR MUST OBTAIN A COPY OF THE GEOTECHNICAL REPORT DESCRIBED ABOVE AND FOLLOW ALL RECOMMENDATIONS IN REGARDS TO SOIL PREPARATION, COMPACTION, REMOVAL AND FILL REQUIREMENTS AS NECESSARY TO ACHIEVE THE DESIGN SOIL BEARING PRESSURE CAPACITY IF REQUIRED.

3. IN GENERAL SITE PREPARATION SHOULD CONSIST OF REMOVING ANY EXISTING FOUNDATIONS, PAVED AREAS, GRASS, TREE ROOTS, AND STRIPPING ORGANIC TOP SOILS. THE EXPOSED SUBGRADE SHOULD BE PROOF-ROLLED TO DETECT LOCAL WEAK AREAS WHICH SHOULD BE EXCAVATED, PROCESSED, AND RECOMPACTED IN LOOSE LIFTS OF APPROXIMATELY EIGHT-INCH THICKNESS. IN FLOOR SLAB, SUBGRADE SOILS SHOULD BE COMPACTED TO A MINIMUM OF 95% OR THE PROCTOR MAXIMUM DRY DENSITY (ASTM D698) AT A MOISTURE CONTENT WITHIN -1% TO +3% OF MAXIMUM MOISTURE. TREE STUMPS, IF PRESENT, SHOULD BE REMOVED BELOW FLOOR SLAB OR PAVEMENT GRADE, AND REMOVE 2 FEET OF EXISTING SOIL AND REPLACE WITH SELECTED FILL AS PER CITY OF HOUSTON STANDARD CONSTRUCTION SPECIFICATIONS. REFER TO GEOTECHNICAL REPORT.

4. SEE CIVIL DRAWINGS FOR ALL EXTERIOR SLABS AND CURBS AND LIMITS OF EXCAVATION.

5. DURING THE PLACEMENT AND FINISHING OF SLAB, USE FOGGING OR MISTING EQUIPMENT TO APPLY MOISTURE TO THE SLAB AREAS UNTIL FINAL CURING HAS BEGUN TO AVOID EXCESSIVELY RAPID EVAPORATION OF WATER FROM THE SLAB. DO NOT USE SPRAY WATER BOTTLES THAT APPLY LARGE AMOUNTS OF WATER THE SLAB SURFACE

6. FOR ALL REINFORCED CONCRETE FOUNDATION MEMBERS, CONTRACTOR SHALL FOLLOW ALL THE APPLICABLE ITEMS ON THE "REINFORCED CONCRETE NOTES:".

7. PROTECT PIPES AND CONDUITS RUNNING THROUGH WALLS AND SLABS WITH 1/2" EXPANSION MATERIAL.

8. DO NOT PLACE FOOTINGS OR SLABS AGAINST SUBGRADE CONTAINING FREE WATER.

9. MAINTAIN PROPER SITE DRAINAGE DURING CONSTRUCTION TO ENSURE SURFACE RUNOFF AWAY FROM STRUCTURES AND TO PREVENT PONDING OF SURFACE RUNOFF NEAR THE STRUCTURES.

10. KEEP OPEN EXCAVATIONS AROUND BUILDING DRY, BACKFILL AGAINST FOUNDATIONS AND GRADE BEAMS AS SOON AS PRACTICAL. PUMP WATER OUT OF OPEN EXCAVATIONS OF FLOODING PRIOR TO BACKFILLING.

REINFORCED CONCRETE NOTES

1. DETAILING OF CONCRETE REINFORCEMENT AND ACCESSORIES SHALL BE IN ACCORDANCE WITH ACI PUBLICATION 315, LATEST EDITION.

2. CONCRETE REINFORCING SHALL CONFORM TO THE REQUIREMENTS OF ASTM A-615, GRADE 60. WELDED WIRE FABRIC SHALL BE IN ACCORDANCE WITH ASTM A-185.

3. CONCRETE IN ALL AREAS SHALL HAVE SAND AND GRAVEL AGGREGATE CEMENT CONFORMING TO ASTM C 150, TYPE I, AND DESIGNATED COMPRESSIVE STRENGTH (f'c) AT 28 DAYS AS CALLED OUT IN NOTE #4 BELOW. ALSO SEE PROJECT SPECIFICATIONS FOR DIFFERENT AGGREGATE AND COMPRESSIVE STRENGTH REQUIREMENTS.

4. UNLESS NOTED OTHERWISE, CONCRETE SHALL MEET OR EXCEED THE MINIMUM COMPRESSIVE STRENGTH REQUIREMENTS AT 28 DAYS:

   A. CONCRETE DESIGN STRENGTH:

      a. GRADE BEAMS & SLABS ON GRADE: f'c = 4,000 PSI

      b. PIER CAPS, WALLS, STAIRS & ANY OTHER NOT NOTED: f'c = 4,000 PSI

      c. PIERS: f'c = 4,000 PSI

   B. CONCRETE COVER REINFORCEMENT COVER SHALL MEET THE FOLLOWING REQUIREMENTS (UNLESS SPECIFICALLY OTHERWISE IN PLANS):

a. SLAB ON GRADE	1" TOP
b. GRADE BEAMS	1 1/2" TOP, 3" BOTTOM, 2" SIDES
c. DRILLED PIERS	3" ALL SURFACES
d. COLUMNS	1 1/2" ALL SURFACES

   (SEE SECTION 20.6 ACI 318-19 FOR CONDITIONS NOT NOTED.

5. FLY ASH MAY BE USED TO REPLACE A PORTION OF THE PORTLAND CEMENT, THE RATIO OF FLY ASH TO THE TOTAL OF THE FLY ASH AND CEMENT IN A MIX SHALL NOT EXCEED 20%. FLY ASH SHALL CONFORM TO ASTM C618, TYPE C OR F.

6. IT SHALL BE THE RESPONSIBILITY OF THE CONTRACTOR TO COORDINATE WITH THE CONCRETE SUPPLIER TO ENSURE A PUMPABLE AND WORKABLE MIX. TESTING LAB WILL CONTROL SLUMP AND ONLY TESTING LAB CAN ADD WATER ON JOB SITE. CONCRETE SUPPLIER WILL INFORM TESTING LAB/CONTRACTOR OF MAXIMUM WATER ALLOWABLE THAT CAN BE ADDED ON JOB SITE BEFORE W/C RATIO IS EXCEEDED. THE USE OF PLASTICIZERS, RETARDANTS AND OTHER ADDITIVES SHALL BE AT THE OPTION OF THE CONTRACTOR SUBJECT TO THE APPROVAL OF THE STRUCTURAL ENGINEER. FOLLOW THE RECOMMENDATIONS OF THE MANUFACTURER FOR THE PROPER USE OF ADDITIVES. THE USE OF CALCIUM CHLORIDE OR OTHER CHLORIDE BEARING SALTS SHALL NOT BE PERMITTED.

7. CONCRETE SLUMP TESTS SHALL BE MADE BEFORE AND AFTER THE ADDITION OF ADMIXTURES AND MAY BE TAKEN AT THE BACK OF THE TRUCK. CONCRETE FOR THE PREPARATION OF TEST CYLINDERS SHALL BE TAKEN FROM THE HOSE END FOR CONCRETE PLACED BY PUMP.

8. ALL REINFORCING STEEL SHALL BE LAPPED PER THE LATEST EDITION OF THE ACI-318-19. SPLICES. CORNERS AND INTERSECTIONS WITH STANDARD 90 DEGREE BEND OR CORNER BARS. LAP TOP BARS AT CENTER OF SPAN. LAP WELDED WIRE MESH ONE FULL MESH AT SIDE AND END LAPS. DO NOT LAP OR WELD REINFORCEMENT IN THE FIELD UNLESS SPECIFICALLY SHOWN ON STRUCTURAL DRAWINGS OR APPROVED BY E.O.R. WHEN SPECIFICALLY APPROVED, PROVIDE WELDED REINFORCEMENT IN ACCORDANCE WITH ASTM A706. USE LOW HYDROGEN ELECTRODES FOR WELDING OF REINFORCEMENT IN CONFORMANCE WITH "WELDING STEEL, METAL INSERTS AND CONNECTIONS IN REINFORCED CONCRETE CONSTRUCTION" AMERICAN WELDING SOCIETY AWS D1.4 WHERE REQUIRED, PROVIDE DOWELS TO MATCH SIZE AND SPACING OF MAIN REINFORCING.

9. REFER TO ARCHITECTURAL, MECHANICAL, ELECTRICAL AND PLUMBING DRAWINGS FOR ANY OTHER ADDITIONAL SLEEVES, ANCHORS, VENT OPENINGS, ETC., NOT SHOWN ON STRUCTURAL PLANS THAT MIGHT BE REQUIRED.

10. PLACE CONCRETE IN A MANNER SO AS TO PREVENT SEGREGATION OF THE MIX. DELAY FLOATING AND TROWELLING OPERATIONS UNTIL CONCRETE HAS LOST SURFACE WATER SHEEN OR ALL FREE WATER. DO NOT SPRINKLE FREE CEMENT ON THE SLAB SURFACE. FINISHING OF SLAB SURFACES SHALL COMPLY WITH THE RECOMMENDATIONS OF AC1 302.1 AND 304.

11. UNLESS NOTED OTHERWISE ON PLAN, CONTROL JOINTS IN SLAB ON GRADE TO BE LOCATED APPROXIMATELY 225 SQ. FT. GRIDS. ACTUAL LOCATION TO BE DETERMINED BY OWNER OR CONTRACTOR.

12. PROVIDE 7 DAY CURING OF SLAB IMMEDIATELY AFTER FINISHING, USING ONE OF THE FOLLOWING METHODS

   A. CONTINUOUSLY WATERED BURLAP

   B. WATERPROOF MEMBRANES

13. PROTECT THE CONCRETE SURFACE BETWEEN FINISHING OPERATIONS ON HOT, DRY WINDY DAYS OR ANY OTHER TIME THAT PLASTIC SHRINKAGE CRACKS COULD DEVELOP BY USING WET BURLAP, PLASTIC MEMBRANE OR FOGGING. PROTECT CONCRETE SLAB AT ALL TIMES FROM RAIN, HAIL OR OTHER INJURIOUS EFFECTS.

14. UNLESS SPECIFIED CONCRETE MUST REACH THE FOLLOWING PERCENTAGES OF ITS 28-DAY COMPRESSIVE STRENGTH (F'c), BEFORE FORMS MAY BE REMOVED. 40% WALLS, COLUMNS & BEAM SIDES, 70% JOISTS, PANS & BEAM BOTTOMS (IF RESHORED), 85% SHORING FOR FLOOR SYSTEMS (IF NOT SHORED)

15. AN INDEPENDENT CERTIFIED TESTING LABORATORY SHALL VERIFY AND PROVIDE REPORTS CERTIFYING THE FOLLOWING:

   A. CONCRETE PLANT BATCH TICKETS FOR EACH TRUCK TO VERIFY THAT THE CONCRETE MATCHES THE APPROVED DESIGN MIX.

   B. CONCRETE SLUMP IS IN ACCORDANCE WITH APPROVED DESIGN MIX.

   C. CONCRETE PLACEMENT PREPARATIONS ARE IN ACCORDANCE WITH ACI SPECIFICATIONS.

   D. CONTROL / CONTRACTION JOINTS ARE INSTALLED WITHIN THE ACI TIME ALLOWANCE.

   E. PROPER CURING METHODS ARE BEING UTILIZED.

16. NO CONCRETE SHALL BE PLACED OUTSIDE OF THESE SPECIFICATIONS WITHOUT THE ENGINEER'S APPROVAL, ANY ITEMS NOT IN COMPLIANCE WITH THE OUTLINED SPECIFICATION SHALL BE REPORTED TO THE ARCHITECT AND STRUCTURAL ENGINEER WITHIN 24 HOURS.

17. REFER TO ARCHITECTURAL DRAWINGS FOR WATER PROOFING REQUIREMENTS.

18. UNLESS OTHERWISE NOTED ALL VERTICAL REINFORCEMENT ON COLUMNS SHALL BE SPLICED A MINIMUM OF 36 BAR DIAMETERS.

19. THE SHORES FOR THE FLOOR SLAB & BEAMS SHALL BE ADEQUATE TO CARRY THE TOTAL WEIGHT OF THE SLAB SYSTEM TO THE GROUND, ALL SHORING / RESHORING DESIGN SHALL BE THE RESPONSIBILITY OF THE CONTRACTOR.

20. THERE SHALL BE NO HORIZONTAL CONSTRUCTION JOINTS IN CONCRETE POURS. ALL CONSTRUCTION JOINTS SHALL BE MADE IN THE MIDDLE OF THE SPAN. WHEN A BEAM INTERSECTS A GIRDER AT MIDDLE 1/3 OF SPAN, THE JOINTS SHALL BE OFFSET DISTANCE EQUAL TO TWICE THE WIDTH OF THE BEAM. THE LOCATION OF CONSTRUCTION JOINTS SHALL BE APPROVED BY THE STRUCTURAL ENGINEER. ADDITIONAL REINFORCING AT CONSTRUCTION JOINTS SHALL BE SPECIFIED BY THE BEGINNER, SEE TYPICAL DETAIL. PROVIDE 75 FEET MAXIMUM SPACING OF CONSTRUCTION JOINTS IN GRADE BEAMS.

21. THE MAXIMUM WATER TO CEMENT RATIO: 0.50 (MAX) FOR NON-AIR ENTRAINED. AND 0.48 (MAX) FOR AIR ENTRAINED.

22. MAX. AGGREGATE SIZE 3/4 INCH.

23. PROVIDE BAR SUPPORT ACCESSORIES IN ACCORDANCE WITH THE LATEST ACI MANUAL, STANDARD PRACTICE FOR DETAILING REINFORCED CONCRETE STRUCTURES, SUPPORT BEAM REINFORCING ON BEAMS BOLSTERS SPACED NOT MORE THAN 4 FEET ON CENTER.

24. PROVIDE BAR SUPPORTS WITH PLASTIC COATED LEGS OR HOT DIP GALVANIZING AFTER FABRICATION FOR CONCRETE EXPOSED TO VIEW. PROVIDE STAINLESS STEEL BAR SUPPORTS FOR CONCRETE TO RECEIVE A SAND BLAST FINISH.

25. FOR PIPE INSTALLED HORIZONTALLY WITHIN THE SLAB, PROVIDE MAXIMUMS OUTSIDE DIAMETER OF 30% OF SLAB THICKNESS. PLACE CONDUIT OR PIPE BETWEEN THE TOP AND BOTTOM LAYER OF REINFORCEMENT WITH THE CENTER THIRD OF SLAB, DO NOT SPACE CONDUITS OF PIPES CLOSER THAN THREE DIAMETERS OF WIDTHS ON CENTER.

26. CONTRACTOR AND SUPPLIER TO COORDINATE ADDITIONAL ADMIXTURES AND SUBMIT MIX DESIGNS AS REQUIRED FOR MASS CONCRETE. AFTER COMPLETION OF THE EQUIPMENT FOUNDATION, THE CONCRETE SHALL BE INSPECTED AND ALL CRACKS FROM SHRINKAGE AND CONSTRUCTION STRESS SHALL BE REPAIRED.

REINFORCED CONCRETE NOTES CONTINUED

TENSION DEVELOPMENT LENGTH ('ld')

BAR SIZE	f'c= 3000 PSI ld TOP	ld BOT	f'c= 4000 PSI ld TOP	ld BOT	f'c= 5000 PSI ld TOP	ld BOT	f'c= 6000 PSI ld TOP	ld BOT	f'c= 7000 PSI ld TOP	ld BOT	f'c= 8000 PSI ld TOP	ld BOT	f'c= 10000 PSI ld TOP	ld BOT
#3	1'-9"	1'-4"	1'-6"	1'-2"	1'-5"	1'-1"	1'-3"	1'-0"	1'-2"	1'-0"	1'-1"	1'-0"	1'-0"	1'-0"
#4	2'-4"	1'-10"	2'-1"	1'-7"	1'-10"	1'5"	1'-8"	1'-3"	1'-7"	1'-2"	1'-5"	1'-1"	1'-4"	1'-0"
#5	3'-0"	2'-3"	2'-7"	2'-0"	2'-4"	1'9"	2'-1"	1'-7"	2'-0"	1'-6"	1'-10"	1'-5"	1'-8"	1'-3"
#6	3'-7"	2'-9"	3'-11"	2'-4"	2'-9"	2'-1"	2'-6"	1'-11"	2'-4"	1'-10"	2'-2"	1'-8"	1'-11"	1'-6"
#7	5'-2"	4'-0"	4'-5"	3'-6"	4'-0"	3'-1"	3'-8"	2'-10"	3'-5"	2'-8"	3'-2"	2'-5"	2'-10"	2'-2"
#8	5'-11"	4'-7"	5'-2"	3'-11"	4'-7"	3'-6"	4'-2"	3'-3"	4'-0"	3'-1"	3'-8"	2'-10"	3'-3"	2'-6"
#9	6'-8"	5'-2"	5'-9"	4'-5"	5'-2"	4'-0"	4'-9"	3'-8"	4'-5"	3'-5"	4'-1"	3'-2"	3'-8"	2'-10"
#10	7'-6"	5'-10"	6'-6"	5'-0"	5'-10"	4'-6"	5'-4"	4'-1"	5'-0"	3'-10"	4'-7"	3'-7"	4'-2"	3'-2"
#11	8'-4"	6'-5"	7'-3"	5'-7"	6'-6"	5'-0"	5'-11"	4'-7"	5'-6"	4'-3"	5'-1"	3'-11"	4'-5"	3'-6"

NOTES:
1. TABULATED VALUES ARE APPLICABLE ONLY IF CLEAR SPACING OF BARS BEING DEVELOPED OR SPLICED IS NOT LESS THAN 'db', CLEAR COVER IS NOT LESS THAN 'db' AND STIRRUPS OR TIES THROUGHOUT 'ld' IS NOT LESS THAN CODE MINIMUM, OR CLEAR SPACING OF BARS BEING DEVELOPED OR SPLICED IS NOT LESS THAN 2" 'db' AND CLEAR COVER IS NOT LESS THAN 'db'. FOR OTHER CASES , MULTIPLY TABULATED VALUES BY 1.5.
2. 'TOP' BARS ARE HORIZONTAL REBARS WITH MORE THAN 12 IN OF FRESH CONCRETE CAST BELOW THE BARS AT THE DEVELOPMENT LENGTH.
3. FOR LIGHT WEIGHT CONCRETE MULTIPLY THE TABULATED VALUES BY 1.3.
4. FOR EPOXY COATED BARS, MULTIPLY THE TABULATED VALUES BY 1.5 FOR 'BOT' BARS, OR BY 1.3. FOR TOP BARS.
5. FOR REINFORCEMENT OTHER THAN GRADE 60, MODIFY THE TABULATED VALUES BY THE RATIO OF THE REINFORCEMENT YIELD STRENGTH DIVIDED BY 60 KSI.

TENSION LAP SPLICES-CLASS B- TOP & BOT BARS

BAR SIZE	f'c= 3000 PSI TOP	BOT	f'c= 4000 PSI TOP	BOT	f'c= 5000 PSI TOP	BOT	f'c= 6000 PSI TOP	BOT	f'c= 7000 PSI TOP	BOT	f'c= 8000 PSI TOP	BOT	f'c= 10000 PSI TOP	BOT
#3	2'-4"	1'-9"	2'-0"	1'-6"	1'-10"	1'-5"	1'-8"	1'-4"	1'-7"	1'-4"	1'-5"	1'-4"	1'-3"	1'-0"
#4	3'-1"	2'-4"	2'-8"	2'-1"	2'-5"	1'-10"	2'-2"	1'-8"	2'-1"	1'-7"	1'-11"	1'-5"	1'-8"	1'-7"
#5	3'-10"	3'-0"	3'-4"	2'-7"	3'-0"	2'-4"	2'-9"	2'-1"	2'-7"	2'-0"	2'-4"	1'-10"	2'-1"	1'-8"
#6	4'-8"	3'-7"	4'-0"	3'-1"	3'-7"	2'-9"	3'-3"	2'-8"	2'-11"	2'-4"	2'-10"	2'-2"	2'-6"	1'-11"
#7	6'-9"	5'-2"	5'-10"	4'-6"	5'-3"	4'-0"	4'-9"	3'-8"	4'-6"	3'-5"	4'-2"	3'-2"	3'-8"	2'-10"
#8	7'-9"	5'-11"	6'-8"	5'-2"	6'-0"	4'-7"	5'-5"	4'-2"	5'-1"	3'-11"	4'-9"	3'-8"	4'-3"	3'-3"
#9	8'-8"	6'-8"	7'-6"	5'-2"	6'-9"	5'-2"	6'-2"	4'-9"	5'-9"	4'-5"	5'-4"	4'-1"	4'-9"	3'-8"
#10	9'-10"	7'-6"	8'-6"	5'-9"	7'-7"	5'-10"	6'-11"	5'-4"	6'-6"	5'-0"	6'-0"	4'-7"	5'-4"	4'-2"
#11	10'-11"	8'-4"	9'-5"	7'-3"	8'-5"	6'-6"	7'-8"	5'-11"	7'-2"	5'-6"	6'-8"	5'-1"	5'-11"	4'-5"

NOTES:
1. TABULATED VALUES ARE APPLICABLE ONLY IF CLEAR SPACING OF BARS BEING DEVELOPED OR SPLICED IS NOT LESS THAN 'db', CLEAR COVER IS NOT LESS THAN 'db' AND STIRRUPS OR TIES THROUGHOUT 'ld' IS NOT LESS THAN CODE MINIMUM, OR CLEAR SPACING OF BARS BEING DEVELOPED OR SPLICED IS NOT LESS THAN 2" 'db' AND CLEAR COVER IS NOT LESS THAN 'db'. FOR OTHER CASES , MULTIPLY TABULATED VALUES BY 1.5.
2. 'TOP' BARS ARE HORIZONTAL REBARS WITH MORE THAN 12 IN OF FRESH CONCRETE CAST BELOW THE BARS AT THE DEVELOPMENT LENGTH.
3. FOR LIGHT WEIGHT CONCRETE MULTIPLY THE TABULATED VALUES BY 1.3.
4. FOR EPOXY COATED BARS, MULTIPLY THE TABULATED VALUES BY 1.5 FOR 'BOT' BARS, OR BY 1.3. FOR TOP BARS.
5. FOR REINFORCEMENT OTHER THAN GRADE 60, MODIFY THE TABULATED VALUES BY THE RATIO OF THE REINFORCEMENT YIELD STRENGTH DIVIDED BY 60 KSI.
6. FOR CLASS 'A' SPLICE USE SAME AS TENSION DEVELOPMENT LENGTH.

"Ldh" TENSION DEPELOPMENT (EMBEDMENT) LENGTH FOR STANDARD END HOOKS (GRADE 60 BARS - NORMAL WEIGHT CONCRETE - GENERAL USE)

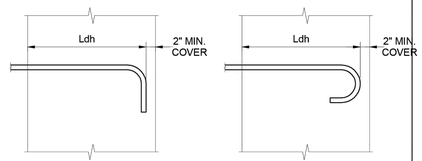

STANDARD 90 HOOK SIDE COVER > 21/2" — STANDARD 180 HOOK SIDE COVER > 21/2"

BAR SIZE	fc=3000 psi Ldh	fc=4000 psi Ldh	fc=5000 psi Ldh	fc=6000 psi Ldh
# 3	9"	7"	7"	6"
# 4	11"	10"	9"	8"
# 5	1'-2"	1'-0"	11"	10"
# 5	1'-5"	1'-3"	1'-1"	1'-0"
# 6	1'-7"	1'-5"	1'-3"	1'-2"
# 7	1'-10"	1'-7"	1'-5"	1'-4"
# 8	2'-1"	1'-10"	1'-7"	1'-6"
# 9	2'-4"	2'-0"	1'-10"	1'-8"
# 10	2'-8"	2'-2"	2'-0"	1'-10"

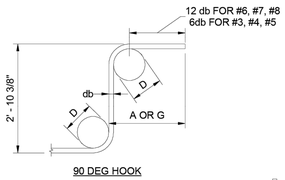

90 DEG HOOK

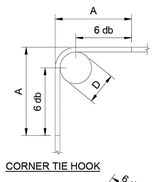

CORNER TIE HOOK

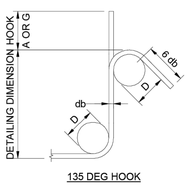

135 DEG HOOK

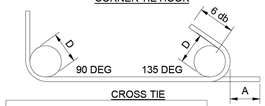

CROSS TIE

STIRRUP & TIE HOOK TYPES

BAR SIZE	D (IN.)	90 DEG HOOK A OR G (IN.)	135 DEG HOOK A OR G (IN.)
#3	1 1/2	4	4
#4	2	4 1/2	4 1/2
#5	2 1/2	6	5 1/2

APP. | DATE | REVISION | NO.

P.E. SEAL REQUIRED

PRELIMINARY

SUBJECT TO REVISION

This document is released for informational purposes under the authority of DAVID MOORE P.E. 139405 on 12/11/2025 It is not to be used for regulatory approval, permit, bidding, or construction purposes.

CONCEPT ENGINEERS
TX. FIRM REGISTRATION # F-04417
Structures for the whole community

IDS Engineering Group
13430 NW. Freeway
Suite 700
Houston, Tx. 77040
713.462.3178
TxEng Firm 2726
TxSurv Firm 10110700

CITY OF HOUSTON
HOUSTON PUBLIC WORKS

LIFT STATION RENEWAL AND REPLACEMENT FY 2023

GENERAL NOTES

WBS NUMBER	FOR CITY OF HOUSTON USE ONLY
R-000267-0179-4	
DRAWING SCALE	
AS NOTED	
CITY OF HOUSTON PM	
NAWARAJ PANTA, P.E.	
DWG. NO. WDF-S-02	SHEET NO. 242 OF 321

STRUCTURAL STEEL NOTES

1. ALL STRUCTURAL STEEL MEMBERS SHALL CONFORM TO THE FOLLOWING DESIGNATION

W SHAPES	ASTM A992		(50KSI)
SQUARE RECTANGULAR TUBES	ASTM A500	GR. C	(50 KSI)
ROUND TUBES (HSS)	ASTM A500	GR. C	(46 KSI)
STEEL PIPES	ASTM A53	GR. B	(35 KSI)
CHANNELS	ASTM A36		(36 KSI)
PLATES, ANGLES, MISC, STEEL	ASTM A36		(36 KSI)
ANCHOR RODS	ASTM F1554	GR.36	(36 KSI)
HARDENED STEEL WASHERS	ASTM F436		
HEAVY HEX NUTS	ASTM A563		
SEE NOTE 16			

2. ALL STRUCTURAL STEEL SHALL BE DETAILED FABRICATED AND ERECTED IN ACCORDANCE WITH A.I.S.C. STANDARDS 15th EDITION.

3. FOR ALL HIGH STRENGTH BOLTS, HARDENED WASHERS SHALL BE PROVIDED ON NUT SIDE OF BOLT FOR TORQUING AS REQUIRED.

4. ALL WELDING SHALL CONFORM TO STANDARD OF THE AMERICAN WELDING SOCIETY, AWS D1.1 LATEST EDITION STRUCTURAL WELDING CODE

5. E70 ELECTRODES FOR ALL FIELD AND SHOP WELDING SHALL CONFORM TO ANSI/AWS D1.1 LATEST EDITION UNLESS NOTED OTHERWISE ALL WELD SIZES SHALL BE PER AISC CODE. REFER TO NOTE 17 FOR ADDITIONAL INFORMATION.

6. SPLICING STRUCTURAL MEMBERS IS PROHIBITED WITHOUT PRIOR APPROVAL OF THE STRUCTURAL ENGINEER.

7. ANY TEMPORARY SHORING OR BRACING DURING THE CONSTRUCTION PHASE BEFORE COMPLETION OF CONNECTIONS IS THE RESPONSIBILITY OF THE CONTRACTOR.

8. IF NOT SHOWN ON THE DRAWINGS, SUPPORT OF METAL DECK AROUND COLUMN CLOSURE, SCREED PLATES AROUND THE OPENINGS AND EDGE OF SLAB SHALL BE PROVIDED BY THE CONTRACTOR.

9. ALL FIELD CONNECTIONS TO BOLTED WITH A325 BOLTS. BOLTS TO BE LEJEUNE TYPE OR EQUAL. PROVIDE MINIMUM OF TWO BOLTS PER CONNECTION, MINIMUM BOLT DIAMETER 3/4".

10. ALL EXPOSED STEEL SHALL BE HOT DIPPED GALVANIZED.

11. THE BEAM-TO-BEAM AND BEAM-TO-COLUMN SIMPLE SHEAR CONNECTIONS SHOULD DEVELOP THE END REACTION OF THE CONNECTED BEAM. THE END REACTION OF THE CONNECTED BEAM CAN BE OBTAINED FROM THE LOAD CARRYING CAPACITY OF THE BEAM ON THE BASIS OF EQUIVALENT UNIFORM LOADS GIVEN IN THE PART 3 OF AISC MANUAL LATEST EDITIONS (UNLESS LARGER REACTION IS SHOWN ON DRAWINGS). THE MINIMUM SHEARING CAPACITY OF 15 KIPS SHALL BE PROVIDED FOR ALL BEAMS. REFER TO NOTE 22 FOR COMPOSITE BEAM CONNECTION REQUIREMENTS.

12. THE DESIGN OF STRUCTURAL STEEL CONNECTIONS IS THE RESPONSIBILITY OF THE CONTRACTOR AND THE STEEL FABRICATOR. THE DESIGN OF STEEL CONNECTIONS SHALL BE PERFORMED BY A REGISTERED PROFESSIONAL ENGINEER, AND SHALL BE SUBMITTED TO THE ENGINEER OF RECORD FOR REVIEW.

13. STEEL BEAM BEARING ON MASONRY SHALL HAVE A MINIMUM OF 8" BEARING AND ANCHOR AS SHOWN ON THE DRAWINGS, MASONRY SHALL ALSO HAVE SOLID MASONRY OR FULLY GROUTED CELLS FROM STEEL BEARING TO GRADE BEAM BELOW.

14. UNLESS OTHERWISE NOTED, ALL MOMENT CONNECTIONS SHALL BE MADE WITH FULL PENETRATION WELD AND SHALL BE DESIGNED TO DEVELOP FULL CAPACITY OF THE MEMBER.

15. ANY MISCELLANEOUS STEEL NOT SHOWN ON THE PLANS, BUT REQUIRED DUE TO COORDINATION BETWEEN DIFFERENT DISCIPLINES SHALL BE INCLUDED BY THE CONTRACTOR IN THEIR BID.

16. CONNECTION MATERIALS
    a. BEAM, COLUMNS, STIFFENER PLATES AND DOUBLE PLATES TO MATCH GRADE STEEL OF STRUCTURAL ELEMENT
    b. ALL CONNECTION MATERIALS, EXCEPT AS OTHERWISE NOTED HEREIN OR IN THE DRAWINGS, INCLUDING BEARING PLATES, GUSSET PLATES, STIFFENER PLATES, ETC. ASTM A36

17. WELD MINIMUM SIZE & STRENGTH
    a. PROVIDE MINIMUM SIZE OF FILLET WELDS AS SPECIFIED IN TABLE J2,4 OF AISC MANUAL.
    b. PROVIDE MINIMUM EFFECTIVE THROAT THICKNESS OF PARTIAL PENETRATION GROOVE WELDS AS SPECIFIED ON TABLE J2.3 OF AISC MANUAL
    c. DEVELOP THE FULL TENSILE STRENGTH OF THE MEMBER ELEMENT JOIN ON ALL SHOP AND FIELD WELDS U.N.O.
    d. WHERE CONNECTIONS ARE NOTED ON DRAWINGS AS MOMENT CONNECTIONS PROVIDE WELDS TO DEVELOP FULL FLEXURAL CAPACITY OF THE LESSER MEMBER.

18. PROVIDE BOLTS, NUTS AND WASHERS THAT ARE HOT DIPPED GALVANIZED ACCORDING TO ASTM A153, CLASS C WHEN USED TO CONNECT STEEL ELEMENTS THAT ARE HOT DIP GALVANIZED AFTER FABRICATION.

19. FABRICATE AND ASSEMBLE STRUCTURAL MEMBERS/ASSEMBLIES IN SHOP TO GREATEST EXTEND POSSIBLE.

20. IF CAMBER OF STRUCTURAL MEMBERS IS INDICATED ON THE DRAWINGS WHERE POSSIBLE, CAMBER OF BEAMS TO BE APPLIED BY COLD BEND PROCESS, CAMBER INDICATED IN THE DRAWINGS ARE INTENDED TO BE FINAL CAMBER AT THE TIME OF ERECTION, AND WITHIN TOLERANCE O MINUS ZERO TO PLUS 1/8" FOR EACH TEM FEET OF MEMBER LENGTH. ALL BEAMS SHALL BE INSTALLED SO THAT NATURAL OF SPECIFIC CAMBER IS ORIENTED UPWARDS.

21. CONTRACTOR SHALL BE RESPONSIBLE FOR ALL ERRORS OF DETAILING ON THE SHOP DRAWINGS, ERRORS IN FABRICATION, AND THE CORRECT FITTING OF STRUCTURAL STEEL MEMBERS.

22. FIELD MODIFICATION TO STRUCTURAL STEEL IS PROHIBITED WITHOUT PRIOR APPROVAL BY THE E.O.R.

23. CLEAN STEEL OF RUST, LOSE MILL SCALE AND OTHER FOREIGN MATERIALS WHERE REQUIRED FOR FABRICATION, FITTING UP. OR WELDING.

24. DO NOT CUT STRUCTURAL STEEL MEMBERS FOR THE WORK OF OTHER TRADES WITHOUT PRIOR REVIEW AND APPROVAL OF THE E.O.R.

25. AFTER FABRICATION, HOT DIP GALVANIZE STRUCTURAL STEEL AND THEIR CONNECTIONS PERMANENTLY EXPOSED TO THE OUTSIDE, SUCH ITEMS INCLUDE BUT ARE NOT LIMITED TO:

    1. SHELF ANGLES
    2. PARAPET WALL SUPPORTING MEMBERS
    3, SCREEN WALL SUPPORTING MEMBERS
    4. EMBEDDED PLATES IN CONCRETE
    5. BUILDING CLADDING SUPPORT STEEL.

26. EXAMINE THE ARCHITECTURAL AND STRUCTURAL DRAWINGS FOR OTHER ITEMS THAT REQUIRE HOT DIPPED GALVANIZATION

27. PROVIDE NON-SHRINK NON-METALLIC GROUT FOR BASE PLATES WITH MINIMUM 28 DAYS COMPRESSIVE STRENGTH OF 6000 PSI COMPLETE GROUT WORK BEFORE ROOF CONCENTRATED POURING OF A SINGLE STORY BUILDING.

28. STRUCTURAL STEEL CONNECTIONS NOT COMPLETELY DETAILED ON THE DRAWINGS, INCLUDING MATERIAL GRADE & SIZES, WELD SIZES AND NUMBER OF BOLTS SHALL BE DESIGNED BY THE CONTRACTOR UNDER SUPERVISION OF REGISTERED PROFESSIONAL ENGINEER WHO IS REGISTERED ON THE STATE OF TEXAS AN EMPLOYED BY STEEL FABRICATOR, DESIGN CALCULATIONS TO BE SEALED BY FABRICATOR'S REGISTERED PROFESSIONAL ENGINEER, SHOP DRAWINGS SUBMITTED WITHOUT COMPLETE DESIGN CALCULATIONS WILL NOT BE REVIEWED. WHERE PREDESIGNED CONNECTIONS ARE TAKEN DIRECTLY FROM TABLES IN AISC MANUAL. CALCULATIONS NEED TO BE SUBMITTED PROVIDED JOB DESIGN CONDITIONS PRECISELY MATCH THOSE ASSUMED IN THE AISC MANUAL.

29. FURNISH SHOP DRAWINGS FOR E.O.R.'S REVIEW PRIOR TO FABRICATION. INCLUDE WELDING PROCEDURES, TESTING PROGRAMS FOR WELDING AND HIGH STRENGTH BOLTING, COATING MATERIAL, AND ERECTION SEQUENCE IN SHOP DRAWINGS.

30. MILL STEEL COLUMNS ENDS TO FIT FLUSH WITH BASE PLATE, AND END PLATES, FIELD ASSEMBLY OF THESE STEEL ELEMENTS TO THE COLUMNS IS PROHIBITED.

31. PROVIDE HEADED STUDS (SHEAR AND ANCHOR) MADE OF MATERIAL CONFORMING TO AWS D1.1 CLAUSE 9.2.6.

32. PROVIDE DEFORMED ANCHORS MADE OF MATERIAL CONFORMING TO ASTM A1064.

33. WELD STUDS ACCORDING TO MANUFACTURER'S RECOMMENDATIONS. MANUAL ARC (STICK) WELDING OF HEADED STUDS AND/OR DEFORMED ANCHORS IS NOT ALLOWED.

34. PRIOR TO DECK PLACEMENT, VERIFY THAT STEEL BEAMS BEARING ON MASONRY HAVE 6" MINIMUM BEARING AND ARE ANCHORED S SHOWN ON DRAWINGS.

EXISTING CONSTRUCTION NOTES

1. BEFORE PROCEEDING WITH ANY WORK WITHIN THE EXISTING FACILITY, THE CONTRACTOR SHALL FAMILIARIZE HIMSELF WITH EXISTING STRUCTURAL AND OTHER CONDITIONS. IT SHALL BE THE CONTRACTOR'S RESPONSIBILITY TO PROVIDE ALL NECESSARY BRACING, SHORING, AND OTHER SAFEGUARDS TO MAINTAIN ALL PARTS OF THE EXISTING WORK IN A SAFE CONDITION DURING THE PROCESS OF CONSTRUCTION, AND TO PROTECT FROM DAMAGE THOSE PORTIONS OF THE EXISTING WORK WHICH ARE TO REMAIN.

2. THE CONTRACTOR SHALL FIELD VERIFY THE DIMENSIONS, ELEVATIONS, ETC. NECESSARY FOR THE PROPER CONSTRUCTION AND ALIGNMENT OF THE NEW PORTIONS OF THE WORK TO THE EXISTING WORK. THE CONTRACTOR SHALL MAKE ALL MEASUREMENTS NECESSARY FOR FABRICATION AND ERECTION OF STRUCTURAL MEMBERS. ANY DISCREPANCY SHALL BE IMMEDIATELY BROUGHT TO THE ATTENTION OF THE ENGINEER.

3. WELDING TO AND WITHIN AN EXISTING FACILITY PRESENTS POTENTIAL HAZARDS, INCLUDING:
    A. FIRE HAZARD DUE TO THE EXISTING CONSTRUCTION AND BUILDING CONTENTS.
    B. STRUCTURAL LIQUEFACTION DUE TO WELDING ACROSS THE FULL SECTION OF STRUCTURAL MEMBERS.
    RECOMMENDATIONS TO PREVENT THESE HAZARDS INCLUDE:
    A. PROTECT EXISTING COMBUSTIBLES PRIOR TO WELDING. KEEP A SEPARATE WATCHMAN AND SEVERAL FIRE EXTINGUISHERS ON HAND
    B. WELD IN SMALL INCREMENTS. ALLOW WELDS TO HARDEN BEFORE CONTINUING TO THE NEXT INCREMENT.
    C. DO NOT LEAVE THE SITE UNTIL SATISFIED THAT NO FIRE HAZARD EXISTS.

4. THE CONTRACTOR SHALL BE RESPONSIBLE FOR THE DESIGN AND ERECTION OF ALL SHORING NECESSARY TO SAFEGUARD THE EXISTING STRUCTURE. THE CONTRACTOR SHALL SUBMIT A DETAILED PLAN FOR SHORING, BRACING, AND PROTECTION OF THE EXISTING CONSTRUCTION.

DEMOLITION NOTES

1. PERFORM DEMOLITION IN A CAREFUL AND CONTROLLED MANNER TO PREVENT DAMAGE TO EXISTING STRUCTURES , UTILITES AND IMPROVEMENTS TO REMAIN.

2. CONTRACTOR SHALL BE SOLEY RESPONSIBLE FOR ALL MEANS, METHODS, SEQUENCES . PROCEDURES, AND SAFETY PRECAUTIONS ASSOCIATED WITH DEMOLITION. ENGINEER'S DRAWINGS INDICATE LIMITS OF DEMOLITION ONLY AND DO NOT PRESCRIBE HOW DEMOLITION IS TO BE PERFORMED.

3. VERIFY FIELD CONDITIONS PRIOR TO STARTING WORK. PROVIDE ALL NECESSARY BRACING, SHORING, AND TEMPORARY SUPPORTS TO PREVENT MOVEMENT OR DAMAGE TO ADJACENT OR REMAINING STRUCTURES.

4. IMMEDIATELY CEASE OPERATIONS AND NOTIFY OWNER AND ENGINEER IF MOVEMENT, SETTLEMENT, OR UNSAFE CONDITIONS ARE OBSERVED DO NOT RESUME WORK UNTIL SAFETY HAS BEEN RESTORED.

5. REMOVE ONLY PORTIONS OF CONSTRUCTION INDICATED ON THE DRAWINGS. WHERE LIMITS ARE UNCLEAR, CONFIRM EXTENT OF REMOVAL WITH ENGINEER PRIOR TO PROCEEDING.

6. PERFORM ALL WORK IN ACCORDANCE WITH LOCAL, STATE AND FEDERAL REGULATIONS INCLUDING OSHA REQUIREMENTS. MAINTAIN SAFE ACCESS AND CONTROL DUST, DEBRIS, AND NOISE AT ALL TIMES.

7. REPAIR OR REPLACE, AT NO COST TO THE OWNER, ANY DAMAGE RESULTING FROM DEMOLITION OPERATIONS OR DEMOLITION PERFORMED BEYOND THE LIMITS INDICATED.

8. ENGINEER'S RESPONSIBILITY IS LIMITED TO DEFINING THE EXTENT OF DEMOLITION. CONTRACTOR SHALL BE FULLY RESPONSIBLE FOR MEANS, METHODS SAFETY AND PRTECTION OF EXISTING STRUCTURES AND FACILITIES.

STRUCTURAL ABBREVIATIONS

AB	ANCHOR BOLT	FLR	FLOOR	PERP	PERPENDICULAR
ALT	ALTERNATIVE	FOM	FACE OF MASONRY	PL	PLATE
ALUM	ALUMINUM	FS	FAR SIDE	PLUMB	PLUMBING
ARCH	ARCHITECTURAL	FT	FOOT	PNL	PANEL
B	BOTTOM	FTG	FOOTING	POLY	POLYETHYLENE
B/	BOTTOM OF	FUT	FUTURE	PREFAB	PREFABRICATED
BLDG	BUILDING	GA	GAGE	PSF	POUNS PER SQUARE FOOT
BM	BEAM	GALV	GALVANIZED	PSI	POUNS PER SQUARE INCH
B/BOT	BOTTOM	GYP	GYPSUM	QTY	QUANTITY
BRG	BEARING	HORIZ	HORIZONTAL	R	RADIUS
C	CHANNEL SHAPE	HP	HIGH POINT	RE	CALLED RIGHT END
C TO C	CENTER TO CENTER	HSS	HOLLOW STRUCTURAL SECTION	RE:	REFERENCE
CANT	CANTILIVER	HT	HEIGHT	REINF	REINFORCE (MENT) (D)
CJ	CONTROL JOINT	IN	INCH	REQ	REQUIRE
CONST JT	CONSTRUCTION JOINT	INFO	INFORMATION	REQD	REQUIRED
CL	CENTER LINE	INT	INTERIOR	REV	REVISION
CLR	CLEAR	INSUL	INSULATION	SCHED	SCHEDULE
CMU	CONCRETE MASONRY UNIT	JB	JOIST BOTTOM / SEAT ELEVATION	SF	SQUARE FOOT
COL	COLUMN	JST	JOIST	SHT	SHEET
CONC	CONCRETE	JT	JOINT	SI	SQUARE INCH
CONN	CONNECTION	K	KIPS	SIM	SIMILAR
CONST	CONSTRUCTION	KO	KNOCK OUT	SL	SLOPE
CONT	CONTINUOUS	KSF	KIPS PER SQUARE FOOT	SOG	SLAB ON GRADE
COORD	COORDINATE	KSI	KIPS PER SQUARE INCH	SPA	SPACES (D)
CTR	CENTER	L	ANGLE	SPEC	SPECIFICATION
CTRD	CENTERED	LB	POUND	STD	STANDARD
D	DEPTH	LE	LEFT END	STIFF	STIFFENER
DBA	DEFORMED ANCHOR BAR	LG	LONG	STL	STEEL
DBL	DOUBLE	LLH	LONG LEG HORIZONTAL	SW	SHORTWAY
DBL TEE	PRECAST DOUBLE TEE	LLV	LONG LEG VERTICAL	SYM	SYMETRICAL
DIA	DIAMETER	LSH	LONG SIDE HORIZONTAL	T	TOP
DIAG	DIAGONAL	LSV	LONG SIDE VERTICAL	T/	TOP OF
DIM	DIMENSION	LP	LOW POINT	T&B	TOP AND BOTTOM
DN	DOWN	LW	LONG WAY	THK	THICK
DTL	DETAIL	M	MIDDLE	TOF	TOP OF FOOTING
DWG	DRAWING	MANUF/MFR	MANUFACTER	TOJ	TOP OF JOIST
DWL	DOWEL	MATL	MATERIAL	TOS	TOP OF STEEL
EA	EACH	MAX	MAXIMUM	TRANSV	TRANSVERSE
EE	EACH END	MECH	MECHANICAL	TYP.	TYPICAL
EF	EACH FACE	MEP	MECHANICAL/ELECTRICAL/ PLUMBING	UON	UNLESS OTHERWISE NOTED
EJ	EXPANSION JOINT			VERT	VERTICAL
EL/ELEV	ELEVATION	MEZZ	MEZZANINE	WF	WIDE FLANGE SHAPE
EOR	ENGINEER OF RECORD	MIN	MINIMUM	W/	WITH
EOS	EDGE OF SLAB	MISC	MISCELLANEOUS	W/O	WITHOUT
EQ	EQUAL	MO	MASONRY OPENING	WP	WORK POINT
EQUIP	EQUIPMENT	MSL	MEAN SEA LEVEL	WS	WATERSTOP
ES	EACH SIDE	MTL	METAL	WT	T SHAPE
EW	EACH WAY	NO	NUMBER	WWF	WELDED WIRE FABRIC
EXIST	EXISTING	NS	NEAR SIDE	&	AND
EXP	EXPANSION	N.T.S.	NOT TO SCALE	@	AT
EXT	EXTERIOR	OC	ON CENTER	Ø	DIAMETER
FD	FLOOR DRAIN	OC EW	ON CENTER EACH WAY	#	NUMBER
FDN	FOUNDATION	OPNG	OPENING	±	PLUS/MINUS
FL	FULL LENGTH	OPP	OPPOSITE		
FF	FINISH FLR	PEMB	PREENGINEERRED METAL BUILDING		

NO.	DATE	REVISION	APP.

P.E. SEAL REQUIRED

PRELIMINARY

SUBJECT TO REVISION

This document is released for informational purposes under the authority of DAVID MOORE P.E. 139405 on 12/11/2025 It is not to be used for regulatory approval, permit, bidding, or construction purposes.

CONCEPT ENGINEERS

TX. FIRM REGISTRATION # F-04417

Structures for the whole community

IDS Engineering Group

13430 NW. Freeway
Suite 700
Houston, Tx. 77040
713.462.3178

TxEng Firm 2726
TxSurv Firm 10110700

CITY OF HOUSTON

HOUSTON PUBLIC WORKS

LIFT STATION RENEWAL AND REPLACEMENT FY 2023

GENERAL NOTES

WBS NUMBER	FOR CITY OF HOUSTON USE ONLY
R-000267-0179-4	
DRAWING SCALE	
AS NOTED	
CITY OF HOUSTON PM	
NAWARAJ PANTA, P.E.	
DWG. NO. WDF-S-03	SHEET NO. 243 OF 321

SPECIAL INSPECTIONS NOTES

THE FOLLOWING STATEMENT AND SCHEDULES OF INSPECTIONS OUTLINE THE SPECIAL INSPECTIONS AND TESTS NECESSARY FOR THIS PROJECT.
THE GENERAL CONTRACTOR SHALL HIRE AN "APPROVED AGENCY" PER THE INTERNATIONAL BUILDING CODE (IBC) SECTION 1703 TO PROVIDE SPECIAL INSPECTIONS FOR THIS PROJECT. THE QUALIFIED SPECIAL INSPECTOR SHALL REFERENCE THESE PLANS AND CHAPTER 17 OF THE IBC FOR ALL SPECIAL INSPECTION REQUIREMENTS. SPECIAL INSPECTION REPORTS SHOULD BE SUBMITTED WEEKLY.
THE APPROVED AGENCY SHALL SUBMIT COPIES OF ALL INSPECTION REPORTS TO THE ARCHITECT/ENGINEER AND THE AUTHORITY HAVING JURISDICTION (BUILDING OFFICIAL) FOR REVIEW. THE SPECIAL INSPECTION SHALL BRING DISCREPANCIES TO THE IMMEDIATE ATTENTION OF THE GENERAL CONTRACTOR FOR CORRECTION. IF THE DISCREPANCIES ARE NOT CORRECTED, THE DISCREPANCIES SHALL BE BROUGHT TO THE ATTENTION OF THE BUILDING OFFICIAL AND TO THE ARCHITECT PRIOR TO THE COMPLETION OF THAT PHASE OF THE WORK. IN ADDITION TO SPECIAL INSPECTION REPORTS AND TESTS, SUBMIT REPORTS AND CERTIFICATES NOTED IN IBC 1704.5 TO THE AUTHORITY HAVING JURISDICTION. FINAL REPORTS DOCUMENTING SPECIAL INSPECTIONS AND TESTS MUST BE SUBMITTED TO THE BUILDING OFFICIAL PER IBC 1704.2.4.

STATEMENT OF SPECIAL INSPECTIONS:

THIS SPECIAL INSPECTIONS STATEMENT HAS BEEN PREPARED WITH THE UNDERSTANDING THAT SEOR AND THE BUILDING OFFICIAL REPRESENTATIVE WILL:

- REVIEW AND ACCEPT THE QUALIFICATIONS OF THE SPECIAL INSPECTORS
- OBSERVE THE SPECIAL INSPECTION OPERATIONS TAKING PLACE AT THE PROJECT SITE TO ENSURE THAT THE SPECIAL INSPECTORS ARE COMPETENT AND CARRYING OUT THEIR ASSIGNED RESPONSIBILITIES AS SPECIFIED IN THIS STATEMENT.
- REVIEW ALL THE SPECIAL INSPECTION REPORTS THAT THE SPECIAL INSPECTOR HAS PROVIDED THEM WITH.
- CONDUCT INSPECTIONS AS SPECIFIED BY IBC SECTION 110.3

THE FOLLOWING SPECIAL INSPECTIONS APPLY TO THIS PROJECT:

- SPECIAL INSPECTIONS FOR STANDARD BUILDINGS PER IBC 1705.1 [REQUIRED]
- STORM SHELTER INSPECTIONS SHALL MATCH THE REQUIREMENTS OF THE HOST BUILDING PER SECTION 106 OF 2020 ICC-500. [REQUIRED]

SPECIAL INSPECTION OF SHOP-FABRICATED GRAVITY LOAD-BEARING MEMBERS AND ASSEMBLIES:

SPECIAL INSPECTION OF SHOP-FABRICATED GRAVITY LOAD BEARING MEMBERS & ASSEMBLIES SHALL BE PERFORMED BY THE SPECIAL INSPECTOR AS STATED IN SECTION 1704.2.5, WHICH INCLUDES THE FOLLOWING:

- BEFORE FABRICATION BEGINS, SPECIAL INSPECTORS REPRESENTING THE GENERAL CONTRACTOR NEED TO VISIT THE FABRICATOR'S SHOP TO VERIFY THAT THE FABRICATOR HAS DETAILED FABRICATION AND QUALITY CONTROL (QC) PROCEDURES IN PLACE. THESE PROCEDURES SHOULD COVER INSPECTION, WORKMANSHIP CONTROL, MATERIAL CONTROL, AND THE FABRICATOR'S ABILITY TO ADHERE TO THE APPROVED CONSTRUCTION DOCUMENTS AND REFERENCED STANDARDS.
- THE FABRICATOR MUST HAVE DETAILED PROCEDURES FOR MATERIAL CONTROL AVAILABLE FOR THE INSPECTOR TO REVIEW. THESE PROCEDURES SHOULD SHOW THAT THE FABRICATOR CAN MAINTAIN ACCURATE RECORDS AND PROCESSES SO THAT AT ANY POINT DURING FABRICATION, THE MATERIAL SPECIFICATION, GRADE, AND RELEVANT TEST REPORTS FOR PRIMARY LOAD-CARRYING MEMBERS CAN BE IDENTIFIED.

SPECIAL INSPECTION OF STRUCTURAL STEEL:

AS PER IBC SECTION 1705.2.1, A QUALIFIED SPECIAL INSPECTOR OF AN "APPROVED AGENCY" PROVIDING QUALITY ASSURANCE (QA) SPECIAL INSPECTIONS FOR THE PROJECT SHALL REVIEW AND CONFIRM THE FABRICATOR AND ERECTOR'S QUALITY CONTROL (QC) PROCEDURES FOR COMPLETENESS AND ADEQUACY RELATIVE TO AISC 360-16 CHAPTER N, AISC 303-16 CODE OF STANDARD AND PRACTICE, AWS D1.1-2015 STRUCTURAL WELDING CODE, AND 2018 IBC CODE REQUIREMENTS FOR THE FABRICATOR'S SCOPE OF WORK.

- QA AGENCY PROVIDING SPECIAL INSPECTIONS MUST EMPLOY PERSONNEL WHO MEET THE MINIMUM QUALIFICATION REQUIREMENTS FOR INSPECTION AND NONDESTRUCTIVE TESTING (NDT) AS PER AISC 360 SECTION N4.
- ENSURE THE FABRICATOR AND ERECTOR QUALITY CONTROL (QC) PROGRAM COMPLIES WITH AISC 360 SECTION N2.
- QC AND QA PERSONNEL SHALL INSPECT WELDS AND BOLTS PER THE SCHEDULE OF SPECIAL INSPECTIONS BELOW.
- ALL AWS D1.1 STRUCTURAL WELDING CODE PROVISIONS FOR STATICALLY LOADED STRUCTURES SHALL APPLY.
- NONDESTRUCTIVE TESTING (NDT) OF WELDS:
  - NON-DESTRUCTIVE TESTING (NDT) OF WELDED JOINTS PER AISC 360 N5.5
  - RISK CATEGORY FOR DETERMINATION OF THE EXTENT OF NDT PER AISC 360 N5.5B IS NOTED IN THE DESIGN CRITERIA AND LOADS SECTION OF THESE GENERAL REQUIREMENTS. NDT MUST BE DOCUMENTED, AND REPORTS SHOULD SPECIFY THE TESTED WELD BY PIECE MARK AND LOCATION.
- ADDITIONAL INSPECTION TASKS PER AISC 360 SECTION N5.8.

POST-INSTALLED ANCHORS TO CONCRETE AND MASONRY: SHALL COMPLY WITH IBC SECTION 1703. INSPECTIONS MUST COMPLY WITH THE REQUIREMENTS IN THE APPROVED ICC EVALUATION REPORT AND THE DESIGN REQUIREMENTS SPECIFIED ON THE DRAWINGS. REFER TO THE POST INSTALLED ANCHORS SECTION OF THESE NOTES FOR ANCHORS THAT ARE THE BASIS OF THE DESIGN. THE SPECIAL INSPECTOR MUST ENSURE THAT THE ANCHORS ARE IN ACCORDANCE WITH THE POST-INSTALLED ANCHORS SECTION OF THESE NOTES OR AS SPECIFICALLY INDICATED ON THE DRAWINGS. SUBSTITUTIONS MUST BE APPROVED BY THE SER AND REQUIRE SUPPORTING CALCULATIONS AND THE CURRENT 2018 IBC-RECOGNIZED ICC EVALUATION SERVICES (ES) REPORT. SPECIAL INSPECTORS MUST DOCUMENT COMPLIANCE WITH ALL ELEMENTS REQUIRED IN THE RELEVANT ICC EVALUATION SERVICES (ES) REPORT IN THEIR SPECIAL INSPECTION REPORT.

PREFABRICATED CONSTRUCTION: ALL PREFABRICATED CONSTRUCTION SHALL CONFORM TO IBC SECTION 1703.

PER THE ICC-500, SECTION 111.1 STRUCTURAL OBSERVATION :

DURING CONSTRUCTION OF THE STORM SHELTER, THE BUILDING OWNER SHALL EMPLOY A REGISTERED DESIGN PROFESSIONAL TO CONDUCT VISUAL OBSERVATIONS OF THE CONSTRUCTION OF THE STRUCTURAL SYSTEM FOR GENERAL CONFORMANCE TO THE APPROVED CONSTRUCTION DOCUMENTS AT SIGNIFICANT CONSTRUCTION STAGES AND AT COMPLETION OF THE CONSTRUTION OF THE STRUCTURAL SYSTEM.

STRUCTURAL OBSERVATION SHALL NOT OBVIATE THE NEED FOR OTHER INSPECTIONS OR TESTING REQUIRED BY THIS STANDARD OR APPLICABLE CODE.

DEFICIENCIES SHALL BE REPORTED IN WRITING TO THE ATHORITY HAVING JURISDICTION AND OWNER OR THE OWNER'S AUTHORIZED AGENT. AT THE CONCLUSION OF THE WORK, THE REGISTERED DESIGN PROFESSIONAL WHO MADE THE STRUCTURAL OBSERVATIONS SHALL SUBMIT TO THE AUTHORITY HAVING JURISDICTION A WRITTEN STATEMENT THAT THE SITE VISITS HAVE BEEN MADE AND SHALL IDENTIFY ANY REPORTED DEFICIENCIES THAT, TO THE BEST OF THE STRUCTURAL OBSERVER'S KNOWLEDGE, HAVE NOT BEEN RESOLVED.

SECTION 110
SPECIAL INSPECTIONS

110.1 SPECIAL INSPECTIONS

SPECIAL INSPECTION SHALL BE PROVIDED IN ACCORDANCE SITH THIS SECTION, IN ADDITION TO THOSE REQUIRED BY THE *AUTHORITY HAVING JURISDICTION* IN ACCORDANCE WITH THE *APPLICABLE CODE*. ONE STATEMENT OF *SPECIAL INSPECTIONS* SHALL BE PERMITTED TO APPLY TO BOTH *HOST BUILDING* AND *STORM SHELTER* CONSTRUCTION.

EXCEPTION: PREFABRICATED OR PANELIZED *STORM SHELTER* COMPONENTS THAT HAVE BEEN INSPECTED AND *LABELED* BY AN *APPROVED AGENCY* MEETING THE REQUIREMENTS OF THE *APLICABLE CODE*.

110.1.2 SPECIAL CASES

SPECIAL INSPECTIONS SHALL BE PROVIDED FOR PROPOSED WORK COMPRISED OF THE FOLLOWING:

1. CONSTRUCTION MATERIALS AND SYSTEMS THAT ARE ALTERNATIVES TO TRADITIONAL MATERIALS AND SYSTEMS PRESCRIBED BY THE *APPLICABLE CODE*.
2. UNUSUAL DESIGN AND CONSTRUCTION APPLICATIONS.
3. ANCHORS POS-INSTALLED IN HARDENED CONCRETE AND MASONRY, WHERE USED FOR ANCHORAGE OF *STORM SHELTER* COMPONENTS FORMING A PART OF THE *STORM SHELTER* ENCLOSURE OR FOR ANCHORAGE OF THE *STORM SHELTER* STRUCTURE TO FOUNDATIONS SHALL BE IN ACCORDANCE WITH SECTION 110.1.2.1.

110.1.2.1 SPECIAL INSPECTIONS TO VERIFY ANCHOR INSTALLATION

A *SPECIAL INSPECTION* SHALL BE PROVIDED TO VERIFY THE POS-INSTALLED ANCHOR INSTALLATION AND CAPACITY IN ACCORDANCE WITH SECTION 106.2.1. FOR POST-INSTALLED ANCHORAGE TO FOUNDATIONS, *SPECIAL INSPECTION* SHALL BE PROVIDED TO VERIFY FOUNDATION ADEQUACY IN ACCORDANCE WITH SECTIONS 106.2.1 AND 307.

TABLE 1705.3
REQUIRED SPECIAL INSPECTIONS AND TESTS OF CONCRETE CONSTRUCTION

TYPE	CONTINUOUS SPECIAL INSPECTION	PERIODIC SPECIAL INSPECTION	REFERENCED STANDARD[a]	IBC REFERENCE
1. INSPECT REINFORCEMENT, INCLUDING RESTRESSING TENDONS, AND VERIFY PLACEMENT.	-	X	ACI 318: CH. 20, 25.2, 25.3, 26.6.1-26.6.3	-
2. REINFORCING BAR WELDING:				-
a. VERIFY WELDABILITY OF REINFORCING BARS OTHER THAN ASTM A706;			AWS D1.4	
b. INSPECT SINGLE-PASS FILLET WELDS, MAXIMUM 5/16"; AND	-	X	ACI 318: 26.6.4	
c. INSPECT ALL OTHER WELDS.	X	X		
3. INSPECT ANCHORS CAST IN CONCRETE.	-	X	ACI 318: 17.8.2	-
4. INSPECT ANCHORS POST-INSTALLED IN HARDENED CONCRETE MEMBERS.[B]				-
a. ADHESIVE ANCHORS INSTALLED IN HORIZONTALLY OR UPWARDLY INCLINED ORIENTATIONS TO RESIST SUSTAINED TENSION LOADS.	X	X	ACI 318: 17.8.2.4	
b. MECHANICAL ANCHORS AND ADHESIVE ANCHORS NOT DEFINED IN 4.A.			ACI 318: 17.8.2	
5. VERIFY USE OF REQUIRED DESIGN MIX.	-	X	ACI 318: CH. 19, 26.4.3, 26.4.4	-
6. PRIOR TO CONCRETE PLACEMENT, FABRICATE SPECIMENS FOR STRENGTH TESTS, PERFORM SLUMP AND AIR CONTENT TESTS, AND DETERMINE THE TEMPERATURE OF THE CONCRETE.	X		ASTM C31 ASTM C172 ACI 318: 26.5, 26.12	-
7. INSPECT CONCRETE AND SHOTCRETE PLACEMENT FOR PROPER APPLICATION TECHNIQUES.	X		ACI 318: 26.5	-
8. VERIFY MAINTENANCE OF SPECIFIED CURING TEMPERATURE AND TECHNIQUES.	-	X	ACI 318: 26.10	-
9. INSPECT PRESTRESSED CONCRETE FOR: A. APPLICATION OF PRESTRESSING FORCES; AND B. GROUTING OF BONDED PRESTRESSING TENDONS.	X X		ACI 318: CH. 20, 25.2, 25.3, 26.6.1-26.6.3	-
10. INSPECT ERECTION OF PRECAST CONCRETE MEMBERS.	-	X	ACI 318: 26.9	-
11. FOR PRECAST CONCRETE DIAPHRAGM CONNECTIONS OR REINFORCEMENT AT JOINTS CLASSIFIED AS MODERATE OR HIGH DEFORMABILITY ELEMENTS (MDE OR HDE) IN STRUCTURES ASSIGNED TO SEISMIC DESIGN CATEGORY C, D, E OR F, INSPECT SUCH CONNECTIONS AND REINFORCEMENT IN THE FIELD FOR:			ACI 318: 26.13.1.3	-
a. INSTALLATION OF THE EMBEDDED PARTS	X			
b. COMPLETION OF THE CONTINUITY OF REINFORCEMENT ACROSS JOINTS.	X		ACI 550.5	
c. COMPLETION OF CONNECTIONS IN THE FIELD.	X			
12. INSPECT INSTALLATION TOLERANCES OF PRECAST CONCRETE DIAPHRAGM CONNECTIONS FOR COMPLIANCE WITH ACI 550.5.	-	X	ACI 318: 26.13.1.3	-
13. VERIFY IN-SITU CONCRETE STRENGTH, PRIOR TO STRESSING OF TENDONS IN POST-TENSIONED CONCRETE AND PRIOR TO REMOVAL OF SHORES AND FORMS FROM BEAMS AND STRUCTURAL SLABS.	-	X	ACI 318: 26.11.2	-
14. INSPECT FORMWORK FOR SHAPE, LOCATION AND DIMENSIONS OF THE CONCRETE MEMBER BEING FORMED.	-	X	ACI 318: 26.11.1.2(b)	-

SCHEDULES OF SPECIAL INSPECTIONS:

TABLE 1705.6
REQUIRED SPECIAL INSPECTIONS AND TESTS OF SOILS

TYPE	CONTINUOUS SPECIAL INSPECTION	PERIODIC SPECIAL IN- SPECTION
1. VERIFY MATERIALS BELOW SHALLOW FOUNDATIONS ARE ADEQUATE TO ACHIEVE THE DESIGN BEARING CAPACITY.	-	X
2. VERIFY EXCAVATIONS ARE EXTENDED TO PROPER DEPTH AND HAVE REACHED PROPER MATERIAL.	-	X
3. PERFORM CLASSIFICATION AND TESTING OF COMPACTED FILL MATERIALS.	-	X
4. VERIFY USE OF PROPER MATERIALS, DENSITIES AND LIFT THICKNESSES DURING PLACEMENT AND COMPACTION OF COMPACTED FILL.	X	-
5. PRIOR TO PLACEMENT OF COMPACTED FILL, INSPECT SUBGRADE AND VERIFY THAT SITE HAS BEEN PREPARED PROPERLY.	-	X

TABLE 1705.2.3
REQUIRED SPECIAL INSPECTIONS OF OPEN-WEB STEEL JOISTS AND JOIST GIRDERS

TYPE	CONTINUOUS SPECIAL INSPECTION	PERIODIC SPECIAL INSPECTION	REFERENCED STANDARD[a]
1. INSTALLATION OF OPEN-WEB STEEL JOISTS AND JOIST GIRDERS.			
a. END CONNECTIONS – WELDING OR BOLTED.	-	X	SJI SPECIFICATIONS LISTED IN SECTION 2207.1.
b. BRIDGING – HORIZONTAL OR DIAGONAL.	-	X	-
1. STANDARD BRIDGING.	X	X	SJI SPECIFICATIONS LISTED IN SECTION 2207.1.
2. BRIDGING THAT DIFFERS FROM THE SJI SPECIFICATIONS LISTED IN SECTION 2207.1.	-	X	-

MINIMUM REQUIREMENTS FOR INSPECTIONS OF STRUCTURAL STEEL CONSTRUCTION

INSPECTION TASKS	QC	QA	REFERENCED STANDARD
INSPECTION TASKS PRIOR TO WELDING			
1. Welder qualification records and continuity records	P	O	AISC 360 TABLE N5.4-1
2. Welding procedure specifications (WPSs) available	P	O	AISC 360 TABLE N5.4-1
3. Manufacturing certifications for welding consumables available	P	O	AISC 360 TABLE N5.4-1
4. Material identification (type/grade)	P	O	AISC 360 TABLE N5.4-1
5. Welder Identification system	P	O	AISC 360 TABLE N5.4-1
8. Configuration and finish of access holes	P	O	AISC 360 TABLE N5.4-1
9. Fit-up of fillet welds • Dimensions (alignment gaps at root) • Cleanliness (condition of steel surfaces) • Tacking (tack weld quality and location)	P	O	AISC 360 TABLE N5.4-1
10. Check welding equipment	P	O	AISC 360 TABLE N5.4-1
INSPECTION TASKS DURING WELDING			
1. Use of qualified welders	P	O	AISC 360 TABLE N5.4-2
2. Control and handling of welding consumables • Packaging • Exposure Control	P	O	AISC 360 TABLE N5.4-2
3. No welding over cracked track welds	P	O	AISC 360 TABLE N5.4-2
4. Environmental conditions • Wind speed within limits • Precipitation and temperature	P	O	AISC 360 TABLE N5.4-2
5. WPS followed • Settings on welding equipment • Travel speed • Selected welding materials • Shielding gas type/flowrate • Preheat applied • Interpass temperature maintained (min/max) • Proper position (F,V,H,OH)	P	O	AISC 360 TABLE N5.4-2
6. Welding techniques • Interpass and final cleaning • Each pass within profile limitations • Each pass meets quality requirements	P	O	AISC 360 TABLE N5.4-2
INSPECTION TASKS AFTER WELDING			
1. Welds cleaned	P	O	AISC 360 TABLE N5.4-3
2. Size, length, and locations of welds	P	O	AISC 360 TABLE N5.4-3
3. Welds meet visual acceptance criteria • Crack prohibition • Weld/base-metal fusion • Crater cross section • Weld profiles • Weld size • Undercut • Porosity	P	O	AISC 360 TABLE N5.4-3
4. Arc strikes	P	O	AISC 360 TABLE N5.4-3
5. k-area	P	O	AISC 360 TABLE N5.4-3
6. Weld access holes in roled heavy shapes and built-up heavy shapes	P	O	AISC 360 TABLE N5.4-3
7. Backing removed and weld tabs removed (if required)	P	O	AISC 360 TABLE N5.4-3
8. Repair activities	P	O	AISC 360 TABLE N5.4-3
9. Document acceptance or rejection of welded joint or member	P	O	AISC 360 TABLE N5.4-3
10. No prohibited welds have been added without the approval of the EOR	P	O	AISC 360 TABLE N5.4-3
INSPECTION TASKS PRIOR TO BOLTING			
1.Manufacturer's certifications available for fastener materials	P	O	AISC 360 TABLE N5.6-1
2.Fasteners marked in accordance with ASTM requirements	P	O	AISC 360 TABLE N5.6-1
3.Correct fasteners selected for the joint detail (grade, type, bolt length if threads are to be excluded from shear plane)	P	O	AISC 360 TABLE N5.6-1
4.Correct bolting procedures selected for joint detail	P	O	AISC 360 TABLE N5.6-1
5.Connecting elements, including the appropriate faying surface condition and hole preparation, if specified, meet applicable requirements.	P	O	AISC 360 TABLE N5.6-1
6.Pre-installation verification testing by installation personnel observed and documented for fastener assemblies and methods used	P	O	AISC 360 TABLE N5.6-1
7.Proper storage provided for bolts, nuts, washers and other fasteners components	P	O	AISC 360 TABLE N5.6-1
INSPECTION TASKS DURING BOLTING			
1. Fastener assemblies, of suitable condition, placed in all holes and washers are positioned as required	P	O	AISC 360 TABLE N5.6-2
2. Joint brought to the snug-tight condition prior to the pre-tensioning operation	P	O	AISC 360 TABLE N5.6-2
3. Fastener component not turned by the wrench prevented from rotating	P	O	AISC 360 TABLE N5.6-2
4. Fasteners are pre-tensioned in accordance with the RCSC Specification, progressing systematically from the most rigid point toward the free edges.	P	O	AISC 360 TABLE N5.6-2
INSPECTION TASKS AFTER BOLTING	P	O	AISC 360 TABLE N5.6-2
1. Document acceptance or rejection of bolted connections	P	O	AISC 360 TABLE N5.6-2

O - Observe these items on a random basis. Operations need not be delayed pending these inspections
P - Perform these tasks for each welded joint or member, each bolted connection, or each steel element

NO.	DATE	REVISION	APP.

P.E. SEAL REQUIRED
PRELIMINARY
SUBJECT TO REVISION
This document is released for informational purposes under the authority of DAVID MOORE P.E. 139405 on 12/11/2025 It is not to be used for regulatory approval, permit, bidding, or construction purposes.

CONCEPT ENGINEERS
TX. FIRM REGISTRATION # F-04417
Structures for the whole community

IDS Engineering Group
13430 NW. Freeway
Suite 700
Houston, Tx. 77040
713.462.3178
TxEng Firm 2726
TxSurv Firm 10110700

CITY OF HOUSTON
HOUSTON PUBLIC WORKS

LIFT STATION RENEWAL AND REPLACEMENT FY 2023

GENERAL NOTES

WBS NUMBER	FOR CITY OF HOUSTON USE ONLY
R-000267-0179-4	
DRAWING SCALE	
AS NOTED	
CITY OF HOUSTON PM	
DWG. NO.	NAWARAJ PANTA, P.E.
WDF-S-04	SHEET NO. 244 OF 321

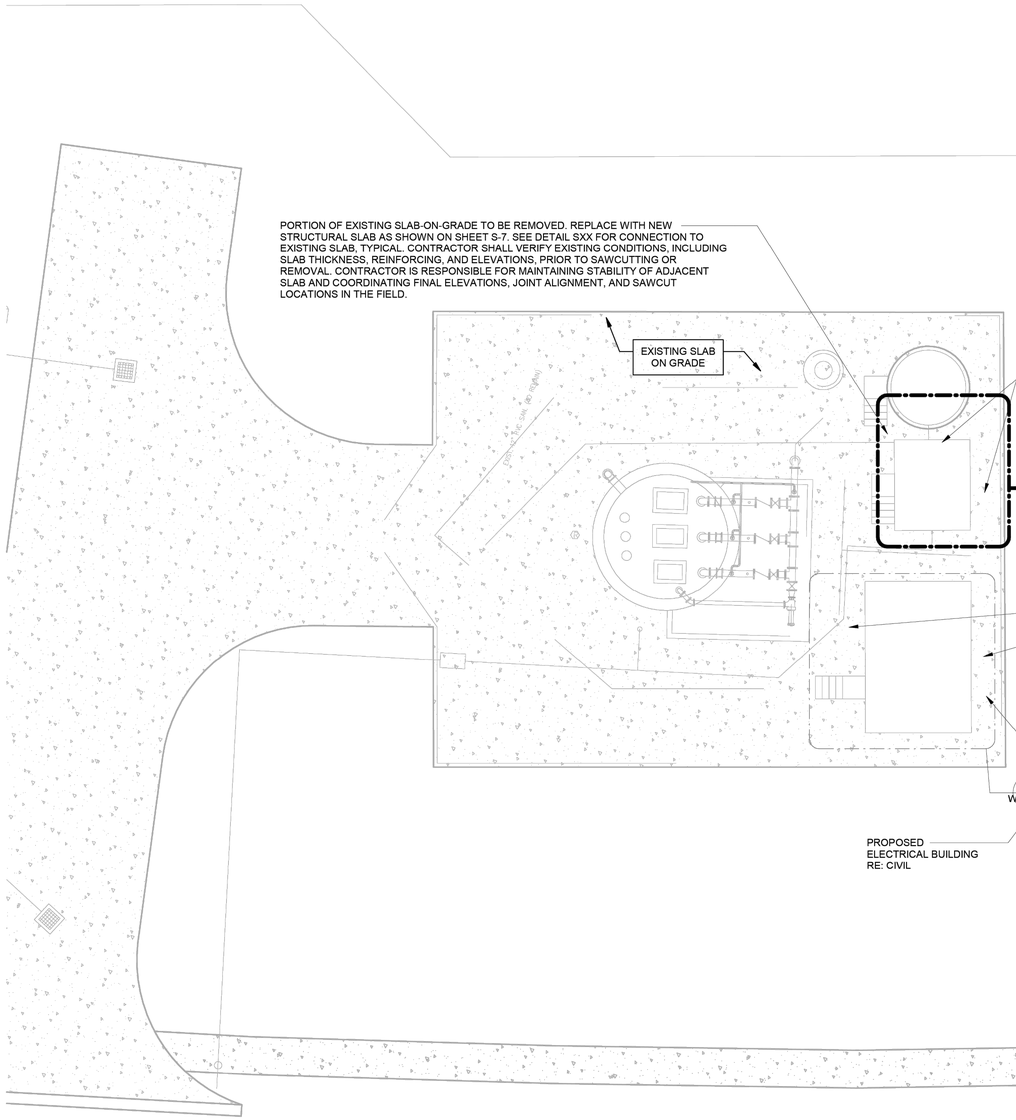

NO.	DATE	REVISION	APP.

P.E. SEAL REQUIRED

PRELIMINARY

SUBJECT TO REVISION

This document is released for informational purposes under the authority of DAVID MOORE P.E. 139405 on 12/11/2025 It is not to be used for regulatory approval, permit, bidding, or construction purposes.

CONCEPT ENGINEERS

TX. FIRM REGISTRATION # F-04417

Structures for the whole community

IDS Engineering Group

13430 NW. Freeway
Suite 700
Houston, Tx. 77040
713.462.3178

TxEng Firm 2726
TxSurv Firm 10110700

CITY OF HOUSTON

HOUSTON PUBLIC WORKS

LIFT STATION RENEWAL AND REPLACEMENT FY 2023

SITE PLAN

WBS NUMBER	FOR CITY OF HOUSTON USE ONLY
R-000267-0179-4	
DRAWING SCALE	
AS NOTED	
CITY OF HOUSTON PM	
NAWARAJ PANTA, P.E.	
SHEET NO. 245 OF 321	

DWG. NO. WDF-S-05

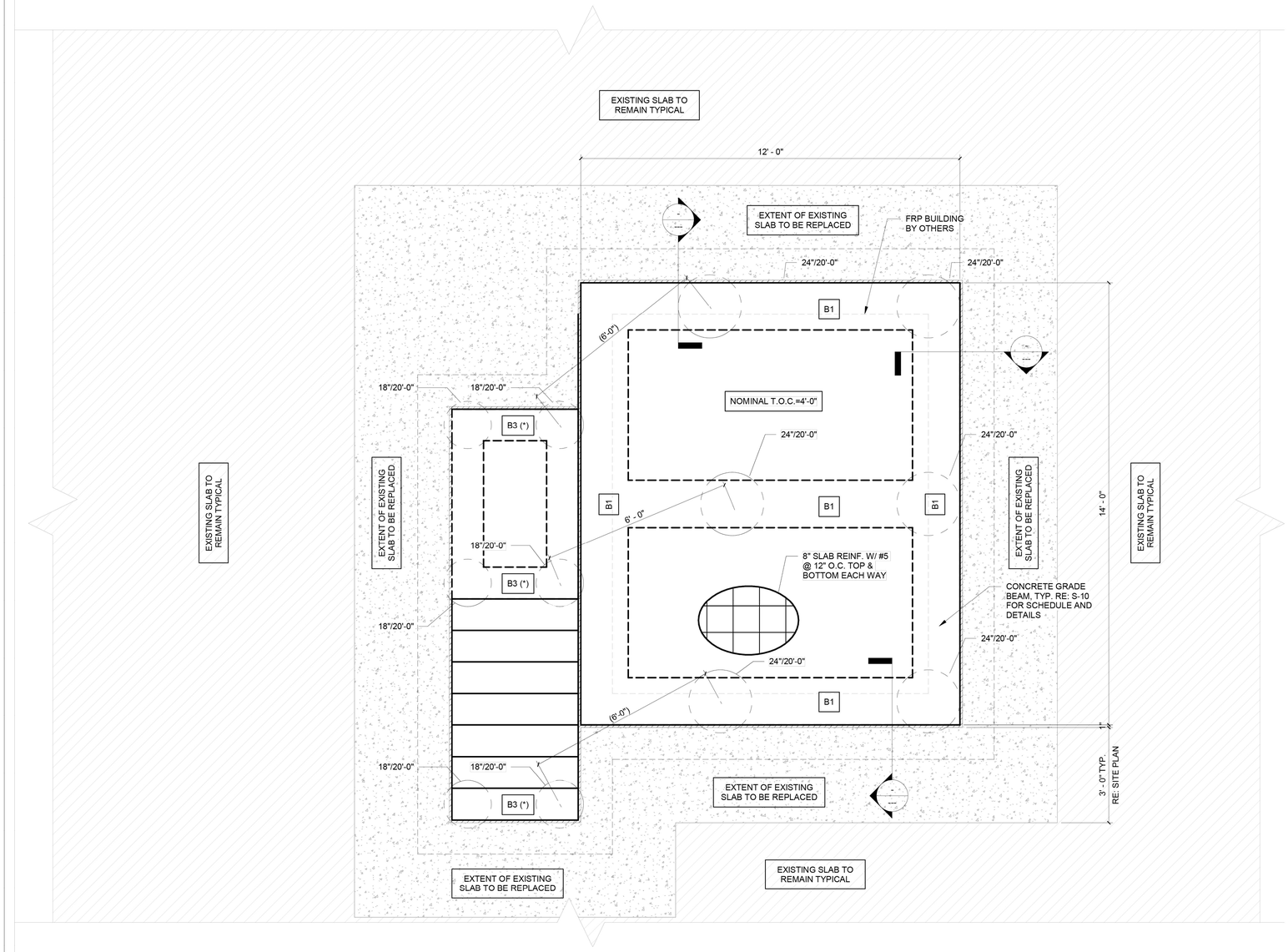

1 FRP BUILDING FOUNDATION PLAN

1/2" = 1'-0"

PLAN NOTES:

1. CENTER ALL DRILLED SHAFTS UNDER CENTERLINE OF STEEL COLUMN. IF NO STEEL COLUMN IS SHOWN, CENTER DRILLED SHAFTS UNDER CENTER OF GRADE BEAM.

2. ALL STEEL TO BE HOT DIPPED GALVANIZED.

3. FINISH FLOOR ELEVATION = 0'-0". FINISH FLOOR ELEVATION OF NEW STRUCTURAL SLAB TO MATCH ELEVATION OF EXISTING SLAB. RE: CIVIL FOR ACTUAL ELEVATION.

4. "P1" AS SHOWN ON PLAN INDICATES CONCRETE PEDESTAL TYPE P1. THE TOP ELEVATION OF ALL PEDESTALS IS AT -1'-0" TYP U.N.O. REFER TO S-XX FOR DIMENSIONS & REINF.

5. "B1" AS SHOWN ON PLAN INDICATES CONCRETE BEAM TYPE B1. THE TOP ELEVATION OF ALL BEAMS IS AT -1'-0" TYP U.N.O. REFER TO S-XX FOR BEAM SCHEDULE AND DETAILS.

6. " 18"/20'-0" " AS SHOWN ON PLAN INDICATES A DRILLED STRAIGHT SHAFT THAT IS 18" IN DIAMETER AND 20'-0" LONG MEASURED FROM BOTTOM OF FINISHED FLOOR. THE TOP ELEVATION OF ALL STRAIGHT SHAFTS ARE AT -3'-0", TYP, U.N.O. RE: S-XX FOR STRAIGHT SHAFT SCHEDULE AND DETAILS.

7. REFER TO CIVIL/MEP FOR DIMENSIONS AND LOCATIONS OF ALL SLOPED AND DEPRESSION.

8. (*) INDICATES BEAMS WITH VARYING DEPTHS. RE: SECTION

9. PORTION OF EXISTING SLAB-ON-GRADE TO BE REMOVED. REPLACE WITH NEW STRUCTURAL SLAB AS SHOWN ON SHEET S-7. SEE DETAIL SXX FOR CONNECTION TO EXISTING SLAB, TYPICAL. CONTRACTOR SHALL VERIFY EXISTING CONDITIONS, INCLUDING SLAB THICKNESS, REINFORCING, AND ELEVATIONS, PRIOR TO SAWCUTTING OR REMOVAL. CONTRACTOR IS RESPONSIBLE FOR MAINTAINING STABILITY OF ADJACENT SLAB AND COORDINATING FINAL ELEVATIONS, JOINT ALIGNMENT, AND SAWCUT LOCATIONS IN THE FIELD.

10. EXTENT OF EXISTING SLAB REMOVAL SHALL BE A MINIMUM OF 5'-0" BEYOND THE EDGE OF THE PROPOSED ELECTRICAL BUILDING AND CONCRETE STAIRS, TYPICAL. CONTRACTOR SHALL COORDINATE EXACT REMOVAL LIMITS AND BUILDING LOCATIONS WITH CIVIL DRAWINGS AND VERIFY ALL DIMENSIONS AND LAYOUT IN THE FIELD PRIOR TO DEMOLITION. STRUCTURAL DRAWINGS INDICATE GENERAL INTENT ONLY.

NO.	DATE	REVISION	APP.

P.E. SEAL REQUIRED

PRELIMINARY

SUBJECT TO REVISION

This document is released for informational purposes under the authority of DAVID MOORE P.E. 139405 on 12/11/2025 It is not to be used for regulatory approval, permit, bidding, or construction purposes.

CONCEPT ENGINEERS

TX. FIRM REGISTRATION # F-04417

Structures for the whole community

IDS Engineering Group

13430 NW. Freeway
Suite 700
Houston, Tx. 77040
713.462.3178

TxEng Firm 2726
TxSurv Firm 10110700

CITY OF HOUSTON

HOUSTON PUBLIC WORKS

LIFT STATION RENEWAL AND REPLACEMENT FY 2023

FRP BUILDING FOUNDATION PLAN

WBS NUMBER	FOR CITY OF HOUSTON USE ONLY
R-000267-0179-4	
DRAWING SCALE	
AS NOTED	
CITY OF HOUSTON PM	
NAWARAJ PANTA, P.E.	
SHEET NO. 246 OF 321	

DWG. NO. WDF-S-06

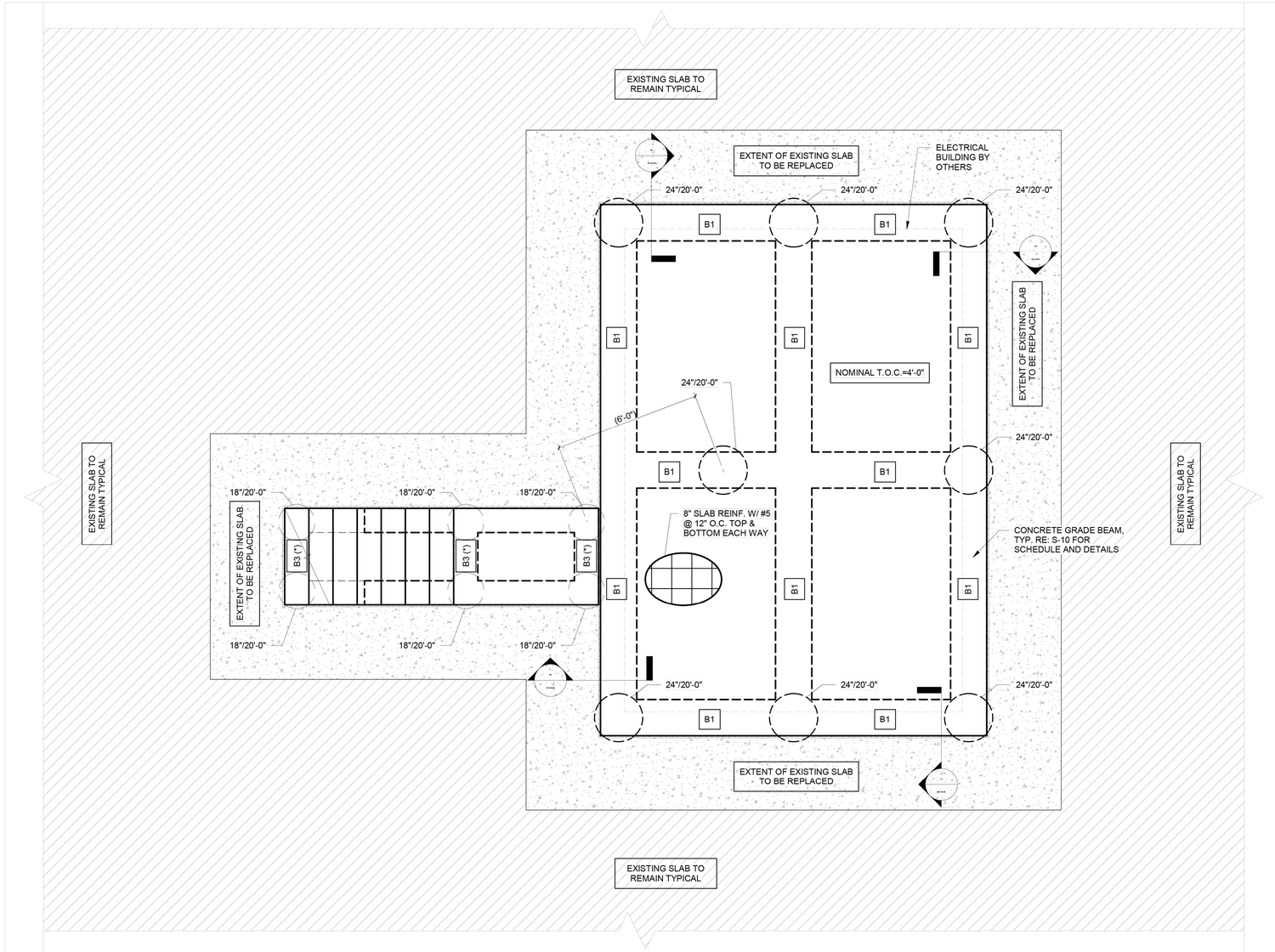

1 ELECTRICAL BUILDING FOUNDATION PLAN

3/8" = 1'-0"

PLAN NOTES:

1. CENTER ALL DRILLED SHAFTS UNDER CENTERLINE OF STEEL COLUMN. IF NO STEEL COLUMN IS SHOWN, CENTER DRILLED SHAFTS UNDER CENTER OF GRADE BEAM.

2. ALL STEEL TO BE HOT DIPPED GALVANIZED.

3. FINISH FLOOR ELEVATION = 0'-0". FINISH FLOOR ELEVATION OF NEW STRUCTURAL SLAB TO MATCH ELEVATION OF EXISTING SLAB. RE: CIVIL FOR ACTUAL ELEVATION.

4. "P1" AS SHOWN ON PLAN INDICATES CONCRETE PEDESTAL TYPE P1. THE TOP ELEVATION OF ALL PEDESTALS IS AT -1'-0" TYP U.N.O. REFER TO S-XX FOR DIMENSIONS & REINF.

5. "B1" AS SHOWN ON PLAN INDICATES CONCRETE BEAM TYPE B1. THE TOP ELEVATION OF ALL BEAMS IS AT -1'-0" TYP U.N.O. REFER TO S-XX FOR BEAM SCHEDULE AND DETAILS.

6. " 18"/20'-0" " AS SHOWN ON PLAN INDICATES A DRILLED STRAIGHT SHAFT THAT IS 18" IN DIAMETER AND 20'-0" LONG MEASURED FROM BOTTOM OF FINISHED FLOOR. THE TOP ELEVATION OF ALL STRAIGHT SHAFTS ARE AT -3'-0", TYP, U.N.O. RE: S-XX FOR STRAIGHT SHAFT SCHEDULE AND DETAILS.

7. REFER TO CIVIL/MEP FOR DIMENSIONS AND LOCATIONS OF ALL SLOPED AND DEPRESSION.

8. (*) INDICATES BEAMS WITH VARYING DEPTHS. RE: SECTION

9. PORTION OF EXISTING SLAB-ON-GRADE TO BE REMOVED. REPLACE WITH NEW STRUCTURAL SLAB AS SHOWN ON SHEET S-7. SEE DETAIL SXX FOR CONNECTION TO EXISTING SLAB, TYPICAL. CONTRACTOR SHALL VERIFY EXISTING CONDITIONS, INCLUDING SLAB THICKNESS, REINFORCING, AND ELEVATIONS, PRIOR TO SAWCUTTING OR REMOVAL. CONTRACTOR IS RESPONSIBLE FOR MAINTAINING STABILITY OF ADJACENT SLAB AND COORDINATING FINAL ELEVATIONS, JOINT ALIGNMENT, AND SAWCUT LOCATIONS IN THE FIELD.

10. EXTENT OF EXISTING SLAB REMOVAL SHALL BE A MINIMUM OF 5'-0" BEYOND THE EDGE OF THE PROPOSED ELECTRICAL BUILDING AND CONCRETE STAIRS, TYPICAL. CONTRACTOR SHALL COORDINATE EXACT REMOVAL LIMITS AND BUILDING LOCATIONS WITH CIVIL DRAWINGS AND VERIFY ALL DIMENSIONS AND LAYOUT IN THE FIELD PRIOR TO DEMOLITION. STRUCTURAL DRAWINGS INDICATE GENERAL INTENT ONLY.

NO.	DATE	REVISION	APP.

P.E. SEAL REQUIRED

PRELIMINARY

SUBJECT TO REVISION

This document is released for informational purposes under the authority of DAVID MOORE P.E. 139405 on 12/11/2025 It is not to be used for regulatory approval, permit, bidding, or construction purposes.

CONCEPT ENGINEERS
TX. FIRM REGISTRATION # F-04417
Structures for the whole community

IDS Engineering Group
13430 NW. Freeway
Suite 700
Houston, Tx. 77040
713.462.3178
TxEng Firm 2726
TxSurv Firm 10110700

CITY OF HOUSTON

HOUSTON PUBLIC WORKS

LIFT STATION RENEWAL AND REPLACEMENT FY 2023

ELECTRICAL BUILDING FOUNDATION PLAN

WBS NUMBER	FOR CITY OF HOUSTON USE ONLY
R-000267-0179-4	
DRAWING SCALE	
AS NOTED	
CITY OF HOUSTON PM	
NAWARAJ PANTA, P.E.	

DWG. NO.	SHEET NO.
WDF-S-07	247 OF 321

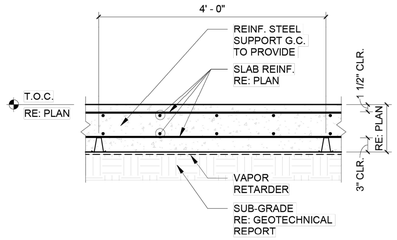

1 TYPICAL SLAB SECTION DETAIL

3/4" = 1'-0"

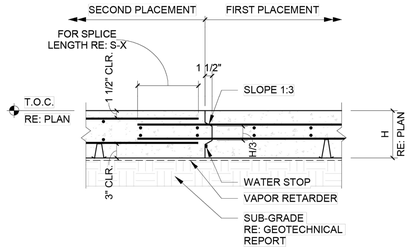

NOTE:
MAXIMUM 80 FEET BETWEEN CONSTRUCTION JOINTS AND 72 HOURS MINIMUM BETWEEN ADJACENT PLACEMENTS.

2 TYPICAL CONSTRUCTION JOINT

3/4" = 1'-0"

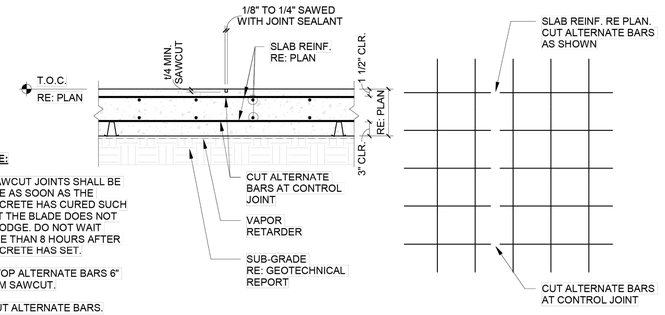

NOTE:

1. SAWCUT JOINTS SHALL BE MADE AS SOON AS THE CONCRETE HAS CURED SUCH THAT THE BLADE DOES NOT DISLODGE. DO NOT WAIT MORE THAN 8 HOURS AFTER CONCRETE HAS SET.
2. STOP ALTERNATE BARS 6" FROM SAWCUT.
3. CUT ALTERNATE BARS.

3 TYPICAL SLAB CONTROL JOINT

3/4" = 1'-0"

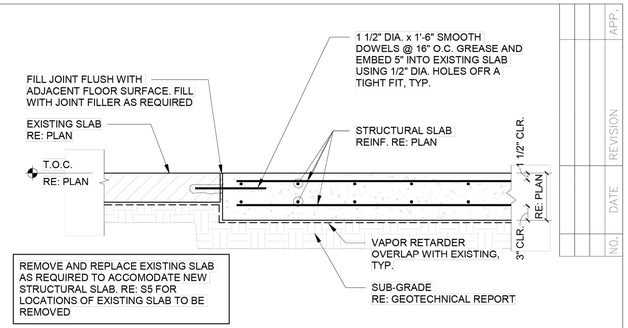

REMOVE AND REPLACE EXISTING SLAB AS REQUIRED TO ACCOMODATE NEW STRUCTURAL SLAB. RE: S5 FOR LOCATIONS OF EXISTING SLAB TO BE REMOVED

4 TYP NEW TO EXISTING SLAB CONSTRUCTION JOINT

NO SCALE

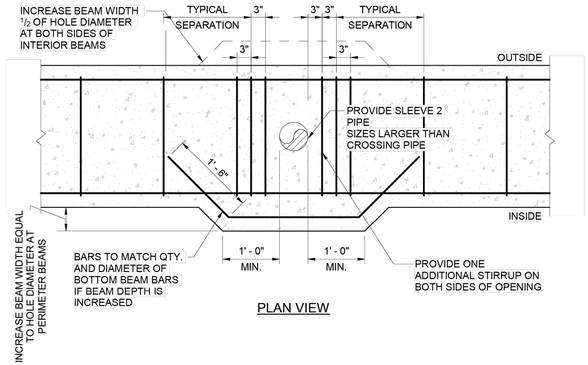

PLAN VIEW

5 VERT. PIPE OPENING LARGER THAN 3" THRU GD. BM.

3/4" = 1'-0"

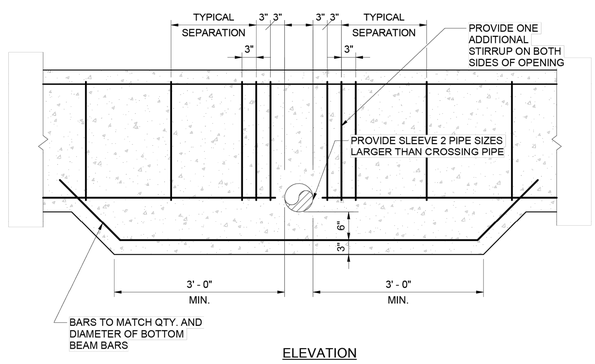

ELEVATION

6 PIPE OPENING THRU GD. BM. IN CONFLICT W/BOT. REINF.

3/4" = 1'-0"

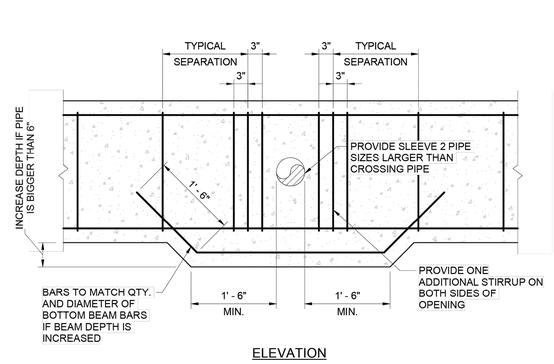

ELEVATION

7 TYP. DETAIL PIPE OPENING THRU GRADE BEAM

3/4" = 1'-0"

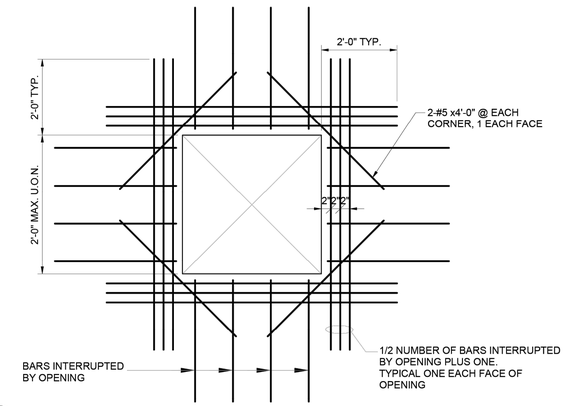

8 TYPICAL ADDITIONAL BAR PLACING DETAIL FOR SLAB

3/4" = 1'-0"

NOTE:

1. GENERAL CONTRACTOR TO COORDINATE REQUIRED SIZE OF BLOCK OUT FOR COLUMNS WITH ARCHITECT AND/OR OWNER.
2. APPLY BLOCK OUT THROUGH FULL DEPTH OF SLAB CONSTRUCTION.
3. BLOCK OUT SHALL BE 3" CLEAR OF EDGE OF BASE PLATE AND STRUCTURAL PLINTH BELOW.
4. COORDINATE CONTROL JOINTS WITH ARCHITECTURAL DRAWINGS.

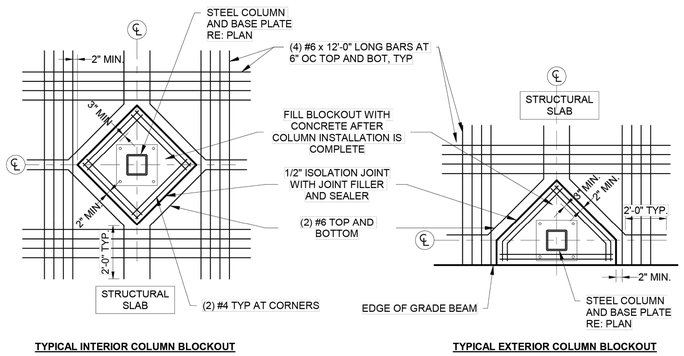

TYPICAL INTERIOR COLUMN BLOCKOUT

TYPICAL EXTERIOR COLUMN BLOCKOUT

9 TYPICAL BLOCKOUT DETAIL

1/2" = 1'-0"

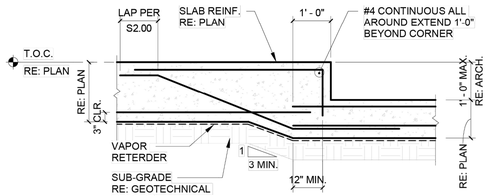

NOTE:
TRANSVERSE REINFORCEMENT NOT SHOWN FOR CLARITY

11 TYP. SLAB DEPRESSION DETAIL

1/2" = 1'-0"

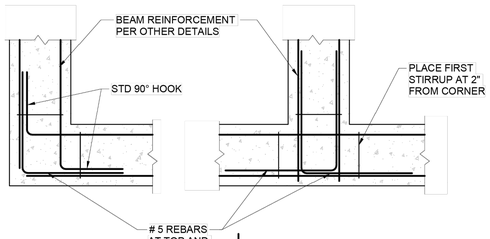

12 TYP. BAR PLACING DETAILS

3/4" = 1'-0"

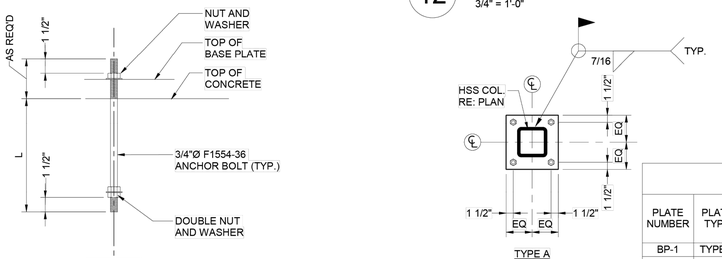

ELEVATION

10 TYPICAL ANCHOR BOLT DETAIL

1 1/2" = 1'-0"

TYPE A

7-BASE PLATE AND ANCHOR BOLT SCHEDULE

PLATE NUMBER	PLATE TYPE	PLATE THICKNESS	PLATE Fy	ANCHOR BOLT TYPE	ANCHOR BOLT DIAMETER	PLATE DIM.	ANCHOR BOLT LENGTH (L)
BP-1	TYPE A	3/4"	36 ksi	TYPE 1	3/4"	12"X12"	18"

13 BASE PLATE DETAILS AND SCHEDULE

3/4" = 1'-0"

P.E. SEAL REQUIRED

PRELIMINARY

SUBJECT TO REVISION

This document is released for informational purposes under the authority of DAVID MOORE P.E. 139405 on 12/11/2025 It is not to be used for regulatory approval, permit, bidding, or construction purposes.

CONCEPT ENGINEERS
TX. FIRM REGISTRATION # F-04417
Structures for the whole community

IDS Engineering Group
13430 NW. Freeway
Suite 700
Houston, Tx. 77040
713.462.3178
TxEng Firm 2726
TxSurv Firm 10110700

CITY OF HOUSTON

HOUSTON PUBLIC WORKS

LIFT STATION RENEWAL AND REPLACEMENT FY 2023

TYPICAL FOUNDATION DETAILS

WBS NUMBER	R-000267-0179-4
DRAWING SCALE	AS NOTED
CITY OF HOUSTON PM	NAWARAJ PANTA, P.E.
DWG. NO.	WDF-S-08
SHEET NO.	248 OF 321

FOR CITY OF HOUSTON USE ONLY

NO.	DATE	REVISION	APP.

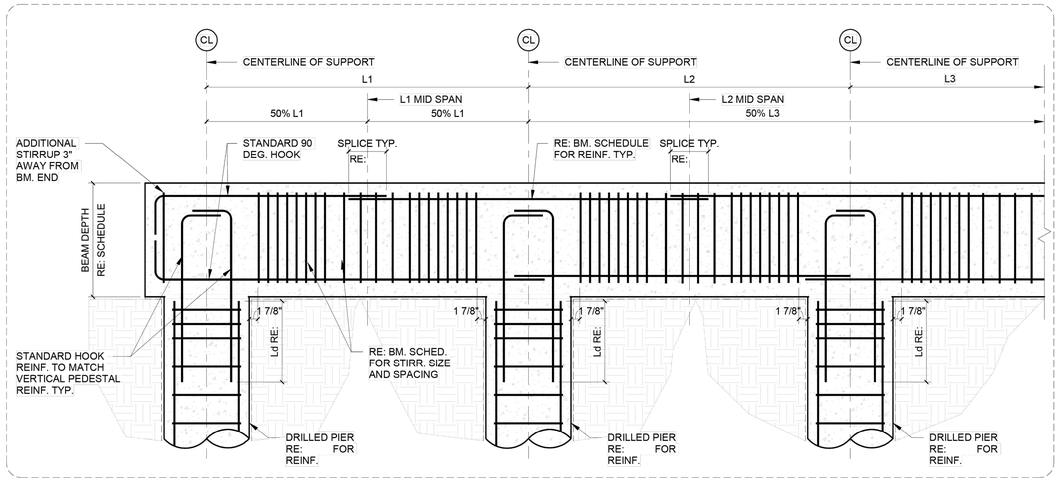

SECTION AT CONTINUOUS BEAM

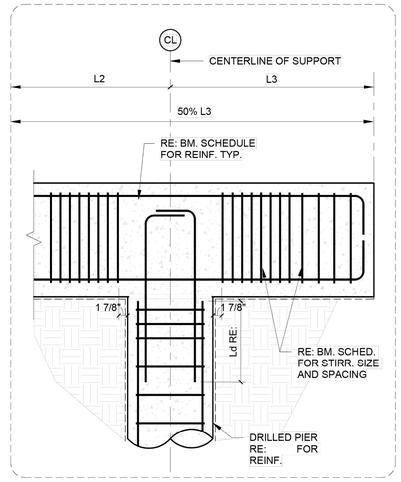

SECTION AT CANTILEVERED BEAM

1 TYPICAL REINFORCEMENT SPLICE DETAIL AT BEAM (NEW DETAIL)

3/4" = 1'-0"

BEAM SCHEDULE						
TAG	WIDTH	DEPTH	TOP REINFORCEMENT	MIDDLE REINFORCEMENT	BOTTOM REINFORCEMENT	STIRRUPS
B1	2'-0"	2'-0"	(5) #7	-	(5) #7	#4 @ 10" O.C. (3 @ 3" O.C., REST @ 10" O.C.) PROVIDE #4 @ 6" O.C. IN CANTILEVERED END. HOOK LONGITUDINAL BARS IN CANTILEVERED END.
B2	2'-0"	2'-0"	(3) #7	-	(3) #7	#4 @ 10" O.C. (3 @ 3" O.C., REST @ 10" O.C.)
B3	2'-0"	RE: PLAN	(5) #7	(6) #6	(5) #7	#4 @ 10" O.C. (3 @ 3" O.C., REST @ 10" O.C.)

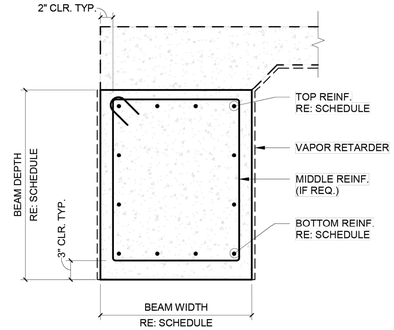

2 BEAM SCHEDULE1

1" = 1'-0"

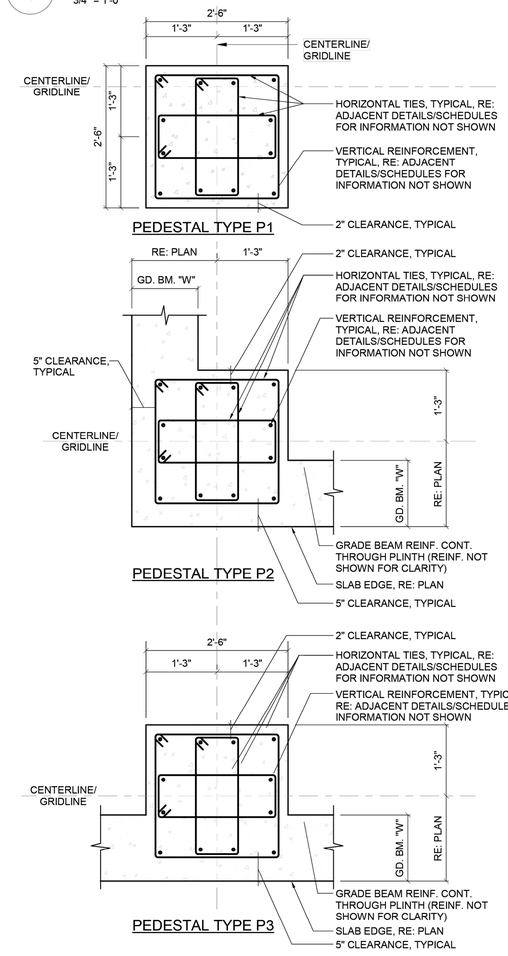

3 TYP. PEDESTAL DETAILS/SCHEDULES1

3/4" = 1'-0"

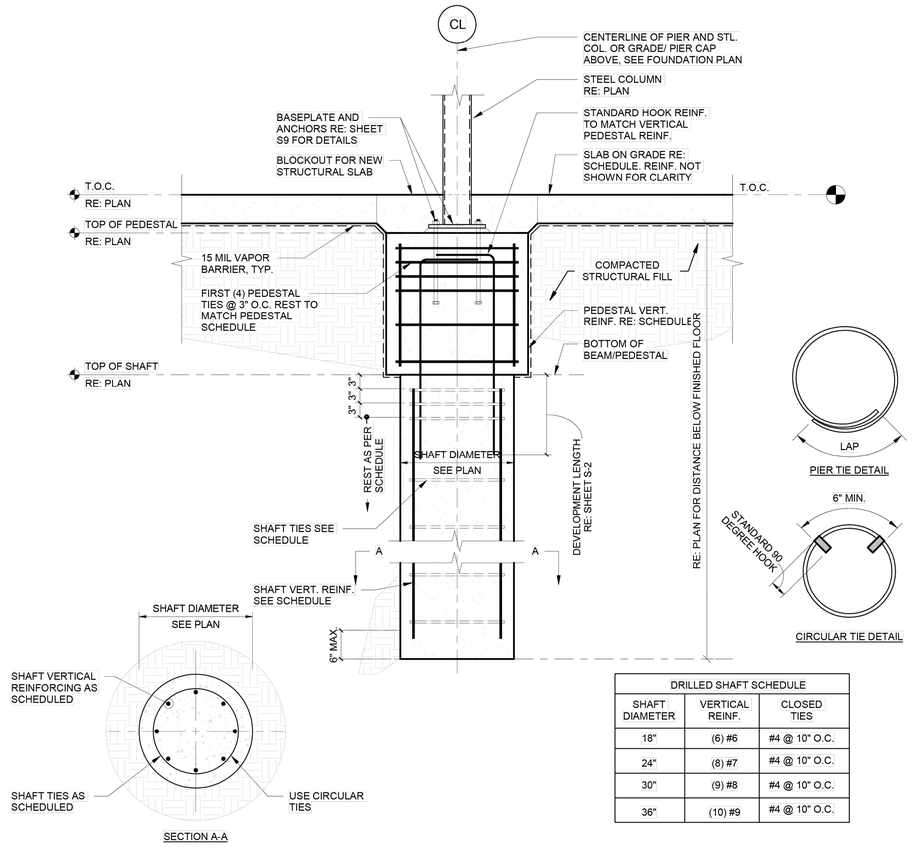

DRILLED SHAFT SCHEDULE		
SHAFT DIAMETER	VERTICAL REINF.	CLOSED TIES
18"	(6) #6	#4 @ 10" O.C.
24"	(8) #7	#4 @ 10" O.C.
30"	(9) #8	#4 @ 10" O.C.
36"	(10) #9	#4 @ 10" O.C.

4 TYPICAL STRAIGHT SHAFT DETAILS1

3/4" = 1'-0"

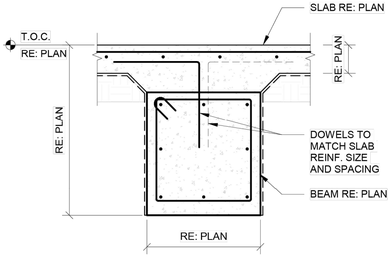

5 SECTION AT INTERIOR BEAM1

3/4" = 1'-0"

PEDESTAL SCHEDULE			
TAG	VERT. REINF.	CLOSED TIES	NOTES
TYPE P1	(12) #6	#4 @ 10" O.C.	TOP 4- #4 CLOSED TIES @ 3" O.C., REST @ 10" O.C.
TYPE P2	(12) #6	#4 @ 10" O.C.	TOP 4- #4 CLOSED TIES @ 3" O.C., REST @ 10" O.C.
TYPE P3	(12) #6	#4 @ 10" O.C.	TOP 4- #4 CLOSED TIES @ 3" O.C., REST @ 10" O.C.

6 PEDESTAL SCHEDULE1

1" = 1'-0"

APP.
REVISION
DATE
NO.

P.E. SEAL REQUIRED

PRELIMINARY

SUBJECT TO REVISION

This document is released for informational purposes under the authority of DAVID MOORE P.E. 139405 on 12/11/2025 It is not to be used for regulatory approval, permit, bidding, or construction purposes.

CONCEPT ENGINEERS
TX. FIRM REGISTRATION # F-04417
Structures for the whole community

IDS Engineering Group
13430 NW. Freeway
Suite 700
Houston, Tx. 77040
713.462.3178
TxEng Firm 2726
TxSurv Firm 10110700

CITY OF HOUSTON

HOUSTON PUBLIC WORKS

LIFT STATION RENEWAL AND REPLACEMENT FY 2023

FOUNDATION DETAILS & SCHEDULES

WBS NUMBER	FOR CITY OF HOUSTON USE ONLY
R-000267-0179-4	
DRAWING SCALE	
AS NOTED	
CITY OF HOUSTON PM	
NAWARAJ PANTA, P.E.	
DWG. NO. WDF-S-09	SHEET NO. 249 OF 321

PLOTTED: 12/11/2025 8:44 PM

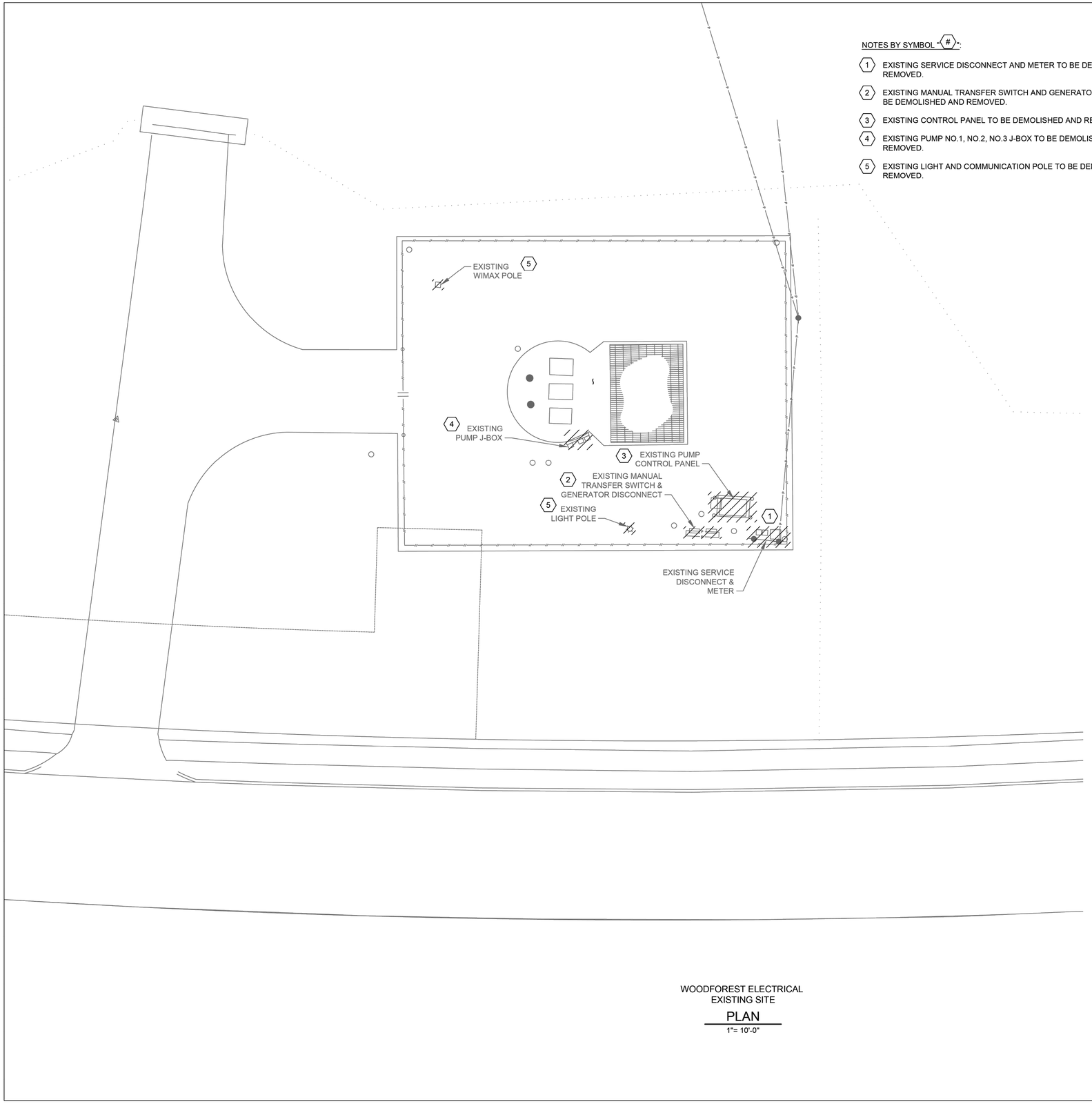

WOODFOREST ELECTRICAL
EXISTING SITE
PLAN
1"= 10'-0"

NOTES BY SYMBOL "⟨#⟩":

1. EXISTING SERVICE DISCONNECT AND METER TO BE DEMOLISHED AND REMOVED.
2. EXISTING MANUAL TRANSFER SWITCH AND GENERATOR DISCONNECT TO BE DEMOLISHED AND REMOVED.
3. EXISTING CONTROL PANEL TO BE DEMOLISHED AND REMOVED.
4. EXISTING PUMP NO.1, NO.2, NO.3 J-BOX TO BE DEMOLISHED AND REMOVED.
5. EXISTING LIGHT AND COMMUNICATION POLE TO BE DEMOLISHED AND REMOVED.



EXISTING SERVICE DISCONNECT, AND METER

PHOTOGRAPH A - (1) NTS



EXISTING MANUAL TRANSFER SWITCH, AND GENERATOR DISCONNECT

PHOTOGRAPH B - (2) NTS



EXISTING CONTROL PANEL

PHOTOGRAPH C - (3) NTS

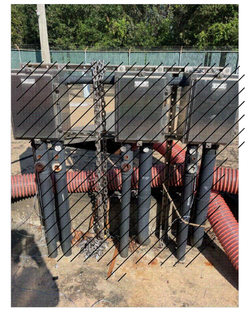

EXISTING PUMP J-BOX NO.1, NO.2, NO.3

PHOTOGRAPH D - (4) NTS



EXISTING LIGHT & COMMUNICATION POLE

PHOTOGRAPH E - (5) NTS

NO.	DATE	REVISION	APP.

FOR INTERIM REVIEW
ONLY NOT INTENDED FOR
PERMIT, BIDDING OR
CONSTRUCTION PURPOSES.
ENGINEER:
HOSS FOROUZAN
P.E. SERIAL NO.77748
12/15/2025

GAI
Gupta & Associates, Inc.
CONSULTING ENGINEERING
Registration No. F-2593
302 Dennis St.,
Houston, Texas 77006
Tel: 713-636-2936
Fax: 713-636-2987
email: hforouzan@gaiconsulting.com

IDS Engineering Group
13430 NW. Freeway
Suite 700
Houston, Tx. 77040
713.462.3178
TxEng Firm 2726
TxSurv Firm 10110700

CITY OF HOUSTON
HOUSTON PUBLIC WORKS

LIFT STATION RENEWAL
AND REPLACEMENT FY 2023

WOODFOREST LIFT STATION EXISTING SITE PLAN

WBS NUMBER	FOR CITY OF HOUSTON USE ONLY
R-000267-0179-4	
DRAWING SCALE	
HORIZ: VERT:	
CITY OF HOUSTON PM	
NAWARAJ PANTA, P.E.	

DWG. NO.	SHEET NO. 250 OF 321
WDF-E-1	

FILE PATH: O:\H8108_Lift Station Rehabilitation And Reconstruction (IDS)\6 Drawings\Electrical\Working\Woodforest\H8108_WDF-E-01.dwg

IDS JOB No. 0057-085-00

PLOTTED: 12/11/2025 8:44 PM

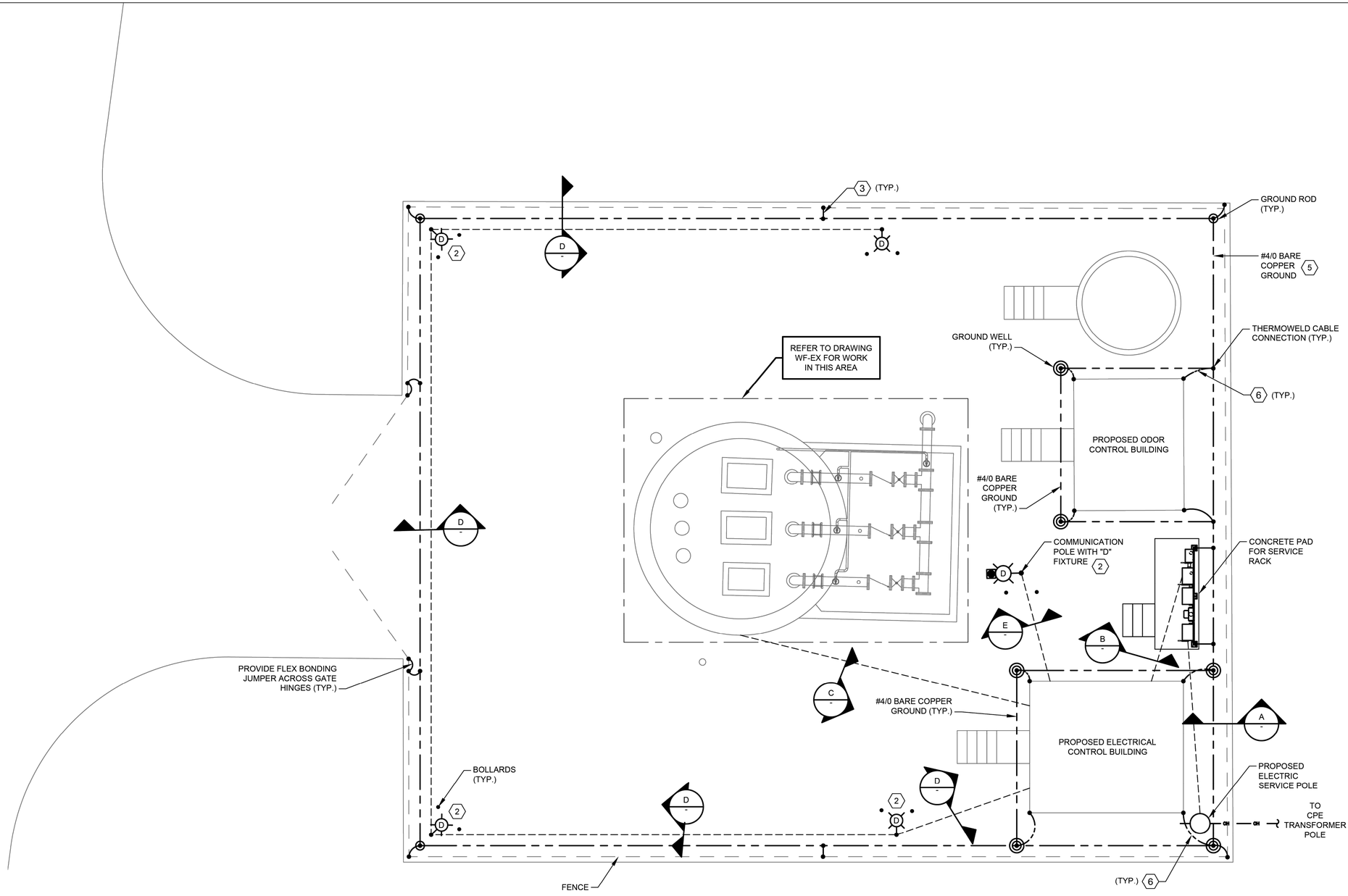

NOTES:

1. THE ELECTRICAL INSTALLATION IN THE WET WELL SHALL BE EXPLOSION PROOF, IN ACCORDANCE WITH THE NATIONAL ELECTRICAL CODE FOR CLASS I, DIVISION 1 LOCATIONS.
2. YARD LIGHT CONTROLLED BY LIGHTING SWITCH.
3. #2/0 BARE COPPER GROUND TO BE BONDED TO FENCE POST.
4. INSIDE WETWELL RATED NEMA CLASS , DIV. 1, OUTSIDE ABOVE GROUND, AROUND WETWELL RATED CLASS 1, DIV. 2 ACCORDING TO NFPA 820.
5. GROUNDING LOOP SHALL BE BURIED 30" BELOW FINISHED GRADE.
6. #4/0 BARE COPPER GROUND TO BE BONDED TO REBAR IN CONCRETE FOOTER.

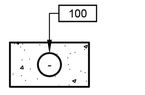

DUCTBANK SECTION A
NTS

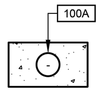

DUCTBANK SECTION B
NTS

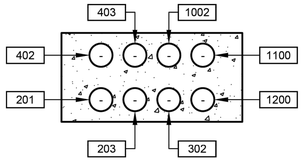

DUCTBANK SECTION C
NTS

WOODFOREST ELECTRICAL PROPOSED SITE PLAN
1"= 5'-0"

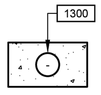

DUCTBANK SECTION A
NTS

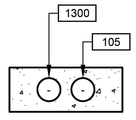

DUCTBANK SECTION E
NTS

NO.	DATE	REVISION	APP.

FOR INTERIM REVIEW ONLY NOT INTENDED FOR PERMIT, BIDDING OR CONSTRUCTION PURPOSES.
ENGINEER:
HOSS FOROUZAN
P.E. SERIAL NO.77748
12/15/2025

GAI
Gupta & Associates, Inc.
CONSULTING ENGINEERING
Registration No. F-2593
302 Dennis St.,
Houston, Texas 77006
Tel: 713-636-2936
Fax: 713-636-2987
email: hforouzan@gaiconsulting.com

IDS Engineering Group
13430 NW. Freeway
Suite 700
Houston, Tx. 77040
713.462.3178
TxEng Firm 2726
TxSurv Firm 10110700

CITY OF HOUSTON
HOUSTON PUBLIC WORKS

LIFT STATION RENEWAL AND REPLACEMENT FY 2023

WOODFOREST LIFT STATION PROPOSED SITE PLAN

WBS NUMBER	FOR CITY OF HOUSTON USE ONLY
R-000267-0179-4	
DRAWING SCALE	
HORIZ: VERT:	
CITY OF HOUSTON PM	
NAWARAJ PANTA, P.E.	
SHEET NO. 251 OF 321	

DWG. NO. WDF-E-2

IDS JOB No. 0057-085-00

FILE PATH: O:\H8108_Lift Station Rehabilitation And Reconstruction (IDS)\6 Drawings\Electrical\Working\Woodforest\H8108_WDF-E-02.dwg

PLOTTED: 12/11/2025 8:44 PM

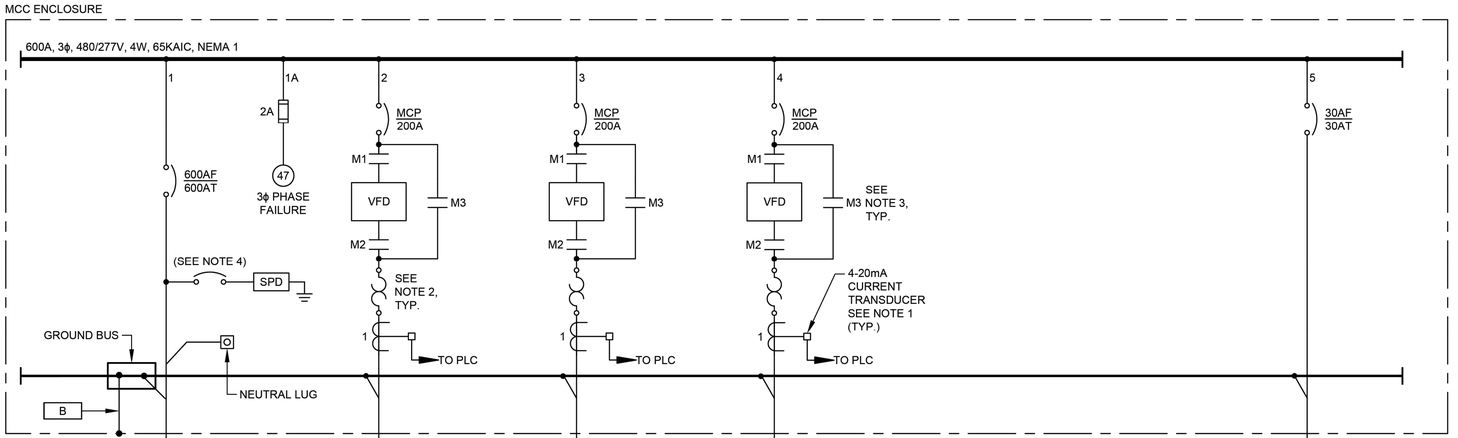

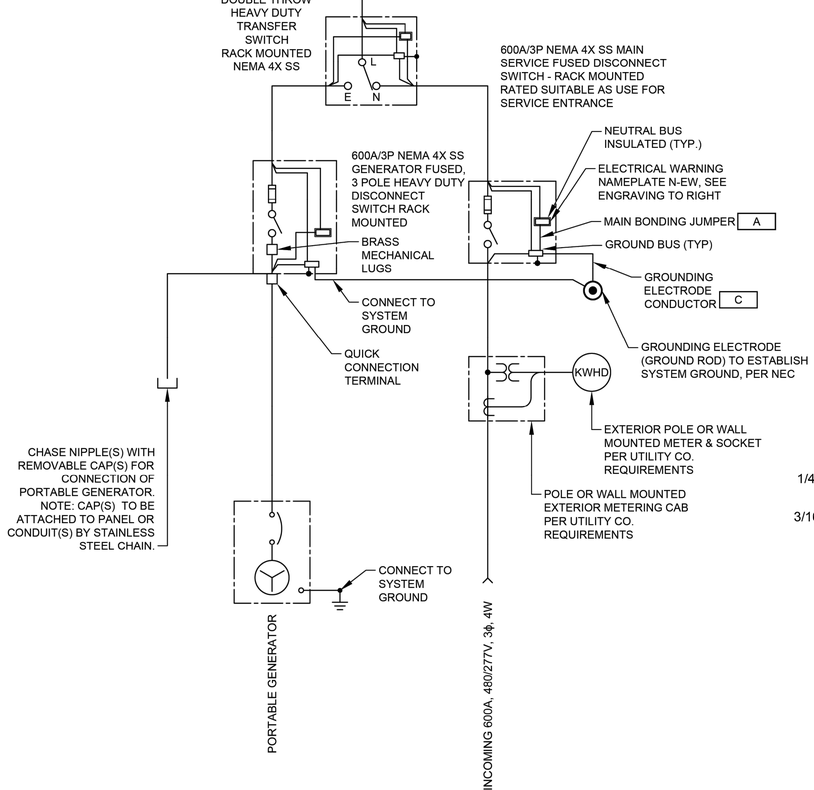

PUMP STATION ELECTRICAL LOAD ANALYSIS		
LOAD DESCRIPTION	CONNECTED KVA	DEMAND KVA
PUMP NO.1 (85HP)	92.3	92.3
PUMP NO.2 (85HP)	92.3	92.3
PUMP NO.3 (85HP) (STANDBY)	92.3	--
LIGHTING @ 125%	0.4	0.5
RECEPTACLE @ 180 VA	0.5	0.5
HVAC	3.5	3.5
MISC	14.2	14.2
25% OF LARGEST MOTOR LOAD		23.1
TOTAL CALCULATED LOAD		226.4
226.4KVA @ 480V/3ϕ = 188.4A		
600A SERVICE EXCEEDS NEC REQUIREMENTS		

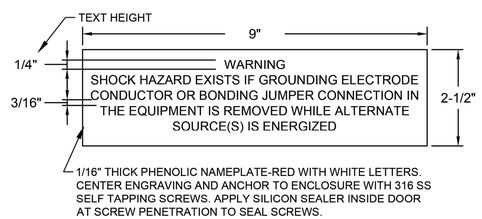

1/16" THICK PHENOLIC NAMEPLATE-RED WITH WHITE LETTERS. CENTER ENGRAVING AND ANCHOR TO ENCLOSURE WITH 316 SS SELF TAPPING SCREWS. APPLY SILICON SEALER INSIDE DOOR AT SCREW PENETRATION TO SEAL SCREWS.

ELECTRICAL WARNING NAMEPLATE N-EW ENGRAVING

NOTES:

1. PROVIDE 5A PRIMARY TO 4-20mA CURRENT TRANSDUCER.
2. COMBINATION OF CT AND OVERLOAD RELAY AS REQUIRED.
3. STARTER NEMA SIZE 3 OR GREATER SHALL BE VACUUM TYPE.
4. PROVIDE BREAKER ACCORDING TO MANUFACTURER'S REQUIREMENTS.
5. POINT TO POINT METHOD IS USED FOR SHORT CIRCUIT CURRENT CALCULATION.
6. CONTRACTOR SHALL PROVIDE A PERMANENTLY AFFIXED LABEL (2" X 3") SHOWING THE AVAILABLE FAULT CURRENT AND CALCULATION DATE. THE LABEL SHALL BE BLUE LETTERING ON A CONTRASTING BACKGROUND.
7. THE INSULATION TYPES OF ALL ELECTRICAL CONDUCTORS USED IN THE PROJECT HAVE BEEN SPECIFIED IN ELECTRICAL SPECIFICATIONS (16120, 16121, AND 16122). THE TYPES OF CONDUITS USED IN THE PROJECT HAS BEEN SPECIFIED IN ELECTRICAL SPECIFICATIONS 16111.
8. REFER TO INSTRUMENTATION DRAWINGS WDF-I-10, WDF-I-11, FOR PUMP CONTROL SCHEMATIC.

NO.	DATE	REVISION	APP.

FOR INTERIM REVIEW
ONLY NOT INTENDED FOR
PERMIT, BIDDING OR
CONSTRUCTION PURPOSES.
ENGINEER:
HOSS FOROUZAN
P.E. SERIAL NO.77748
12/15/2025

GAI
Gupta & Associates, Inc.
CONSULTING ENGINEERING
Registration No. F-2593
302 Dennis St.,
Houston, Texas 77006
Tel: 713-636-2936
Fax: 713-636-2987
email: hforouzan@gaiconsulting.com

IDS Engineering Group
13430 NW. Freeway
Suite 700
Houston, Tx. 77040
713.462.3178
TxEng Firm 2726
TxSurv Firm 10110700

CITY OF HOUSTON
HOUSTON PUBLIC WORKS

LIFT STATION RENEWAL AND REPLACEMENT FY 2023

WOODFOREST LIFT STATION SINGLE LINE DIAGRAM

WBS NUMBER	FOR CITY OF HOUSTON USE ONLY
R-000267-0179-4	
DRAWING SCALE	
HORIZ: VERT:	
CITY OF HOUSTON PM	
NAWARAJ PANTA, P.E.	
DWG. NO. WDF-E-3	SHEET NO. 252 OF 321

IDS JOB No. 0057-085-00

FILE PATH: O:\H8108_Lift Station Rehabilitation And Reconstruction (IDS)\6 Drawings\Electrical\Working\Woodforest\H8108_WDF-E-03.dwg

PLOTTED: 12/11/2025 8:44 PM

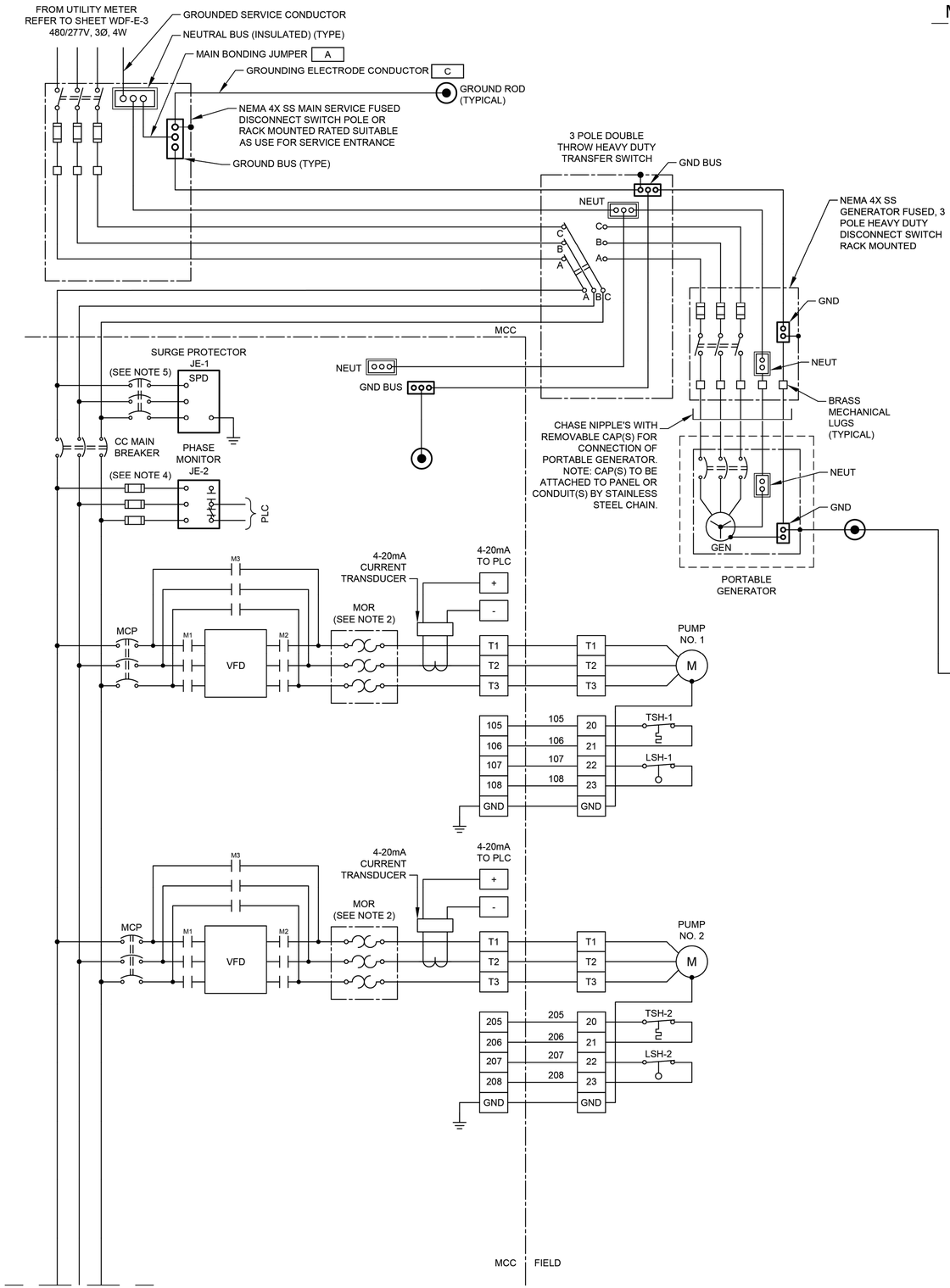

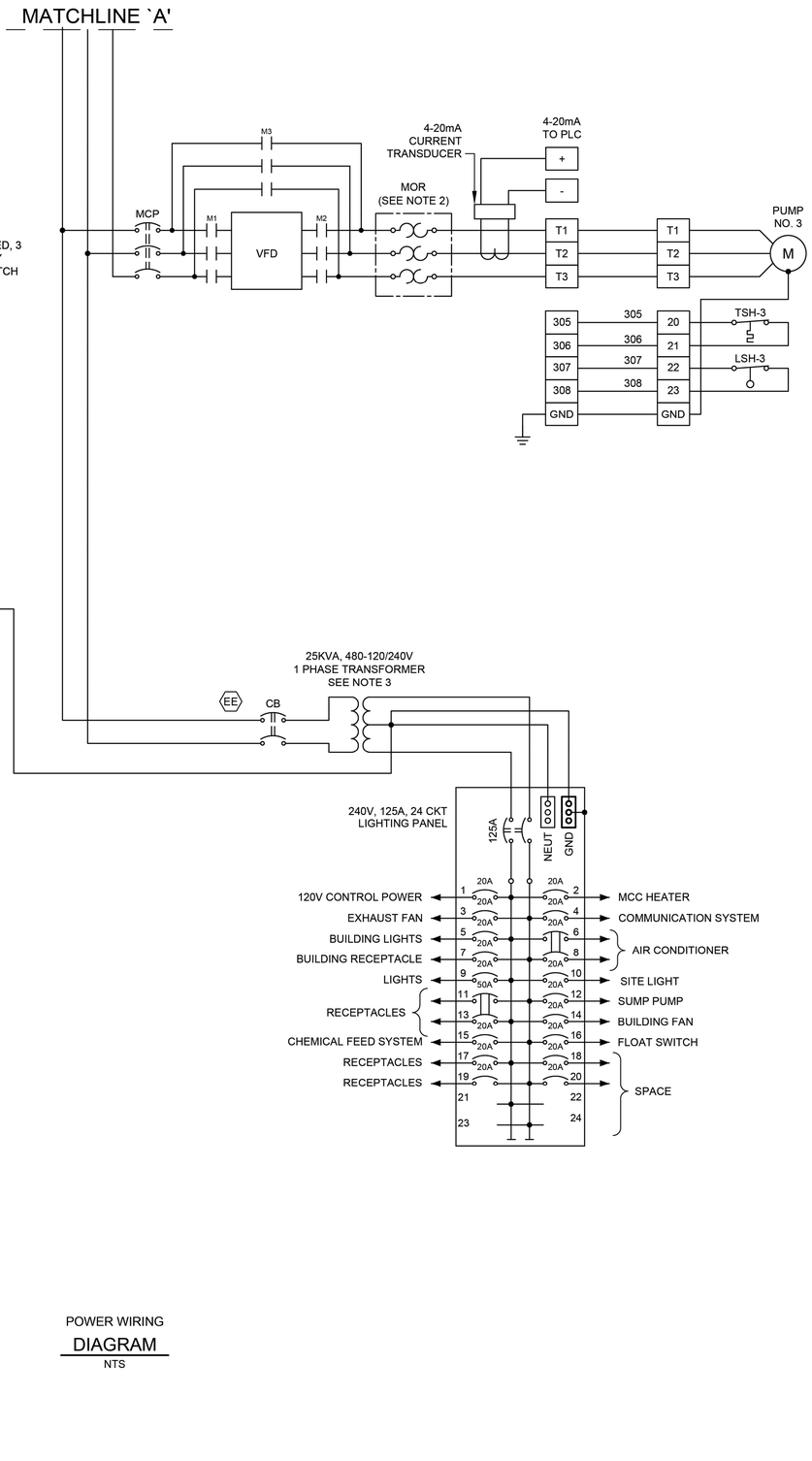

POWER WIRING
DIAGRAM
NTS

NOTES:

1. UNLESS OTHERWISE INDICATE, ALL DEVICES WITHOUT FURTHER DESIGNATION ARE LOCATED AT THE CONTROL PANEL.
2. THE COMBINATION OF CT AND MOTOR OVERLOAD RELAY IF REQUIRED.
3. CONTRACTOR SHALL TERMINATE POWER & CONTROL WIRES PER MANUFACTURER'S REQUIREMENTS.
4. PROVIDE FUSE SIZE ACCORDING TO MANUFACTURER'S REQUIREMENTS.
5. PROVIDE BREAKER SIZE ACCORDING TO MANUFACTURER'S REQUIREMENTS.

GENERAL NOTES:

1. NO ELECTRICAL MATERIAL, APPARATUS, DEVICES, APPLIANCES, FIXTURES, OR EQUIPMENT SHALL BE SOLD OR INSTALLED IN THE CITY UNLESS THEY ARE IN CONFORMANCE WITH THE PROVISIONS OF SECTION 508 CITY OF HOUSTON ELECTRICAL CODE, THE LAWS OF THE STATE OF TEXAS AND ANY APPLICABLE RULES AND REGULATIONS ISSUED UNDER THE AUTHORITY OF THE STATE STATUES. THE MAKER'S NAME, TRADEMARK, OR OTHER IDENTIFICATION SYMBOL SHALL BE PLACED ON ALL ELECTRICAL MATERIALS, APPARATUS, DEVICES, APPLIANCES, FIXTURES, AND EQUIPMENT USED OR INSTALLED UNDER THE PROVISIONS OF THIS CODE. ALL ELECTRICAL MATERIALS AND EQUIPMENT SHALL BE LISTED AND LABELED FOR THE INTENDED USE AND SHALL BE INCLUDED IN A LIST PUBLISHED BY AN APPROVAL AGENCY.

NO.	DATE	REVISION	APP.

FOR INTERIM REVIEW
ONLY NOT INTENDED FOR
PERMIT, BIDDING OR
CONSTRUCTION PURPOSES.
ENGINEER:
HOSS FOROUZAN
P.E. SERIAL NO.77748
12/15/2025

GAI
Gupta & Associates, Inc.
CONSULTING ENGINEERING
Registration No. F-2593
302 Dennis St.,
Houston, Texas 77006
Tel: 713-636-2916
Fax: 713-636-2987
email: hforouzan@gaiconsulting.com

IDS Engineering Group
13430 NW. Freeway
Suite 700
Houston, Tx. 77040
713.462.3178
TxEng Firm 2726
TxSurv Firm 10110700

CITY OF HOUSTON
HOUSTON PUBLIC WORKS

LIFT STATION RENEWAL
AND REPLACEMENT FY 2023

WOODFOREST LIFT STATION
THREE–LINE DIAGRAM

WBS NUMBER	FOR CITY OF HOUSTON USE ONLY
R-000267-0179-4	
DRAWING SCALE	
HORIZ: VERT:	
CITY OF HOUSTON PM	
NAWARAJ PANTA, P.E.	
DWG. NO. WDF–E–4	SHEET NO. 253 OF 321

IDS JOB No. 0057-085-00

FILE PATH: O:\H8108_Lift Station Rehabilitation And Reconstruction (IDS)\6 Drawings\Electrical\Working\Woodforest\H8108_WDF-E-04.dwg

PLOTTED: 12/11/2025 8:44 PM

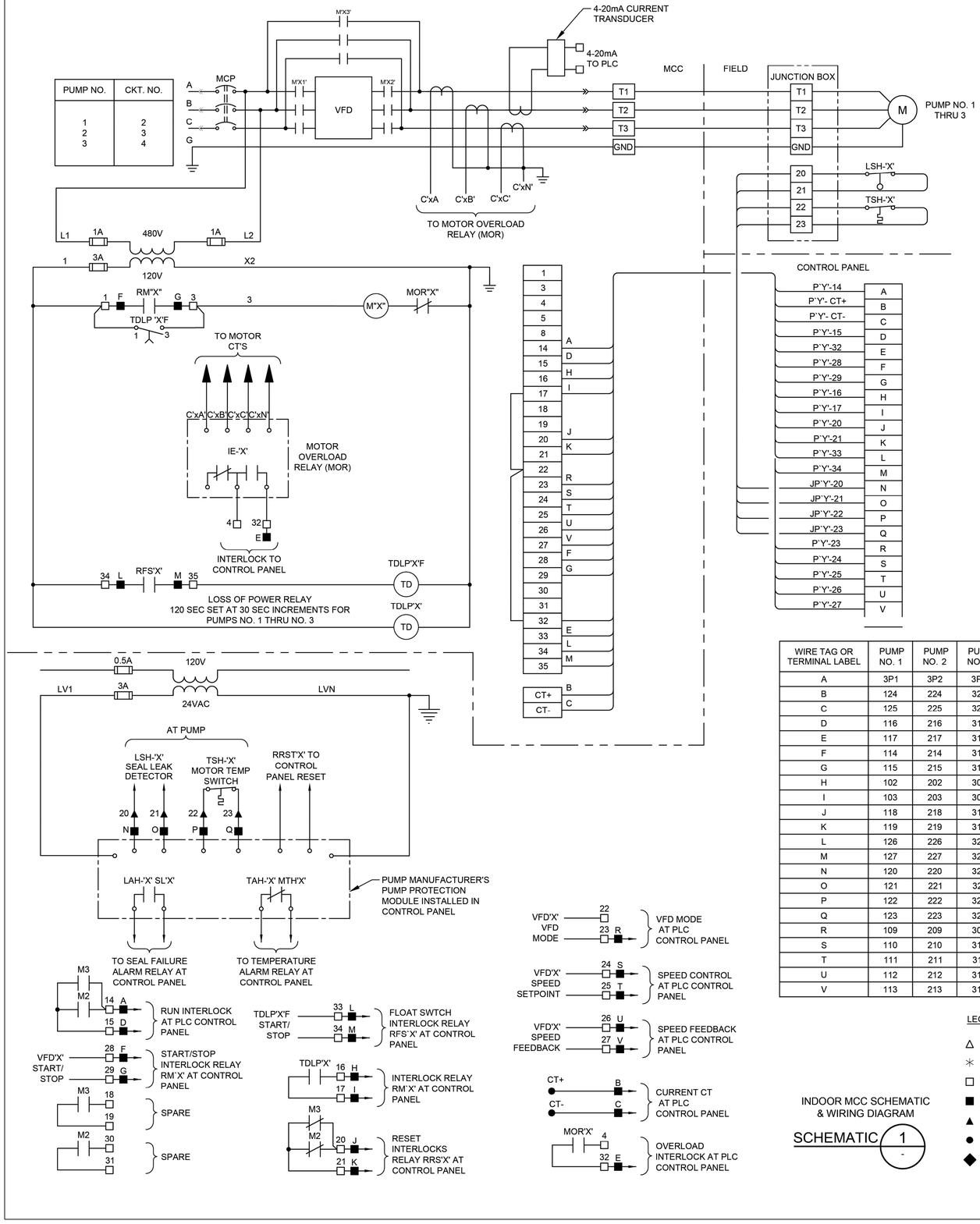

WIRE TAG OR TERMINAL LABEL	PUMP NO. 1	PUMP NO. 2	PUMP NO. 3	FUNCTION
A	3P1	3P2	3P3	24VDC CONTROL
B	124	224	324	4-20mA CURRENT TRANSDUCER
C	125	225	325	4-20mA CURRENT TRANSDUCER
D	116	216	316	M CONTACT
E	117	217	317	OVERLOAD ALARM
F	114	214	314	RUN INTERLOCK
G	115	215	315	RUN INTERLOCK
H	102	202	302	LOSS OF POWER TIMER
I	103	203	303	LOSS OF POWER TIMER
J	118	218	318	ALARM RESET INTERLOCK
K	119	219	319	ALARM RESET INTERLOCK
L	126	226	326	FLOAT SWITCH RUN INTERLOCK
M	127	227	327	FLOAT SWITCH RUN INTERLOCK
N	120	220	320	SEAL LEAK DETECTOR
O	121	221	321	SEAL LEAK DETECTOR
P	122	222	322	MOTOR TEMPERATURE SWITCH
Q	123	223	323	MOTOR TEMPERATURE SWITCH
R	109	209	309	VFD MODE
S	110	210	310	4-20mA VFD SPEED CONTROL
T	111	211	311	4-20mA VFD SPEED CONTROL
U	112	212	312	4-20mA VFD SPEED INDICATION
V	113	213	313	4-20mA VFD SPEED INDICATION

INDOOR MCC SCHEMATIC & WIRING DIAGRAM

SCHEMATIC 1 / -

LEGEND

- △ DEVICE OR FIELD TERMINAL LOCATED AT MOTOR
- ✳ DEVICE OR FIELD TERMINAL LOCATED REMOTE
- □ DEVICE OR FIELD TERMINAL LOCATED AT POWER PANEL
- ■ FIELD TERMINAL LOCATED AT CONTROL PANEL
- ▲ REMOTE TERMINAL
- ● DEVICE TERMINAL NO.
- ◆ PC INTERFACE TERMINAL

NO.	DATE	REVISION	APP.

FOR INTERIM REVIEW
ONLY NOT INTENDED FOR
PERMIT, BIDDING OR
CONSTRUCTION PURPOSES.
ENGINEER:
HOSS FOROUZAN
P.E. SERIAL NO.77748
12/15/2025

GAI
Gupta & Associates, Inc
CONSULTING ENGINEERING
Registration No. F-2593
302 Dennis St.,
Houston, Texas 77006
Tel: 713-636-2936
Fax: 713-636-2987
email: hforouzan@gaiconsulting.com

IDS Engineering Group
13430 NW. Freeway
Suite 700
Houston, Tx. 77040
713.462.3178
TxEng Firm 2726
TxSurv Firm 10110700

CITY OF HOUSTON
HOUSTON PUBLIC WORKS

LIFT STATION RENEWAL AND REPLACEMENT FY 2023

WOODFOREST LIFT STATION MCC SCHEMATIC & WIRING DIAGRAM

WBS NUMBER	FOR CITY OF HOUSTON USE ONLY
R-000267-0179-4	
DRAWING SCALE	
HORIZ: VERT:	
CITY OF HOUSTON PM	
NAWARAJ PANTA, P.E.	
DWG. NO. WDF–E–5	SHEET NO. 254 OF 321

IDS JOB No. 0057-085-00

FILE PATH: O:\H8108_Lift Station Rehabilitation And Reconstruction (IDS)\6 Drawings\Electrical\Working\Woodforest\H8108_WDF–E–05.dwg

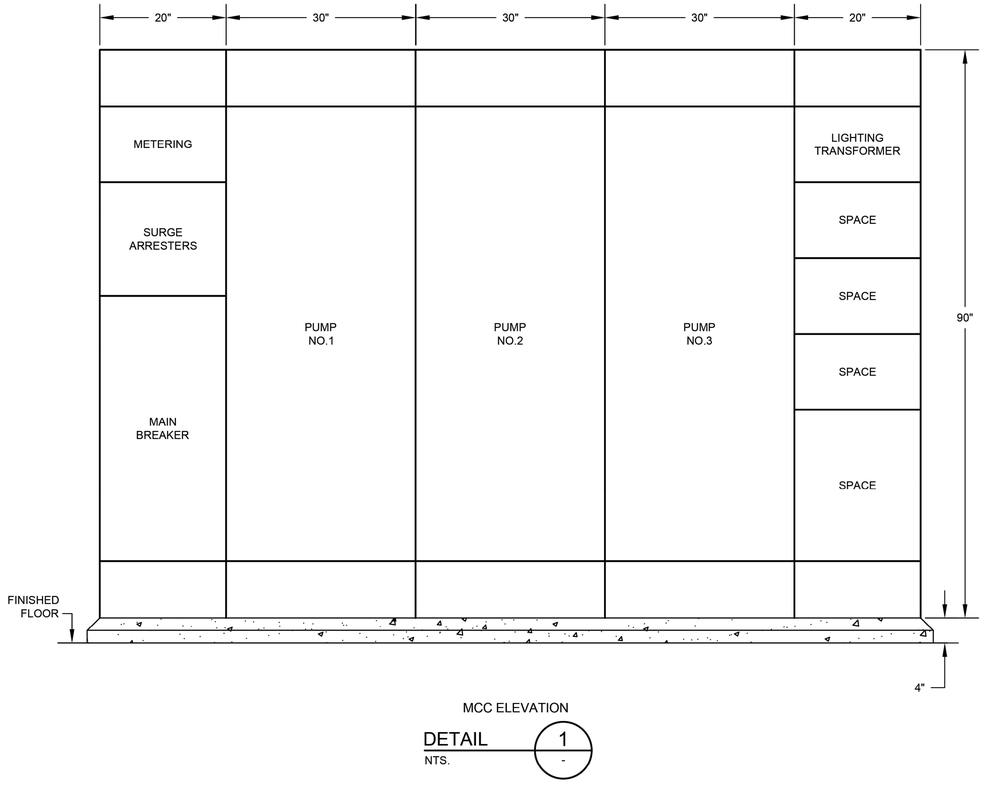

MCC ELEVATION

DETAIL 1
NTS. -

NO.	DATE	REVISION	APP.

FOR INTERIM REVIEW
ONLY NOT INTENDED FOR
PERMIT, BIDDING OR
CONSTRUCTION PURPOSES.
ENGINEER:
HOSS FOROUZAN
P.E. SERIAL NO.77748
12/15/2025

GAI
Gupta & Associates, Inc.
CONSULTING ENGINEERING
Registration No. F-2593
302 Dennis St.,
Houston, Texas 77006
Tel: 713-636-2936
Fax: 713-636-2987
email: hforouzan@gaiconsulting.com

IDS Engineering Group
13430 NW. Freeway
Suite 700
Houston, Tx. 77040
713.462.3178
TxEng Firm 2726
TxSurv Firm 10110700

CITY OF HOUSTON
HOUSTON PUBLIC WORKS

LIFT STATION RENEWAL
AND REPLACEMENT FY 2023

WOODFOREST LIFT STATION
MCC ELEVATION

WBS NUMBER	FOR CITY OF HOUSTON USE ONLY
R-000267-0179-4	
DRAWING SCALE	
HORIZ: VERT:	
CITY OF HOUSTON PM	
NAWARAJ PANTA, P.E.	
SHEET NO. 255 OF 321	

DWG. NO. WDF–E–6

IDS JOB No. 0057-085-00

PLOTTED: 12/11/2025 8:44 PM

FILE PATH: O:\H8108_Lift Station Rehabilitation And Reconstruction (IDS)\6 Drawings\Electrical\Working\Woodforest\H8108_WDF–E–06.dwg

PLOTTED: 12/11/2025 8:44 PM

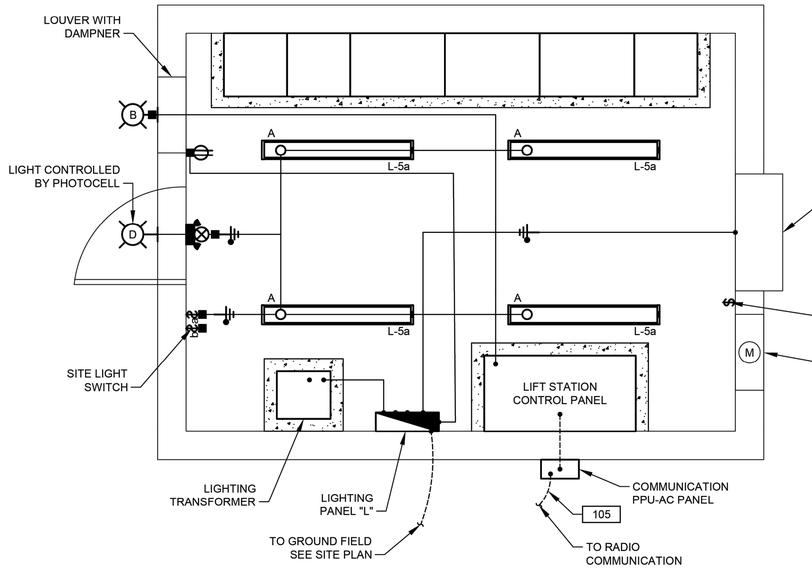

LIGHTING & COMMUNICATION SYSTEM PLAN

1/2"=1'-0"

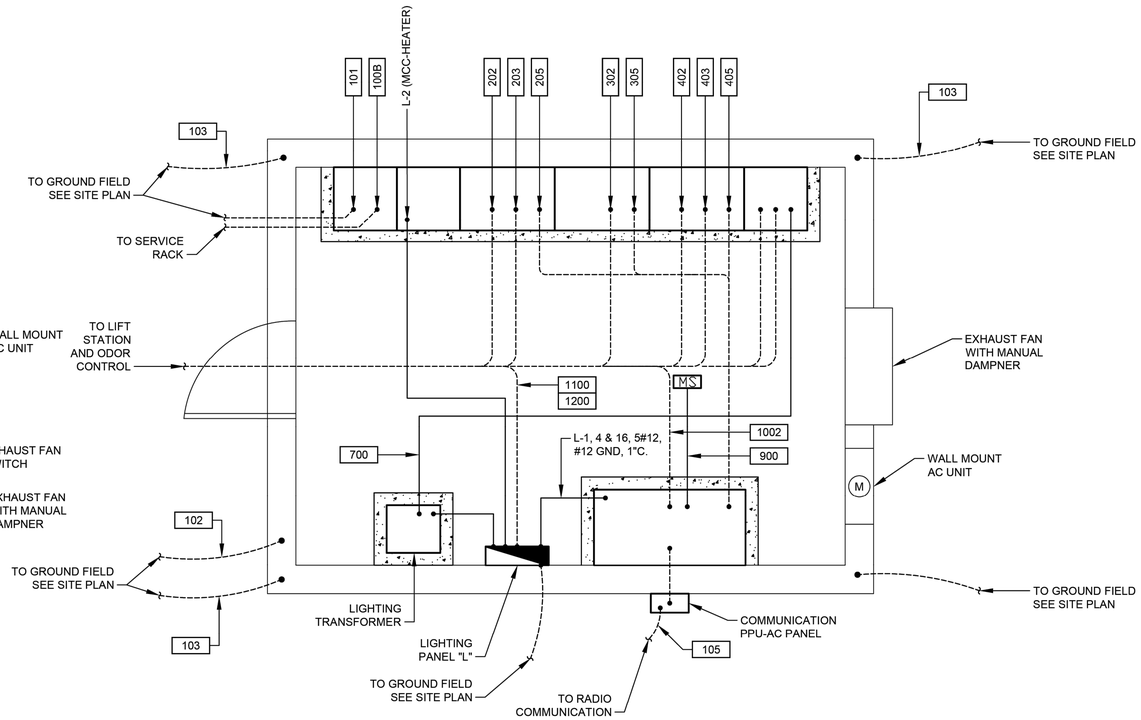

POWER PLAN

1/2"=1'-0"

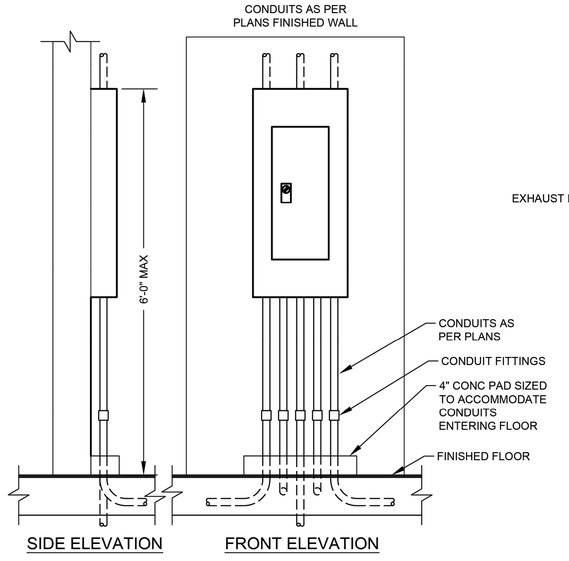

SIDE ELEVATION FRONT ELEVATION

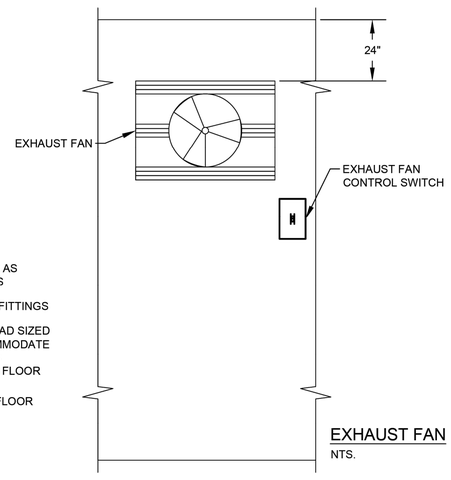

EXHAUST FAN

NTS.

TYPICAL PANEL INSTALLATION

DETAIL 1 / - NTS.

FOR INTERIM REVIEW ONLY NOT INTENDED FOR PERMIT, BIDDING OR CONSTRUCTION PURPOSES.
ENGINEER:
HOSS FOROUZAN
P.E. SERIAL NO.77748
12/15/2025

GAI
Gupta & Associates, Inc.
CONSULTING ENGINEERING
Registration No. F-2593
302 Dennis St.,
Houston, Texas 77006
Tel: 713-636-2936
Fax: 713-636-2987
email: hforouzan@gaiconsulting.com

IDS Engineering Group
13430 NW. Freeway
Suite 700
Houston, Tx. 77040
713.462.3178
TxEng Firm 2726
TxSurv Firm 10110700

CITY OF HOUSTON
HOUSTON PUBLIC WORKS

LIFT STATION RENEWAL AND REPLACEMENT FY 2023

WOODFOREST LIFT STATION CONTROL BUILDING PLAN

WBS NUMBER	FOR CITY OF HOUSTON USE ONLY
R-000267-0179-4	
DRAWING SCALE	
HORIZ: VERT:	
CITY OF HOUSTON PM	
NAWARAJ PANTA, P.E.	
DWG. NO. WDF-E-7	SHEET NO. 256 OF 321

NO.	DATE	REVISION	APP.

FILE PATH: O:\H8108_Lift Station Rehabilitation And Reconstruction (IDS)\6 Drawings\Electrical\Working\Woodforest\H8108_WDF-E-07.dwg

IDS JOB No. 0057-085-00

PLOTTED: 12/11/2025 8:44 PM

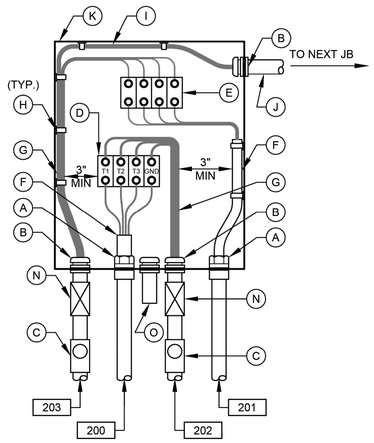

PUMP NO.1
JUNCTION BOX

DETAIL 3
NTS
(SEE NOTE 7)

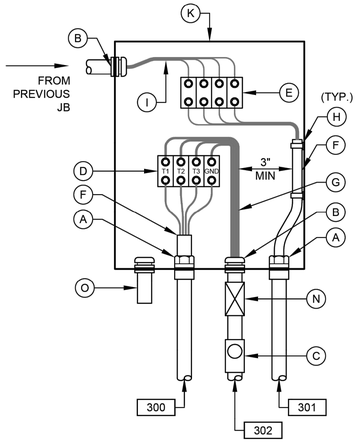

PUMP NO.2
JUNCTION BOX

DETAIL 4
NTS
(SEE NOTE 7)

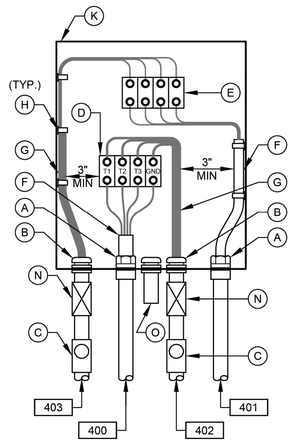

PUMP NO.3
JUNCTION BOX

DETAIL 5
NTS
(SEE NOTE 7)

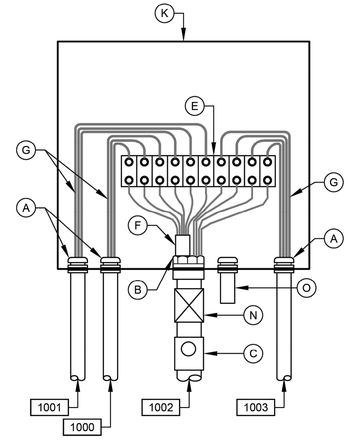

LEVEL TRANSMITTER
JUNCTION BOX

DETAIL 6
NTS
(SEE NOTE 7)

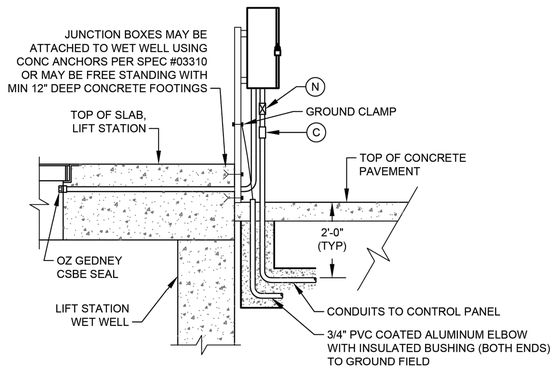

TYP SIDE VIEW FOR DETAIL 1, 2, & 7

(SEE NOTE 10)

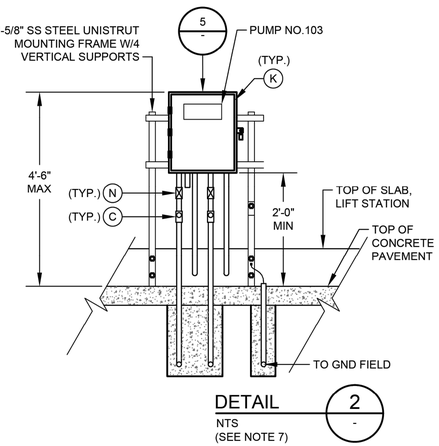

DETAIL 2
NTS
(SEE NOTE 7)

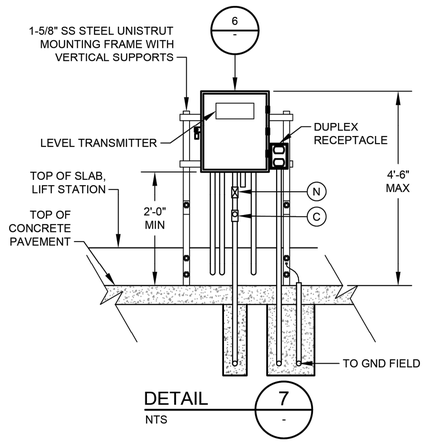

DETAIL 7
NTS

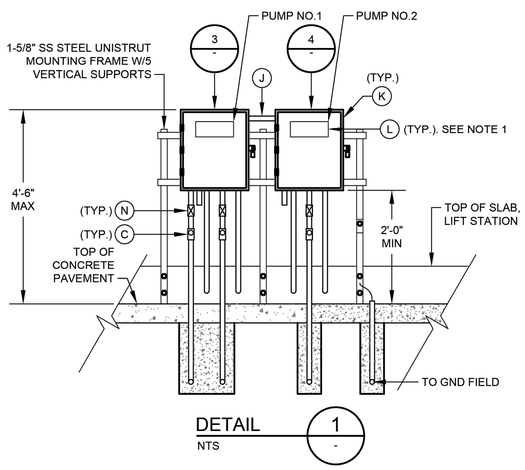

DETAIL 1
NTS

JUNCTION BOX EQUIPMENT SCHEDULE

- A - OZ GEDNEY CSBE SEAL
- B - WATERTIGHT CONDUIT HUB WITH INSULATED BUSHING
- C - CLASS I, DIV 1, EXPLOSION PROOF SEAL INSTALLED PER NEC DIV 501
- D - POWER TERMINAL BLOCK W/SCREW DOWN BOX LUGS
- E - CONTROL TERM BLOCK W/SCREW DOWN BOX LUGS
- F - MULTI-CONDUCTOR CABLE, REMOVE OUTER JACKET AS SHOWN
- G - WIRING AS SCHEDULED
- H - WIRING HARNESS PERMANENTLY AFFIXED
- I - PUMP CONTROL WIRING FROM PUMPS 2; 2 & 3; 4; OR D2, AS APPLICABLE
- J - 1 1/2" PVC COATED CONDUIT NIPPLE
- K - NEMA 6P STAINLESS STEEL JUNCTION BOX MINIMUM SIZE: 12"W X 16"H X 6"D
- L - NAMEPLATE, SEE SPECIFICATIONES (SEE NAMEPLATE SCHEDULE)
- M - MOTOR RATED SWITCH
- N - EXPANSION FITTING
- O - DRAIN VENT

NOTES:

1. NAMEPLATES SHALL BE MOUNTED TO JUNCTION BOXES USING 316 STAINLESS STEEL HARDWARE.
2. MAINTAIN MINIMUM SEPARATION REQUIRED UNDER NEC ARTICLE 504, BETWEEN INTRINSICALLY SAFE CONTROL WIRING AND NON INTRINSICALLY SAFE MOTOR FEEDER WIRING
3. UNLESS OTHERWISE NOTED, ALL EXTERIOR EXPOSED CONDUITS SHALL BE PVC COATED ALUMINUM.
4. UNLESS OTHERWISE NOTED, ALL NUTS, BOLTS, SCREWS WASHERS, ETC SHALL BE TYPE 316 STAINLESS STEEL.
5. ALL UNDERGROUND CONDUITS TO BE ENCASED IN REINFORCED CONCRETE DUCTBANK.
6. PROVIDE ANTI-CORROSIVE SPRAY ON ANY BARE METAL PARTS OR EXPOSED WIRE.
7. SEE WIRING SCHEMATICS FOR TERMINALS AND WIRE NUMBERS.
8. ANY CONDUIT REQUIRING A CSBE SEAL, SHALL BE A MINIMUM SIZE OF 2 1/2" PER CABLE.
9. NOT USED.
10. COORDINATE WITH WASTE WATER OPERATIONS ELECTRICAL ORGANIZATION FOR THE OPENING OF JUNCTION BOXES TO THE SIDE OF WET WELL IF REQUIRED DURING CONSTRUCTION.
11. THE ENCLOSURES WITH ELECTRICAL CIRCUITS SHALL BE A MINIMUM OF 5 FEET FROM ANY CLASSIFIED AREA, OTHERWISE EXPLOSION PROOF TYPE ENCLOSURES SHALL BE USED.

NO.	DATE	REVISION	APP.

FOR INTERIM REVIEW
ONLY NOT INTENDED FOR
PERMIT, BIDDING OR
CONSTRUCTION PURPOSES.
ENGINEER:
HOSS FOROUZAN
P.E. SERIAL NO.77748
12/15/2025

GAI
Gupta & Associates, Inc.
CONSULTING ENGINEERING
Registration No. F-2593
302 Dennis St.,
Houston, Texas 77006
Tel: 713-636-2936
Fax: 713-636-2987
email: hforouzan@gaiconsulting.com

IDS Engineering Group
13430 NW. Freeway
Suite 700
Houston, Tx. 77040
713.462.3178
TxEng Firm 2726
TxSurv Firm 10110700

CITY OF HOUSTON
HOUSTON PUBLIC WORKS

LIFT STATION RENEWAL
AND REPLACEMENT FY 2023

WOODFOREST LIFT STATION JUNCTION BOX DETAILS

WBS NUMBER	FOR CITY OF HOUSTON USE ONLY
R-000267-0179-4	
DRAWING SCALE	
HORIZ: VERT:	
CITY OF HOUSTON PM	
NAWARAJ PANTA, P.E.	

DWG. NO.	SHEET NO. 257 OF 321
WDF-E-8	

IDS JOB No. 0057-085-00

FILE PATH: O:\H8108_Lift Station Rehabilitation And Reconstruction (IDS)\6 Drawings\Electrical\Working\Woodforest\H8108_WDF-E-08.dwg

PLOTTED: 12/11/2025 8:44 PM

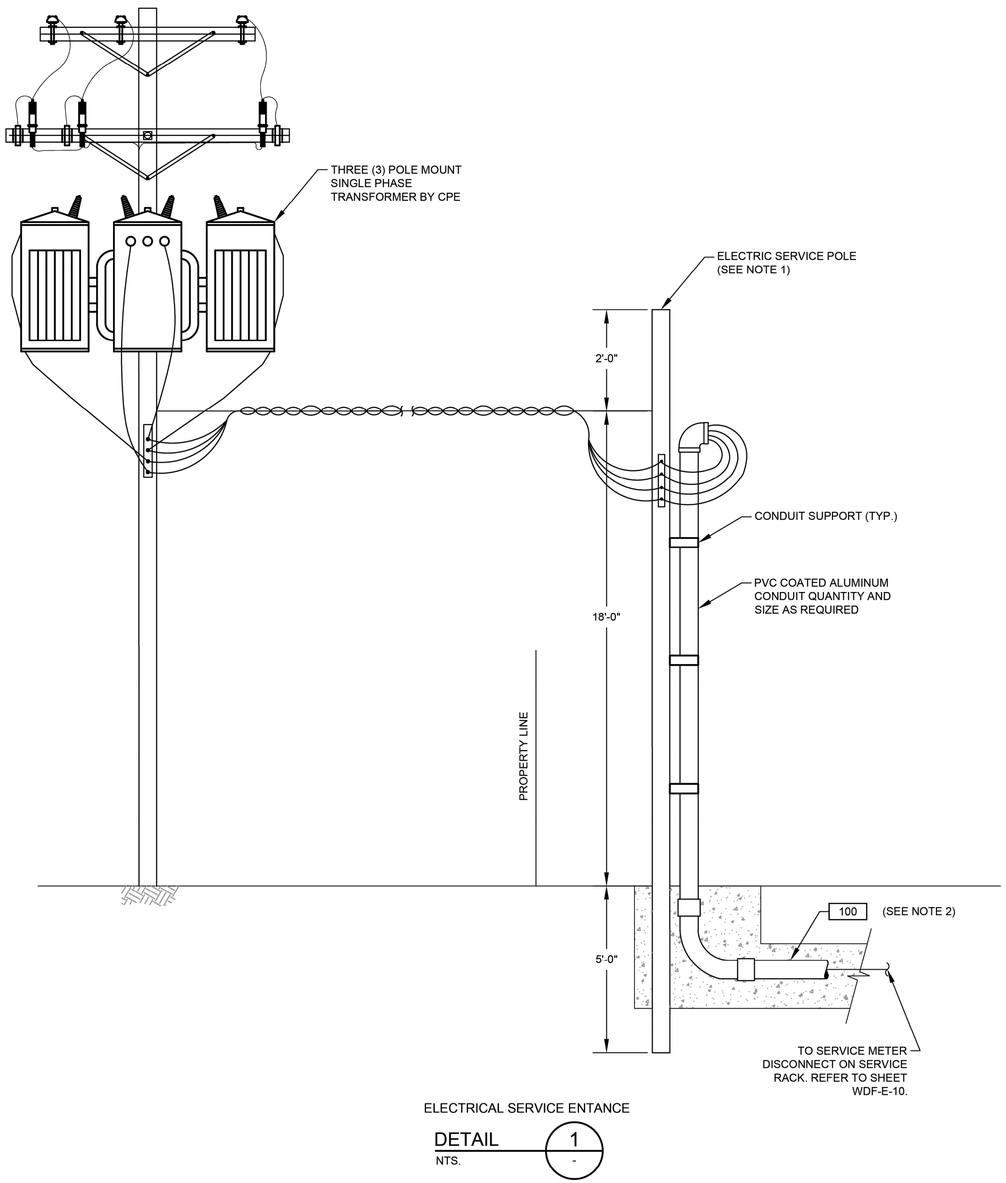

ELECTRICAL SERVICE ENTANCE

DETAIL 1 / NTS. -

NO.	DATE	REVISION	APP.

FOR INTERIM REVIEW
ONLY NOT INTENDED FOR
PERMIT, BIDDING OR
CONSTRUCTION PURPOSES.
ENGINEER:
HOSS FOROUZAN
P.E. SERIAL NO.77748
12/15/2025

GAI
Gupta & Associates, Inc.
CONSULTING ENGINEERING
Registration No. F-2593
302 Dennis St.,
Houston, Texas 77006
Tel: 713-636-2936
Fax: 713-636-2987
email: hforouzan@gaiconsulting.com

IDS Engineering Group
13430 NW. Freeway
Suite 700
Houston, Tx. 77040
713.462.3178
TxEng Firm 2726
TxSurv Firm 10110700

CITY OF HOUSTON
HOUSTON PUBLIC WORKS

LIFT STATION RENEWAL
AND REPLACEMENT FY 2023

WOODFOREST LIFT STATION
SERVICE POLE DETAIL

WBS NUMBER	FOR CITY OF HOUSTON USE ONLY
R-000267-0179-4	
DRAWING SCALE	
HORIZ: VERT:	
CITY OF HOUSTON PM	
NAWARAJ PANTA, P.E.	
SHEET NO. 258 OF 321	

DWG. NO. WDF-E-9

IDS JOB No. 0057-085-00

FILE PATH: O:\H8108_Lift Station Rehabilitation And Reconstruction (IDS)\6 Drawings\Electrical\Working\Woodforest\H8108_WDF-E-09.dwg

PLOTTED: 12/11/2025 8:44 PM

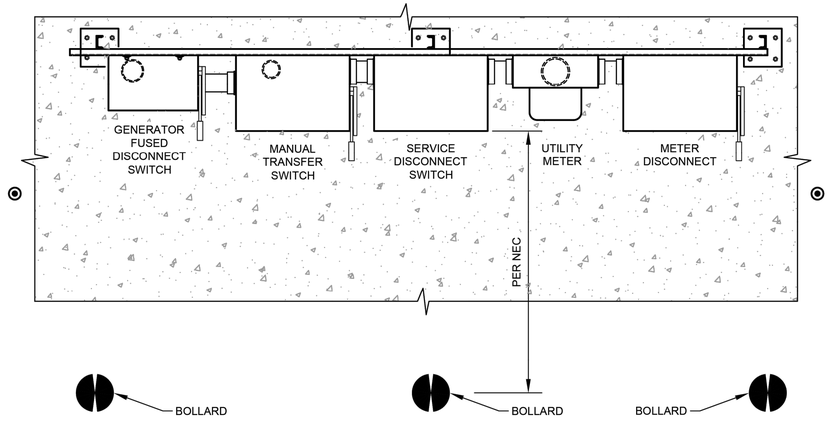

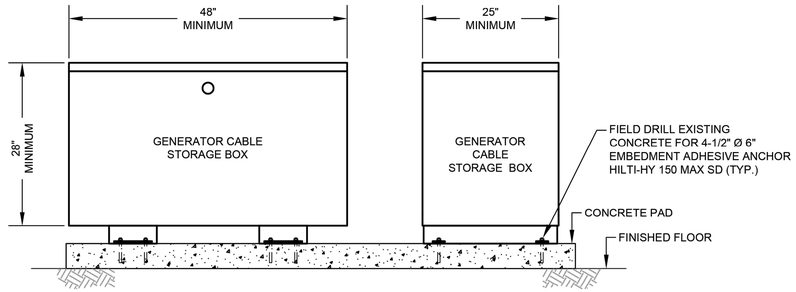

GENERATOR CABLE STORAGE BOX SIDE VIEW

DETAIL 20
NTS. -

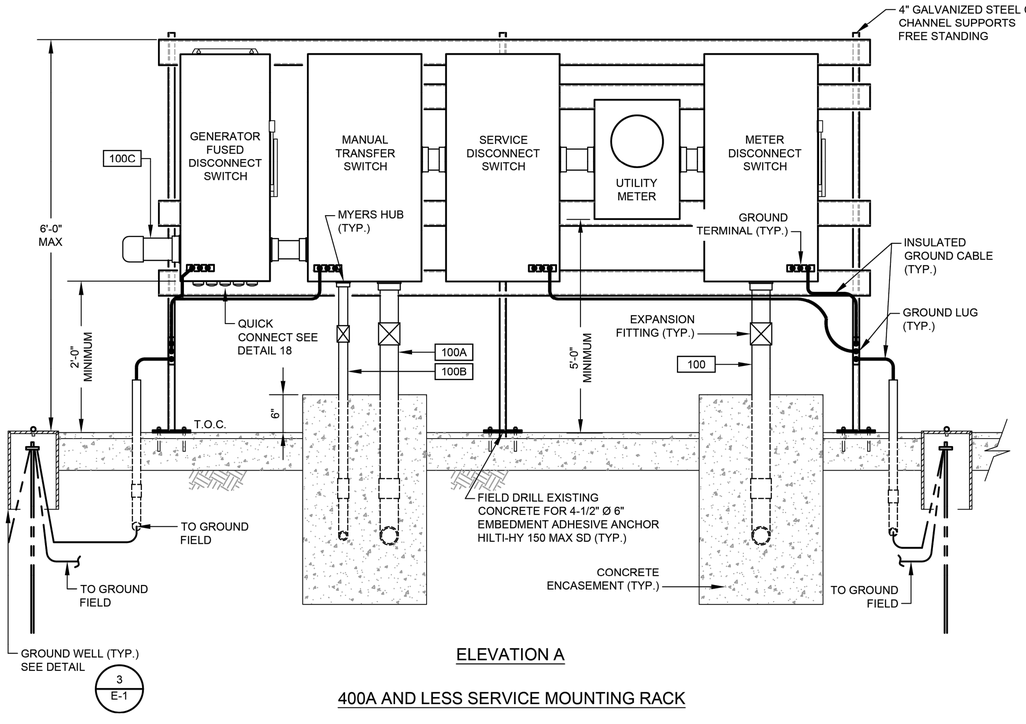

ELEVATION A

400A AND LESS SERVICE MOUNTING RACK

DETAIL 17
NTS. -

ALLOWABLE DEVICE AMPACITY CHART DLO RHW-2 CAM-LOK CONNECTOR CABLE		
CABLE SIZE AWG	AMPS	CABLE LENGTH
#1	220	65 FEET
4/0	400	65 FEET

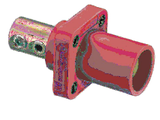

QUICK CONNECT FOR GENERATOR

PHOTOGRAPH 1
NTS. -

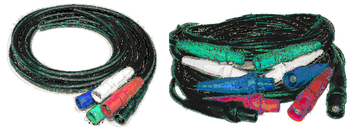

QUICK CONNECT FOR GENERATOR

PHOTOGRAPH 2
NTS. -

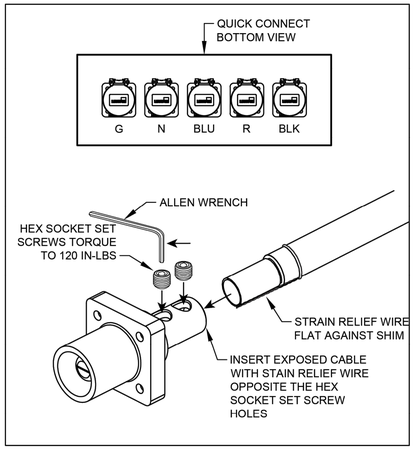

400A AND LESS FEMALE PLUG CABLE TERMINATION

DETAIL 18
NTS. -

REFER TO PHOTO NO.1

NOTES:

1. CONTRACTOR TO INSTALL CONNECTORS AT BOTH ENDS OF CABLE.

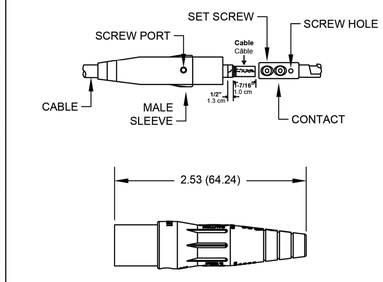

400A AND LESS MALE PLUG CABLE TERMINATION

DETAIL 19
NTS. -

REFER TO PHOTO NO.2

NOTES:

1. CHASE NIPPLE(S) WITH REMOVABLE CAP(S) FOR CONNECTION OF PORTABLE GENERATOR. NOTE: CAP(S) TO BE ATTACHED TO PANEL OR CONDUIT(S) BY STAINLESS STEEL CHAIN.
2. T.O.C DEFINED AS TOP OF PAVEMENT OR TOP OF PANEL ENCLOSURE PEDESTAL WHICHEVER IS HIGHER. (SEE NOTE B).
3. PROVIDE CENTER BOLLARD WHEN SPACE BETWEEN OUTSIDE BOLLARDS IS GREATER THEN 4'-0".

NO.	DATE	REVISION	APP.

FOR INTERIM REVIEW
ONLY NOT INTENDED FOR
PERMIT, BIDDING OR
CONSTRUCTION PURPOSES.
ENGINEER:
HOSS FOROUZAN
P.E. SERIAL NO.77748
12/15/2025

GAI
Gupta & Associates, Inc.
CONSULTING ENGINEERING
Registration No. F-2593
302 Dennis St.,
Houston, Texas 77006
Tel: 713-636-2936
Fax: 713-636-2987
email: hforouzan@gaiconsulting.com

IDS Engineering Group
13430 NW. Freeway
Suite 700
Houston, Tx. 77040
713.462.3178
TxEng Firm 2726
TxSurv Firm 10110700

CITY OF HOUSTON
HOUSTON PUBLIC WORKS

LIFT STATION RENEWAL
AND REPLACEMENT FY 2023

WOODFOREST LIFT STATION SERVICE RACK DETAIL

WBS NUMBER	FOR CITY OF HOUSTON USE ONLY
R-000267-0179-4	
DRAWING SCALE	
HORIZ: VERT:	
CITY OF HOUSTON PM	
NAWARAJ PANTA, P.E.	
SHEET NO. 259 OF 321	

DWG. NO. WDF-E-10

IDS JOB No. 0057-085-00

FILE PATH: O:\H8108_Lift Station Rehabilitation And Reconstruction (IDS)\6 Drawings\Electrical\Working\Woodforest\H8108_WDF-E-10.dwg

	DESCRIPTION	SERVICE		ROUTING			CONDUIT & WIRE SIZE
		VOLTAGE	AMPS OR HP	FROM	TO	VIA	
A	MAIN BONDING JUMPER	--	--	MAIN FUSED DISCONNECT NEUTRAL	MAIN FUSED DISCONNECT GROUND	--	#1/0 CU GND.
B	EQUIPMENT BONDING JUMPER	--	--	MCC/POWER PANEL ENCLOSURE	POWER/CONTROL PANEL & EQUIPMENT	--	#1/0 CU GND.
C	GROUNDED ELECTRODE CONDUCTOR	--	--	GROUNDING ELECTRODE	MAIN SERVICE FUSED DISCONNECT GROUNDING	--	#1/0 CU GND.
100	SERVICE ENTRANCE	480V	600A	UTILITY POWER SERVICE	METER DISCONNECT		2 SETS OF 3#350 MCM., #2 NEUT. #2 GND., 3" C. EA.
100A	SERVICE POWER	480V	600A	SERVICE DISCONNECT	MANUAL TRANSFER SWTICH	--	2 SETS OF 3#350 MCM., #2 NEUT. #2 GND., 3" C. EA.
100B	MCC SERVICE POWER	480V	600A	MANUAL TRANSFER SWITCH	MAIN BREAKER IN MCC	--	2 SETS OF 3#350 MCM., #2 NEUT. #2 GND., 3" C. EA.
100C	NORMAL/EMERGENCY POWER STATUS	24VDC	--	MANUAL TRANSFER SWITCH	CONTROL PANEL	--	4 #14 AWG., 1"C.
100D	EMERGENCY POWER	480V	600A	GENERATOR DISCONNECT	MANUAL TRANSFER SWITCH	--	2 SETS OF 3#350 MCM., #2 NEUT. #2 GND., 3" C. EA.
101	GROUND ELECTRODE CONDUCTOR	--	--	MCC ENCLOSURE	GROUND FIELD	--	#4/0 GND.
102	GROUND ELECTRODE CONDUCTOR	--	--	BUILDING STEEL	GROUND FIELD	--	#4/0 GND.
103	BUILDING GROUNDING	--	--	BUILDING REBAR	LIGHTNING GROUND ROD	--	#4/0 GND.
104	GROUND ELECTRODE CONDUCTOR	--	--	CONTROL PANEL	GROUND FIELD	--	#2/0 GND.
105	COMMUNICATION	--	--	COMMUNICATION POLE	CONTROL PANEL	--	1-1/2"C. CAT 5E
200	PUMP NO. 1 POWER	480V	85 HP	PUMP NO. 1	PUMP NO. 1 JUNCTION BOX	--	MANUFACTURER CABLE IN 3-1/2"C.
201	PUMP NO. 1 CONTROLS	120V	--	PUMP NO. 1	PUMP NO. 1 JUNCTION BOX	--	MANUFACTURER CABLE IN 3-1/2"C.
202	PUMP NO. 1 POWER	480V	85 HP	PUMP NO. 1 JUNCTION BOX	PUMP STARTER	--	3#1 AWG., #6 GND., 2"C.
203	COMBINED PUMP CONTROLS	120V	--	PUMP NO. 1 JUNCTION BOX	PUMP STARTER	COMBINE PUMP 1 & 2 CONTROLS	COMBINE 200 & 300 TAG WIRING, 8#14, 1"C.
205	PUMP NO. 1 CONTROLS	120V	--	STARTER IN MOTOR CONTROL CENTER	CONTROL PANEL	--	12#14 AWG., 3/4"C.
300	PUMP NO. 2 POWER	480V	85 HP	PUMP NO. 2	PUMP NO. 2 JUNCTION BOX	--	MANUFACTURER CABLE IN 3-1/2"C.
301	PUMP NO. 2 CONTROLS	120V	--	PUMP NO. 2	PUMP NO. 2 JUNCTION BOX	--	MANUFACTURER CABLE IN 3-1/2"C.
302	PUMP NO. 2 POWER	480V	85 HP	PUMP NO. 2 JUNCTION BOX	PUMP STARTER	--	3#1 AWG., #6 GND., 2"C.
305	PUMP NO. 2 CONTROLS	120V	--	STARTER IN MOTOR CONTROL CENTER	CONTROL PANEL	--	12#14 AWG., 3/4"C.
400	PUMP NO. 3 POWER	480V	85 HP	PUMP NO. 3	PUMP NO. 3 JUNCTION BOX	--	MANUFACTURER CABLE IN 3-1/2"C.
401	PUMP NO. 3 CONTROLS	120V	--	PUMP NO. 3	PUMP NO. 3 JUNCTION BOX	--	MANUFACTURER CABLE IN 3-1/2"C.
402	PUMP NO. 3 POWER	480V	85 HP	PUMP NO. 3 JUNCTION BOX	PUMP STARTER	--	3#1 AWG., #6 GND., 2"C.
403	COMBINED PUMP CONTROLS	120V	-	PUMP NO. 3 JUNCTION BOX	CONTROL PANEL	--	4#14 AWG., 1"C.
405	PUMP NO. 3 CONTROLS	120V	--	STARTER IN MOTOR CONTROL CENTER	CONTROL PANEL	--	12#14 AWG., 1"C.
700	LIGHTING PANEL FEEDER	480V	40A	MOTOR CONTROL CENTER	LIGHTING TRANSFORMER	--	2#6 AWG., #6 GND., 1"C.
701	LIGHTING PANEL GROUND	--	--	LIGHTING PANEL	GROUND FIELD	--	#8 GND., 1"C.
702	LIGHTING PANEL FEEDER	120/240V	--	LIGHTING TRANSFORMER	LIGHTING PANEL	--	3#4 AWG., #6 GND., 1-1/4" C.
900	INTRUSION ALARM	24VDC	--	MOTION SWITCH	CONTROL PANEL	--	2#14 AWG., 3/4" C.
1000	LEVEL TRANSMITTER	24VDC	--	TRANSMITTER JUNCTION BOX	TRANSMITTER JUNCTION BOX	--	MANUFACTURER'S CABLE IN 2-1/2"C
1001	LEVEL TRANSMITTER	24VDC	--	TRANSMITTER JUNCTION BOX	TRANSMITTER JUNCTION BOX	--	MANUFACTURER'S CABLE IN 2-1/2"C
1002	COMBINED LEVEL TRANSMITTERS & FLOAT SWITCH	24VDC	--	CONTROL PANEL	TRANSMITTER JUNCTION BOX	--	2-TRI, 4#14, 2" C.
1003	WELL FLOAT SWITCHES	24VDC	--	TRANSMITTER JUNCTION BOX	FLOAT SWITCH NO.1 & NO.2	--	MANUFACTURER'S CABLE IN 2-1/2"C
1100	120VAC FOR RECEPTACLE	-	--	LIGHTING PANEL	RECEPTACLE NEXT TO TRANSMITTER J-BOX	--	2#12 AWG., #12 GND., 1" C.
1200	120VAC FOR RECEPTACLE	-	--	LIGHTING PANEL	RECEPTACLE NEXT TO PUMP NO.2 J-BOX	--	2#12 AWG., #12 GND., 1" C.
1300	SITE LIGHTING	120VAC	--	LIGHTING PANEL	SITE LIGHTS	VIA SITE LIGHTING SWITCH	2#12 AWG., #12 GND., 1" C.

NO.	DATE	REVISION	APP.

FOR INTERIM REVIEW
ONLY NOT INTENDED FOR
PERMIT, BIDDING OR
CONSTRUCTION PURPOSES.
ENGINEER:
HOSS FOROUZAN
P.E. SERIAL NO.77748
12/15/2025

GAI
Gupta & Associates, Inc.
CONSULTING ENGINEERING
Registration No. F-2593
302 Dennis St.,
Houston, Texas 77006
Tel: 713-636-2936
Fax: 713-636-2987
email: hforouzan@gaiconsulting.com

IDS Engineering Group
13430 NW. Freeway
Suite 700
Houston, Tx. 77040
713.462.3178
TxEng Firm 2726
TxSurv Firm 10110700

CITY OF HOUSTON
HOUSTON PUBLIC WORKS

LIFT STATION RENEWAL
AND REPLACEMENT FY 2023

WOODFOREST LIFT STATION CONDUIT SCHEDULE

WBS NUMBER	FOR CITY OF HOUSTON USE ONLY
R-000267-0179-4	
DRAWING SCALE	
HORIZ: VERT:	
CITY OF HOUSTON PM	
NAWARAJ PANTA, P.E.	
SHEET NO. 260 OF 321	

DWG. NO. WDF-E-11

IDS JOB No. 0057-085-00

PLOTTED: 12/11/2025 8:44 PM

FILE PATH: O:\H8108_Lift Station Rehabilitation And Reconstruction (IDS)\6 Drawings\Electrical\Working\Woodforest\H8108_WDF-E-11.dwg

PLOTTED: 12/11/2025 8:07 PM

HMI

INFLUENT PUMP NO. 1

SPEED CTRL.	SPEED IND.	IN VFD	SEAL FAIL ALARM	MOTOR OVERLOAD ALARM	MOTOR CURRENT	HIGH TEMP ALARM	IN HAND	IN AUTO	ON/OFF	START/ STOP
SC 1	SI 1	IS 1	MA 1	MO 1	II 1	TH 1	HI 1	IA 1	YFS 1	YCS 1

INFLUENT PUMP NO. 2

SPEED CTRL.	SPEED IND.	IN VFD	SEAL FAIL ALARM	MOTOR OVERLOAD ALARM	MOTOR CURRENT	HIGH TEMP ALARM	IN HAND	IN AUTO	ON/OFF	START/ STOP
SC 2	SI 2	IS 2	MA 2	MO 2	II 2	TH 2	HI 2	IA 2	YFS 2	YCS 2

INFLUENT PUMP NO. 3

SPEED CTRL.	SPEED IND.	IN VFD	SEAL FAIL ALARM	MOTOR OVERLOAD ALARM	MOTOR CURRENT	HIGH TEMP ALARM	IN HAND	IN AUTO	ON/OFF	START/ STOP
SC 3	SI 3	IS 3	MA 3	MO 3	II 3	TH 3	HI 3	IA 3	YFS 3	YCS 3

ALARMS RESET	PRIMARY PLC FLOAT HIGH-HIGH WETWELL LEVEL	BACKUP PLC PUMP NO. 1 START/ STOP	PUMP NO. 2 START/ STOP	PUMP NO. 3 START/ STOP
RE 1	LAHH 1A	YCS 1A	YCS 2A	YCS 3A

CONTROL PANEL PLC

CONTROL PANEL

480V → INFLUENT PUMPS MCC

INFLUENT PUMP NO. 1 — H/O/A, RUN

INFLUENT PUMP NO. 2 — H/O/A, RUN

INFLUENT PUMP NO. 3 — H/O/A, RUN

PRIMARY PLC (G)

BACKUP PLC (G)

INFLUENT PUMP CONTROL PANEL

ALARMS RESET

OIT

TO SHEET WDF-I-2

WDF-I-2

WDF-I-2

WET WELL

LT 1

LE 1

LT 2

LE 2

LSH 1A

TSH 1A

FS2 HIGH-HIGH LEVEL FLOAT SWITCH

LSH 2A

TSH 2A

LSH 3A

TSH 3A

FS1 HIGH LEVEL FLOAT SWITCH

M

INFLUENT DISCHARGE

NO.	DATE	REVISION	APP.

FOR INTERIM REVIEW
ONLY NOT INTENDED FOR
PERMIT, BIDDING OR
CONSTRUCTION PURPOSES.
ENGINEER:
HOSS FOROUZAN
P.E. SERIAL NO.77748
12/15/2025

GAI
Gupta & Associates, Inc.
CONSULTING ENGINEERING
Registration No. F-2593
302 Dennis St.,
Houston, Texas 77006
Tel: 713-636-2936
Fax: 713-636-2987
email: hforouzan@gaiconsulting.com

IDS Engineering Group
13430 NW. Freeway
Suite 700
Houston, Tx. 77040
713.462.3178
TxEng Firm 2726
TxSurv Firm 10110700

CITY OF HOUSTON
HOUSTON PUBLIC WORKS

LIFT STATION RENEWAL
AND REPLACEMENT FY 2023

WOODFOREST LIFT STATION
P&ID DIAGRAM–I

WBS NUMBER	FOR CITY OF HOUSTON USE ONLY
R-000267-0179-4	
DRAWING SCALE	
HORIZ: VERT:	
CITY OF HOUSTON PM	
NAWARAJ PANTA, P.E.	

DWG. NO.	SHEET NO. 261 OF 321
WDF–I–1	

IDS JOB No. 0057-085-00

FILE PATH: O:\H8108_Lift Station Rehabilitation And Reconstruction (IDS)\6 Drawings\Instrumentation And Control\Working\WoodForest\H8108_WDF–I–01.dwg

PLOTTED: 12/11/2025 8:07 PM

HMI

CONTROL PANEL PLC

CONTROL PANEL

	BACKUP PLC			PRIMARY PLC									BACKUP PLC								
	FLOAT HIGH-HIGH WETWELL LEVEL	PRIMARY PLC PHASE FAILURE UNDERVOLTAGE	BACKUP PLC PHASE FAILURE UNDERVOLTAGE	PRIMARY LEVEL TRANSMITTER			BACKUP LEVEL TRANSMITTER			HIGH LEVEL ALARM	PRIMARY PLC MODE ACTIVE	BACKUP PLC MODE ACTIVE	INSTRUSION ALARM	PRIMARY LEVEL TRANSMITTER			BACKUP LEVEL TRANSMITTER			MTS IN NORMAL SOURCE	MTS IN GENERATOR SOURCE	ALARMS RESET
				HIGH LEVEL	LEVEL INDICATION	LOW LEVEL	HIGH LEVEL	LEVEL INDICATION	LOW LEVEL					HIGH LEVEL	LEVEL INDICATION	LOW LEVEL	HIGH LEVEL	LEVEL INDICATION	LOW LEVEL			
	LAHH 1B	JA 1	JA 2	LAH 1	LI 1	LAL 1	LAH 2	LI 2	LAL 2	LAH 1B	YI 1A	YI 1B	YA 1	LAH 1A	LI 1A	LAL 1A	LAH 2A	LI 2A	LAL 2A	ZI 1A	ZI 1B	RE 2

CONTROL PANEL

FROM SHEET WDF-I-1

FROM SHEET WDF-I-14

WDF-I-1

WDF-I-1

NO.	DATE	REVISION	APP.

FOR INTERIM REVIEW
ONLY NOT INTENDED FOR
PERMIT, BIDDING OR
CONSTRUCTION PURPOSES.
ENGINEER:
HOSS FOROUZAN
P.E. SERIAL NO.77748
12/15/2025

GAI
Gupta & Associates, Inc.
CONSULTING ENGINEERING
Registration No. F-2593
302 Dennis St.,
Houston, Texas 77006
Tel: 713-636-2936
Fax: 713-636-2987
email: hforouzan@gaiconsulting.com

IDS Engineering Group
13430 NW. Freeway
Suite 700
Houston, Tx. 77040
713.462.3178
TxEng Firm 2726
TxSurv Firm 10110700

CITY OF HOUSTON
HOUSTON PUBLIC WORKS

LIFT STATION RENEWAL
AND REPLACEMENT FY 2023

WOODFOREST LIFT STATION
P&ID DIAGRAM—II

WBS NUMBER	FOR CITY OF HOUSTON USE ONLY
R-000267-0179-4	
DRAWING SCALE	
HORIZ: VERT:	
CITY OF HOUSTON PM	
NAWARAJ PANTA, P.E.	
SHEET NO. 262 OF 321	

DWG. NO. WDF—I—2

IDS JOB No. 0057-085-00

FILE PATH: O:\H8108_Lift Station Rehabilitation And Reconstruction (IDS)\6 Drawings\Instrumentation And Control\1Working\WoodForest\H8108_WDF—I—02.dwg

PLOTTED: 12/11/2025 8:07 PM

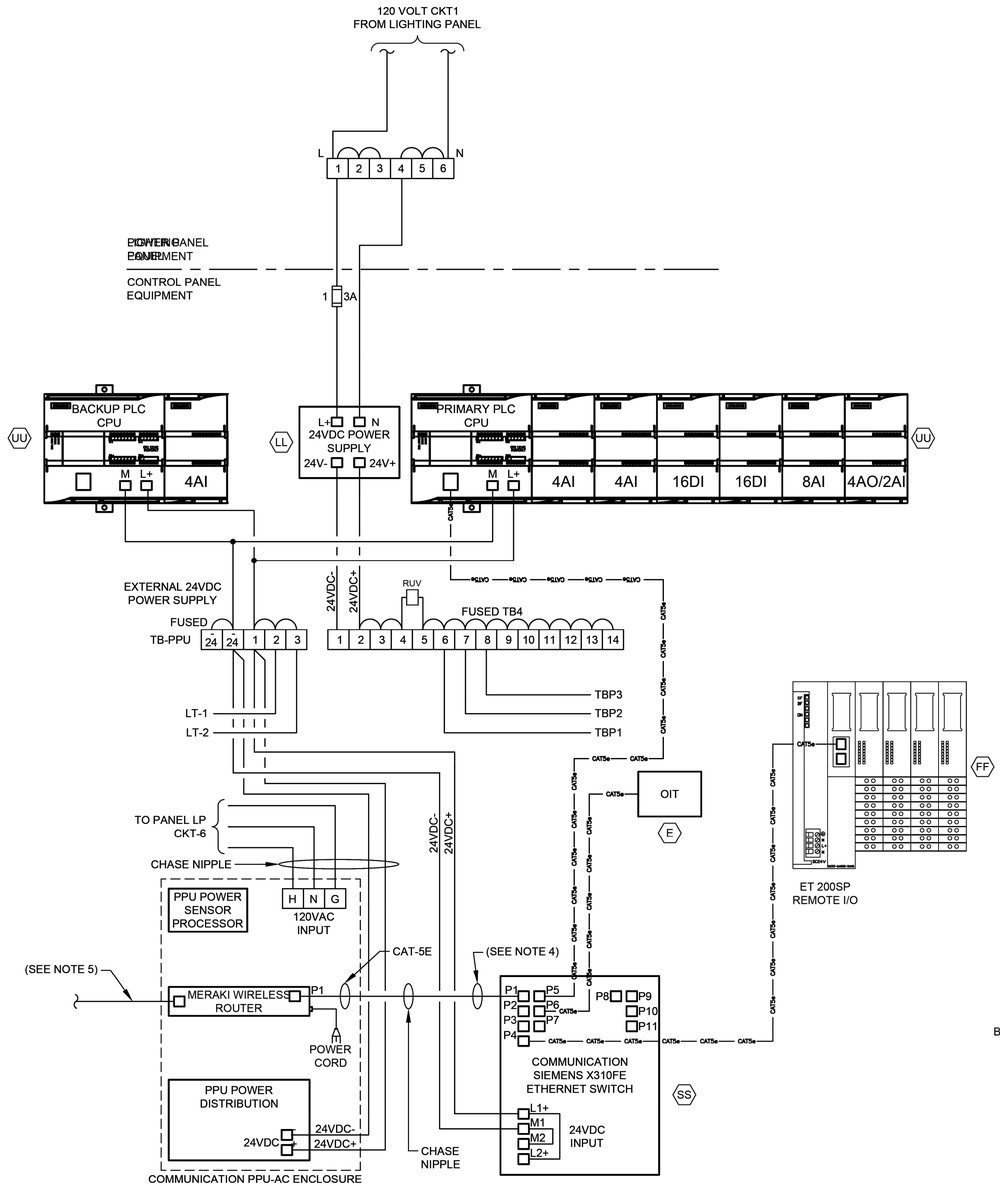

CONTROL POWER & COMMUNICATIONS WIRING

DIAGRAM

NTS

(SEE NOTE 2 & 6)

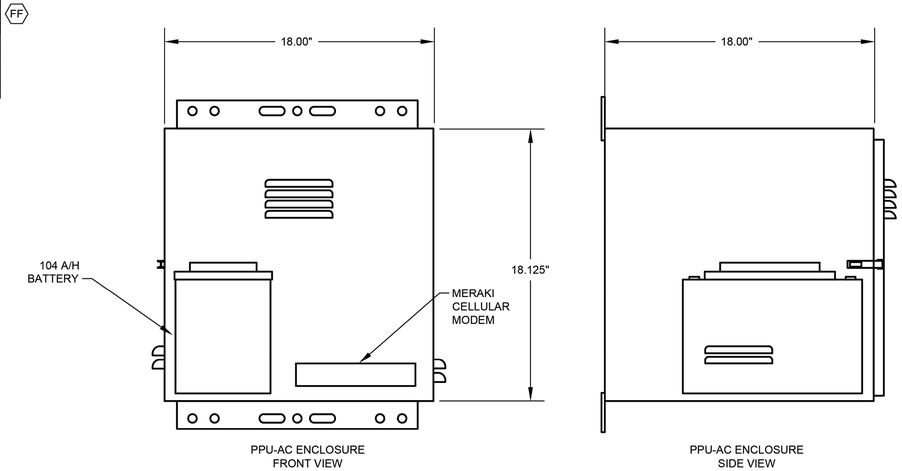

PPU-AC ENCLOSURE FRONT VIEW

PPU-AC ENCLOSURE SIDE VIEW

PPU-AC CONTROL ENCLOSURE

ELEVATION

NTS

(SEE NOTE 7)

NOTES:

1. FOR DESCRIPTION AND RATINGS OF ITEMS INDICATED WITH ITEM TAG, SEE DEVICE RATINGS SCHEDULE.
2. REFER TO SPEC SECTION 16120 FOR CONDUCTOR COLOR CODE.
3. THE PLC POWER SUPPLY SHALL FEED THE 24VDC I/O.
4. ETHERNET CABLE FOR MERAKI CELLULAR ROUTER (P1).
5. POE CABLE TO RADIO.
6. COMMUNICATION PPU-AC & SCADA SHALL BE PROVIDED BY CONTRACTOR INCLUDING TO RUN CONDUITS & WIRES.
7. COORDINATE WITH VENDOR TO PROVIDE PROPER VENTILATION WHERE APPLICABLE.

GENERAL NOTES:

1. NO ELECTRICAL MATERIAL, APPARATUS, DEVICES, APPLIANCES, FIXTURES, OR EQUIPMENT SHALL BE SOLD OR INSTALLED IN THE CITY UNLESS THEY ARE IN CONFORMANCE WITH THE PROVISIONS OF SECTION 508 CITY OF HOUSTON ELECTRICAL CODE, THE LAWS OF THE STATE OF TEXAS AND ANY APPLICABLE RULES AND REGULATIONS ISSUED UNDER THE AUTHORITY OF THE STATE STATUES. THE MAKER'S NAME, TRADEMARK, OR OTHER IDENTIFICATION SYMBOL SHALL BE PLACED ON ALL ELECTRICAL MATERIALS, APPARATUS, DEVICES, APPLIANCES, FIXTURES, AND EQUIPMENT USED OR INSTALLED UNDER THE PROVISIONS OF THIS CODE. ALL ELECTRICAL MATERIALS AND EQUIPMENT SHALL BE LISTED AND LABELED FOR THE INTENDED USE AND SHALL BE INCLUDED IN A LIST PUBLISHED BY AN APPROVAL AGENCY.

NO.	DATE	REVISION	APP.

FOR INTERIM REVIEW
ONLY NOT INTENDED FOR
PERMIT, BIDDING OR
CONSTRUCTION PURPOSES.
ENGINEER:
HOSS FOROUZAN
P.E. SERIAL NO.77748
12/15/2025

GAI
Gupta & Associates, Inc.
CONSULTING ENGINEERING
Registration No. F-2593
302 Dennis St.,
Houston, Texas 77006
Tel: 713-636-2916
Fax: 713-636-2987
email: hforouzan@gaiconsulting.com

IDS Engineering Group
13430 NW. Freeway
Suite 700
Houston, Tx. 77040
713.462.3178
TxEng Firm 2726
TxSurv Firm 10110700

CITY OF HOUSTON
HOUSTON PUBLIC WORKS

LIFT STATION RENEWAL AND REPLACEMENT FY 2023

WOODFOREST LIFT STATION COMMUNICATION DIAGRAM

WBS NUMBER	FOR CITY OF HOUSTON USE ONLY
R-000267-0179-4	
DRAWING SCALE	
HORIZ: VERT:	
CITY OF HOUSTON PM	
NAWARAJ PANTA, P.E.	
DWG. NO. WDF-I-3	SHEET NO. 263 OF 321

IDS JOB No. 0057-085-00

FILE PATH: O:\H8108_Lift Station Rehabilitation And Reconstruction (IDS)\6 Drawings\Instrumentation And Control\Working\WoodForest\H8108_WDF-I-03.dwg

PLOTTED: 12/11/2025 8:07 PM

EQUIPMENT AND DEVICE SCHEDULE

ITEM	QUANTITY	DESCRIPTION
A	1	SINGLE CHANNEL INTRINSICALLY SAFE RELAY
B	2	ANALOG SIGNAL ISOLATOR
C	4	PUMP PROTECTION MODULE
D	*	NOT USED
E	4	HAND-OFF-AUTO SWITCH, 3 POSITION, HEAVY-DUTY OIL TIGHT WITH 2 SETS OF CONTACT BLOCKS (PUMP CONTROL)
F	4	INDICATING LIGHT, HEAVY DUTY, OILTIGHT, RED, 24 VDC, LED, WITH "RUN" LEGEND
G	*	NOT USED.
H	1	SWITCH FOR CABINET LIGHT, 120V, 20A, SPST
I	2	DUPLEX RECEPTACLE, 120V, 20A, 2 WIRE, GROUNDED, GFCI TYPE
J	1	24" LED STRIP LIGHT 120V SUITABLE FOR ZERO DEGREE OPERATION
K	*	NAMEPLATES, SEE SPECIFICATIONS (SEE NAMEPLATE SCHEDULE)
L	2	PROGRAMMABLE LOGIC CONTROLLER WITH EXPANSION UNIT
M	*	CONTROL RELAY 24VDC RELAY WITH THREE FORM C CONTACTS AND 11 PIN SOCKET BASE
N	-	NOT USED
O	-	NOT USED
P	1	NEMA 12 GASKETED STEEL ENCLOSURES WITHOUT VENTS 72" H X 20" D X 48" W
Q	*	TERMINAL BLOCK
R	1	WIRE DUCT 2" WIDE X 2" DEEP MINIMUM
S	1	GROUND BUS
T	1	COMMUNICATION ETHERNET SWITCH
U	9	CARTRIDGE
V	1	PUSHBUTTON, BLACK WITH RESET LEGEND
W	-	NOT USED
X	*	FUSED TERMINAL BLOCKS
Y	1	POWER SURGE PROTECTOR - CONTROL POWER
Z	1	PROGRAMMING SCREEN (OIT)
AA	*	120VAC SYSTEM FUSES
BB	1	120VAC - 24VDC POWER SUPPLY, 5A
CC	*	NOT USED
DD	2	INDICATING LIGHT, HEAVY DUTY, OILTIGHT, GREEN, 24VDC, LED WITH "BACKUP PLC" & "PRIMARY PLC" LEGEND
EE	2	ANALOG I/O SURGE SUPPRESSOR
FF	1	REMOTE I/O WITH EXPANSION UNIT

* - AS SCHEDULED

NAMEPLATE SCHEDULE

DESIGNATION	ENGRAVED
N1	PUMP STATION DESIGNATION
N2	PUMP NO. 1
N3	PUMP NO. 2
N4	PUMP NO. 3
N5	PUMP NO. 4
N6	NOT USED.
N7	NOT USED.
N8	NOT USED.
N9	NOT USED.
N10	PROGRAMMING SCREEN
N11	NOT USED.
N12	PRIMARY PLC
N13	BACKUP PLC
N14	MOTOR DATA

HORSEPOWER (OUTPUT) ----------
RPM AT FULL LOAD ----------
TIME RATING ----------
FREQUENCY ----------
NUMBER OF PHASES ----------
MODEL NUMBER ----------
RATED VOLTAGE ----------
SERVICE FACTOR ----------
FULL LOAD AMPS ----------
INSULATION CLASS ----------
NEMA DESIGN LETTER ----------
TEMPERATURE RISE ----------
NEMA FRAME SIZE ----------
DATE OF MANUFACTURE ----------
THERMO PROTECTION (IF REQUIRED) --
MOISTURE PROTECTION (IF REQUIRED)-

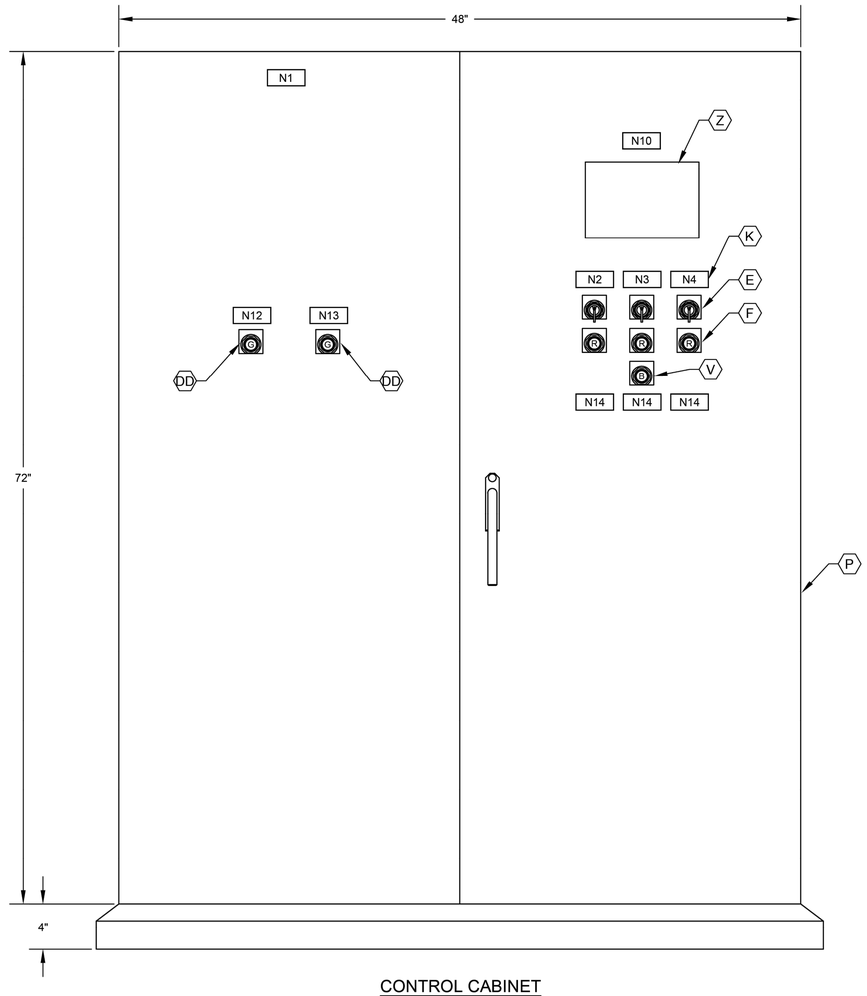

CONTROL CABINET
FRONT DOOR ELEVATION

NOTES:

1. NAMEPLATES SHALL BE MOUNTED TO PANELS USING STAINLESS STEEL HARDWARE.
2. REFER SPECIFICATIONS FOR ALL PANEL COMPONENTS.

GENERAL NOTES:

1. NO ELECTRICAL MATERIAL, APPARATUS, DEVICES, APPLIANCES, FIXTURES, OR EQUIPMENT SHALL BE SOLD OR INSTALLED IN THE CITY UNLESS THEY ARE IN CONFORMANCE WITH THE PROVISIONS OF SECTION 508 CITY OF HOUSTON ELECTRICAL CODE, THE LAWS OF THE STATE OF TEXAS AND ANY APPLICABLE RULES AND REGULATIONS ISSUED UNDER THE AUTHORITY OF THE STATE STATUES. THE MAKER'S NAME, TRADEMARK, OR OTHER IDENTIFICATION SYMBOL SHALL BE PLACED ON ALL ELECTRICAL MATERIALS, APPARATUS, DEVICES, APPLIANCES, FIXTURES, AND EQUIPMENT USED OR INSTALLED UNDER THE PROVISIONS OF THIS CODE. ALL ELECTRICAL MATERIALS AND EQUIPMENT SHALL BE LISTED AND LABELED FOR THE INTENDED USE AND SHALL BE INCLUDED IN A LIST PUBLISHED BY AN APPROVAL AGENCY.

NO.	DATE	REVISION	APP.

FOR INTERIM REVIEW
ONLY NOT INTENDED FOR
PERMIT, BIDDING OR
CONSTRUCTION PURPOSES.
ENGINEER:
HOSS FOROUZAN
P.E. SERIAL NO.77748
12/15/2025

GAI
Gupta & Associates, Inc.
CONSULTING ENGINEERING
Registration No. F-2593
302 Dennis St.,
Houston, Texas 77006
Tel: 713-636-2936
Fax: 713-636-2987
email: hforouzan@gaiconsulting.com

IDS Engineering Group
13430 NW. Freeway
Suite 700
Houston, Tx. 77040
713.462.3178
TxEng Firm 2726
TxSurv Firm 10110700

CITY OF HOUSTON
HOUSTON PUBLIC WORKS

LIFT STATION RENEWAL
AND REPLACEMENT FY 2023

WOODFOREST LIFT STATION CONTROL CABINET EQUIP. LAYOUT & SCHEDULE

WBS NUMBER	FOR CITY OF HOUSTON USE ONLY
R-000267-0179-4	
DRAWING SCALE	
HORIZ: VERT:	
CITY OF HOUSTON PM	
NAWARAJ PANTA, P.E.	

DWG. NO.	SHEET NO.
WDF-I-4	264 OF 321

IDS JOB No. 0057-085-00

FILE PATH: O:\H8108_Lift Station Rehabilitation And Reconstruction (IDS)\6 Drawings\Instrumentation And Control\1Working\WoodForest\H8108_WDF-I-04.dwg

PLOTTED: 12/11/2025 8:07 PM

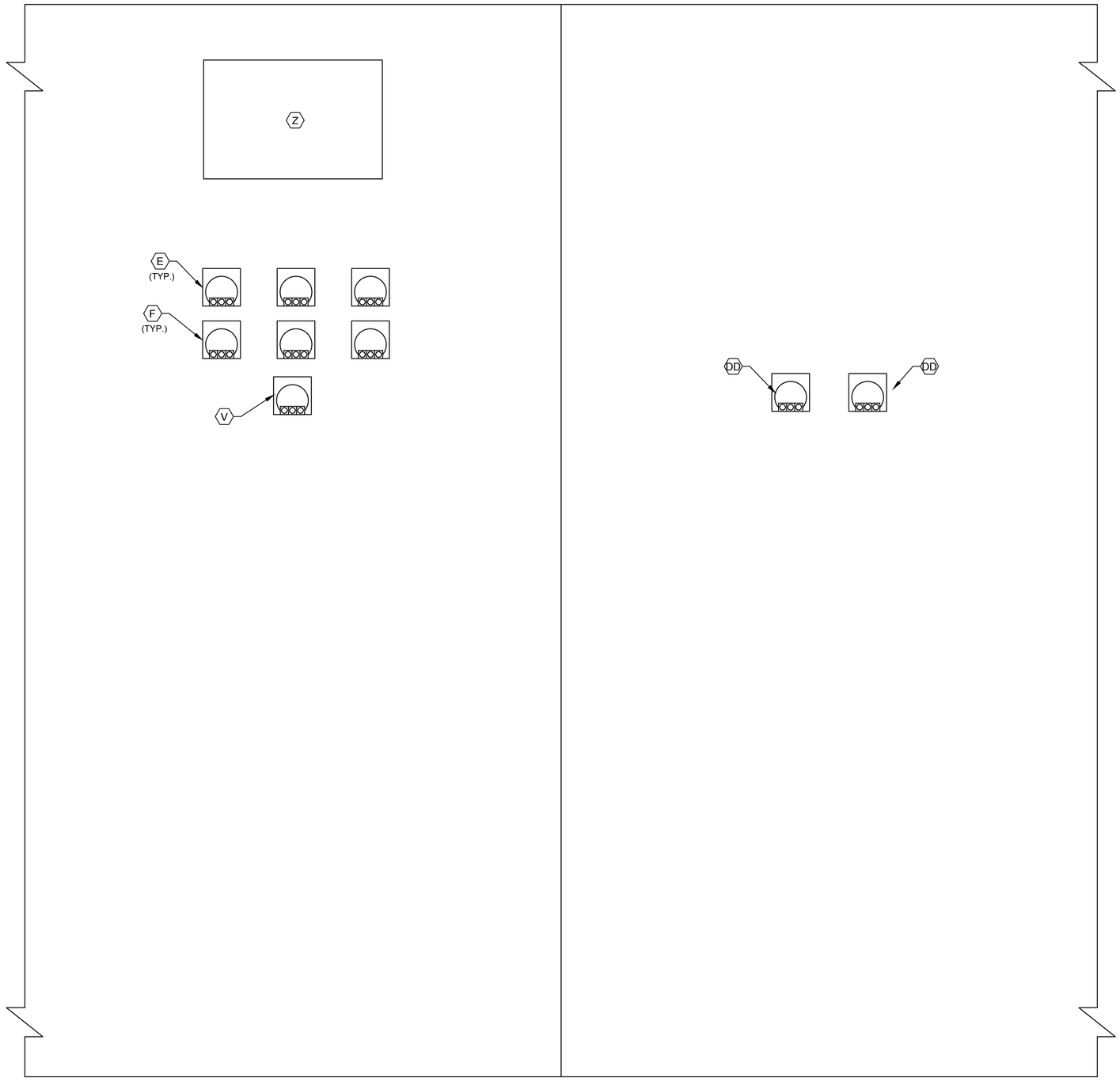

CONTROL CABINET
BACK DOOR ELEVATION

NOTES:

1. SEE SHEET WDF-I-4 FOR EQUIPMENT SCHEDULE.

GENERAL NOTES:

1. NO ELECTRICAL MATERIAL, APPARATUS, DEVICES, APPLIANCES, FIXTURES, OR EQUIPMENT SHALL BE SOLD OR INSTALLED IN THE CITY UNLESS THEY ARE IN CONFORMANCE WITH THE PROVISIONS OF SECTION 508 CITY OF HOUSTON ELECTRICAL CODE, THE LAWS OF THE STATE OF TEXAS AND ANY APPLICABLE RULES AND REGULATIONS ISSUED UNDER THE AUTHORITY OF THE STATE STATUES. THE MAKER'S NAME, TRADEMARK, OR OTHER IDENTIFICATION SYMBOL SHALL BE PLACED ON ALL ELECTRICAL MATERIALS, APPARATUS, DEVICES, APPLIANCES, FIXTURES, AND EQUIPMENT USED OR INSTALLED UNDER THE PROVISIONS OF THIS CODE. ALL ELECTRICAL MATERIALS AND EQUIPMENT SHALL BE LISTED AND LABELED FOR THE INTENDED USE AND SHALL BE INCLUDED IN A LIST PUBLISHED BY AN APPROVAL AGENCY.

NO.	DATE	REVISION	APP.

FOR INTERIM REVIEW
ONLY NOT INTENDED FOR
PERMIT, BIDDING OR
CONSTRUCTION PURPOSES.
ENGINEER:
HOSS FOROUZAN
P.E. SERIAL NO.77748
12/15/2025

GAI
Gupta & Associates, Inc.
CONSULTING ENGINEERING
Registration No. F-2593
302 Dennis St.,
Houston, Texas 77006
Tel: 713-636-2936
Fax: 713-636-2987
email: hforouzan@gaiconsulting.com

IDS Engineering Group
13430 NW. Freeway
Suite 700
Houston, Tx. 77040
713.462.3178
TxEng Firm 2726
TxSurv Firm 10110700

CITY OF HOUSTON
HOUSTON PUBLIC WORKS

LIFT STATION RENEWAL
AND REPLACEMENT FY 2023

WOODFOREST LIFT STATION CONTROL CABINET BACK DOOR ELEVATION

WBS NUMBER	FOR CITY OF HOUSTON USE ONLY
R-000267-0179-4	
DRAWING SCALE	
HORIZ: VERT:	
CITY OF HOUSTON PM	
NAWARAJ PANTA, P.E.	
SHEET NO. 265 OF 321	

DWG. NO.
WDF-I-5

IDS JOB No. 0057-085-00

FILE PATH: O:\H8108_Lift Station Rehabilitation And Reconstruction (IDS)\6 Drawings\Instrumentation And Control\1Working\WoodForest\H8108_WDF-I-05.dwg

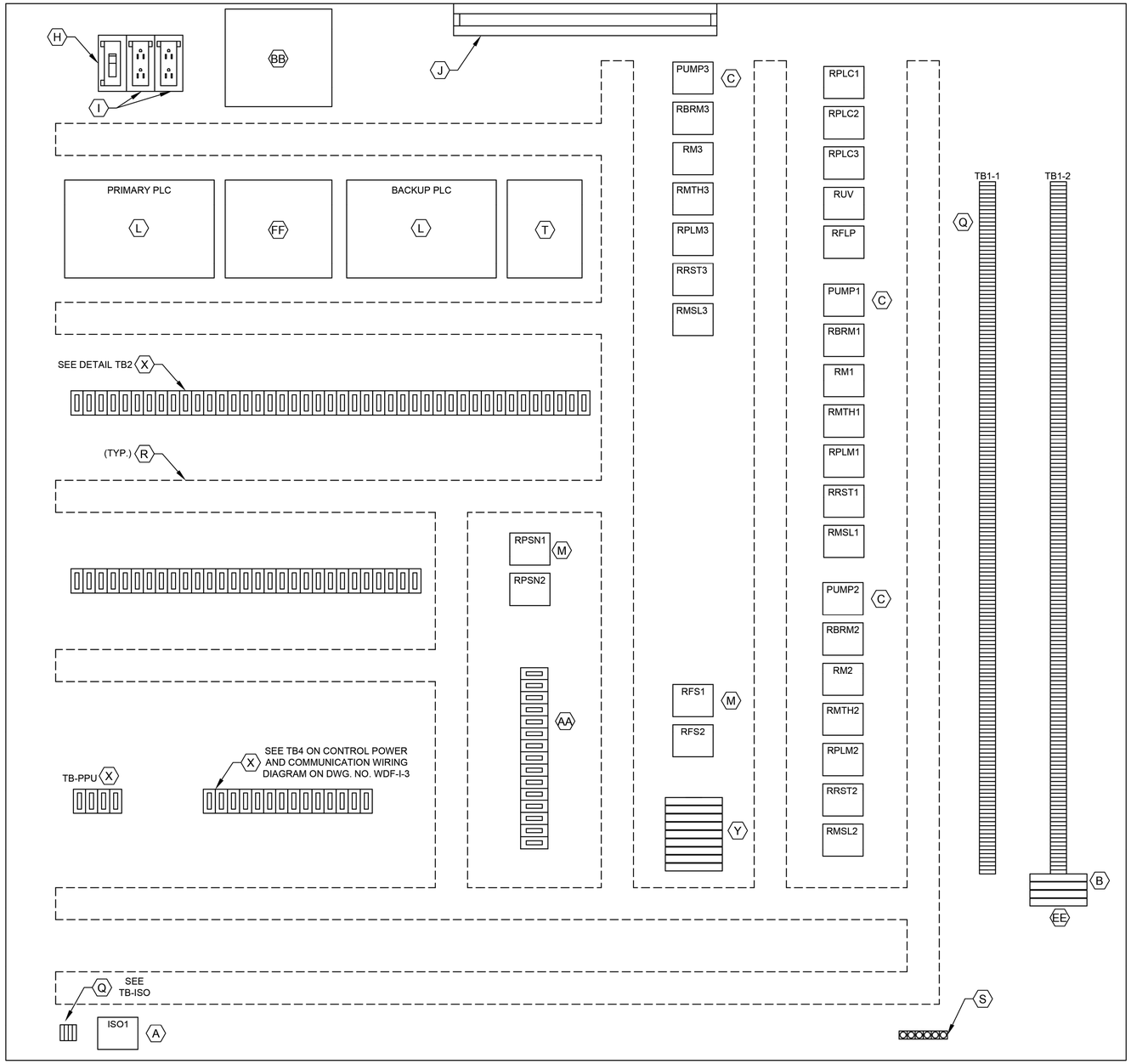

CONTROL PANEL ELEVATION

LEGEND	
TAG	DESCRIPTION
RMTH	MOTOR HIGH TEMPERATURE ALARM RELAY
RPLMP	PLC PUMP RUN RELAY
RRST	PUMP RESET AUX RELAY
RPLC	PLC MODE AUX RELAY
RM	PUMP RUN AUX RELAY
RUV	UNDER VOLTAGE RELAY
RBRM	BACKUP SYSTEM RUN RELAY
ISO	INTRINSICALLY SAFE RELAY
RFS	PUMP RUN FLOAT SWITCH RELAY
RMSL	MOTOR SEAL LEAK ALARM RELAY
RFLP	FLOAT LOCKOUT PUMP RELAY
RPSN	SODIUM NITRATE PUMP RELAY

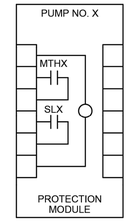

PUMP PROTECTION MODULE DETAIL, ITEM C

NOTE: REPLACE "X" WITH APPROPRIATE PUMP NO.

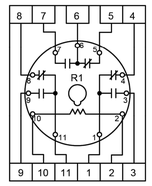

RELAY DETAIL ITEM M

NOTES:

1. SEE SHEET WDF-I-4 FOR EQUIPMENT SCHEDULE.

GENERAL NOTES:

1. NO ELECTRICAL MATERIAL, APPARATUS, DEVICES, APPLIANCES, FIXTURES, OR EQUIPMENT SHALL BE SOLD OR INSTALLED IN THE CITY UNLESS THEY ARE IN CONFORMANCE WITH THE PROVISIONS OF SECTION 508 CITY OF HOUSTON ELECTRICAL CODE, THE LAWS OF THE STATE OF TEXAS AND ANY APPLICABLE RULES AND REGULATIONS ISSUED UNDER THE AUTHORITY OF THE STATE STATUES. THE MAKER'S NAME, TRADEMARK, OR OTHER IDENTIFICATION SYMBOL SHALL BE PLACED ON ALL ELECTRICAL MATERIALS, APPARATUS, DEVICES, APPLIANCES, FIXTURES, AND EQUIPMENT USED OR INSTALLED UNDER THE PROVISIONS OF THIS CODE. ALL ELECTRICAL MATERIALS AND EQUIPMENT SHALL BE LISTED AND LABELED FOR THE INTENDED USE AND SHALL BE INCLUDED IN A LIST PUBLISHED BY AN APPROVAL AGENCY.

DETAIL TB1-1
L1A
L1N
SPARE
3
3N
SPARE
49
50
51
52
53
54
1004
1
24V-
24V-
SPARE
1002
2
11
1001
1001A
12
1003
1003A
34
3N
19
20
102
103
3P1
109
110
112
116
117
120
121
122
123
124
125
126
127
SPARE
SPARE
202
203
3P2
209
210
212
216
217
220
221
222
223
224
225
226
227

DETAIL TB1-2
SPARE
SPARE
302
303
3P3
309
310
312
316
317
320
321
322
323
324
325
326
327
SPARE
SPARE

DETAIL TB2
36A
37A
50
52
54
52A
52A
54A
L+
M
35B
38B
41B
44B
SPARE
SPARE
47B
50B
53B
13B
13AB
B
L+
M
14B
14AB
14GB
119
SPARE
L+
M
13
13A
13G
14
14A
14G
1M
2M
1L
3
30
32
34
37
38
41
33B
45
18B
SPARE

DETAIL TB2
100
112
113
114
115
117
118
119
120
121
SPARE
200
212
213
214
215
217
218
219
220
221
SPARE
300
312
313
314
315
317
318
319
320
321
SPARE

DETAIL TB-ISO
1500
1501
1503
1504

FOR INTERIM REVIEW
ONLY NOT INTENDED FOR
PERMIT, BIDDING OR
CONSTRUCTION PURPOSES.
ENGINEER:
HOSS FOROUZAN
P.E. SERIAL NO.77748
12/15/2025

GAI
Gupta & Associates, Inc.
CONSULTING ENGINEERING
Registration No. F-2593
302 Dennis St.,
Houston, Texas 77006
Tel: 713-636-2936
Fax: 713-636-2987
email: hforouzan@gaiconsulting.com

IDS Engineering Group
13430 NW. Freeway
Suite 700
Houston, Tx. 77040
713.462.3178
TxEng Firm 2726
TxSurv Firm 10110700

CITY OF HOUSTON

HOUSTON PUBLIC WORKS

LIFT STATION RENEWAL AND REPLACEMENT FY 2023

WOODFOREST LIFT STATION CONTROL CABINET EQUIPMENT LAYOUT

WBS NUMBER	FOR CITY OF HOUSTON USE ONLY
R-000267-0179-4	
DRAWING SCALE	
HORIZ: VERT:	
CITY OF HOUSTON PM	
NAWARAJ PANTA, P.E.	
SHEET NO. 266 OF 321	

DWG. NO. WDF-I-6

NO.	DATE	REVISION	APP.

PLOTTED: 12/11/2025 8:07 PM

FILE PATH: O:\H8108_Lift Station Rehabilitation And Reconstruction (IDS)\6 Drawings\Instrumentation And Control\Working\WoodForest\H8108_WDF-I-06.dwg

IDS JOB No. 0057-085-00

PLOTTED: 12/11/2025 8:07 PM

FILE PATH: O:\H8108_Lift Station Rehabilitation And Reconstruction (IDS)\6 Drawings\Instrumentation And Control\Working\WoodForest\H8108_WDF-I-07.dwg

NO.	DATE	REVISION	APP.

FIELD

CONTROL PANEL

DOOR

INTERIOR PANEL

PLC

120 VAC POWER

L1

L1N

L1A

L1A

L1N

JE-100B CONTROL POWER SURGE PROTECTOR (Y)

24VDC

3

3N

BACK UP PLC

RPLC3

11

8

36A

50mA

I0.1
BACKUP PLC
MODE ACTIVE

RFS3

1

3

37A

50mA

I0.2
FLOAT HIGH-HIGH LEVEL
ALARMS ALL PUMPS ON

OIT

(Z)

ZS-1
MANUAL TRANSFER SWITCH
CONTACTS SHOWING
SOURCE OF POWER
(SEE NOTE 1)

NORMAL

GENERATOR

49

50

51

52

53

54

50

50mA

I0.4
MTS IN NORMAL SOURCE

52

50mA

I0.5
MTS IN EMERGENCY SOURCE

54

50mA

I0.7
SPARE

120V CKT6
FROM LIGHTING
PANEL

20A

L16A

RUV

6

7

INTRINSICALLY
SAFE RELAY

ISO 1

5

6

1

3

4

RFS1

2

R

10

RFS2

2

R

10

LEVEL
TRANSMITTER J-BOX

HIGH LEVEL ALARM
FS1

HIGH-HIGH LEVEL
ALARM
FS2

FLOAT SWITCHES LOCATED
INSIDE WET WELL

1500

1501

1503

1504

RFS1

6

7

RFS1

1

3

52A

50mA

I0.2
FLOAT HIGH-HIGH LEVEL
ALARM ALL PUMPS ON

54A

50mA

I0.3
SPARE

L1A

L1N

MATCHLINE 1

LEGEND

△ DEVICE OR FIELD TERMINAL LOCATED AT MOTOR

✳ DEVICE OR FIELD TERMINAL LOCATED REMOTE

□ DEVICE OR FIELD TERMINAL LOCATED AT MCC/POWER PANEL

■ FIELD TERMINAL LOCATED AT CONTROL PANEL

▲ REMOTE TERMINAL

● DEVICE TERMINAL NO.

◆ PLC INTERFACE TERMINAL

NOTES:

1. PROVIDE AUTO TRANSFER SWITCH DRY CONTACT.
2. ALL FLOAT CONTROL CIRCUIT WIRES COLOR SHALL BE YELLOW.

GENERAL NOTES:

1. NO ELECTRICAL MATERIAL, APPARATUS, DEVICES, APPLIANCES, FIXTURES, OR EQUIPMENT SHALL BE SOLD OR INSTALLED IN THE CITY UNLESS THEY ARE IN CONFORMANCE WITH THE PROVISIONS OF SECTION 508 CITY OF HOUSTON ELECTRICAL CODE, THE LAWS OF THE STATE OF TEXAS AND ANY APPLICABLE RULES AND REGULATIONS ISSUED UNDER THE AUTHORITY OF THE STATE STATUES. THE MAKER'S NAME, TRADEMARK, OR OTHER IDENTIFICATION SYMBOL SHALL BE PLACED ON ALL ELECTRICAL MATERIALS, APPARATUS, DEVICES, APPLIANCES, FIXTURES, AND EQUIPMENT USED OR INSTALLED UNDER THE PROVISIONS OF THIS CODE. ALL ELECTRICAL MATERIALS AND EQUIPMENT SHALL BE LISTED AND LABELED FOR THE INTENDED USE AND SHALL BE INCLUDED IN A LIST PUBLISHED BY AN APPROVAL AGENCY.

FOR INTERIM REVIEW
ONLY NOT INTENDED FOR
PERMIT, BIDDING OR
CONSTRUCTION PURPOSES.
ENGINEER:
HOSS FOROUZAN
P.E. SERIAL NO.77748
12/15/2025

GAI
Gupta & Associates, Inc.
CONSULTING ENGINEERING
Registration No. F-2593
302 Dennis St.,
Houston, Texas 77006
Tel: 713-636-2936
Fax: 713-636-2987
email: hforouzan@gaiconsulting.com

IDS Engineering Group
13430 NW. Freeway
Suite 700
Houston, Tx. 77040
713.462.3178
TxEng Firm 2726
TxSurv Firm 10110700

CITY OF HOUSTON
HOUSTON PUBLIC WORKS

LIFT STATION RENEWAL
AND REPLACEMENT FY 2023

WOODFOREST LIFT STATION CONTROL PANEL CONTROL WIRING DIAGRAM-I

WBS NUMBER	FOR CITY OF HOUSTON USE ONLY
R-000267-0179-4	
DRAWING SCALE	
HORIZ: VERT:	
CITY OF HOUSTON PM	
NAWARAJ PANTA, P.E.	
SHEET NO. 267 OF 321	

DWG. NO.
WDF-I-7

IDS JOB No. 0057-085-00

PLOTTED: 12/11/2025 8:07 PM

FILE PATH: O:\H8108_Lift Station Rehabilitation And Reconstruction (IDS)\6 Drawings\Instrumentation And Control\Working\WoodForest\H8108_WDF-I-08.dwg

FIELD	MOTOR CONTROL CENTER (INDOOR)	CONTROL PANEL	
		DOOR	INTERIOR PANEL

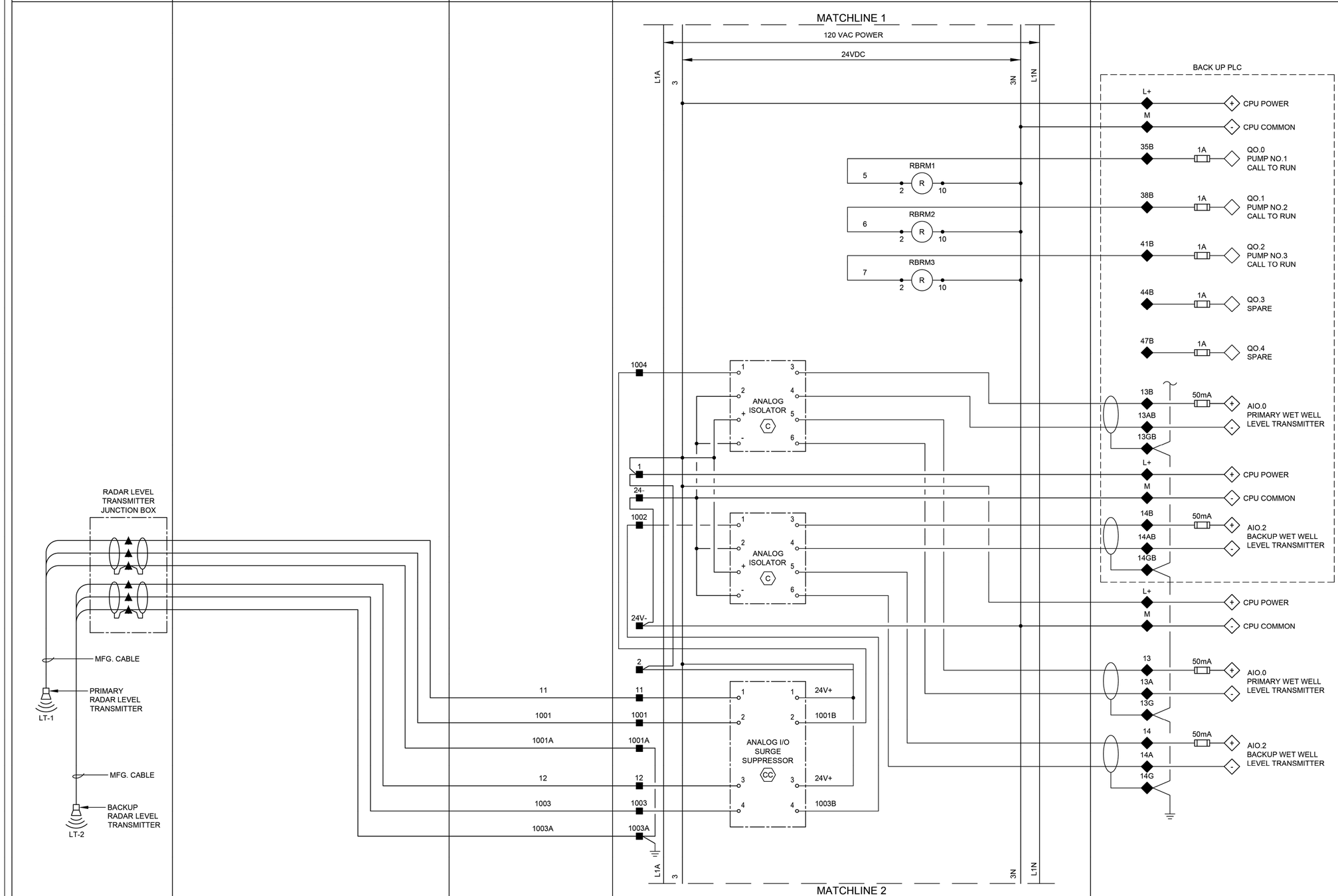

LEGEND

- △ DEVICE OR FIELD TERMINAL LOCATED AT MOTOR
- ✳ DEVICE OR FIELD TERMINAL LOCATED REMOTE
- □ DEVICE OR FIELD TERMINAL LOCATED AT MCC/POWER PANEL
- ■ FIELD TERMINAL LOCATED AT CONTROL PANEL
- ▲ REMOTE TERMINAL
- ● DEVICE TERMINAL NO.
- ◆ PLC INTERFACE TERMINAL

GENERAL NOTES:

1. NO ELECTRICAL MATERIAL, APPARATUS, DEVICES, APPLIANCES, FIXTURES, OR EQUIPMENT SHALL BE SOLD OR INSTALLED IN THE CITY UNLESS THEY ARE IN CONFORMANCE WITH THE PROVISIONS OF SECTION 508 CITY OF HOUSTON ELECTRICAL CODE, THE LAWS OF THE STATE OF TEXAS AND ANY APPLICABLE RULES AND REGULATIONS ISSUED UNDER THE AUTHORITY OF THE STATE STATUES. THE MAKER'S NAME, TRADEMARK, OR OTHER IDENTIFICATION SYMBOL SHALL BE PLACED ON ALL ELECTRICAL MATERIALS, APPARATUS, DEVICES, APPLIANCES, FIXTURES, AND EQUIPMENT USED OR INSTALLED UNDER THE PROVISIONS OF THIS CODE. ALL ELECTRICAL MATERIALS AND EQUIPMENT SHALL BE LISTED AND LABELED FOR THE INTENDED USE AND SHALL BE INCLUDED IN A LIST PUBLISHED BY AN APPROVAL AGENCY.

NO.	DATE	REVISION	APP.

FOR INTERIM REVIEW
ONLY NOT INTENDED FOR
PERMIT, BIDDING OR
CONSTRUCTION PURPOSES.
ENGINEER:
HOSS FOROUZAN
P.E. SERIAL NO.77748
12/15/2025

GAI
Gupta & Associates, Inc.
CONSULTING ENGINEERING
Registration No. F-2593
302 Dennis St.,
Houston, Texas 77006
Tel: 713-636-2916
Fax: 713-636-2987
email: hforouzan@gaiconsulting.com

IDS Engineering Group
13430 NW. Freeway
Suite 700
Houston, Tx. 77040
713.462.3178
TxEng Firm 2726
TxSurv Firm 10110700

CITY OF HOUSTON
HOUSTON PUBLIC WORKS

LIFT STATION RENEWAL AND REPLACEMENT FY 2023

WOODFOREST LIFT STATION CONTROL PANEL CONTROL WIRING DIAGRAM—II

WBS NUMBER	FOR CITY OF HOUSTON USE ONLY
R-000267-0179-4	
DRAWING SCALE	
HORIZ: VERT:	
CITY OF HOUSTON PM	
NAWARAJ PANTA, P.E.	
SHEET NO. 268 OF 321	

DWG. NO.
WDF—I—8

IDS JOB No. 0057-085-00

PLOTTED: 12/11/2025 8:07 PM

FILE PATH: O:\H8108_Lift Station Rehabilitation And Reconstruction (IDS)\6 Drawings\Instrumentation And Control\Working\WoodForest\H8108_WDF-I-09.dwg

NO.	DATE	REVISION	APP.

FIELD | MOTOR CONTROL CENTER | CONTROL PANEL: DOOR | CONTROL PANEL: INTERIOR PANEL | PLC

MATCHLINE 2

120 VAC POWER

24VDC

L1A

24+

24-

L1N

M1 M2 9

10

19

20

RFLP R 2 10

1M DI COMMON

2M AI COMMON

1L DO POWER

3 DO POWER

L1

N

MS

MOTION SWITCH

30 1A Q0.0 SPARE

32 50mA I0.0 PLC INTRUSION ALARM

L1

N

MS

MOTION SWITCH

34

34

RUV R 2 10

34 50mA I0.1 PHASE FAILURE UNDER VOLTAGE

37 50mA I0.3 SPARE

38 50mA Q0.1 PLC MODE ACTIVE

RPLC1 R 2 10

RPLC2 R 2 10

RPLC3 R 2 10

YI-1 G PRIMARY PLC

41 50mA I0.2 SPARE

BACK UP PLC

33B 50mA Q0.6 SPARE

ØA ØB ØC

JE-2 PHASE MONITOR

7 8 9 10 11 12

RPLC3 6 5

YI-2 G BACKUP PLC

N/C

YI-2 BUILDING EXTERIOR ALARM LIGHT R

45 50mA Q0.2 HIGH LEVEL ALARM

BACK UP PLC

RUV 11 9

18B 50mA I0.0 PHASE FAILURE UNDER VOLTAGE

L1A

24+

24-

L1N

MATCHLINE 3

LEGEND

△ DEVICE OR FIELD TERMINAL LOCATED AT MOTOR

✳ DEVICE OR FIELD TERMINAL LOCATED REMOTE

□ DEVICE OR FIELD TERMINAL LOCATED AT MCC/POWER PANEL

■ FIELD TERMINAL LOCATED AT CONTROL PANEL

▲ REMOTE TERMINAL

● DEVICE TERMINAL NO.

◆ PLC INTERFACE TERMINAL

GENERAL NOTES:

1. NO ELECTRICAL MATERIAL, APPARATUS, DEVICES, APPLIANCES, FIXTURES, OR EQUIPMENT SHALL BE SOLD OR INSTALLED IN THE CITY UNLESS THEY ARE IN CONFORMANCE WITH THE PROVISIONS OF SECTION 508 CITY OF HOUSTON ELECTRICAL CODE, THE LAWS OF THE STATE OF TEXAS AND ANY APPLICABLE RULES AND REGULATIONS ISSUED UNDER THE AUTHORITY OF THE STATE STATUES. THE MAKER'S NAME, TRADEMARK, OR OTHER IDENTIFICATION SYMBOL SHALL BE PLACED ON ALL ELECTRICAL MATERIALS, APPARATUS, DEVICES, APPLIANCES, FIXTURES, AND EQUIPMENT USED OR INSTALLED UNDER THE PROVISIONS OF THIS CODE. ALL ELECTRICAL MATERIALS AND EQUIPMENT SHALL BE LISTED AND LABELED FOR THE INTENDED USE AND SHALL BE INCLUDED IN A LIST PUBLISHED BY AN APPROVAL AGENCY.

FOR INTERIM REVIEW
ONLY NOT INTENDED FOR
PERMIT, BIDDING OR
CONSTRUCTION PURPOSES.
ENGINEER:
HOSS FOROUZAN
P.E. SERIAL NO.77748
12/15/2025

GAI
Gupta & Associates, Inc.
CONSULTING ENGINEERING
Registration No. F-2593
302 Dennis St.,
Houston, Texas 77006
Tel: 713-636-2936
Fax: 713-636-2987
email: hforouzan@gaiconsulting.com

IDS Engineering Group
13430 NW. Freeway
Suite 700
Houston, Tx. 77040
713.462.3178
TxEng Firm 2726
TxSurv Firm 10110700

CITY OF HOUSTON
HOUSTON PUBLIC WORKS

LIFT STATION RENEWAL
AND REPLACEMENT FY 2023

WOODFOREST LIFT STATION CONTROL PANEL CONTROL WIRING DIAGRAM—III

WBS NUMBER	FOR CITY OF HOUSTON USE ONLY
R-000267-0179-4	
DRAWING SCALE	
HORIZ: VERT:	
CITY OF HOUSTON PM	
NAWARAJ PANTA, P.E.	
SHEET NO. 269 OF 321	

DWG. NO. WDF—I—9

IDS JOB No. 0057-085-00

PLOTTED: 12/11/2025 8:07 PM

FIELD | MOTOR CONTROL CENTER | CONTROL PANEL — DOOR | INTERIOR PANEL | PLC

PUMP NO.1 M
T1 T2 T3 G
A B C
4-20mA CURRENT TRANSDUCER
Aϕ Bϕ Cϕ CT
M1 M2 M3
MCP
MCC CKT 2
VFD NO. 1 POWER MODULE
INPUT REACTOR
1A 1A
CPT - 480-120VAC 1PH, 250VA MIN
X1-1 X2-1 3A
TDLP1 TDLP1F
HS-1B VFD BYP.
SSCR1 MOR1
VFDR1
VFD RUN
SPEED SETPOINT
SPEED FEEDBACK
START/ STOP
VFD FAULT
VFD NO. 1 CONTROLLER BOARD
IE-1 MOTOR OVERLOAD RELAY (MOR) (SEE NOTE 1)
0.5A 3A CPT - 120-24VAC 1PH, 50VA
LSH-1 SEAL LEAK DETECTOR
TSH-1 MOTOR TEMP SWITCH
LAH-1 SL1
TAH-1 MTH1
RESET
TERMINAL JUNCTION BOX
PUMP PROTECTION MODULE

24 VDC POWER 24+ 24-
TBP1 SEE NOTE 2
3P1 3N1
HS-1 H-O-A
HS-1A RESET
TO SHEET WDF-I-11
RMTH1 RMSL1 RPLMP1 RM1 RPLC1 RBRM1 RFS2 YI-1 RRST1
TO 219 ON SHEET WDF-I-11

112	50mA	AI0.8 PUMP NO.1 MOTOR CURRENT
100	1A	Q0.7 PUMP NO.1 CALL TO RUN
114	50mA	I3.1 PUMP NO.1 IN HAND
115	50mA	I3.0 PUMP NO.1 IN AUTO
122	50mA	I6.0 PUMP NO.1 IN VFD MODE
123	50mA	AO0.0 PUMP NO.1 SPEED CONTROL
125	50mA	AI2.0 PUMP NO.1 SPEED INDICATION
126	50mA	
121	50mA	I3.2 PUMP NO.1 SEAL FAILURE ALARM
113	50mA	I0.7 PUMP NO.1 ON/OFF
117	50mA	I3.3 PUMP NO.1 MOTOR OVERLOAD ALARM
118	50mA	I0.6 ALARMS RESET
119	1A	Q0.4 ALARMS RESET
120	50mA	I1.1 PUMP NO.1 HIGH TEMPERATURE ALARM

LEGEND

△ DEVICE OR FIELD TERMINAL LOCATED AT MOTOR
✳ DEVICE OR FIELD TERMINAL LOCATED REMOTE
□ DEVICE OR FIELD TERMINAL LOCATED AT MCC/POWER PANEL
■ FIELD TERMINAL LOCATED AT CONTROL PANEL
▲ REMOTE TERMINAL
● DEVICE TERMINAL NO.
◆ PLC INTERFACE TERMINAL

NOTES:

1. MOTOR OVERLOAD RELAY OUTPUT CONTACT SHOWN NORMALLY CLOSED WHEN RELAY IS DE-ENERGIZED, OPEN WHEN ENERGIZED, AND CLOSED WHEN IN ALARM. VERIFY OPERATION OF RELAY PROVIDED AND ADJUST CONNECTION OF RMOR AUXILIARY RELAYS.
2. FUSED TERMINAL ON TERMINAL BLOCK TB4 SEE CONTROL POWER AND COMMUNICATION WIRING DIAGRAM DRAWING NO. WDF-I-3.
3. ALL FLOAT CONTROL CIRCUIT WIRES COLOR SHALL BE YELLOW.

GENERAL NOTES:

1. NO ELECTRICAL MATERIAL, APPARATUS, DEVICES, APPLIANCES, FIXTURES, OR EQUIPMENT SHALL BE SOLD OR INSTALLED IN THE CITY UNLESS THEY ARE IN CONFORMANCE WITH THE PROVISIONS OF SECTION 508 CITY OF HOUSTON ELECTRICAL CODE, THE LAWS OF THE STATE OF TEXAS AND ANY APPLICABLE RULES AND REGULATIONS ISSUED UNDER THE AUTHORITY OF THE STATE STATUES. THE MAKER'S NAME, TRADEMARK, OR OTHER IDENTIFICATION SYMBOL SHALL BE PLACED ON ALL ELECTRICAL MATERIALS, APPARATUS, DEVICES, APPLIANCES, FIXTURES, AND EQUIPMENT USED OR INSTALLED UNDER THE PROVISIONS OF THIS CODE. ALL ELECTRICAL MATERIALS AND EQUIPMENT SHALL BE LISTED AND LABELED FOR THE INTENDED USE AND SHALL BE INCLUDED IN A LIST PUBLISHED BY AN APPROVAL AGENCY.

NO.	DATE	REVISION	APP.

FOR INTERIM REVIEW
ONLY NOT INTENDED FOR
PERMIT, BIDDING OR
CONSTRUCTION PURPOSES.
ENGINEER:
HOSS FOROUZAN
P.E. SERIAL NO.77748
12/15/2025

GAI
Gupta & Associates, Inc.
CONSULTING ENGINEERING
Registration No. F-2593
302 Dennis St., Houston, Texas 77006
Tel: 713-636-2936
Fax: 713-636-2987
email: hforouzan@gaiconsulting.com

IDS Engineering Group
13430 NW. Freeway Suite 700
Houston, Tx. 77040
713.462.3178
TxEng Firm 2726
TxSurv Firm 10110700

CITY OF HOUSTON
HOUSTON PUBLIC WORKS

LIFT STATION RENEWAL AND REPLACEMENT FY 2023

WOODFOREST LIFT STATION PUMP NO.1 CONTROL WIRING DIAGRAM

WBS NUMBER	FOR CITY OF HOUSTON USE ONLY
R-000267-0179-4	
DRAWING SCALE	
HORIZ: VERT:	
CITY OF HOUSTON PM	
NAWARAJ PANTA, P.E.	
SHEET NO. 270 OF 321	

DWG. NO. WDF–I–10

IDS JOB No. 0057-085-00

FILE PATH: O:\H8108_Lift Station Rehabilitation And Reconstruction (IDS)\6 Drawings\Instrumentation And Control\Working\WoodForest\H8108_WDF-I-10.dwg

PLOTTED: 12/11/2025 8:07 PM

FIELD | MOTOR CONTROL CENTER | CONTROL PANEL — DOOR | INTERIOR PANEL | PLC

PUMP NO.2 M
T1 T2 T3 G
A B C
4-20mA CURRENT TRANSDUCER
Aϕ Bϕ Cϕ CT
M2 M1 MCP
VFD NO. 2 POWER MODULE
INPUT REACTOR
MCC CKT 3
1A 1A
CPT - 480-120VAC 1PH, 250VA MIN
X1-2 X2-2 3A
TDLP2 TDLP2F TDLP2F
SSCR2 SSCR2
HS-2B VFD BYP. M3 X0 M2 0X M3
MOR2
M3 X0 X0 M1
VFDR2
VFD RUN
SPEED SETPOINT
SPEED FEEDBACK
START/ STOP
VFD FAULT
VFD NO. 2 CONTROLLER BOARD
IE-2 MOTOR OVERLOAD RELAY (MOR) (SEE NOTE 1)
A B C MOR2
M3 VFDR2 M3 VFDR2
HS-2 H-O-A
YI-2
0.5A 3A CPT - 120-24VAC 1PH, 50VA
LSH-2 SEAL LEAK DETECTOR
TSH-2 MOTOR TEMP SWITCH
TERMINAL JUNCTION BOX
LAH-2 SL2
TAH-2 MTH2
RESET
PUMP PROTECTION MODULE
FROM SHEET WDF-I-10
TO SHEET WDF-I-12
FROM 119 ON SHEET WDF-I-10
TO 319 ON SHEET WDF-I-12

24 VDC POWER 24+ 24-
TBP2 SEE NOTE 2
3P2 3N2
RPLMP2 RMTH2 RMSL2 RM2 RPLC1 RBRM2 RPLMP2 RFS2 RRST2 RMTH2 RMSL2 RMTH2 RRST2 RMSL2 RRST2 RMTH2 RRST2 RMSL2

212	50mA	AI1.0	PUMP NO.2 MOTOR CURRENT
200	1A	Q1.0	PUMP NO.2 CALL TO RUN
214	50mA	I3.5	PUMP NO.2 IN HAND
215	50mA	I3.4	PUMP NO.2 IN AUTO
222	50mA	I6.2	PUMP NO.2 IN VFD MODE
223	50mA	AO0.2	PUMP NO.2 SPEED CONTROL
225	50mA	AI2.2	PUMP NO.2 SPEED INDICATION
226	50mA		
221	50mA	I3.6	PUMP NO.2 SEAL FAILURE ALARM
213	50mA	I1.2	PUMP NO.2 ON/OFF
217	50mA	I3.7	PUMP NO.2 MOTOR OVERLOAD ALARM
220	50mA	I1.3	PUMP NO.2 HIGH TEMPERATURE ALARM

NOTES:

1. MOTOR OVERLOAD RELAY OUTPUT CONTACT SHOWN NORMALLY CLOSED WHEN RELAY IS DE-ENERGIZED, OPEN WHEN ENERGIZED, AND CLOSED WHEN IN ALARM. VERIFY OPERATION OF RELAY PROVIDED AND ADJUST CONNECTION OF RMOR AUXILIARY RELAYS.
2. FUSED TERMINAL ON TERMINAL BLOCK TB4 SEE CONTROL POWER AND COMMUNICATION WIRING DIAGRAM DRAWING NO. WDF-I-3.
3. ALL FLOAT CONTROL CIRCUIT WIRES COLOR SHALL BE YELLOW.

GENERAL NOTES:

1. NO ELECTRICAL MATERIAL, APPARATUS, DEVICES, APPLIANCES, FIXTURES, OR EQUIPMENT SHALL BE SOLD OR INSTALLED IN THE CITY UNLESS THEY ARE IN CONFORMANCE WITH THE PROVISIONS OF SECTION 508 CITY OF HOUSTON ELECTRICAL CODE, THE LAWS OF THE STATE OF TEXAS AND ANY APPLICABLE RULES AND REGULATIONS ISSUED UNDER THE AUTHORITY OF THE STATE STATUES. THE MAKER'S NAME, TRADEMARK, OR OTHER IDENTIFICATION SYMBOL SHALL BE PLACED ON ALL ELECTRICAL MATERIALS, APPARATUS, DEVICES, APPLIANCES, FIXTURES, AND EQUIPMENT USED OR INSTALLED UNDER THE PROVISIONS OF THIS CODE. ALL ELECTRICAL MATERIALS AND EQUIPMENT SHALL BE LISTED AND LABELED FOR THE INTENDED USE AND SHALL BE INCLUDED IN A LIST PUBLISHED BY AN APPROVAL AGENCY.

LEGEND

- △ DEVICE OR FIELD TERMINAL LOCATED AT MOTOR
- ✳ DEVICE OR FIELD TERMINAL LOCATED REMOTE
- □ DEVICE OR FIELD TERMINAL LOCATED AT MCC/POWER PANEL
- ■ FIELD TERMINAL LOCATED AT CONTROL PANEL
- ▲ REMOTE TERMINAL
- ● DEVICE TERMINAL NO.
- ◆ PLC INTERFACE TERMINAL

NO.	DATE	REVISION	APP.

FOR INTERIM REVIEW
ONLY NOT INTENDED FOR
PERMIT, BIDDING OR
CONSTRUCTION PURPOSES.
ENGINEER:
HOSS FOROUZAN
P.E. SERIAL NO.77748
12/15/2025

GAI
Gupta & Associates, Inc.
CONSULTING ENGINEERING
Registration No. F-2593
302 Dennis St., Houston, Texas 77006
Tel: 713-636-2936
Fax: 713-636-2987
email: hforouzan@gaiconsulting.com

IDS Engineering Group
13430 NW. Freeway
Suite 700
Houston, Tx. 77040
713.462.3178
TxEng Firm 2726
TxSurv Firm 10110700

CITY OF HOUSTON
HOUSTON PUBLIC WORKS

LIFT STATION RENEWAL AND REPLACEMENT FY 2023

WOODFOREST LIFT STATION PUMP NO.2 CONTROL WIRING DIAGRAM

WBS NUMBER	FOR CITY OF HOUSTON USE ONLY
R-000267-0179-4	
DRAWING SCALE	
HORIZ: VERT:	
CITY OF HOUSTON PM	
NAWARAJ PANTA, P.E.	
DWG. NO. WDF–I–11	SHEET NO. 271 OF 321

IDS JOB No. 0057-085-00

FILE PATH: O:\H8108_Lift Station Rehabilitation And Reconstruction (IDS)\6 Drawings\Instrumentation And Control\Working\WoodForest\H8108_WDF-I-11.dwg

PLOTTED: 12/11/2025 8:07 PM

FIELD | MOTOR CONTROL CENTER | CONTROL PANEL — DOOR | INTERIOR PANEL | PLC

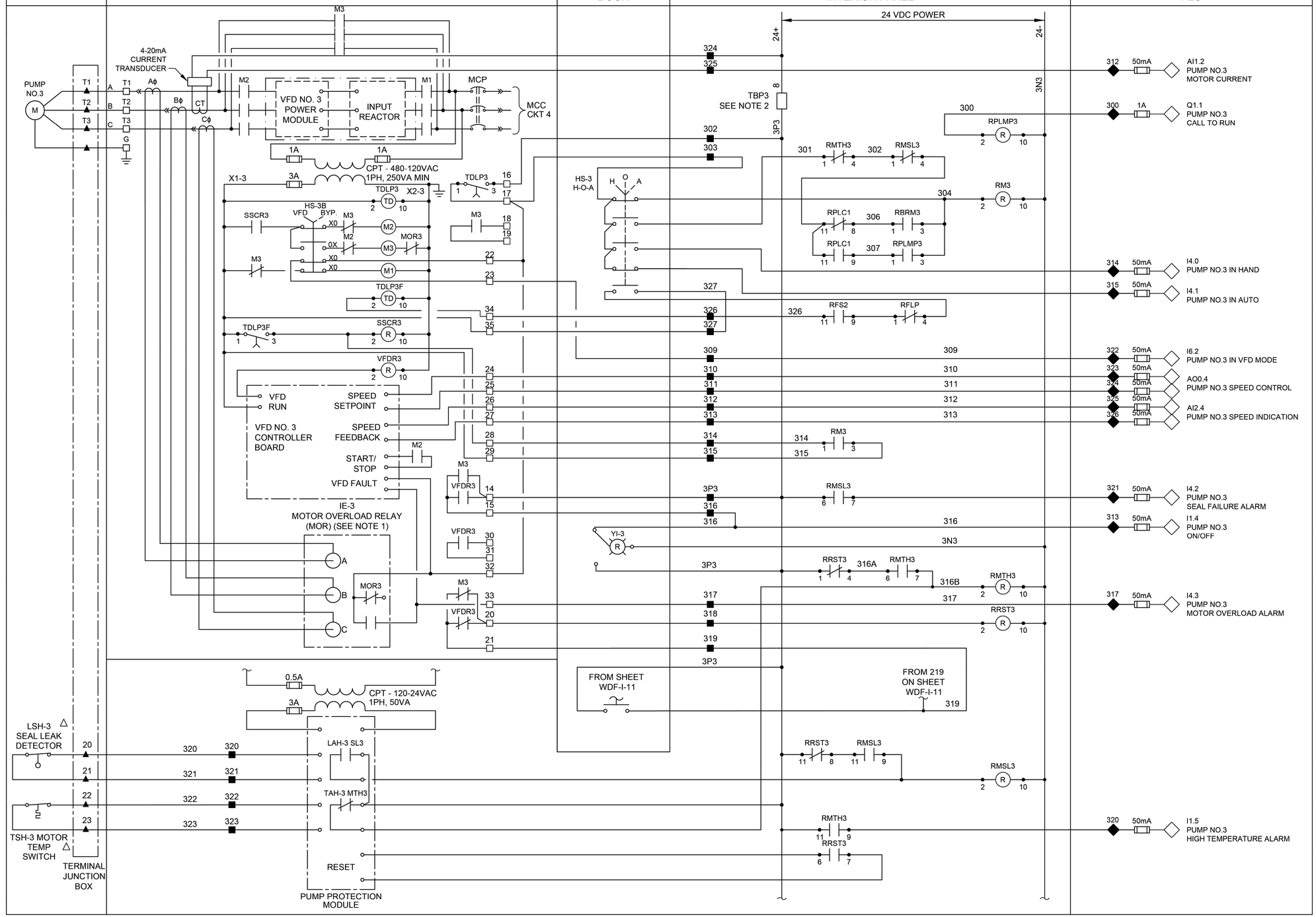

LEGEND

- △ DEVICE OR FIELD TERMINAL LOCATED AT MOTOR
- ✳ DEVICE OR FIELD TERMINAL LOCATED REMOTE
- □ DEVICE OR FIELD TERMINAL LOCATED AT MCC/POWER PANEL
- ■ FIELD TERMINAL LOCATED AT CONTROL PANEL
- ▲ REMOTE TERMINAL
- ● DEVICE TERMINAL NO.
- ◆ PLC INTERFACE TERMINAL

NOTES:

1. MOTOR OVERLOAD RELAY OUTPUT CONTACT SHOWN NORMALLY CLOSED WHEN RELAY IS DE-ENERGIZED, OPEN WHEN ENERGIZED, AND CLOSED WHEN IN ALARM. VERIFY OPERATION OF RELAY PROVIDED AND ADJUST CONNECTION OF RMOR AUXILIARY RELAYS.
2. FUSED TERMINAL ON TERMINAL BLOCK TB4 SEE CONTROL POWER AND COMMUNICATION WIRING DIAGRAM DRAWING NO. WDF-I-3.
3. ALL FLOAT CONTROL CIRCUIT WIRES COLOR SHALL BE YELLOW.

GENERAL NOTES:

1. NO ELECTRICAL MATERIAL, APPARATUS, DEVICES, APPLIANCES, FIXTURES, OR EQUIPMENT SHALL BE SOLD OR INSTALLED IN THE CITY UNLESS THEY ARE IN CONFORMANCE WITH THE PROVISIONS OF SECTION 508 CITY OF HOUSTON ELECTRICAL CODE, THE LAWS OF THE STATE OF TEXAS AND ANY APPLICABLE RULES AND REGULATIONS ISSUED UNDER THE AUTHORITY OF THE STATE STATUES. THE MAKER'S NAME, TRADEMARK, OR OTHER IDENTIFICATION SYMBOL SHALL BE PLACED ON ALL ELECTRICAL MATERIALS, APPARATUS, DEVICES, APPLIANCES, FIXTURES, AND EQUIPMENT USED OR INSTALLED UNDER THE PROVISIONS OF THIS CODE. ALL ELECTRICAL MATERIALS AND EQUIPMENT SHALL BE LISTED AND LABELED FOR THE INTENDED USE AND SHALL BE INCLUDED IN A LIST PUBLISHED BY AN APPROVAL AGENCY.

NO.	DATE	REVISION	APP.

FOR INTERIM REVIEW
ONLY NOT INTENDED FOR
PERMIT, BIDDING OR
CONSTRUCTION PURPOSES.
ENGINEER:
HOSS FOROUZAN
P.E. SERIAL NO.77748
12/15/2025

GAI
Gupta & Associates, Inc.
CONSULTING ENGINEERING
Registration No. F-2593
302 Dennis St.,
Houston, Texas 77006
Tel: 713-636-2936
Fax: 713-636-2987
email: hforouzan@gaiconsulting.com

IDS Engineering Group
13430 NW. Freeway
Suite 700
Houston, Tx. 77040
713.462.3178
TxEng Firm 2726
TxSurv Firm 10110700

CITY OF HOUSTON
HOUSTON PUBLIC WORKS

LIFT STATION RENEWAL AND REPLACEMENT FY 2023

WOODFOREST LIFT STATION PUMP NO.3 CONTROL WIRING DIAGRAM

WBS NUMBER	FOR CITY OF HOUSTON USE ONLY
R-000267-0179-4	
DRAWING SCALE	
HORIZ: VERT:	
CITY OF HOUSTON PM	
NAWARAJ PANTA, P.E.	
SHEET NO. 272 OF 321	

DWG. NO. WDF–I–12

IDS JOB No. 0057-085-00

FILE PATH: O:\H8108_Lift Station Rehabilitation And Reconstruction (IDS)\6 Drawings\Instrumentation And Control\Working\WoodForest\H8108_WDF–I–12.dwg

PLOTTED: 12/11/2025 8:07 PM

HMI

TANK LEAK ALARM MA 001
LEVEL INDICATION LI 101
HIGH ALARM LAH 101
LOW ALARM LAL 101
PUMP NO. 1 RUN YFS 101
PUMP NO. 1 FAIL XA 101
PUMP NO. 1 START/ STOP YCS 101
PUMP NO. 1 SPEED IND. SI 101
PUMP NO. 1 SPEED CNTRL. SC 101
PUMP NO. 2 RUN YFS 102
PUMP NO. 2 FAIL XA 102
PUMP NO. 2 START/ STOP YCS 102
PUMP NO. 2 SPEED IND. SI 102
PUMP NO. 2 SPEED CNTRL. SC 102
FLOW IND. FI 101
FLOW TOTALIZER FRQ 101

CONTROL PANEL PLC

CONTROL PANEL

FROM SHEET WF-I2

FIELD

SODIUM NITRATE CONTROL PANEL (1)

LT 101

CHEMICAL FEED SYSTEM (1)

CALIBRATION CHAMBER

PRESSURE RELIEF VALVE

PRESSURE GAUGE W/ REGULATOR PI 101

PULSATION DAMPER

BACK PRESSURE VALVE

120V AC FIT 101

TRANSIT FLOW METER

LDS

NEW SODIUM NITRATE TANK T-001

LEAK DETECTION SWITCH

DOUBLE WALL CONTAINMENT WITH LEAK DETECTION SWITCH

PERISTALTIC SODIUM NITRATE PMP-CN-101

SIGHT GLASS

PRESSURE RELIEF VALVE

PERISTALTIC SODIUM NITRATE PMP-CN-102

SIGHT GLASS

DRAIN VALVE

LEGEND

- △ DEVICE OR FIELD TERMINAL LOCATED AT EQUIPMENT
- ✳ DEVICE OR FIELD TERMINAL LOCATED REMOTE
- □ DEVICE OR FIELD TERMINAL LOCATED AT CHEMICAL CONTROL PANEL
- ■ FIELD TERMINAL LOCATED AT CONTROL PANEL
- ▲ REMOTE TERMINAL
- ● DEVICE TERMINAL NO.
- ◆ PLC INTERFACE TERMINAL

NO.	DATE	REVISION	APP.

NOTES:

(1) TO BE PROVIDED BY CHEMICAL FEED SYSTEM MANUFACTURER.

GENERAL NOTES:

1. NO ELECTRICAL MATERIAL, APPARATUS, DEVICES, APPLIANCES, FIXTURES, OR EQUIPMENT SHALL BE SOLD OR INSTALLED IN THE CITY UNLESS THEY ARE IN CONFORMANCE WITH THE PROVISIONS OF SECTION 508 CITY OF HOUSTON ELECTRICAL CODE, THE LAWS OF THE STATE OF TEXAS AND ANY APPLICABLE RULES AND REGULATIONS ISSUED UNDER THE AUTHORITY OF THE STATE STATUES. THE MAKER'S NAME, TRADEMARK, OR OTHER IDENTIFICATION SYMBOL SHALL BE PLACED ON ALL ELECTRICAL MATERIALS, APPARATUS, DEVICES, APPLIANCES, FIXTURES, AND EQUIPMENT USED OR INSTALLED UNDER THE PROVISIONS OF THIS CODE. ALL ELECTRICAL MATERIALS AND EQUIPMENT SHALL BE LISTED AND LABELED FOR THE INTENDED USE AND SHALL BE INCLUDED IN A LIST PUBLISHED BY AN APPROVAL AGENCY.

FOR INTERIM REVIEW
ONLY NOT INTENDED FOR
PERMIT, BIDDING OR
CONSTRUCTION PURPOSES.
ENGINEER:
HOSS FOROUZAN
P.E. SERIAL NO.77748
12/15/2025

GAI
Gupta & Associates, Inc.
CONSULTING ENGINEERING
Registration No. F-2593
302 Dennis St.,
Houston, Texas 77006
Tel: 713-636-2936
Fax: 713-636-2987
email: hforouzan@gaiconsulting.com

IDS Engineering Group
13430 NW. Freeway
Suite 700
Houston, Tx. 77040
713.462.3178
TxEng Firm 2726
TxSurv Firm 10110700

CITY OF HOUSTON
HOUSTON PUBLIC WORKS

LIFT STATION RENEWAL AND REPLACEMENT FY 2023

WOODFOREST LIFT STATION SODIUM NITRATE FEED PUMPS P&ID DIAGRAM

WBS NUMBER	FOR CITY OF HOUSTON USE ONLY
R-000267-0179-4	
DRAWING SCALE	
HORIZ: VERT:	
CITY OF HOUSTON PM	
NAWARAJ PANTA, P.E.	
DWG. NO. WDF-I-13	SHEET NO. 273 OF 321

IDS JOB No. 0057-085-00

FILE PATH: O:\H8108_Lift Station Rehabilitation And Reconstruction (IDS)\6 Drawings\Instrumentation And Control\Working\WoodForest\H8108_WDF-I-13.dwg

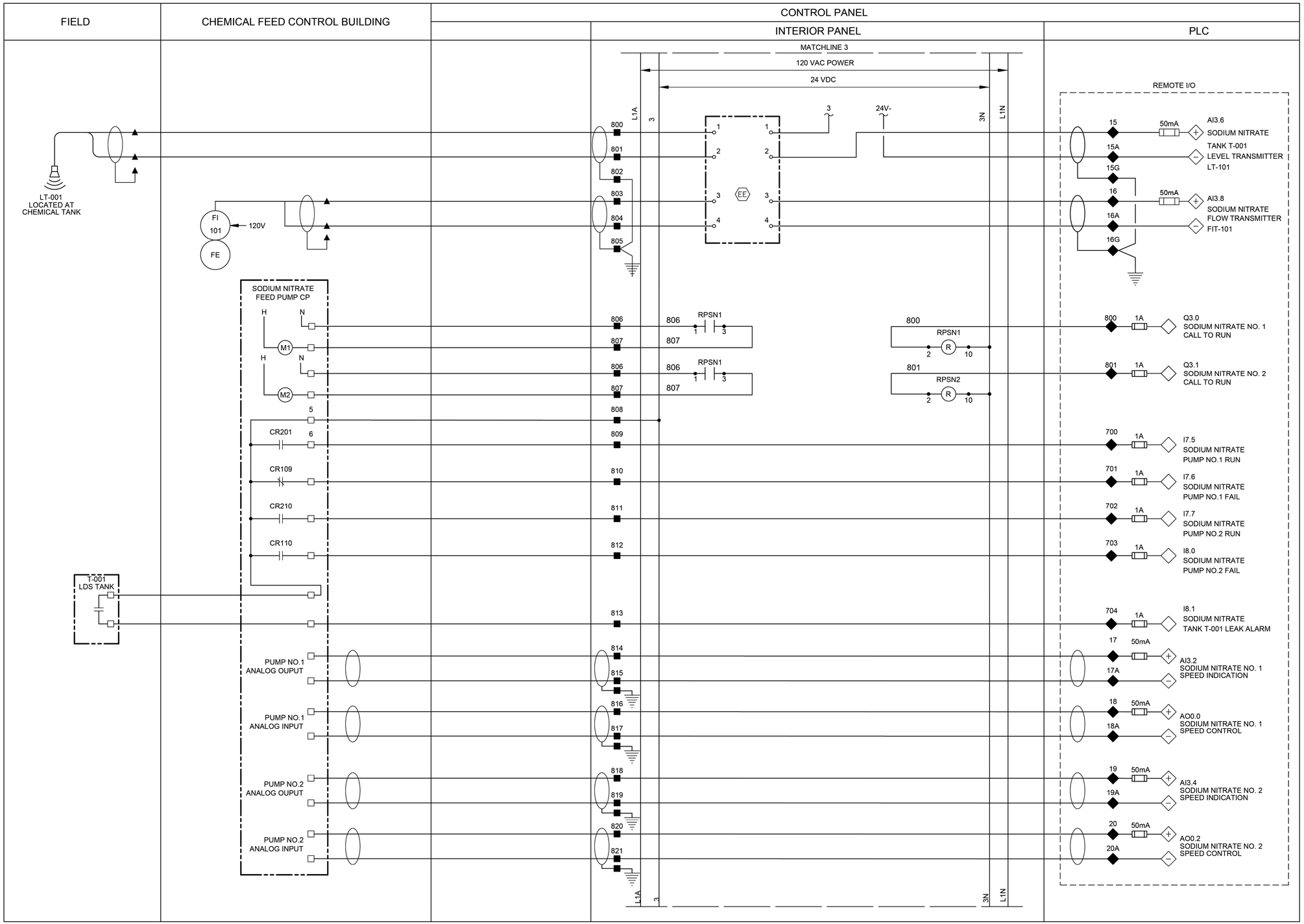

GENERAL NOTES:

1. NO ELECTRICAL MATERIAL, APPARATUS, DEVICES, APPLIANCES, FIXTURES, OR EQUIPMENT SHALL BE SOLD OR INSTALLED IN THE CITY UNLESS THEY ARE IN CONFORMANCE WITH THE PROVISIONS OF SECTION 508 CITY OF HOUSTON ELECTRICAL CODE, THE LAWS OF THE STATE OF TEXAS AND ANY APPLICABLE RULES AND REGULATIONS ISSUED UNDER THE AUTHORITY OF THE STATE STATUES. THE MAKER'S NAME, TRADEMARK, OR OTHER IDENTIFICATION SYMBOL SHALL BE PLACED ON ALL ELECTRICAL MATERIALS, APPARATUS, DEVICES, APPLIANCES, FIXTURES, AND EQUIPMENT USED OR INSTALLED UNDER THE PROVISIONS OF THIS CODE. ALL ELECTRICAL MATERIALS AND EQUIPMENT SHALL BE LISTED AND LABELED FOR THE INTENDED USE AND SHALL BE INCLUDED IN A LIST PUBLISHED BY AN APPROVAL AGENCY.

LEGEND

- △ DEVICE OR FIELD TERMINAL LOCATED AT EQUIPMENT
- ✳ DEVICE OR FIELD TERMINAL LOCATED REMOTE
- □ DEVICE OR FIELD TERMINAL LOCATED AT CHEMICAL CONTROL PANEL
- ■ FIELD TERMINAL LOCATED AT CONTROL PANEL
- ▲ REMOTE TERMINAL
- ● DEVICE TERMINAL NO.
- ◆ PLC INTERFACE TERMINAL

FOR INTERIM REVIEW
ONLY NOT INTENDED FOR
PERMIT, BIDDING OR
CONSTRUCTION PURPOSES.
ENGINEER:
HOSS FOROUZAN
P.E. SERIAL NO.77748
12/15/2025

GAI
Gupta & Associates, Inc.
CONSULTING ENGINEERING
Registration No. F-2593
302 Dennis St.,
Houston, Texas 77006
Tel: 713-636-2936
Fax: 713-636-2987
email: hforouzan@gaiconsulting.com

IDS Engineering Group
13430 NW. Freeway
Suite 700
Houston, Tx. 77040
713.462.3178
TxEng Firm 2726
TxSurv Firm 10110700

CITY OF HOUSTON
HOUSTON PUBLIC WORKS

LIFT STATION RENEWAL
AND REPLACEMENT FY 2023

WOODFOREST LIFT STATION SODIUM NITRATE FEED PUMPS WIRING DIAGRAM

WBS NUMBER	FOR CITY OF HOUSTON USE ONLY
R-000267-0179-4	
DRAWING SCALE	
HORIZ: VERT:	
CITY OF HOUSTON PM	
NAWARAJ PANTA, P.E.	
SHEET NO. 274 OF 321	

DWG. NO. WDF-I-14

NO.	DATE	REVISION	APP.

IDS JOB No. 0057-085-00

PLOTTED: 12/11/2025 8:07 PM

FILE PATH: O:\H8108_Lift Station Rehabilitation And Reconstruction (IDS)\6 Drawings\Instrumentation And Control\Working\WoodForest\H8108_WDF-I-14.dwg

PLOTTED: 12/11/2025 8:07 PM

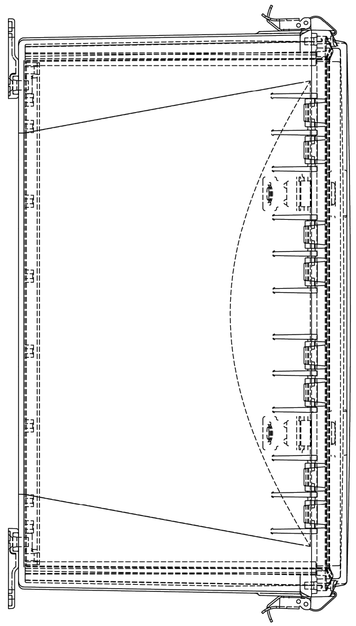

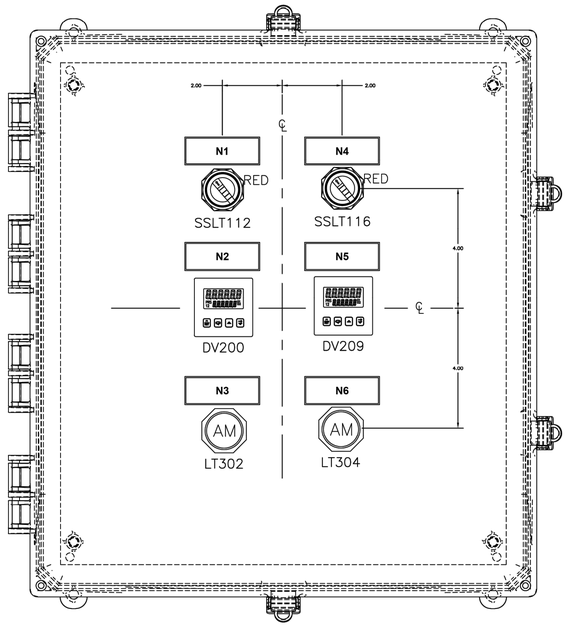

TYPE 4X ENCLOSURE
18x16x10

CHEMICAL FEED PUMP CONTROL PANEL

DETAIL 1 / NTS –

CHEMICAL FEED PUMP CONTROL PANEL

DESIGNATION	ENGRAVED
N1	PUMP A HAND-OFF-REMOTE
N2	PUMP A SPEED
N3	PUMP A ALARM
N4	PUMP B HAND-OFF-REMOTE
N5	PUMP B SPEED
N6	PUMP B ALARM

GENERAL NOTES:

1. NO ELECTRICAL MATERIAL, APPARATUS, DEVICES, APPLIANCES, FIXTURES, OR EQUIPMENT SHALL BE SOLD OR INSTALLED IN THE CITY UNLESS THEY ARE IN CONFORMANCE WITH THE PROVISIONS OF SECTION 508 CITY OF HOUSTON ELECTRICAL CODE, THE LAWS OF THE STATE OF TEXAS AND ANY APPLICABLE RULES AND REGULATIONS ISSUED UNDER THE AUTHORITY OF THE STATE STATUES. THE MAKER'S NAME, TRADEMARK, OR OTHER IDENTIFICATION SYMBOL SHALL BE PLACED ON ALL ELECTRICAL MATERIALS, APPARATUS, DEVICES, APPLIANCES, FIXTURES, AND EQUIPMENT USED OR INSTALLED UNDER THE PROVISIONS OF THIS CODE. ALL ELECTRICAL MATERIALS AND EQUIPMENT SHALL BE LISTED AND LABELED FOR THE INTENDED USE AND SHALL BE INCLUDED IN A LIST PUBLISHED BY AN APPROVAL AGENCY.

NO.	DATE	REVISION	APP.

FOR INTERIM REVIEW
ONLY NOT INTENDED FOR
PERMIT, BIDDING OR
CONSTRUCTION PURPOSES.
ENGINEER:
HOSS FOROUZAN
P.E. SERIAL NO.77748
12/15/2025

GAI
Gupta & Associates, Inc.
CONSULTING ENGINEERING
Registration No. F-2593
302 Dennis St.,
Houston, Texas 77006
Tel: 713-636-2936
Fax: 713-636-2987
email: hforouzan@gaiconsulting.com

IDS Engineering Group
13430 NW. Freeway
Suite 700
Houston, Tx. 77040
713.462.3178
TxEng Firm 2726
TxSurv Firm 10110700

CITY OF HOUSTON
HOUSTON PUBLIC WORKS

LIFT STATION RENEWAL
AND REPLACEMENT FY 2023

WOODFOREST LIFT STATION SODIUM NITRATE FEED PUMPS CONTROL PANEL

WBS NUMBER	FOR CITY OF HOUSTON USE ONLY
R-000267-0179-4	
DRAWING SCALE	
HORIZ: VERT:	
CITY OF HOUSTON PM	
NAWARAJ PANTA, P.E.	
DWG. NO. WDF–I–15	SHEET NO. 275 OF 321

IDS JOB No. 0057-085-00

FILE PATH: O:\H8108_Lift Station Rehabilitation And Reconstruction (IDS)\6 Drawings\Instrumentation And Control\Working\WoodForest\H8108_WDF–I–15.dwg

PLOTTED: 12/17/2025 8:39 AM

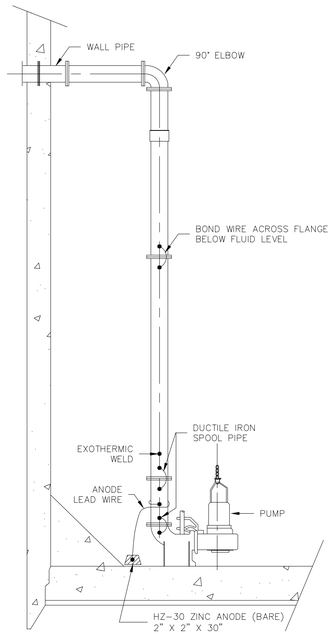

1 WET WELL DIRECT CONNECT ANODE INSTALLATION

Scale: N.T.S.
File:

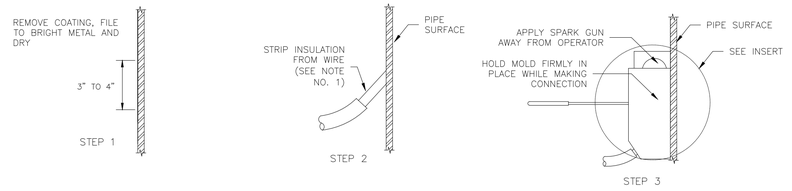

NOTES:
1. FOR #14 AWG SOLID TO #10 STRANDED WIRE CRIMP A PROPERLY SIZED COPPER SLEEVE OVER BARE WIRE.
2. THERMITE WELD PROCEDURES SIMILAR FOR "L" BRACKETS.
3. REPAIR ALL DAMAGE TO COATING AND LINING IN ACCORDANCE WITH MANUFACTURER'S RECOMMENDATIONS.
4. CUT LENGTH OF STOPAQ CZ TAPE TO FIT DAMAGED COATING AREA INCLUDING THERMITE WELD AND ANY EXPOSED METAL. REMOVE CLEAR BACKING FROM TAPE AND APPLY TO DAMAGED AREAS. MOLD AND SHAPE TAPE TO FIT ALL BARE METAL AREAS.

2 VERTICAL THERMITE BRAZED CONNECTION

Scale: N.T.S.
File:

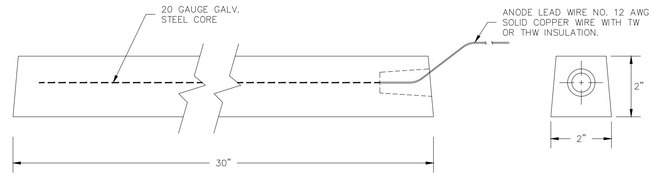

3 WET WELL ANODE DETAIL HZ-30 ZINC ANODE (BARE)

Scale: N.T.S.
File:

NOTES:
1. PROVIDE 4" ABRASIVE (NON –SLIP)NOSING (TYP) 4" FROM WALL, CURB OR EDGE.
2. STAIR WIDTH SHALL BE 3'.
3. TYPICAL RISER HEIGHT SHALL BE 7" MAX.
4. #5 DOWELS @ 2'–0" W/4" MIN EMBED IN EACH DIRECTION.
5. MINIMUM COMPRESSIVE STRENGTH OF CONCRETE IS 3,000 PSI.
6. FOR THE NUMBER OF PROPOSED STEPS, REFER TO PROPOSED SITE PLAN.

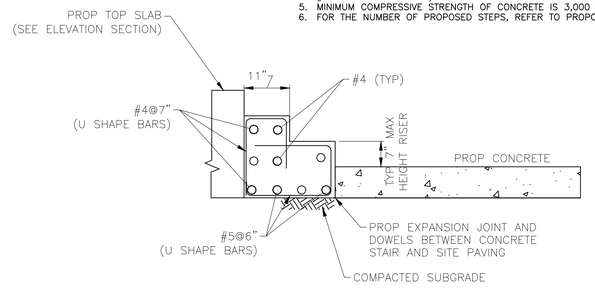

4 CONCRETE STAIR DETAIL

Scale: N.T.S.
File:

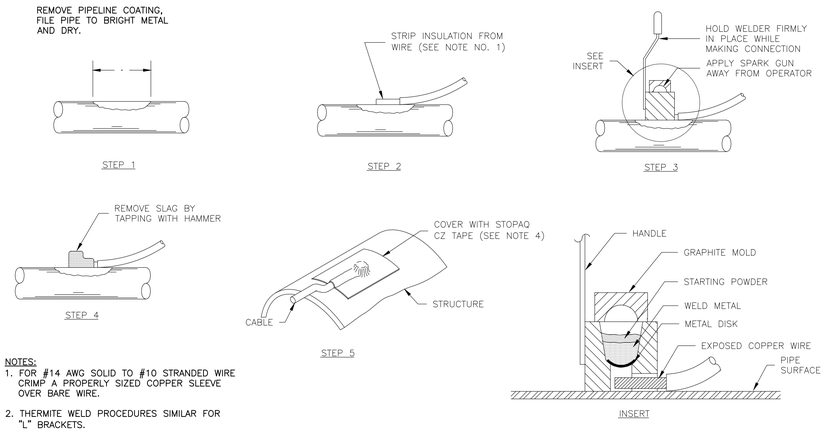

NOTES:
1. FOR #14 AWG SOLID TO #10 STRANDED WIRE CRIMP A PROPERLY SIZED COPPER SLEEVE OVER BARE WIRE.
2. THERMITE WELD PROCEDURES SIMILAR FOR "L" BRACKETS.
3. REPAIR ALL DAMAGE TO COATING AND LINING IN ACCORDANCE WITH MANUFACTURER'S RECOMMENDATIONS.
4. CUT LENGTH OF STOPAQ CZ TAPE TO FIT DAMAGED COATING AREA INCLUDING THERMITE WELD AND ANY EXPOSED METAL. REMOVE CLEAR BACKING FROM TAPE AND APPLY TO DAMAGED AREAS. MOLD AND SHAPE TAPE TO FIT ALL BARE METAL AREAS.

5 HORIZONTAL THERMITE BRAZED CONNECTION

Scale: N.T.S.
File:

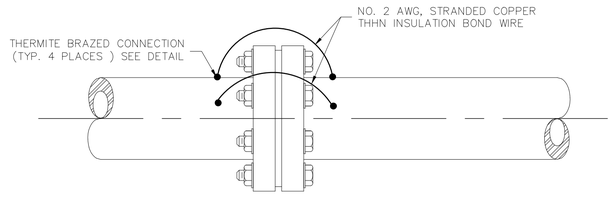

NOTE: BOND WIRES SHALL BE PLACED A MINIMUM OF 6" APART.

6 ELECTRICAL BONDING ACROSS FLANGE

Scale: N.T.S.
File:

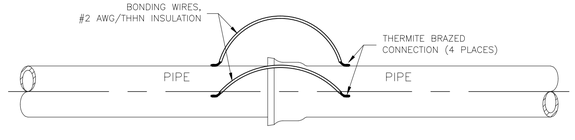

NOTE: BOND WIRES SHALL BE PLACED A MINIMUM OF 6" APART.

7 BELL & SPIGOT BONDING

Scale: N.T.S.
File:

NO.	DATE	REVISION	APP.

IDS Engineering Group
13430 NW. Freeway, Suite 700
Houston, Tx. 77040
713.462.3178
TxEng Firm 2726 | TxSurv Firm 10110700

SURVEYED BY: KUO & ASSOCIATES, INC.
TBPE FIRM #F-4578; TBPLS FIRM #1007560

THIS DOCUMENT IS RELEASED FOR THE PURPOSE OF REVIEW UNDER THE AUTHORITY OF MARCEL KHOUW, P.E. 101807 ON 12/17/2025. IT IS NOT TO BE USED FOR CONSTRUCTION PURPOSES.

CITY OF HOUSTON
HOUSTON PUBLIC WORKS

LIFT STATION RENEWAL AND REPLACEMENT FY 2023

MISCELLANEOUS DETAILS (SHEET 1 OF 2)

WBS NUMBER	FOR CITY OF HOUSTON USE ONLY
R–000267–0179–4	
DRAWING SCALE	
HORIZ: N.T.S. VERT: N/A	
CITY OF HOUSTON PM	
NAWARAJ PANTA, P.E.	
DWG. NO. C–01	SHEET NO. 276 OF 321

FILE PATH: \\idseg.com\FS\Projects\0000\005708500 CoH Lift Stations – FY 2023\CAD\DWG\PRODUCTION\276-MISC DTLS 1 OF 2.dwg

PLOTTED: 12/17/2025 8:39 AM

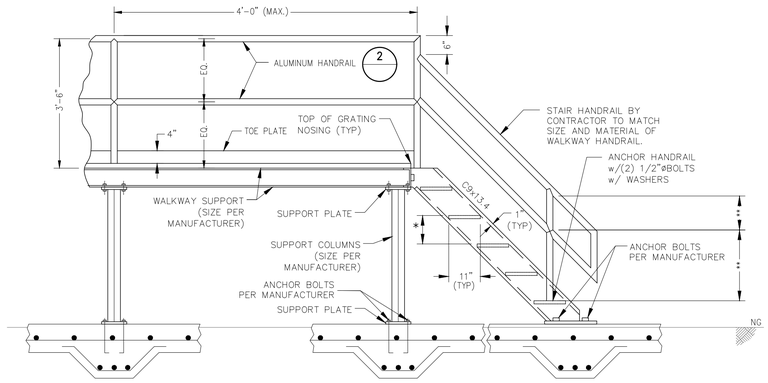

NOTES:

1. NUMBER OF STAIRS WILL VARY WITH LOCATION. STAIR VERTICAL SPACING SHALL BE BETWEEN 8" AND 9" BUT WILL BE CONSISTENT.
2. STAIRS SHALL BE 3' WIDE UNLESS OTHERWISE NOTED.
3. THE CONTRACTOR SHALL SUBMIT FABRICATED DRAWINGS OF PLATFORMS AND CONCRETE FOUNDATIONS SIGNED AND SEALED BY A PROFESSIONAL ENGINEER IN THE STATE OF TEXAS ON DRAWINGS AS SHOWN FOR APPROVAL BY THE ENGINEER.
4. PLATFORMS MUST BE MANUFACTURED BY A CITY OF HOUSTON APPROVED FABRICATOR.
5. FOUNDATION TYPES MAY VARY. REFER TO STRUCTURAL DRAWINGS.
6. PLATFORM GRATING AND HANDRAILS ARE REQUIRED TO BE MADE OF ALUMINUM. ALL ALUMINUM COMPONENTS SHALL BE POWDER COATED FOREST GREEN.
7. PLATFORM STRUCTURAL MEMBERS, COLUMNS AND CHANNELS SHALL BE FRP OR ALUMINUM AS PER WASTEWATER OPERATIONS.
8. SEE STRUCTURAL DRAWING.
9. DIMENSIONS TO MATCH PLATFORM HANDRAIL

1	ACCESS STAIR DETAIL	Scale: N.T.S.
		File:

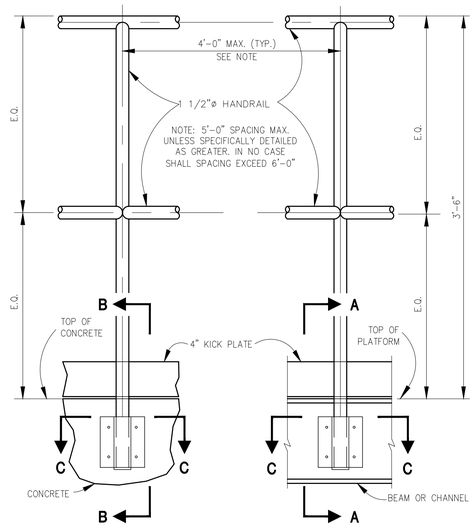

ELEVATION

NOTES:

1. HANDRAIL GRASPABILITY SHALL COMPLY WITH SECTION 1012.3 OF 2012 IBC.
2. WHERE HANDRAIL IS DISCONTINUOUS HANDRAIL SHALL EXTEND HORIZONTALLY 12" BEYOND THE TOP RISER, AND CONTINUE TO SLOPE FOR ONE TREAD BEYOND THE BOTTOM RISER.
3. HANDRAIL SHALL MAINTAIN A MINIMUM CLEARANCE OF 1-1/2" FROM AN ADJACENT WALL OR SURFACE AND BE FREE OF SHARP OR ABRASIVE ELEMENTS.
4. GUARD OPENINGS SHALL COMPLY WITH SECTION 1013.4 OF 2012 IBC.

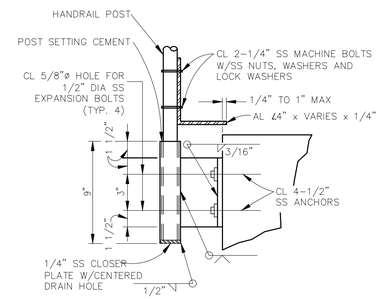

DETAIL SECTION 'A'

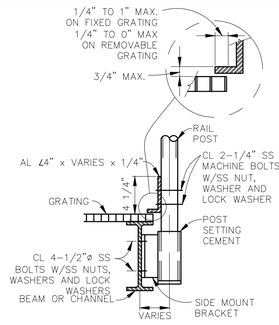

DETAIL SECTION 'B'

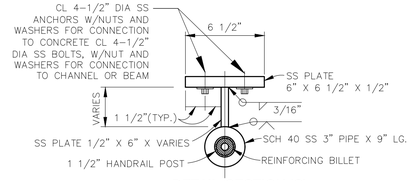

DETAIL SECTION 'C'

MISCELLANEOUS METALS NOTE:

1. WHERE ALUMINUM OR ALLOY SURFACES, FITTINGS OR EXTRUSIONS ARE TO BE IN CONTACT WITH DISSIMILAR METALS, GROUT, CONCRETE, MASONRY OR WOOD, COAT ALUMINUM AND/OR ALLOYS SURFACES PER SPECIFICATIONS DIVISION 9. IF DIVISION 9 IS NOT INCLUDED IN THE SPECIFICATIONS OR DOES NOT ADDRESS CORROSION PROTECTION, AFTER PREPARATION OF SURFACES, COAT WITH A HEAVY COAT, MINIMUM THICKNESS OF 10 MILS, OF BITUMINOUS PAINT, OR INSTALL AN APPROVED NON-ABSORPTIVE ISOLATION PAD TO PREVENT CONTACT.

2	HANDRAIL SIDEMOUNT DETAIL	Scale: N.T.S.
		File:

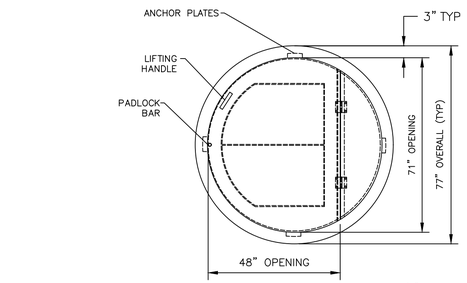

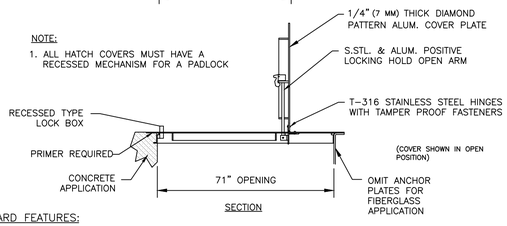

NOTE:
1. ALL HATCH COVERS MUST HAVE A RECESSED MECHANISM FOR A PADLOCK

SECTION

STANDARD FEATURES:

- AUTO-LOCK T-316 STAINLESS STEEL HOLD OPEN ARM WITH RELEASE HANDLE
- T-316 STAINLESS STEEL HINGES AND ATTACHING HARDWARE
- NON-CORROSIVE LOCKING BAR
- SINGLE LEAF CONSTRUCTION FOR MAXIMUM ACCESS
- 300 LBS. PER SQ. FT. LOAD RATING (1464 KG. PER SQ. METER LOAD RATING)
- EXTRUDED ALUMINUM FRAME
- RECESSED LIFTING HANDLE
- ANCHOR PLATES (ORDER WITHOUT FOR FIBERGLASS OR DROP-IN INSTALLATIONS)
- LIFETIME GUARANTEE
- COVERED FRAME PAINTED FOREST GREEN
- PROVIDE ACCESS HATCH DOOR WITH RECESSED (PATERNAL) TYPE PADLOCK CLIPS. EXPOSED PADLOCK CLIP NOT ALLOWED.

STANDARD SIZES

QTY.	MODEL NO.	A DIM. INCHES (MM)	B DIM. INCHES (MM)	C DIM. INCHES (MM)	UNIT WT. LBS. (KG.)
1	R1R72	48 (1219)	71 (1803)	77 (1956)	175 (79)

3	FORCE MAIN BYPASS HATCH DETAIL	Scale: N.T.S.
		File:

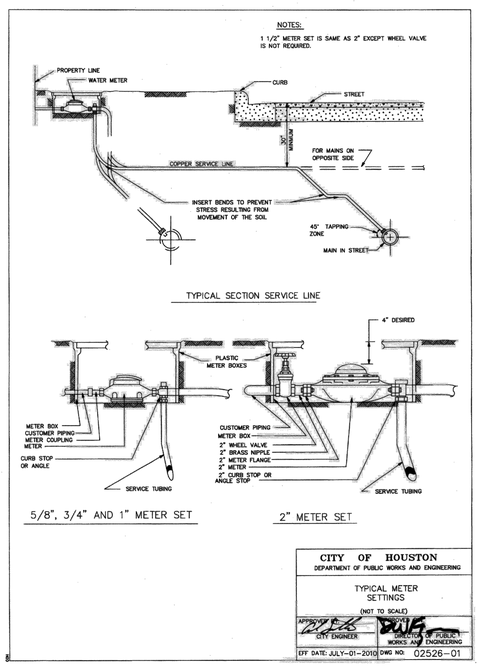

4	TYPICAL METER SETTINGS	Scale: N.T.S.
		File:

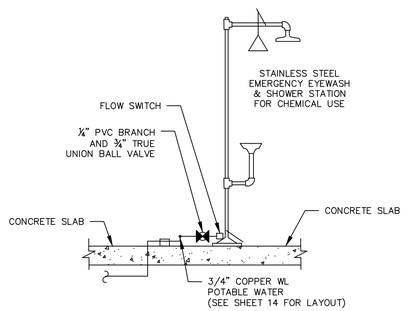

NOTES:

1. EYEWASH UNITS SHALL BE EYEWASH/SHOWER COMBINATION WITH INSULATION AND HEAT TRACING FOR FREEZE PROOF OPERATION. INDIVIDUAL OPERATION OF 10-INCH DELUXE SHOWER HEAD AND TWIN FACE SPRAY UNITS SHALL BE PROVIDED. PROVIDE TEMPERATURE ACTUATED BLEED VALVES. UNITS SHALL BE HAWS MODEL 8317 CTFP OR APPROVED EQUIVALENT.
2. MOUNT TO SLAB PER MANUFACTURER'S INSTRUCTIONS. USE 316 SS EPOXY ANCHORS.

5	EMERGENCY SHOWER AND EYEWASH DETAIL	Scale: N.T.S.
		File:

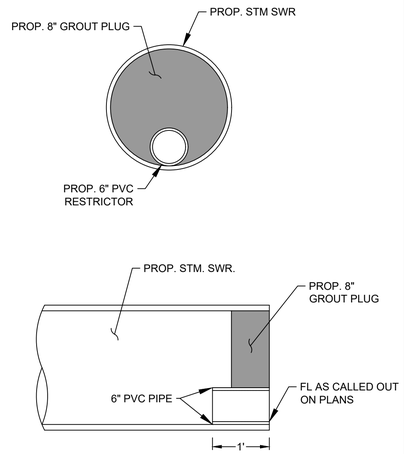

6	GROUT RESTRICTOR DETAIL	Scale: N.T.S.

IDS Engineering Group
13430 NW. Freeway, Suite 700
Houston, Tx. 77040
713.462.3178
TxEng Firm 2726 | TxSurv Firm 10110700

SURVEYED BY: KUO & ASSOCIATES, INC.
TBPE FIRM #F-4578; TBPLS FIRM #1007560

THIS DOCUMENT IS RELEASED FOR THE PURPOSE OF REVIEW UNDER THE AUTHORITY OF MARCEL KHOUW, P.E. 101807 ON 12/17/2025. IT IS NOT TO BE USED FOR CONSTRUCTION PURPOSES.

CITY OF HOUSTON
HOUSTON PUBLIC WORKS

LIFT STATION RENEWAL AND REPLACEMENT FY 2023

MISCELLANEOUS DETAILS (SHEET 2 OF 2)

WBS NUMBER	FOR CITY OF HOUSTON USE ONLY
R-000267-0179-4	
DRAWING SCALE	
HORIZ: N.T.S. VERT: N/A	
CITY OF HOUSTON PM	
NAWARAJ PANTA, P.E.	
DWG. NO. C-02	SHEET NO. 277 OF 321

NO.	DATE	REVISION	APP.

FILE PATH: \\idseg.com\FS\Projects\0000\005708500 CoH Lift Stations - FY 2023\CAD\DWG\PRODUCTION\277-MISC DTLS 2 OF 2.dwg

PLOTTED: 12/17/2025 8:40 AM
FILE PATH: \\idseg.com\FS\Projects\0000\005708500 CoH Lift Stations - FY 2023\CAD\DWG\PRODUCTION\278-TYPICAL SAN SWR DETAILS.dwg

NO.	DATE	REVISION	APP.

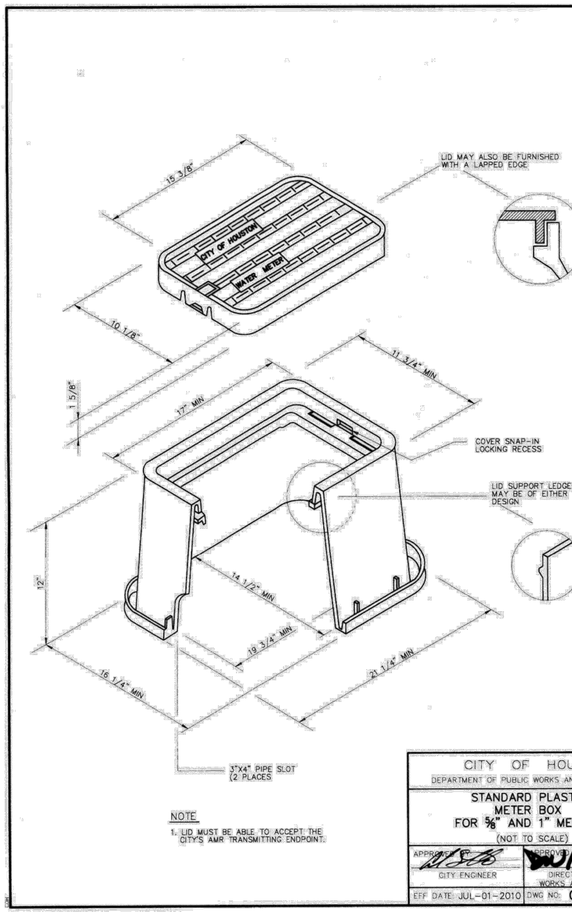

NOTE

1. LID MUST BE ABLE TO ACCEPT THE CITY'S AMR TRANSMITTING ENDPOINT.

CITY OF HOUSTON
DEPARTMENT OF PUBLIC WORKS AND ENGINEERING

STANDARD PLASTIC METER BOX FOR 5/8" AND 1" METERS

(NOT TO SCALE)

APPROVED BY: CITY ENGINEER | APPROVED BY: DIRECTOR OF PUBLIC WORKS AND ENGINEERING

EFF DATE: JUL-01-2010 | DWG NO: 02085-01

TYPE 1
OPEN PICK HOLE

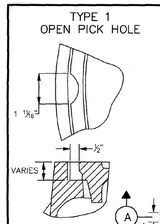

NOTE:
23 1/2" MANHOLE COVER CAN BE USED ONLY FOR REPLACEMENT OF EXISTING MANHOLE COVER.

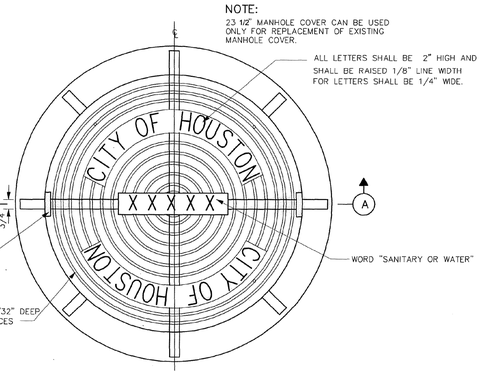

PLAN

23 1/2" MANHOLE COVER WITH FRAME

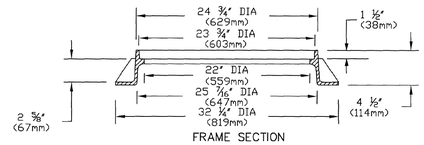

FRAME SECTION

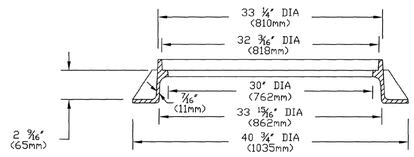

SECTION (A)

32" MANHOLE COVER WITH FRAME

1) NOTE: APPROXIMATE WEIGHTS.
FRAME- 170 LBS 77 kg
COVER- 270 LBS 123 kg
UNIT- 440 LBS 200 kg

2) MATERIAL- GRAY IRON ASTM A48 CL35B

3) CASTING TO MEET M306 PROOF LOAD SPECIFICATION

4) MODEL V-14240 ASY OR APPROVED EQUAL

CITY OF HOUSTON
DEPARTMENT OF PUBLIC WORKS AND ENGINEERING

SANITARY SEWER AND WATER MANHOLE FRAME AND COVER

(NOT TO SCALE)

APPROVED BY: CITY ENGINEER | APPROVED BY: DIRECTOR OF PUBLIC WORKS AND ENGINEERING

EFF DATE: JUL-01-2016 | DWG NO: 02090-01

NOTES:

1. GROUTING OF MANHOLE STRUCTURE ANNULAR SPACE WILL BE PERMITTED IN CASES WHERE INSUFFICIENT WORK SPACE EXISTS FOR PLACEMENT AND COMPACTATION OF CEMENT STABILIZED SAND, PER COH STANDARD SPECIFICATION FOR TUNNEL GROUT.
2. THIS DETAIL ALSO APPLIES TO BACKFILL OF SHAFTS WITHOUT STRUCTURES.
3. ARRANGE PIPE JOINTS AS SHOWN WHEN USING RIGID CONNECTION TO CAST IN PLACE MANHOLE BASE.

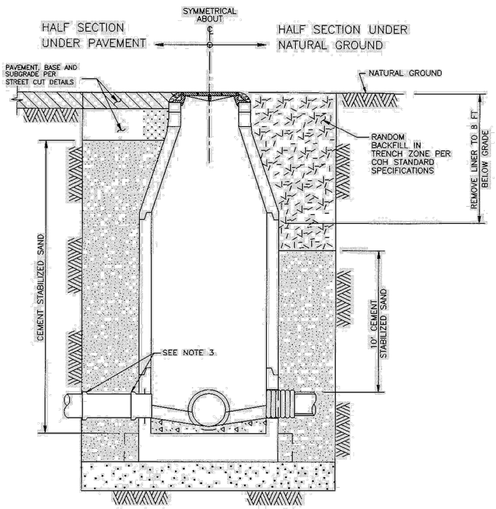

TYPICAL CROSS - SECTION

CITY OF HOUSTON
DEPARTMENT OF PUBLIC WORKS AND ENGINEERING
ENGINEERING, CONSTRUCTION AND REAL ESTATE DIVISION

SANITARY SEWER BACKFILL OF SHAFTS

(NOT TO SCALE)

APPROVED BY: CITY ENGINEER | APPROVED BY: DIRECTOR OF PUBLIC WORKS AND ENGINEERING

EFF DATE: OCT-01-2002 | DWG NO: 02317-08

IDS Engineering Group
13430 NW. Freeway, Suite 700
Houston, Tx. 77040
713.462.3178
TxEng Firm 2726 | TxSurv Firm 10110700

SURVEYED BY: KUO & ASSOCIATES, INC.
TBPE FIRM #F-4578; TBPLS FIRM #1007560

THIS DOCUMENT IS RELEASED FOR THE PURPOSE OF REVIEW UNDER THE AUTHORITY OF MARCEL KHOUW, P.E. 101807 ON 12/17/2025. IT IS NOT TO BE USED FOR CONSTRUCTION PURPOSES.

CITY OF HOUSTON
HOUSTON PUBLIC WORKS

LIFT STATION RENEWAL AND REPLACEMENT FY 2023

TYPICAL SANITARY SEWER DETAILS (SHEET 1 OF 2)

WBS NUMBER	FOR CITY OF HOUSTON USE ONLY
R-000267-0179-4	
DRAWING SCALE	
HORIZ: N.T.S. VERT: N/A	
CITY OF HOUSTON PM	
NAWARAJ PANTA, P.E.	
SHEET NO. 278 OF 321	

DWG. NO. C-03

PLOTTED: 12/17/2025 8:40 AM

FILE PATH: \\idseg.com\FS\Projects\0000\005708500 CoH Lift Stations - FY 2023\CAD\DWG\PRODUCTION\279-TYPICAL SAN SWR DETAILS.dwg

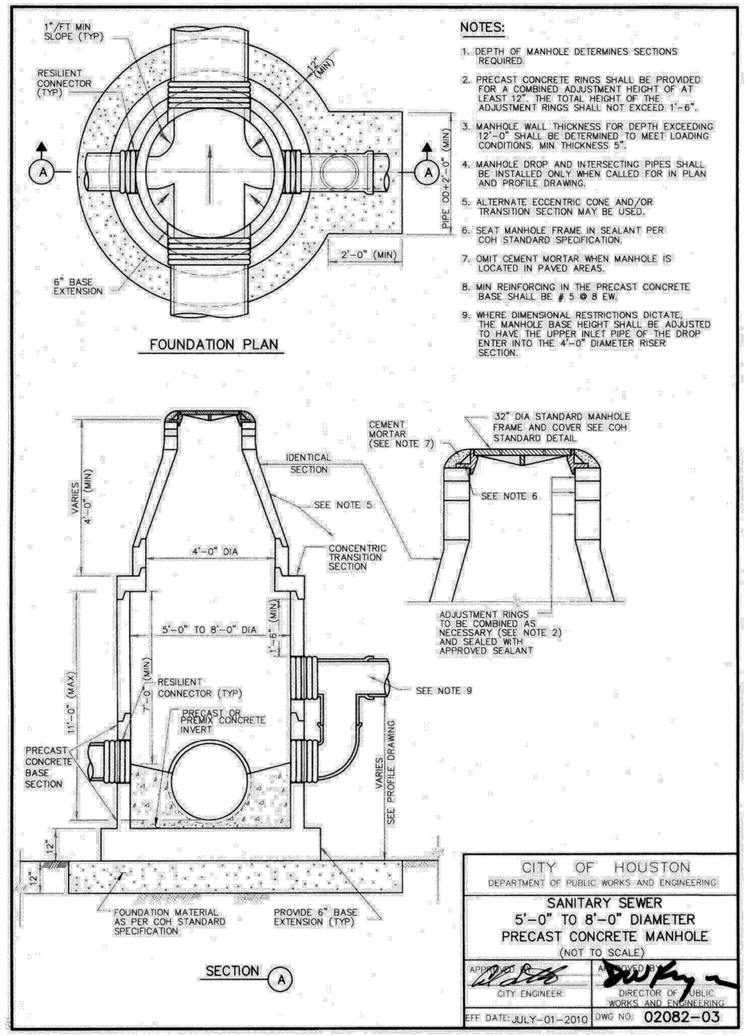

NO.	DATE	REVISION	APP.

IDS Engineering Group
13430 NW. Freeway, Suite 700
Houston, Tx. 77040
713.462.3178
TxEng Firm 2726 | TxSurv Firm 10110700

SURVEYED BY: KUO & ASSOCIATES, INC.
TBPE FIRM #F-4578; TBPLS FIRM #1007560

THIS DOCUMENT IS RELEASED FOR THE PURPOSE OF REVIEW UNDER THE AUTHORITY OF MARCEL KHOUW, P.E. 101807 ON 12/17/2025. IT IS NOT TO BE USED FOR CONSTRUCTION PURPOSES.

CITY OF HOUSTON
HOUSTON PUBLIC WORKS

LIFT STATION RENEWAL AND REPLACEMENT FY 2023

TYPICAL SANITARY SEWER DETAILS (SHEET 2 OF 2)

WBS NUMBER	FOR CITY OF HOUSTON USE ONLY
R-000267-0179-4	
DRAWING SCALE	
HORIZ: N.T.S. VERT: N/A	
CITY OF HOUSTON PM	
NAWARAJ PANTA, P.E.	

DWG. NO.	SHEET NO.
C-04	279 OF 321

DocuSign Envelope ID: 9B122261-CF05-457B-9A65-2650F40B66D5

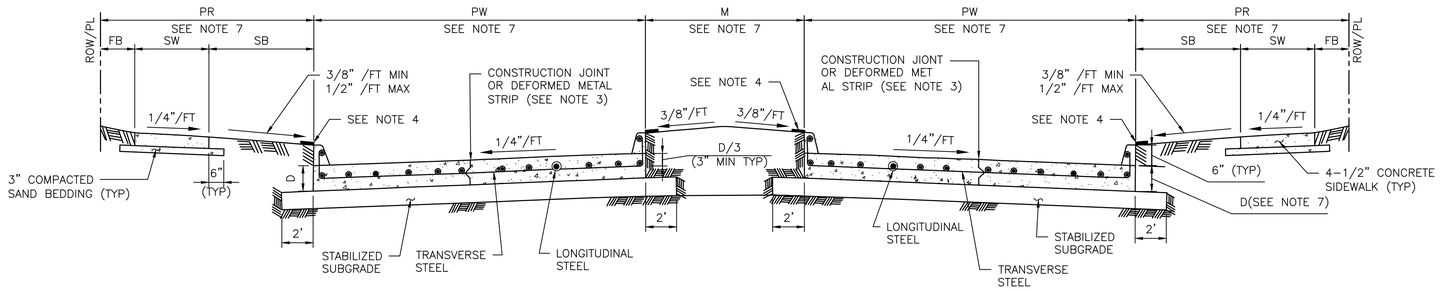

TYPICAL DOUBLE ROADWAY SECTION FOR CONCRETE PAVEMENT WITH CURBS

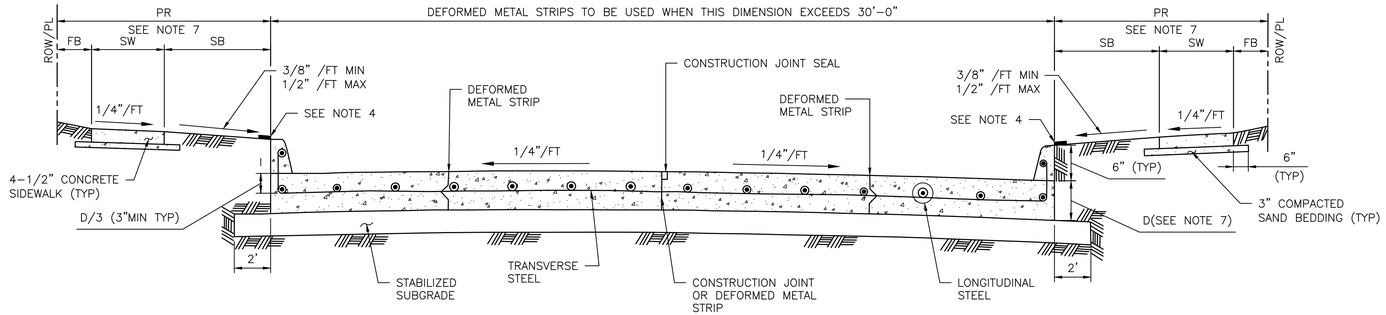

TYPICAL SINGLE ROADWAY SECTION FOR CONCRETE PAVEMENT WITH CURBS

TABLE 1

REINFORCING STEEL BAR SIZES AND SPACINGS FOR VARIOUS PAVEMENT THICKNESSES (D) WITH: MAXIMUM TRANSVERSE CONTROL JOINT SPACING = 20'–0"
MAXIMUM EXPANSION JOINT SPACING = 80'–0"
fc' = 4,000 PSI/28 DAYS AND FY = 60,000 PSI

PAVEMENT THICKNESS 'D' (IN)	PAVEMENT WIDTH 'PW' (FT)	LONGITUDINAL STEEL									TRAVERSE STEEL		
		#4 BARS			#5 BARS			#6 BARS			#4 BARS	#5 BARS	#6 BARS
		NUMBER OF BARS	SPACING (IN)	END BAR SPACING (IN)	NUMBER OF BARS	SPACING (IN)	END BAR SPACING (IN)	NUMBER OF BARS	SPACING (IN)	END BAR SPACING (IN)	SPACING (IN)	SPACING (IN)	SPACING (IN)
6	28	17	20.50	4.00	–	–	–	–	–	–	36	–	–
7	25	17	18.25	4.00	–	–	–	–	–	–	36	–	–
7	35	24	18.00	3.00	–	–	–	–	–	–	36	–	–
7	36	25	17.75	3.00	–	–	–	–	–	–	36	–	–
7	37	25	18.25	3.00	–	–	–	–	–	–	36	–	–
7	41	28	18.00	3.00	–	–	–	–	–	–	36	–	–
7	45	31	17.75	3.75	–	–	–	–	–	–	36	–	–
8	25	20	15.50	2.75	13	24.50	3.0	–	–	–	36	36	–
8	34	27	15.50	2.50	17	25.00	4.0	–	–	–	36	36	–
8	35	27	16.00	2.00	18	24.25	4.0	–	–	–	36	36	–
8	36	28	15.75	3.25	18	25.00	3.0	–	–	–	30	36	–
8	44	24	15.75	4.00	22	24.75	4.0	–	–	–	30	36	–
8	45	35	15.75	2.25	23	24.25	3.0	–	–	–	30	36	–
9	25	22	14.00	3.00	14	22.50	4.0	–	–	–	36	36	–
9	34	31	13.50	2.00	19	22.25	3.5	–	–	–	30	36	–
9	35	31	13.75	3.75	20	21.75	3.5	–	–	–	30	36	–
9	36	32	13.75	3.00	21	21.25	3.5	–	–	–	30	36	–
9	44	39	13.75	2.75	25	21.75	3.0	–	–	–	24	36	–
9	45	39	14.00	4.00	26	21.25	4.5	–	–	–	24	36	–
10	25	24	12.75	3.50	17	18.25	4.0	–	–	–	36	36	36
10	34	33	12.50	4.00	21	20.00	4.0	–	–	–	30	36	36
10	35	34	12.50	3.75	23	18.75	4.0	–	–	–	30	36	36
10	36	35	12.50	3.50	24	18.50	3.0	–	–	–	30	36	36
10	44	44	12.00	4.00	29	18.50	4.5	–	–	–	24	36	36
10	45	44	12.50	3.00	29	19.00	3.0	–	–	–	24	36	36
11	25	27	11.25	3.00	17	18.25	4.0	12	26.75	3	36	36	36
11	34	36	11.50	2.75	24	17.50	2.5	17	25.00	4	24	36	36
11	35	37	11.50	3.00	24	18.00	3.0	17	25.75	4	24	36	36
11	36	40	11.00	2.00	25	17.75	3.0	17	26.50	4	24	36	36
11	44	48	11.125	2.50	30	18.00	3.0	21	26.00	4	24	36	36
11	45	49	11.125	3.00	31	17.75	4.0	22	25.50	3	24	36	36
12	25	–	–	–	19	16.25	4.0	13	24.50	3	36	36	36
12	34	–	–	–	26	16.00	4.0	18	23.50	4	24	36	36
12	35	–	–	–	26	16.50	4.0	19	23.00	3	24	36	36
12	36	–	–	–	27	16.25	4.5	20	22.25	4.5	24	36	36
12	44	–	–	–	33	16.25	4.0	24	22.50	5	24	30	36
12	45	–	–	–	35	15.75	3.0	25	22.25	3	24	30	36

MINIMUM LAP LENGTH (L):
A. # 4 BARS ; L = 22 INCHES
B. # 5 BARS ; L = 27 INCHES
C. # 6 BARS ; L = 32 INCHES

NOTES:

1. THE MAXIMUM WIDTH BETWEEN LONGITUDINAL JOINTS SHALL NOT EXCEED 15'–0".
2. ALL EARTHEN AREAS ARE TO BE HYDROMULCHED UNLESS SHOWN OTHERWISE ON DRAWINGS.
3. CONTRACTOR MAY SAW CUT IN LIEU OF DEFORMED METAL STRIP.
4. USE STRIP OF SOD GRASS TO PREVENT EROSION UNTIL STAND OF GRASS IS ESTABLISHED.
5. AN EQUAL OR LARGER AREA OF WELDED REINFORCEMENT BAR CONFORMING TO ASTM A497, MAY BE SUBSTITUTED FOR REBARS LISTED IN TABLE 1.
6. IF AVAILABLE ROW IS NOT SUFFICIENT TO ACCOMMODATE SIDEWALK WIDTH (SW) ACCORDING TO IDM REQUIREMENTS, ENGINEER SHALL OBTAIN A VARIANCE FROM THE CITY ENGINEER.
7. REFER TO CONTRACT DRAWINGS FOR PAVEMENT WIDTH (PW) AND PAVEMENT THICKNESS (D), MEDIAN (M), PEDESTRIAN REALM (PR), SIDEWALK (SW), FRONTAGE BUFFER (FB), AND SAFETY BUFFER (SB) WIDTHS.

APPROVED BY:	APPROVED BY:
DocuSigned by: Suhail Kanwar 9EF8B0C541F5478...	DocuSigned by: KHANG NGUYEN 95A29EFDA758C4CD...
CITY ENGINEER	CITY TRAFFIC ENGINEER
APPROVED BY: DocuSigned by: A83C41087283453...	
DIRECTOR OF HOUSTON PUBLIC WORKS	
EFF DATE: NOV–27–2023	DWG NO: 02751–01

IDS Engineering Group
13430 NW. Freeway, Suite 700
Houston, Tx. 77040
713.462.3178
TxEng Firm 2726 | TxSurv Firm 10110700

SURVEYED BY: KUO & ASSOCIATES, INC.
TBPE FIRM #F–4579; TBPLS FIRM #1007560

CITY OF HOUSTON
HOUSTON PUBLIC WORKS STANDARD

LIFT STATION RENEWAL AND REPLACEMENT FY 2023

CONCRETE PAVEMENT DETAILS

WBS NUMBER	FOR CITY OF HOUSTON USE ONLY
R–000267–0179–3	
DRAWING SCALE	
NOT TO SCALE	
CITY OF HOUSTON PM	
NAWARAJ PANTA, P.E.	
DWG. NO. C–05	SHEET NO. 280 OF 321

DISCLAIMER:
THE USE OF THIS STANDARD IS GOVERNED BY THE TEXAS ENGINEERING PRACTICE ACT. THE DESIGN REQUIREMENTS ON THIS STANDARD DO NOT PURPORT TO ADDRESS ALL OF THE SAFETY CONCERNS ASSOCIATED WITH THEIR USE. THE ENGINEER OF RECORD (EOR) IS TO REVIEW THESE DESIGN REQUIREMENTS AND BY AUTHORIZING THEIR USE; ACCEPTS RESPONSIBILITY FOR THEIR APPLICABILITY, ADEQUACY AND SAFETY. NO WARRANTY OF ANY KIND IS MADE BY THE CITY OF HOUSTON FOR ANY PURPOSES WHATSOEVER. THE CITY OF HOUSTON ASSUMES NO RESPONSIBILITY FOR INCORRECT RESULTS OR DAMAGES RESULTING FROM ITS USE.
FILE PATH: \\idseg.com\FS\Projects\0000\005708500 CoH Lift Stations – FY 2023\CAD\DWG\PRODUCTION\280–CONC PVMT DTLS.dwg

DocuSign Envelope ID: 9B122261-CF05-457B-9A65-2650F40B66D5

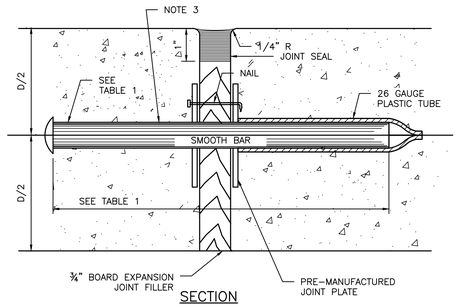

SECTION

DOWEL TYPE EXPANSION JOINT

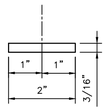

PLAN VIEW

JOINT PLATE

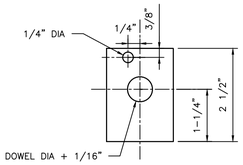

ELEVATION VIEW

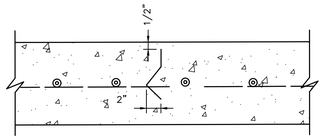

SECTION

DEFORMED METAL STRIP

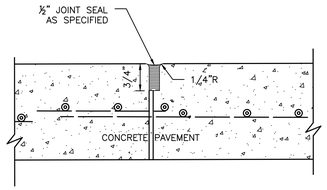

SECTION

CONSTRUCTION JOINT SEAL

TABLE 1

PAVEMENT THICKNESS (IN)	DOWEL SIZES AND SPACINGS		
	DIAMETER (IN)	LENGTH (IN)	SPACING (IN)
6	3/4	18	12
7	1	18	12
8	1	18	12
9	1 1/4	18	12
10	1 1/4	18	12
11	1 1/4	18	12
12	1 1/4	18	12

NOTES:

1. STEEL TO MEET ASTM STANDARD SPECIFICATIONS FOR CONCRETE REI BARS. UNITS TO BE SPACED 12" C CENTER.
2. EXPANSION JOINT TO BE PLACED A OF EACH CURB RADIUS.
3. CENTER DOWEL HORIZONTALLY ON
4. CENTER DOWEL VERTICALLY IN CON BASE. EXTEND THICKENED CONCRET NEEDED TO MAINTAIN 3" MIN COVE
5. CITY OF HOUSTON APPROVED PROD BE USED AS JOINT PLATE ALTERNA

CITY OF HOUSTON
HOUSTON PUBLIC WORKS STANDARD

PAVEMENT EXPANSION AND CONSTRUCTION JOINT DETAILS

(SCALE: NOT TO SCALE)

DocuSigned by: Sukait Kahiwar — CITY ENGINEER
DocuSigned by: HANG NGUYEN — CITY TRAFFIC ENGINEER
DocuSigned by: Carl Haddock — DIRECTOR OF HPW

EFF DATE: NOV-27-2023 | DWG NO: 02752-01

DISCLAIMER:
THE USE OF THIS STANDARD IS GOVERNED BY THE TEXAS ENGINEERING PRACTICE ACT. THE DESIGN REQUIREMENTS ON THIS STANDARD DO NOT PURPORT TO ADDRESS ALL OF THE SAFETY CONCERNS ASSOCIATED WITH ITS USE. ANY ENGINEER WHO ADOPTS THIS STANDARD IS RESPONSIBLE FOR THE DESIGN IT PREPARES USING THIS STANDARD AND MUST EXERCISE THE PROFESSIONAL JUDGMENT REQUIRED OF A DESIGN PROFESSIONAL IN ITS USE. ACCEPTS RESPONSIBILITY FOR THEIR APPLICABILITY, ADEQUACY AND SAFETY. NO WARRANTY OF ANY KIND IS MADE BY THE CITY OF HOUSTON FOR ANY PURPOSES WHATSOEVER. THE CITY OF HOUSTON ASSUMES NO RESPONSIBILITY FOR INCORRECT RESULTS OR DAMAGES RESULTING FROM ITS USE.
FILE PATH: \\idseg.com\FS\Projects\0000\005708500 CoH Lift Stations - FY 2023\CAD\DWG\PRODUCTION\281-CONSTR JOINT DTLS.dwg

DocuSign Envelope ID: 9B122261-CF05-457B-9A65-2650F40B66D5

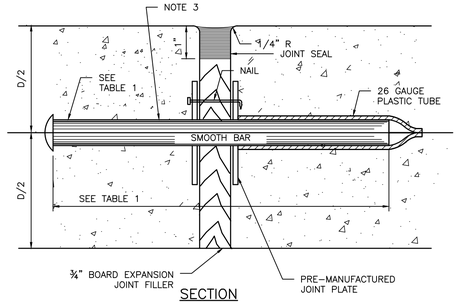

SECTION

DOWEL TYPE EXPANSION JOINT

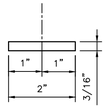

PLAN VIEW

JOINT PLATE

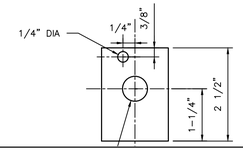

ELEVATION VIEW

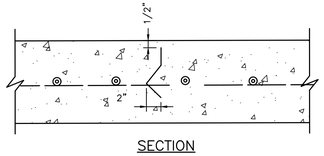

SECTION

DEFORMED METAL STRIP

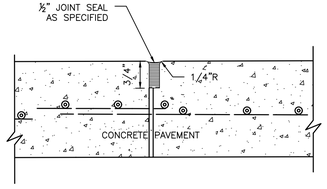

SECTION

CONSTRUCTION JOINT SEAL

TABLE 1

PAVEMENT THICKNESS (IN)	DOWEL SIZES AND SPACINGS		
	DIAMETER (IN)	LENGTH (IN)	SPACING (IN)
6	3/4	18	12
7	1	18	12
8	1	18	12
9	1 1/4	18	12
10	1 1/4	18	12
11	1 1/4	18	12
12	1 1/4	18	12

NOTES:

1. STEEL TO MEET ASTM STANDARD SPECIFICATIONS FOR CONCRETE REI BARS. UNITS TO BE SPACED 12" C CENTER.
2. EXPANSION JOINT TO BE PLACED A OF EACH CURB RADIUS.
3. CENTER DOWEL HORIZONTALLY ON
4. CENTER DOWEL VERTICALLY IN CON BASE. EXTEND THICKENED CONCRET NEEDED TO MAINTAIN 3" MIN COVE
5. CITY OF HOUSTON APPROVED PROD BE USED AS JOINT PLATE ALTERNA

CITY OF HOUSTON
HOUSTON PUBLIC WORKS STANDARD

SIDEWALK EXPANSION AND CONSTRUCTION JOINT DETAILS

(SCALE: NOT TO SCALE)

DocuSigned by: Sukait Kahiwar — CITY ENGINEER
DocuSigned by: HANG NGUYEN — CITY TRAFFIC ENGINEER
DocuSigned by: Carl Haddock — DIRECTOR OF HPW

EFF DATE: NOV-27-2023 | DWG NO: 02752-02

DISCLAIMER:
THE USE OF THIS STANDARD IS GOVERNED BY THE TEXAS ENGINEERING PRACTICE ACT. THE DESIGN REQUIREMENTS ON THIS STANDARD DO NOT PURPORT TO ADDRESS ALL OF THE SAFETY CONCERNS ASSOCIATED WITH ITS USE. ANY ENGINEER WHO ADOPTS THIS STANDARD IS RESPONSIBLE FOR THE DESIGN IT PREPARES USING THIS STANDARD AND MUST EXERCISE THE PROFESSIONAL JUDGMENT REQUIRED OF A DESIGN PROFESSIONAL IN ITS USE. ACCEPTS RESPONSIBILITY FOR THEIR APPLICABILITY, ADEQUACY AND SAFETY. NO WARRANTY OF ANY KIND IS MADE BY THE CITY OF HOUSTON FOR ANY PURPOSES WHATSOEVER. THE CITY OF HOUSTON ASSUMES NO RESPONSIBILITY FOR INCORRECT RESULTS OR DAMAGES RESULTING FROM ITS USE.
FILE PATH: \\idseg.com\FS\Projects\0000\005708500 CoH Lift Stations - FY 2023\CAD\DWG\PRODUCTION\281-CONSTR JOINT DTLS.dwg

NO.	DATE	REVISION	APP.

IDS Engineering Group
13430 NW. Freeway, Suite 700
Houston, Tx. 77040
713.462.3178
TxEng Firm 2726 | TxSurv Firm 10110700

SURVEYED BY: KUO & ASSOCIATES, INC.
TBPE FIRM #F-4578; TBPLS FIRM #1007560

THIS DOCUMENT IS RELEASED FOR THE PURPOSE OF REVIEW UNDER THE AUTHORITY OF MARCEL KHOUW, P.E. 101807 ON 12/17/2025. IT IS NOT TO BE USED FOR CONSTRUCTION PURPOSES.

CITY OF HOUSTON
HOUSTON PUBLIC WORKS

LIFT STATION RENEWAL AND REPLACEMENT FY 2023

CONSTRUCTION JOINT DETAILS

WBS NUMBER	FOR CITY OF HOUSTON USE ONLY
R-000267-0179-4	
DRAWING SCALE	
HORIZ: N.T.S. VERT: N/A	
CITY OF HOUSTON PM	
NAWARAJ PANTA, P.E.	
SHEET NO. 281 OF 321	

DWG. NO. C-06

PLOTTED: 12/17/2025 8:40 AM
FILE PATH: \\idseg.com\FS\Projects\0000\005708500 CoH Lift Stations - FY 2023\CAD\DWG\PRODUCTION\281-CONSTR JOINT DTLS.dwg

DocuSign Envelope ID: 9B122261-CF05-457B-9A65-2650F40B66D5

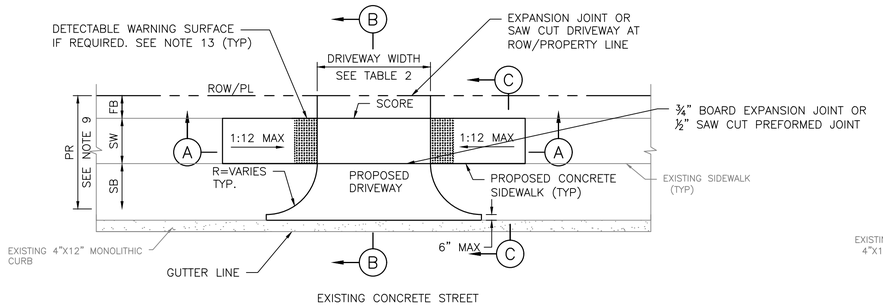

PLAN VIEW
DRIVEWAY

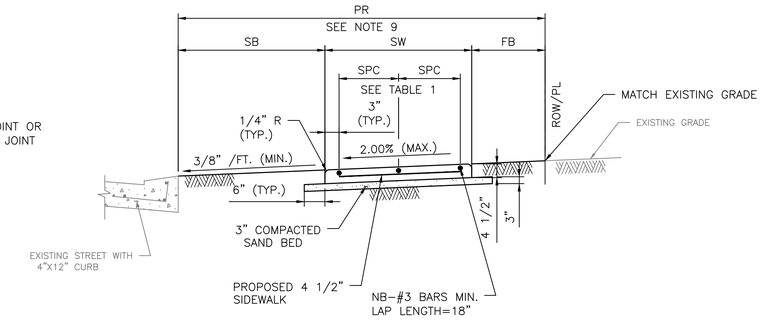

SECTION C–C
TYPICAL SIDEWALK SECTION

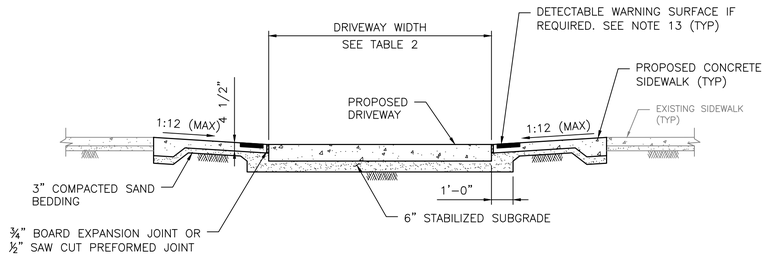

SECTION A–A
PROPOSED SIDEWALK, THROUGH DRIVEWAY WITH EXCESSIVE GRADES

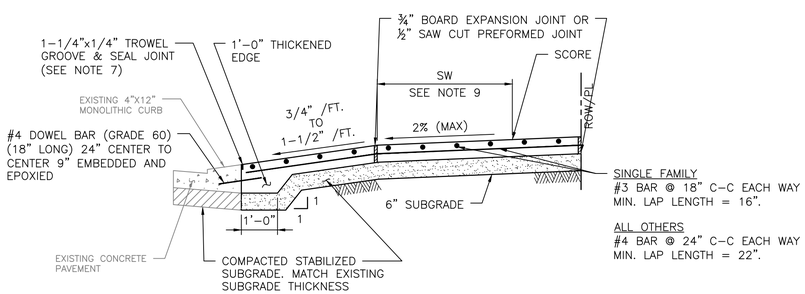

SECTION B–B
TYPICAL DRIVEWAY SECTION

NOTES:

1. REPAIR, RECONSTRUCTION OR REPLACEMENT OF SIDEWALKS SHALL MEET PERMITTING REQUIREMENTS OF CODE OF ORDINANCES SECTION 40–552.
2. FOR REPAIR, RECONSTRUCTION, OR REPLACEMENT OF EXISTING SIDEWALKS:
   - 2.1. EXISTING SIDEWALKS LESS THAN OR EQUAL TO 20 FEET IN TOTAL LENGTH:
     - 2.1.1. THE PROPOSED SIDEWALK WIDTH WILL BE ALLOWED TO MATCH THE EXISTING SIDEWALK.
   - 2.2. EXISTING SIDEWALKS GREATER THAN 20 FEET IN TOTAL LENGTH:
     - 2.2.1. THE SIDEWALK WIDTH FOR THE ENTIRE PROPERTY WIDTH SHALL BE IMPROVED TO MEET WIDTH REQUIREMENTS ACCORDING TO THE LATEST INFRASTRUCTURE DESIGN MANUAL.
   - 2.3. 20 FOOT TOTAL LENGTH IS DEFINED AS:
     - 2.3.1. UP TO 10 FEET ON BOTH SIDES OF THE DRIVEWAY; OR
     - 2.3.2. UP TO 20 FEET WHEN SIDEWALK AFFECTED IS LOCATED ONLY ON ONE SIDE OF THE DRIVEWAY.
3. IF AVAILABLE ROW IS NOT SUFFICIENT TO ACCOMMODATE SIDEWALK WIDTH (SW) ACCORDING TO IDM REQUIREMENTS, ENGINEER SHALL OBTAIN A VARIANCE FROM THE CITY ENGINEER.
4. DRIVEWAYS SHALL BE 6" THICK FOR SINGLE FAMILY OR DUPLEXES.
5. DRIVEWAYS AND SIDEWALKS SHALL BE CONSTRUCTED WITH PORTLAND CEMENT CONCRETE AND INCLUDE 5 1/2 SACKS OF CEMENT PER CUBIC YARD OF CONCRETE.
6. THE OUTER DOWEL BARS ARE TO BE LOCATED 12" FROM END OF PROPOSED EDGE OF DRIVEWAY RETURN. EXTEND DOWEL 3" INCHES INTO PROPOSED DRIVEWAY AND BEND REMAINING BAR TO EXTEND TO RADIUS RETURN BOTH SIDES.
7. TROWEL GROOVE SEALANT SHALL BE LOW MODULUS SILICONE OR POLYURETHANE SEALANT.
8. ALL JOINTS ALONG THE SIDEWALK SHALL BE CONSTRUCTED ACCORDING TO DRAWING 02752–02 AND SPECIFICATION 02752.
9. REFER TO CONTRACT DRAWINGS FOR PEDESTRIAN REALM (PR), SIDEWALK (SW), FRONTAGE BUFFER (FB), AND SAFETY BUFFER (SB) WIDTHS.
10. CEMENT STABILIZED SAND 1.5 SACKS OF CEMENT PER TON OF DRY SAND.
11. ALL RAMPS AND SIDEWALKS/WALKWAYS SHALL BE CONSTRUCTED IN ACCORDANCE WITH HOUSTON PUBLIC WORKS STANDARDS, TEXAS ACCESSIBILITY STANDARDS (TAS) AND AMERICANS WITH DISABILITIES ACT (ADA) REQUIREMENTS. IF THERE IS A CONFLICT IN THE REQUIREMENTS, THE STRICTEST REQUIREMENTS SHALL GOVERN.
12. CURB RAMPS THAT ARE STEEPER THAN A 1:12 MAX SLOPE WILL NOT BE ACCEPTED BY THE CITY OF HOUSTON.
13. DETECTABLE WARNING SURFACES:
    - 13.1. SIDEWALK SHALL HAVE A DETECTABLE WARNING SURFACE WHERE:
      - 13.1.1. SIDEWALK INTERSECTS TYPE C DRIVEWAYS (COMMERCIAL DRIVEWAYS) THAT ARE STOP, YIELD OR TRAFFIC SIGNAL CONTROLLED; OR
      - 13.1.2. SIDEWALK SLOPE IS GREATER THAN 1:20 AND INTERSECTS A TYPE C DRIVEWAY (COMMERCIAL DRIVEWAY)
    - 13.2. DETECTABLE WARNING SURFACES ARE OPTIONAL WHERE SIDEWALKS INTERSECT TYPE A DRIVEWAYS (SINGLE FAMILY RESIDENTIAL HOUSES OR DUPLEXES) OR TYPE B DRIVEWAYS (SHARED ACCESS/SHARED DRIVEWAYS).
    - 13.3. REFER TO STANDARD DETAILS 02775–06 TO 02775–07 FOR DETECTABLE WARNING SURFACE STANDARDS.

TABLE 1

REINFORCING STEEL INFORMATION
FOR 4 ½ " THICK SIDEWALKS
EXPANSION JOINT SPACING = 40 FT
fc' = 3,500 PSI AND fy = 60,000 PSI
REFER TO CONTRACT DRAWINGS FOR SIDEWALKS WIDER THAN 6 FEET.

SIDEWALK THICKNESS (IN)	SIDEWALK WIDTH (FT)	LONGITUDINAL STEEL			TRANSVERSE STEEL #3 BARS SPACING (IN)
		#3 BARS			
		NO. OF BARS "NB"	SPACING "SPC" (IN)	END BAR SPACING (IN)	
4.5	5	3	27	3	48
4.5	6	4	22	3	48

TABLE 2

DRIVEWAY DESIGN CRITERIA (1)(2)

TRAFFIC TYPE	TYPE A DRIVEWAY (FOR SINGLE FAMILY RESIDENTIAL HOUSES OR DUPLEXES)				TYPE B DRIVEWAY (SHARED ACCESS/SHARED DRIVEWAY)				TYPE C DRIVEWAY (COMMERCIAL DRIVEWAY)			
	WIDTH (FT)		RADIUS (FT)		WIDTH (FT)		RADIUS (FT)		WIDTH (FT)		RADIUS (FT)	
	MIN	MAX	MIN	MAX	MIN	MAX	MIN	MAX	MIN	MAX	MIN	MAX
ONE–WAY	10	12	4	10	12(5)	16(5)	4(5)	10(5)	15	20	10	20
TWO–WAY	10(3)	24(4)	4	10	16(6)	24	4	10	24	35	10	20

(1) REFER TO INFRASTRUCTURE DESIGN MANUAL ARTICLE 15.2.07.C.1.F FOR DRIVEWAYS THAT REQUIRE A VEHICLE SWEPT PATH ANALYSIS.
(2) REFER TO INFRASTRUCTURE DESIGN MANUAL ARTCILES 15.2.07.C.1.G.(1) AND 15.2.07.C.1.G.(2) FOR TYPE 1 PAE AND TYPE 2 PAE REQUIREMENTS.
(3) THE MINIMUM WIDTH FOR JOINT ACCESS DRIVEWAY IS 12 FT.
(4) REFER TO CHAPTER 42 OF THE CODE OF ORDINANCES FOR DRIVEWAY WIDTHS FOR NARROW LOTS.
(5) ONLY MURS AND COURTYARD STYLE DEVELOPMENTS ON CORNER LOTS CAN HAVE ONE–WAY DRIVEWAYS.
(6) REFER TO CHAPTER 42, SECTION 42–146 OF THE CODE OF ORDINANCES FOR EXCEPTIONS TO THE MINIMUM DRIVEWAY WIDTH FOR SHARED DRIVEWAYS.

APPROVED BY:	APPROVED BY:
DocuSigned by: Suhail Kanwar 9EFB80C541F5478...	DocuSigned by: KHANG NGUYEN 95A29EFDA75B4CD...
CITY ENGINEER	CITY TRAFFIC ENGINEER
APPROVED BY: DocuSigned by: Curtis Haddock A83C41067253453...	
DIRECTOR OF HOUSTON PUBLIC WORKS	
EFF DATE: NOV–27–2023	DWG NO: 02754–01A

IDS Engineering Group
13430 NW. Freeway, Suite 700
Houston, Tx. 77040
713.462.3178
TxEng Firm 2726 | TxSurv Firm 10110700

SURVEYED BY: KUO & ASSOCIATES, INC.
TBPE FIRM #F–4579; TBPLS FIRM #1007560

CITY OF HOUSTON
HOUSTON PUBLIC WORKS STANDARD

LIFT STATION RENEWAL AND REPLACEMENT FY 2023

DRIVEWAY DETAIL WITH 4"x12" CURB FOR LOCAL RESIDENTIAL STREETS

WBS NUMBER	FOR CITY OF HOUSTON USE ONLY
R–000267–0179–3	
DRAWING SCALE	
NOT TO SCALE	
CITY OF HOUSTON PM	
NAWARAJ PANTA, P.E.	
SHEET NO. 282 OF 321	

DWG. NO. C–07

DISCLAIMER:
THE USE OF THIS STANDARD IS GOVERNED BY THE TEXAS ENGINEERING PRACTICE ACT. THE DESIGN REQUIREMENTS ON THIS STANDARD DO NOT PURPORT TO ADDRESS ALL OF THE SAFETY CONCERNS ASSOCIATED WITH THEIR USE. THE ENGINEER OF RECORD (EOR) IS TO REVIEW THESE DESIGN REQUIREMENTS AND BY AUTHORIZING THEIR USE; ACCEPTS RESPONSIBILITY FOR THEIR APPLICABILITY, ADEQUACY AND SAFETY. NO WARRANTY OF ANY KIND IS MADE BY THE CITY OF HOUSTON FOR ANY PURPOSES WHATSOEVER. THE CITY OF HOUSTON ASSUMES NO RESPONSIBILITY FOR INCORRECT RESULTS OR DAMAGES RESULTING FROM ITS USE.
FILE PATH: \\idseg.com\FS\Projects\0000\005708500 CoH Lift Stations – FY 2023\CAD\DWG\PRODUCTION\282–DRIVEWAY DETAILS.dwg

DocuSign Envelope ID: 9B122261-CF05-457B-9A65-2650F40B66D5

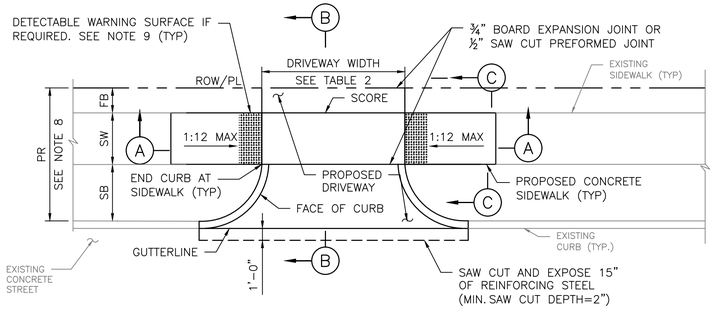

PLAN VIEW
DRIVEWAY

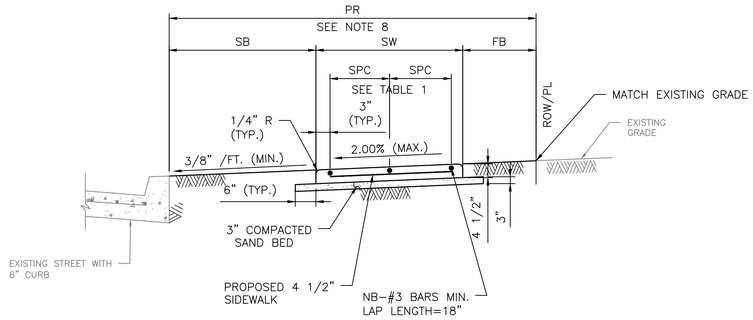

SECTION C–C
TYPICAL SIDEWALK SECTION

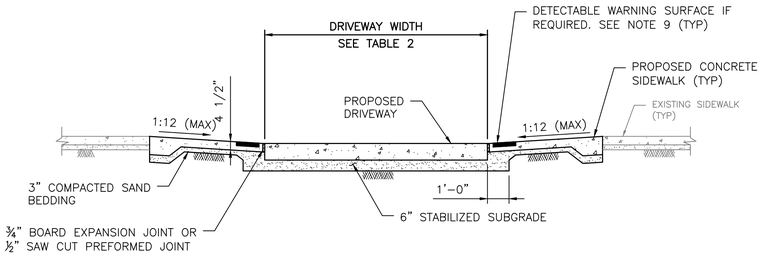

SECTION A–A
PROPOSED SIDEWALK THROUGH DRIVEWAY
WITH EXCESSIVE ELEVATION DIFFERENCE
WITH EXISTING SIDEWALK

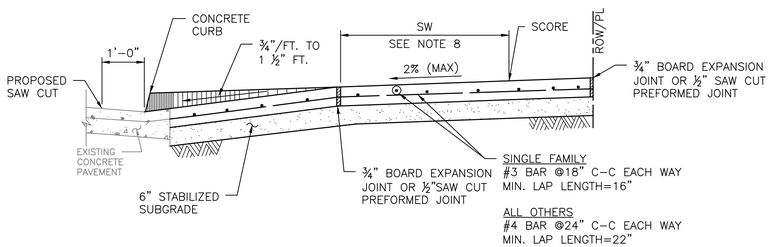

SECTION B–B
TYPICAL DRIVEWAY SECTION

NOTES:

1. REPAIR, RECONSTRUCTION OR REPLACEMENT OF SIDEWALKS SHALL MEET PERMITTING REQUIREMENTS OF CODE OF ORDINANCES SECTION 40–552.
2. FOR REPAIR, RECONSTRUCTION, OR REPLACEMENT OF EXISTING SIDEWALKS:
   - 2.1. EXISTING SIDEWALKS LESS THAN OR EQUAL TO 20 FEET IN TOTAL LENGTH:
     - 2.1.1. THE PROPOSED SIDEWALK WIDTH WILL BE ALLOWED TO MATCH THE EXISTING SIDEWALK.
   - 2.2. EXISTING SIDEWALKS GREATER THAN 20 FEET IN TOTAL LENGTH:
     - 2.2.1. THE SIDEWALK WIDTH FOR THE ENTIRE PROPERTY WIDTH SHALL BE IMPROVED TO MEET WIDTH REQUIREMENTS ACCORDING TO THE LATEST INFRASTRUCTURE DESIGN MANUAL.
   - 2.3. 20 FOOT TOTAL LENGTH IS DEFINED AS:
     - 2.3.1. UP TO 10 FEET ON BOTH SIDES OF THE DRIVEWAY; OR
     - 2.3.2. UP TO 20 FEET WHEN SIDEWALK AFFECTED IS LOCATED ONLY ON ONE SIDE OF THE DRIVEWAY.
3. ALL JOINTS ALONG THE SIDEWALK SHALL BE CONSTRUCTED ACCORDING TO DRAWING 02752–02 AND SPECIFICATION 02752.
4. DRIVEWAYS SHALL BE MINIMUM 6" THICK FOR SINGLE FAMILY AND DUPLEXES. DRIVEWAYS SHALL BE MINIMUM 7" THICK FOR ALL OTHERS (I.E. COMMERCIAL, INDUSTRIAL, ETC.)
5. DRIVEWAYS AND SIDEWALKS SHALL BE CONSTRUCTED WITH PORTLAND CEMENT CONCRETE AND INCLUDE 5 1/2 SACKS OF CEMENT PER CUBIC YARD OF CONCRETE.
6. ALL RAMPS AND SIDEWALKS/WALKWAYS SHALL BE CONSTRUCTED IN ACCORDANCE WITH HOUSTON PUBLIC WORKS STANDARDS, TEXAS ACCESSIBILITY STANDARDS (TAS) AND AMERICANS WITH DISABILITIES ACT (ADA) REQUIREMENTS. IF THERE IS A CONFLICT IN THE REQUIREMENTS, THE STRICTEST REQUIREMENTS SHALL GOVERN.
7. CURB RAMPS THAT ARE STEEPER THAN A 1:12 MAX SLOPE WILL NOT BE ACCEPTED BY THE CITY OF HOUSTON.
8. REFER TO CONTRACT DRAWINGS FOR PEDESTRIAN REALM (PR), SIDEWALK (SW), FRONTAGE BUFFER (FB), AND SAFETY BUFFER (SB) WIDTHS.
9. DETECTABLE WARNING SURFACES:
   - 9.1. SIDEWALK SHALL HAVE A DETECTABLE WARNING SURFACE WHERE:
     - 9.1.1. SIDEWALK INTERSECTS TYPE C DRIVEWAYS (COMMERCIAL DRIVEWAYS) THAT ARE STOP, YIELD, OR TRAFFIC SIGNAL CONTROLLED; OR
     - 9.1.2. SIDEWALK SLOPE IS GREATER THAN 1:20 AND INTERSECTS A TYPE C DRIVEWAY (COMMERCIAL DRIVEWAY)
   - 9.2. DETECTABLE WARNING SURFACES ARE OPTIONAL WHERE SIDEWALKS INTERSECT TYPE A DRIVEWAYS (SINGLE FAMILY RESIDENTIAL HOUSES OR DUPLEXES) OR TYPE B DRIVEWAYS (SHARED ACCESS/SHARED DRIVEWAYS).
   - 9.3. REFER TO STANDARD DETAILS 02775–06 TO 02775–07 FOR DETECTABLE WARNING SURFACE STANDARDS.

TABLE 1

REINFORCING STEEL INFORMATION
FOR 4 ½ " THICK SIDEWALKS
EXPANSION JOINT SPACING = 40 FT
fc' = 3,500 PSI AND fy = 60,000 PSI
REFER TO CONTRACT DRAWINGS FOR SIDEWALKS WIDER THAN 6 FEET.

SIDEWALK THICKNESS (IN)	SIDEWALK WIDTH (FT)	LONGITUDINAL STEEL			TRANSVERSE STEEL #3 BARS SPACING (IN)
		#3 BARS			
		NO. OF BARS "NB"	SPACING "SPC" (IN)	END BAR SPACING (IN)	
4.5	5	3	27	3	48
4.5	6	4	22	3	48

TABLE 2

DRIVEWAY DESIGN CRITERIA (1)(2)

TRAFFIC TYPE	TYPE A DRIVEWAY (FOR SINGLE FAMILY RESIDENTIAL HOUSES OR DUPLEXES)				TYPE B DRIVEWAY (SHARED ACCESS/SHARED DRIVEWAY)				TYPE C DRIVEWAY (COMMERCIAL DRIVEWAY)			
	WIDTH (FT)		RADIUS (FT)		WIDTH (FT)		RADIUS (FT)		WIDTH (FT)		RADIUS (FT)	
	MIN	MAX	MIN	MAX	MIN	MAX	MIN	MAX	MIN	MAX	MIN	MAX
ONE–WAY	10	12	4	10	12(5)	16(5)	4(5)	10(5)	15	20	10	20
TWO–WAY	10(3)	24(4)	4	10	16(6)	24	4	10	24	35	10	20

(1) REFER TO INFRASTRUCTURE DESIGN MANUAL ARTICLE 15.2.07.C.1.F FOR DRIVEWAYS THAT REQUIRE A VEHICLE SWEPT PATH ANALYSIS.
(2) REFER TO INFRASTRUCTURE DESIGN MANUAL ARTCILES 15.2.07.C.1.G.(1) AND 15.2.07.C.1.G.(2) FOR TYPE 1 PAE AND TYPE 2 PAE REQUIREMENTS.
(3) THE MINIMUM WIDTH FOR JOINT ACCESS DRIVEWAY IS 12 FT.
(4) REFER TO CHAPTER 42 OF THE CODE OF ORDINANCES FOR DRIVEWAY WIDTHS FOR NARROW LOTS.
(5) ONLY MURS AND COURTYARD STYLE DEVELOPMENTS ON CORNER LOTS CAN HAVE ONE–WAY DRIVEWAYS.
(6) REFER TO CHAPTER 42, SECTION 42–146 OF THE CODE OF ORDINANCES FOR EXCEPTIONS TO THE MINIMUM DRIVEWAY WIDTH FOR SHARED DRIVEWAYS.

APPROVED BY:	APPROVED BY:
DocuSigned by: Suhail Kanwar 9EFB80C541F5478...	DocuSigned by: KHANG NGUYEN 95A29EFDA75B4CD...
CITY ENGINEER	CITY TRAFFIC ENGINEER
APPROVED BY: DocuSigned by: A83C4108725B453...	
DIRECTOR OF HOUSTON PUBLIC WORKS	
EFF DATE: NOV–27–2023	DWG NO: 02754–01B

IDS Engineering Group
13430 NW. Freeway, Suite 700
Houston, Tx. 77040
713.462.3178
TxEng Firm 2726 | TxSurv Firm 10110700

SURVEYED BY: KUO & ASSOCIATES, INC.
TBPE FIRM #F–4579; TBPLS FIRM #1007560

CITY OF HOUSTON
HOUSTON PUBLIC WORKS STANDARD

LIFT STATION RENEWAL AND REPLACEMENT FY 2023

DRIVEWAY DETAIL WITH 6" CURBED STREETS

WBS NUMBER	FOR CITY OF HOUSTON USE ONLY
R–000267–0179–3	
DRAWING SCALE	
NOT TO SCALE	
CITY OF HOUSTON PM	
NAWARAJ PANTA, P.E.	
SHEET NO. 283 OF 321	

DWG. NO. C–08

DISCLAIMER:
THE USE OF THIS STANDARD IS GOVERNED BY THE TEXAS ENGINEERING PRACTICE ACT. THE DESIGN REQUIREMENTS ON THIS STANDARD DO NOT PURPORT TO ADDRESS ALL OF THE SAFETY CONCERNS ASSOCIATED WITH THEIR USE. THE ENGINEER OF RECORD (EOR) IS TO REVIEW THESE DESIGN REQUIREMENTS AND BY AUTHORIZING THEIR USE; ACCEPTS RESPONSIBILITY FOR THEIR APPLICABILITY, ADEQUACY AND SAFETY. NO WARRANTY OF ANY KIND IS MADE BY THE CITY OF HOUSTON FOR ANY PURPOSES WHATSOEVER. THE CITY OF HOUSTON ASSUMES NO RESPONSIBILITY FOR INCORRECT RESULTS OR DAMAGES RESULTING FROM ITS USE.
FILE PATH: \\idseg.com\FS\Projects\0000\005708500 CoH Lift Stations – FY 2023\CAD\DWG\PRODUCTION\283–DRIVEWAY DETAILS.dwg

PLOTTED: 12/17/2025 8:40 AM

DocuSign Envelope ID: CB71C116-B716-4899-A5EE-0D2F2CC55AF6

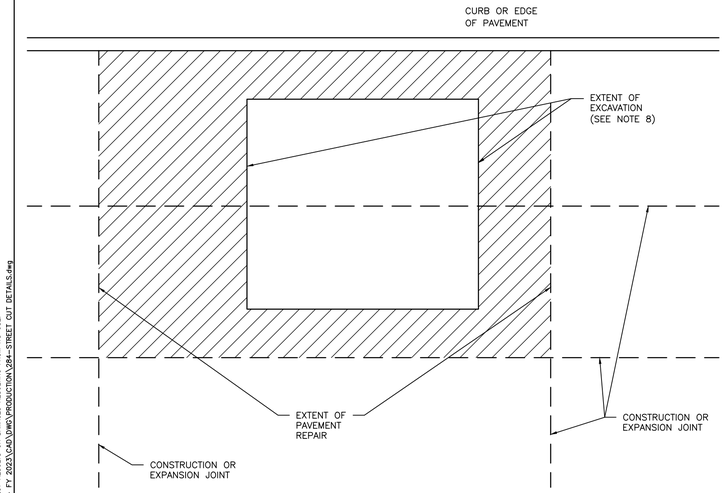

DISCLAIMER:
THE USE OF THIS STANDARD IS GOVERNED BY THE TEXAS ENGINEERING PRACTICE ACT. THE DESIGN REQUIREMENTS ON THIS STANDARD DO NOT PURPORT TO ADDRESS ALL OF THE SAFETY REQUIREMENTS ASSOCIATED WITH ITS USE. THE ENGINEER OF RECORD FOR EACH PROJECT USING THIS STANDARD IS SOLELY RESPONSIBLE FOR THE DESIGN OF THE PROJECT AND FOR ADDRESSING THE REQUIREMENTS OF GOOD ENGINEERING PRACTICE FOR THE PROTECTION OF PUBLIC AND PRIVATE PROPERTY AND FOR THE SAFETY OF THE PUBLIC IN THE USE OF THIS STANDARD. BY USING THIS STANDARD, THE ENGINEER OF RECORD ASSUMES RESPONSIBILITY FOR PROPER APPLICATION OF THE STANDARD ON THE PROJECT. THE ENGINEER OF RECORD ALSO ACCEPTS RESPONSIBILITY FOR THEIR APPLICABILITY, ADEQUACY AND SAFETY. NO WARRANTY OF ANY KIND IS MADE BY THE CITY OF HOUSTON FOR ANY PURPOSES WHATSOEVER. THE CITY OF HOUSTON ASSUMES NO RESPONSIBILITY FOR INCORRECT RESULTS OR DAMAGES RESULTING FROM ITS USE

FILE PATH: \\dseg.com\FS\Projects\0000\005708500 CoH Lift Stations - FY 2023\CAD\DWG\PRODUCTION\284-STREET CUT DETAILS.dwg

NOTES:

1. EXTENT OF PAVEMENT REPAIR SHALL BE PERPENDICULAR AND PARALLEL TO TRAVEL WAY.
2. REPLACE ENTIRE PANEL WIDTH AND LENGTH TO NEAREST CONSTRUCTION OR EXPANSION JOINT BEYOND EDGE OF EXCAVATION.
3. SAW CUT AND EXPOSE 15" OF REINFORCING STEEL WITHIN EXISTING PAVEMENT. PROVIDE HORIZONTAL DOWELS (PER SPECIFICATION SECTION 02951–PAVEMENT REPAIR AND RESTORATION) IF EXISTING REINFORCING IS BROKEN OFF.
4. REPLACE CURB WHEN ADJACENT LANE IS REPLACED.
5. MAINTAIN EXPANSION JOINTS AT EXISTING LOCATIONS UNLESS OTHERWISE DIRECTED BY CITY ENGINEER.
6. SPECIALTY PAVEMENTS (IE: BRICK PAVERS) TO BE REPLACED WITH MATCHING PAVEMENT IN ALL CASES.
7. REPLACE PAVEMENT MARKINGS IN ACCORDANCE WITH CITY OF HOUSTON STANDARD SPECIFICATIONS 02764–RAISED PAVEMENT MARKERS AND 02767–THERMOPLASTIC PAVEMENT MARKINGS.
8. EXTENT OF EXCAVATION INCLUDES 18" OVERCUT AS SHOWN ON STANDARD DETAIL 02951–04 PAVEMENT REPAIR DETAIL FOR STREET CUTS (FLEX–BASE PAVEMENT & CONCRETE PAVEMENT).

CITY OF HOUSTON
HOUSTON PUBLIC WORKS STANDARD

STREET CUT FOR CONCRETE PAVEMENT REPLACEMENT/RESTORATION AGE OF PAVEMENT ≤ 5YRS
(SCALE: NOT TO SCALE)

APPROVED BY:

DocuSigned by: Suhail Kanwar — CITY ENGINEER
DocuSigned by: HANG NGUYEN — CITY TRAFFIC ENGINEER
DocuSigned by: Carol Haddock — DIRECTOR OF HPW

EFF DATE: NOV–27–2023 | DWG NO: 02951–01

NO.	DATE	REVISION	APP.

IDS Engineering Group
13430 NW. Freeway, Suite 700
Houston, Tx. 77040
713.462.3178
TxEng Firm 2726 | TxSurv Firm 10110700

SURVEYED BY: KUO & ASSOCIATES, INC.
TBPE FIRM #F–4578; TBPLS FIRM #1007560

THIS DOCUMENT IS RELEASED FOR THE PURPOSE OF REVIEW UNDER THE AUTHORITY OF MARCEL KHOUW, P.E. 101807 ON 12/17/2025. IT IS NOT TO BE USED FOR CONSTRUCTION PURPOSES.

CITY OF HOUSTON
HOUSTON PUBLIC WORKS

LIFT STATION RENEWAL AND REPLACEMENT FY 2023

STREET CUT FOR CONCRETE PAVEMENT REPLACEMENT RESTORATION

WBS NUMBER	FOR CITY OF HOUSTON USE ONLY
R–000267–0179–4	
DRAWING SCALE	
HORIZ: N.T.S. VERT: N/A	
CITY OF HOUSTON PM	
NAWARAJ PANTA, P.E.	
SHEET NO. 284 OF 321	

DWG. NO.
C–09

FILE PATH: \\dseg.com\FS\Projects\0000\005708500 CoH Lift Stations - FY 2023\CAD\DWG\PRODUCTION\284-STREET CUT DETAILS.dwg

PLOTTED: 12/17/2025 8:40 AM

DocuSign Envelope ID: CB71C116-B716-4899-A5EE-0D2F2CC55AF6

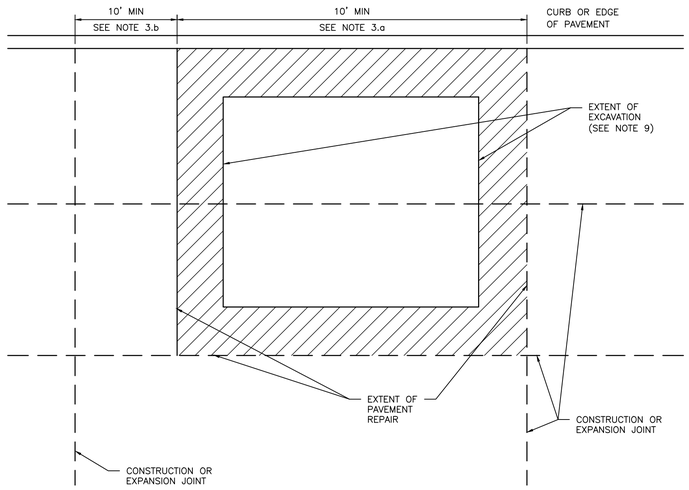

NOTES:

1. EXTENT OF PAVEMENT REPAIR SHALL BE PERPENDICULAR AND PARALLEL TO TRAVEL WAY.
2. WIDTH:
   REPLACE PANEL WIDTH TO NEAREST CONSTRUCTION OR EXPANSION JOINT BEYOND EDGE OF EXCAVATION.
3. LENGTH:
   a. MINIMUM LENGTH OF PAVEMENT REPAIR ALONG TRAVEL WAY IS 10' FROM THE NEAREST JOINT.
   b. IF EXTENT OF PAVEMENT REPAIR IS LESS THAN 10' FROM EXISTING CONSTRUCTION OR EXPANSION JOINT, EXTEND PAVEMENT REPAIR TO EXISTING JOINT.
4. SAW CUT AND EXPOSE 15" OF REINFORCING STEEL AROUND EDGE OF PANEL REPLACEMENT. PROVIDE HORIZONTAL DOWELS (PER SPECIFICATION SECTION 02951–PAVEMENT REPAIR AND RESTORATION) IF REINFORCING IS BROKEN OFF OR DOES NOT EXIST.
5. REPLACE CURB WHEN ADJACENT LANE IS REPLACED.
6. MAINTAIN EXPANSION JOINTS AT EXISTING LOCATIONS UNLESS OTHERWISE DIRECTED BY CITY ENGINEER.
7. SPECIALTY PAVEMENTS (IE: BRICK PAVERS) TO BE REPLACED WITH MATCHING PAVEMENT IN ALL CASES.
8. REPLACE PAVEMENT MARKINGS IN ACCORDANCE WITH CITY OF HOUSTON STANDARD SPECIFICATIONS 02764–RAISED PAVEMENT MARKERS AND 02767–THERMOPLASTIC PAVEMENT MARKINGS.
9. EXTENT OF EXCAVATION INCLUDES 18" OVERCUT AS SHOWN ON STANDARD DETAIL 02951–04 PAVEMENT REPAIR DETAIL FOR STREET CUTS (FLEX–BASE PAVEMENT & CONCRETE PAVEMENT).

CITY OF HOUSTON
HOUSTON PUBLIC WORKS STANDARD

STREET CUT FOR CONCRETE PAVEMENT REPLACEMENT/RESTORATION AGE OF PAVEMENT > 5YRS
(SCALE: NOT TO SCALE)

APPROVED BY:

DocuSigned by: Sukul Kanwar — CITY ENGINEER
DocuSigned by: KHANG NGUYEN — CITY TRAFFIC ENGINEER
DocuSigned by: Carol Haddock — DIRECTOR OF HPW

EFF DATE: NOV–27–2023 | DWG NO: 02951–02

DISCLAIMER:
THE USE OF THIS STANDARD IS GOVERNED BY THE TEXAS ENGINEERING PRACTICE ACT. THE DESIGN REQUIREMENTS ON THIS STANDARD DO NOT PURPORT TO ADDRESS ALL OF THE SAFETY REQUIREMENTS ASSOCIATED WITH USE OF THE STANDARD. THE ENGINEER OF RECORD FOR EACH PROJECT USING THIS STANDARD, NOT THE CITY OF HOUSTON, IS RESPONSIBLE FOR THE PROPER DESIGN OF EACH PROJECT. THE ENGINEER OF RECORD FOR THE PROJECT USING THIS STANDARD ACCEPTS RESPONSIBILITY FOR THEIR APPLICABILITY, ADEQUACY AND SAFETY. NO WARRANTY OF ANY KIND IS MADE BY THE CITY OF HOUSTON FOR ANY PURPOSES WHATSOEVER. THE CITY OF HOUSTON ASSUMES NO RESPONSIBILITY FOR INCORRECT RESULTS OR DAMAGES RESULTING FROM ITS USE

FILE PATH: \\dseg.com\FS\Projects\0000\005708500 CoH Lift Stations - FY 2023\CAD\DWG\PRODUCTION\285-STREET CUT DETAILS.dwg

NO.	DATE	REVISION	APP.

IDS Engineering Group
13430 NW. Freeway, Suite 700
Houston, Tx. 77040
713.462.3178
TxEng Firm 2726 | TxSurv Firm 10110700

SURVEYED BY: KUO & ASSOCIATES, INC.
TBPE FIRM #F–4578; TBPLS FIRM #1007560

THIS DOCUMENT IS RELEASED FOR THE PURPOSE OF REVIEW UNDER THE AUTHORITY OF MARCEL KHOUW, P.E. 101807 ON 12/17/2025. IT IS NOT TO BE USED FOR CONSTRUCTION PURPOSES.

CITY OF HOUSTON
HOUSTON PUBLIC WORKS

LIFT STATION RENEWAL AND REPLACEMENT FY 2023

STREET CUT FOR CONCRETE PAVEMENT REPLACEMENT RESTORATION

WBS NUMBER	FOR CITY OF HOUSTON USE ONLY
R–000267–0179–4	
DRAWING SCALE	
HORIZ: N.T.S. VERT: N/A	
CITY OF HOUSTON PM	
NAWARAJ PANTA, P.E.	
SHEET NO. 285 OF 321	

DWG. NO. C–10

FILE PATH: \\dseg.com\FS\Projects\0000\005708500 CoH Lift Stations - FY 2023\CAD\DWG\PRODUCTION\285-STREET CUT DETAILS.dwg

PLOTTED: 12/17/2025 8:40 AM

DocuSign Envelope ID: CB71C116-B716-4899-A5EE-0D2F2CC55AF6

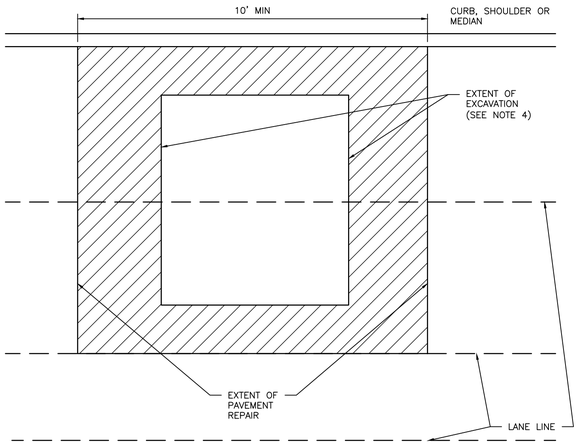

NOTES:

1. EXTENT OF PAVEMENT REPAIR SHALL BE PERPENDICULAR AND PARALLEL TO TRAVEL WAY.
2. FLEXIBLE BASE: REPLACE BASE TO SAME THICKNESS PLUS TWO INCHES (2") FOR EXTENT OF EXCAVATION. USE APPROVED BASE MATERIAL TYPE.*
3. SURFACE COURSE:
   - 3.1. WIDTH: SURFACE MILL AND OVERLAY FULL WIDTH OF LANE(S) TO NEAREST LANE DIVIDER BEYOND EDGE OF EXCAVATION.
   - 3.2. LENGTH: MINIMUM LENGTH OF SURFACE MILL ALONG TRAVEL WAY IS 10'.
   - 3.3. REPLACE PAVEMENT MARKINGS IN ACCORDANCE WITH CITY OF HOUSTON STANDARD SPECIFICATIONS 02764–RAISED PAVEMENT MARKERS AND 02767–THERMOPLASTIC PAVEMENT MARKINGS.
4. EXTENT OF EXCAVATION INCLUDES 18" OVER CUT AS SHOWN ON STANDARD DETAIL 02951–04 PAVEMENT REPAIR DETAIL FOR STREET CUTS (FLEX–BASE PAVEMENT AND CONCRETE PAVEMENT).
5. ADDITIONAL REQUIREMENTS FOR ASPHALT OVERLAY ON CONCRETE PAVEMENT:
   - 5.1. REPLACE CONCRETE FOR EXTENT OF EXCAVATION. REPLACE TO SAME THICKNESS PLUS TWO INCHES (2").
   - 5.2. WIDTH:
     - 5.2.1. IF EXCAVATION EXTENDS MORE THAN HALF OF A LANE, REPLACE ENTIRE LANE OF CONCRETE. OTHERWISE USE STANDARD DETAIL 02951–04 THROUGH 05.
   - 5.3. SAW CUT AND EXPOSE 15" OF REINFORCING STEEL AROUND EDGE OF CONCRETE REPLACEMENT. IF NO REINFORCING STEEL EXISTS, USE HORIZONTAL DOWELS PER CITY OF HOUSTON STANDARD SPECIFICATION SECTION 02951–PAVEMENT REPAIR AND RESTORATION.
   - 5.4. REPLACE CURB WHEN ADJACENT LANE IS REPLACED.
   - 5.5. MAINTAIN CONCRETE EXPANSION JOINTS AT EXISTING LOCATIONS UNLESS OTHERWISE APPROVED BY CITY ENGINEER.

CITY OF HOUSTON
HOUSTON PUBLIC WORKS STANDARD

STREET CUT FOR ASPHALT PAVEMENT REPLACEMENT/RESTORATION FOR PAVEMENT OF ALL AGES
(SCALE: NOT TO SCALE)

APPROVED BY:

DocuSigned by: Sukul Kanwar — CITY ENGINEER	DocuSigned by: Carl Haddock — DIRECTOR OF HPW
DocuSigned by: HANG NGUYEN — CITY TRAFFIC ENGINEER	
EFF DATE: NOV–27–2023	DWG NO: 02951–03

DISCLAIMER:
THE USE OF THIS STANDARD IS GOVERNED BY THE TEXAS ENGINEERING PRACTICE ACT. THE DESIGN REQUIREMENTS ON THIS STANDARD DO NOT PURPORT TO ADDRESS ALL OF THE SAFETY REQUIREMENTS ASSOCIATED WITH USE OF THE STANDARD. THE ENGINEER OF RECORD FOR EACH PROJECT IS RESPONSIBLE FOR SITE SPECIFIC DESIGNS AND FOR PROVIDING SUCH SAFETY MEASURES AS MAY BE REQUIRED FOR THE PROJECT. ANY PARTY WHO USES, OR ACCESS THIS STANDARD FOR ANY PURPOSE AGREES TO RELEASE THE CITY OF HOUSTON FROM ANY AND ALL LIABILITY FOR THE USE OF THIS STANDARD, ACCEPTS RESPONSIBILITY FOR THEIR APPLICABILITY, ADEQUACY AND SAFETY, NO WARRANTY OF ANY KIND IS MADE BY THE CITY OF HOUSTON FOR ANY PURPOSES WHATSOEVER. THE CITY OF HOUSTON ASSUMES NO RESPONSIBILITY FOR INCORRECT RESULTS OR DAMAGES RESULTING FROM ITS USE

FILE PATH: \\dseg.com\FS\Projects\0000\005708500 CoH Lift Stations - FY 2023\CAD\DWG\PRODUCTION\286-STREET CUT DETAILS.dwg

NO.	DATE	REVISION	APP.

IDS Engineering Group
13430 NW. Freeway, Suite 700
Houston, Tx. 77040
713.462.3178
TxEng Firm 2726 | TxSurv Firm 10110700

SURVEYED BY: KUO & ASSOCIATES, INC.
TBPE FIRM #F–4578; TBPLS FIRM #1007560

THIS DOCUMENT IS RELEASED FOR THE PURPOSE OF REVIEW UNDER THE AUTHORITY OF MARCEL KHOUW, P.E. 101807 ON 12/17/2025. IT IS NOT TO BE USED FOR CONSTRUCTION PURPOSES.

CITY OF HOUSTON
HOUSTON PUBLIC WORKS

LIFT STATION RENEWAL AND REPLACEMENT FY 2023

STREET CUT FOR ASPHALT PAVEMENT REPLACEMENT RESTORATION

WBS NUMBER	FOR CITY OF HOUSTON USE ONLY
R–000267–0179–4	
DRAWING SCALE	
HORIZ: N.T.S. VERT: N/A	
CITY OF HOUSTON PM	
NAWARAJ PANTA, P.E.	

DWG. NO.	SHEET NO.
C–11	286 OF 321

FILE PATH: \\dseg.com\FS\Projects\0000\005708500 CoH Lift Stations - FY 2023\CAD\DWG\PRODUCTION\286-STREET CUT DETAILS.dwg

PLOTTED: 12/17/2025 8:41 AM

DocuSign Envelope ID: CB71C116-B716-4899-A5EE-0D2F2CC55AF6

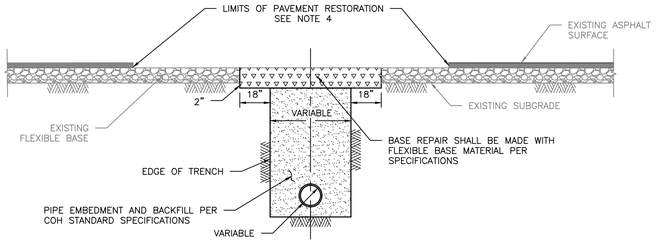

ELEVATION A
REPAIR OF FLEXIBLE BASE PAVEMENT

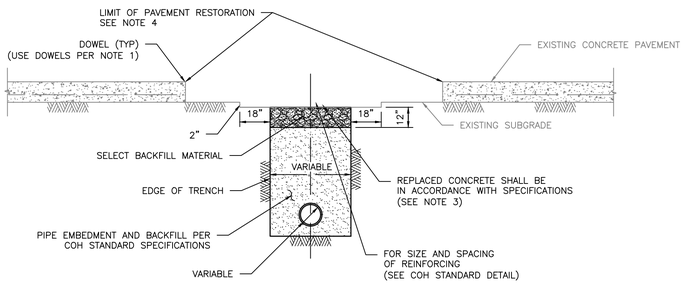

ELEVATION B
REPAIR OF REINFORCED CONCRETE PAVEMENT

NOTES:

1. EXPOSE 15" OF REINFORCING STEEL AT PROPOSED SAWED JOINT. IF NO REINFORCING STEEL EXISTS, USE HORIZONTAL DOWELS. HORIZONTAL DOWELS SHALL BE #6 BAR, 24" LONG, 24" C–C, DRILLED AND EMBEDDED 8" INTO THE CENTER OF THE EXISTING SLAB. WITH "PO ROC" OR EQUAL.
2. IF REINFORCED CONCRETE IS OVERLAYED WITH ASPHALT, REPLACE WITH 2" MIN HMAC SURFACING.
3. REFER TO STANDARD DETAIL 02751–01 FOR REINFORCING STEEL REQUIREMENTS.
4. REFER TO STANDARD DETAIL 02951–01 THROUGH 03 FOR PAVEMENT RESTORATION LIMITS.

CITY OF HOUSTON
HOUSTON PUBLIC WORKS STANDARD

PAVEMENT REPAIR DETAIL
FOR STREET CUTS
(FLEX–BASE PAVEMENT & CONCRETE PAVEMENT)
(SCALE: NOT TO SCALE)

APPROVED BY:

DocuSigned by: Suhail Kanwar — CITY ENGINEER
DocuSigned by: HANG NGUYEN — CITY TRAFFIC ENGINEER
DocuSigned by: Carol Haddock — DIRECTOR OF HPW

EFF DATE: NOV–27–2023
DWG NO: 02951–04

DISCLAIMER:
THE USE OF THIS STANDARD IS GOVERNED BY THE TEXAS ENGINEERING PRACTICE ACT. THE USER'S ACCEPTANCE OF THE TERMS OF THE LICENSE AGREEMENT IS REQUIRED PRIOR TO USE. ANY USE OF THIS STANDARD CONSTITUTES ACCEPTANCE OF THE LICENSE AGREEMENT. ALL USE IS AT THE USER'S SOLE RISK. TO THE EXTENT PERMITTED BY LAW, THE CITY OF HOUSTON DISCLAIMS ALL EXPRESS AND IMPLIED WARRANTIES, INCLUDING WITHOUT LIMITATION, IMPLIED WARRANTIES OF MERCHANTABILITY AND FITNESS FOR A PARTICULAR PURPOSE. THE USER ASSUMES ALL RISK AND LIABILITY WHATSOEVER IN CONNECTION WITH ITS USE, VALIDATION, OR APPLICATION OF THIS STANDARD FOR ANY PURPOSE, AND ACCEPTS RESPONSIBILITY FOR THEIR APPLICABILITY, ACCURACY AND SAFETY. NO WARRANTY OF ANY KIND IS MADE BY THE CITY OF HOUSTON WHATSOEVER. THE CITY OF HOUSTON ASSUMES NO RESPONSIBILITY FOR INCORRECT RESULTS OR DAMAGES RESULTING FROM ITS USE.
FILE PATH: \\idseg.com\FS\Projects\0000\005708500 CoH Lift Stations – FY 2023\CAD\DWG\PRODUCTION\287–STREET CUT DETAILS.dwg

IDS Engineering Group
13430 NW. Freeway, Suite 700
Houston, Tx. 77040
713.462.3178
TxEng Firm 2726 | TxSurv Firm 10110700

SURVEYED BY: KUO & ASSOCIATES, INC.
TBPE FIRM #F–4578; TBPLS FIRM #1007560

THIS DOCUMENT IS RELEASED FOR THE PURPOSE OF REVIEW UNDER THE AUTHORITY OF MARCEL KHOUW, P.E. 101807 ON 12/17/2025. IT IS NOT TO BE USED FOR CONSTRUCTION PURPOSES.

CITY OF HOUSTON
HOUSTON PUBLIC WORKS

LIFT STATION RENEWAL AND REPLACEMENT FY 2023

PAVEMENT REPAIR DETAIL FOR STREET CUTS

WBS NUMBER	FOR CITY OF HOUSTON USE ONLY
R–000267–0179–4	
DRAWING SCALE	
HORIZ: N.T.S. VERT: N/A	
CITY OF HOUSTON PM	
NAWARAJ PANTA, P.E.	

DWG. NO. C–12

SHEET NO. 287 OF 321

NO.	DATE	REVISION	APP.

FILE PATH: \\idseg.com\FS\Projects\0000\005708500 CoH Lift Stations – FY 2023\CAD\DWG\PRODUCTION\287–STREET CUT DETAILS.dwg

PLOTTED: 12/17/2025 8:41 AM

DocuSign Envelope ID: CB71C116-B716-4899-A5EE-0D2F2CC55AF6

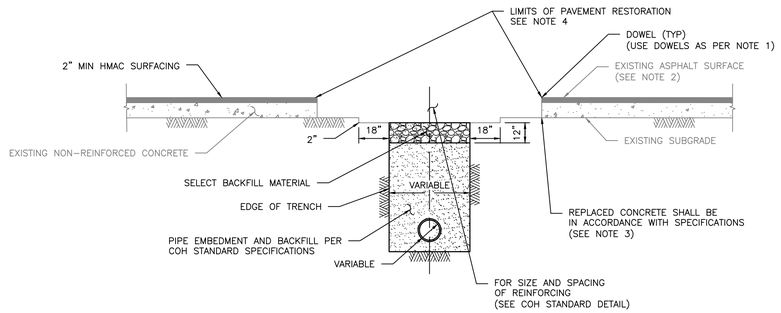

ELEVATION C
REPAIR OF NON-REINFORCED CONCRETE PAVEMENT

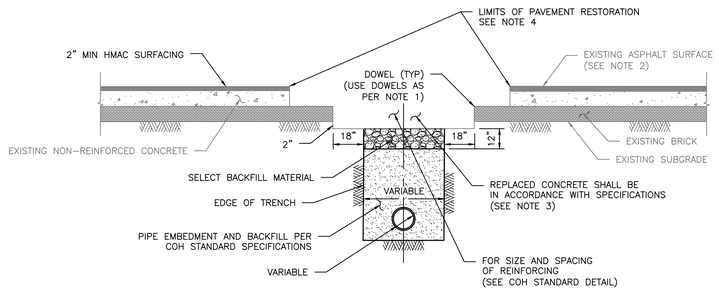

ELEVATION D
REPAIR OF NON-REINFORCED CONCRETE PAVEMENT WITH BRICK

NOTES:

1. EXPOSE 15" OF REINFORCING STEEL AT PROPOSED SAWED JOINT. IF NO REINFORCING STEEL EXISTS, USE HORIZONTAL DOWELS. HORIZONTAL DOWELS SHALL BE #6 BAR, 24" LONG, 24" C-C, DRILLED AND EMBEDDED 8" INTO THE CENTER OF THE EXISTING SLAB. WITH "PO ROC" OR EQUAL.
2. IF REINFORCED CONCRETE IS OVERLAYED REPLACE WITH SAME THICKNESS OF HMAC SURFACING.
3. REFER TO STANDARD DETAIL 02751-01 FOR REINFORCING STEEL REQUIREMENT
4. REFER TO STANDARD DETAILS 02951-01 THROUGH 03 FOR PAVEMENT RESTORATION LIMITS.

CITY OF HOUSTON
HOUSTON PUBLIC WORKS STANDARD

PAVEMENT REPAIR DETAIL
FOR STREET CUTS
(NON-REINFORCED CONCRETE & BRICK PAVEMENT)
(SCALE: NOT TO SCALE)

APPROVED BY:

DocuSigned by: Sukai Kanwar — CITY ENGINEER
DocuSigned by: KHANG NGUYEN — CITY TRAFFIC ENGINEER
DocuSigned by: Carl Haddock — DIRECTOR OF HPW

EFF DATE: NOV-27-2023
DWG NO: 02951-05

DISCLAIMER:
THE USE OF THIS STANDARD IS GOVERNED BY THE TEXAS ENGINEERING PRACTICE ACT. THE JEDSON REQUIREMENTS ON THIS STANDARD DO NOT PURPORT TO ADDRESS ALL OF THE SAFETY PROVISIONS APPROPRIATE TO ITS USE. THE ENGINEER USING THIS STANDARD IS OBLIGATED BY LAW TO EXERCISE PROFESSIONAL JUDGMENT IN ITS USE. ACCEPTS RESPONSIBILITY FOR THEIR APPLICABILITY, ADEQUACY AND SAFETY. NO WARRANTY OF ANY KIND IS MADE BY THE CITY OF HOUSTON FOR ANY PURPOSES WHATSOEVER. THE CITY OF HOUSTON ASSUMES NO RESPONSIBILITY FOR INCORRECT RESULTS OR DAMAGES RESULTING FROM ITS USE

FILE PATH: \\idseg.com\FS\Projects\0000\005708500 CoH Lift Stations - FY 2023\CAD\DWG\PRODUCTION\288-STREET CUT DETAILS.dwg

NO.	DATE	REVISION	APP.

IDS Engineering Group
13430 NW. Freeway, Suite 700
Houston, Tx. 77040
713.462.3178
TxEng Firm 2726 | TxSurv Firm 10110700

SURVEYED BY: KUO & ASSOCIATES, INC.
TBPE FIRM #F-4578; TBPLS FIRM #1007560

THIS DOCUMENT IS RELEASED FOR THE PURPOSE OF REVIEW UNDER THE AUTHORITY OF MARCEL KHOUW, P.E. 101807 ON 12/17/2025. IT IS NOT TO BE USED FOR CONSTRUCTION PURPOSES.

CITY OF HOUSTON
HOUSTON PUBLIC WORKS

LIFT STATION RENEWAL AND REPLACEMENT FY 2023

PAVEMENT REPAIR DETAIL FOR STREET CUTS

WBS NUMBER	FOR CITY OF HOUSTON USE ONLY
R-000267-0179-4	
DRAWING SCALE	
HORIZ: N.T.S. VERT: N/A	
CITY OF HOUSTON PM	
NAWARAJ PANTA, P.E.	
SHEET NO. 288 OF 321	

DWG. NO.
C-13

DocuSign Envelope ID: 9B122261-CF05-457B-9A65-2650F40B66D5

DISCLAIMER:
THE USE OF THIS STANDARD IS GOVERNED BY THE TEXAS ENGINEERING PRACTICE ACT. THE DESIGN REQUIREMENTS ON THIS STANDARD DO NOT PURPORT TO ADDRESS ALL OF THE SAFETY CONCERNS ASSOCIATED WITH THEIR USE. THE ENGINEER OF RECORD (EOR) IS TO REVIEW THESE DESIGN REQUIREMENTS AND BY AUTHORIZING THEIR USE, ACCEPTS RESPONSIBILITY FOR THEIR APPLICABILITY, ADEQUACY AND SAFETY. NO WARRANTY OF ANY KIND IS MADE BY THE CITY OF HOUSTON FOR ANY PURPOSES WHATSOEVER. THE CITY OF HOUSTON ASSUMES NO RESPONSIBILITY FOR INCORRECT RESULTS OR DAMAGES RESULTING FROM ITS USE.

FILE PATH: \\idseg.com\FS\Projects\0000\005708500 CoH Lift Stations - FY 2023\CAD\DWG\PRODUCTION\289-CURB GUTTER HEADER DTLS.dwg

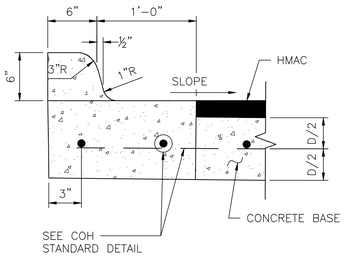

ESPLANADE CURB CONNECTED TO CONCRETE BASE

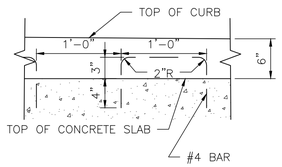

ALTERNATE CONCRETE CURB REINFORCEMENT

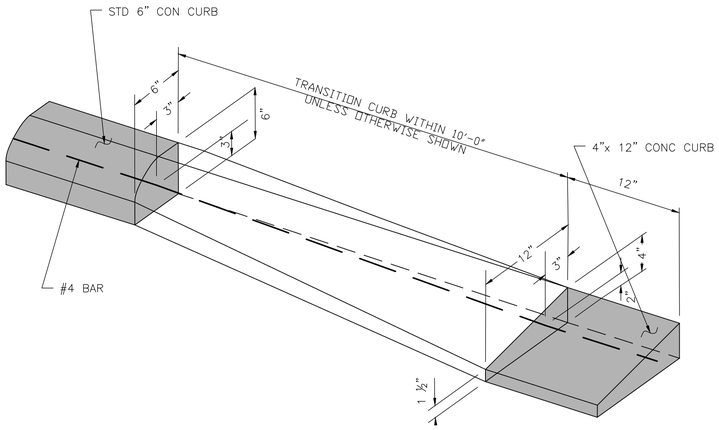

CURB TRANSITION

(SEE NOTES)

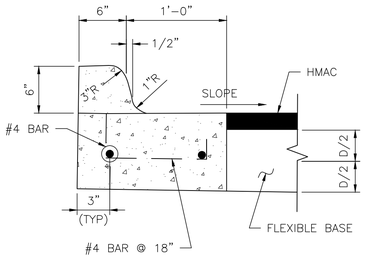

ESPLANADE CURB CONNECTED TO FLEXIBLE BASE

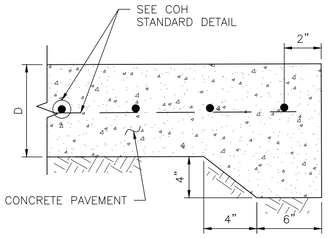

STANDARD CONCRETE PAVING HEADER

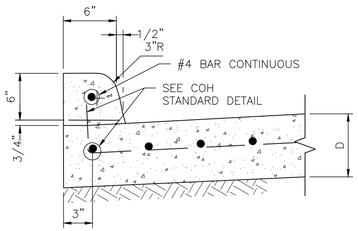

CONCRETE CURB

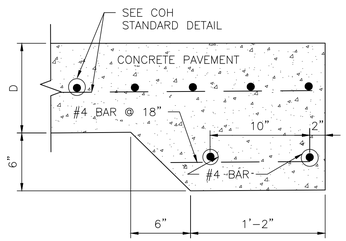

STANDARD RAILROAD HEADER

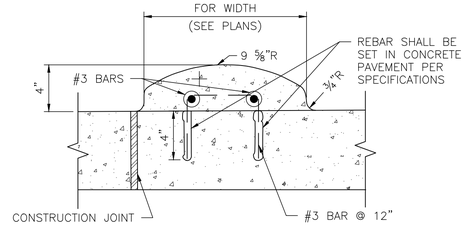

MOUNTABLE CURB

WHEN CONCRETE CURB IS TO BE PLACED EXISTING CONCRETE USE BASE
#4 BAR @ 18x10" LONG, DOWELED AND SET IN EPOXY GROUT.
SET #4 DOWEL BARS, 25" LONG AT 12" C-C WHEN PAVEMENT SECTION POURED.

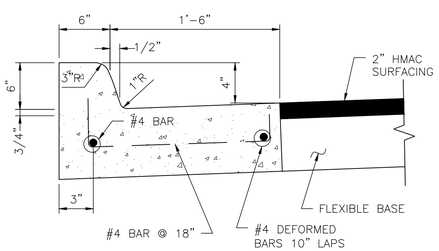

MONOLITHIC CURB AND GUTTER

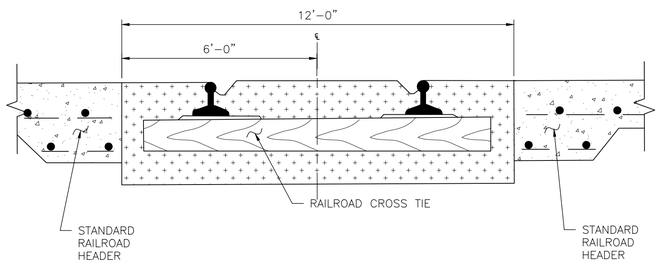

STANDARD RAILROAD CROSSING – SINGLE TRACK

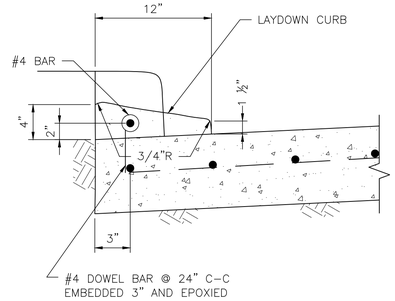

4-INCH x 12-INCH TRANSITION CURB

(SEE NOTES)

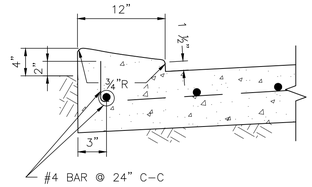

4-INCH x 12-INCH MONOLITHIC CURB

(SEE NOTES)

4"x12" MONOLITHIC AND TRANSITION CURB NOTES:

1. 6-INCH CONCRETE CURB TO BE CONSTRUCTED ON ALL ESPLANADES, ISLANDS, NON-RESIDENTIAL STREETS, AND RESIDENTIAL STREETS.
2. TRANSITIONS FROM 6- INCH CONCRETE CURB TO 4-INCH x 12-INCH CONCRETE CURB TO BE ACCOMPLISHED WITHIN 10 FEET, UNLESS OTHERWISE SHOWN. IF THIS 10-FEET TRANSITION CURB IS NOT POURED MONOLITHICALLY WITH THE PAVEMENT, THEN REINFORCING STEEL AS SHOWN IN "4-INCH x 12-INCH TRANSITION CURB" IS TO BE INSTALLED.

APPROVED BY:	APPROVED BY:
DocuSigned by: Sukat kanwar 8EF8B0C641F5478...	DocuSigned by: KHANG NGUYEN 95A28EFDA756ACD...
CITY ENGINEER	CITY TRAFFIC ENGINEER
APPROVED BY: DocuSigned by: Carl Haddock A5DC41B87353453...	
DIRECTOR OF HOUSTON PUBLIC WORKS	
EFF DATE: NOV-27-2023	DWG NO: 02771-01

IDS Engineering Group
13430 NW. Freeway, Suite 700
Houston, Tx. 77040
713.462.3178
TxEng Firm 2726 | TxSurv Firm 10110700

SURVEYED BY: KUO & ASSOCIATES, INC.
TBPE FIRM #F-4579; TBPLS FIRM #1007560

CITY OF HOUSTON

HOUSTON PUBLIC WORKS STANDARD

LIFT STATION RENEWAL AND REPLACEMENT FY 2023

CURB, CURB AND GUTTER AND HEADER DETAILS

WBS NUMBER	FOR CITY OF HOUSTON USE ONLY
R-000267-0179-3	
DRAWING SCALE	
NOT TO SCALE	
CITY OF HOUSTON PM	
NAWARAJ PANTA, P.E.	
SHEET NO. 289 OF 321	

DWG. NO. C-14

PLOTTED: 12/17/2025 8:41 AM

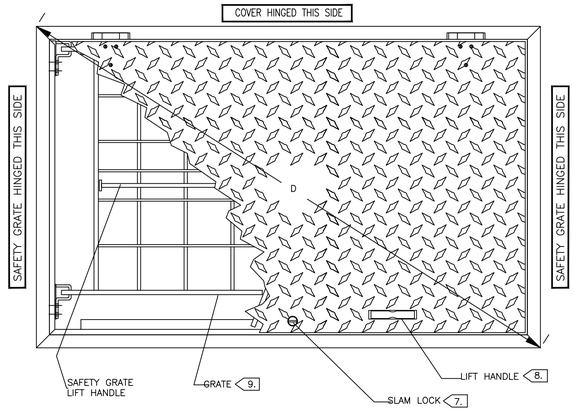

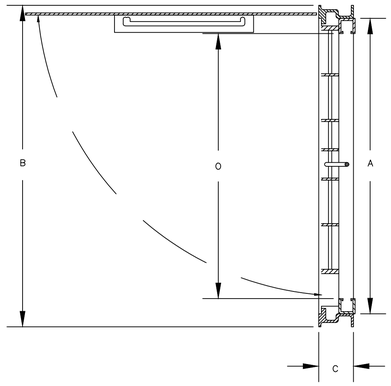

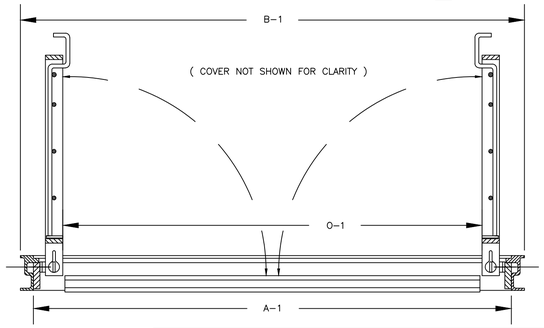

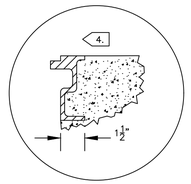

DETAIL B

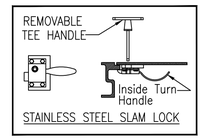

DETAIL A

PATTERN NO.	DIMENSIONS IN INCHES		UNOBSTRUCTED CLEAR OPENING	HEIGHT	DIAGONAL
ALUMINUM	A x A1	B x B1	O x O1	C	D
FLED-AOSH	PER MANUFACTURER	PER MANUFACTURER	MATCH EXISTING	PER MANUFACTURER	PER MANUFACTURER

1.) MATERIAL SHALL BE 6061-T6 ALUMINUM FOR BARS, ANGLES, AND EXTRUSIONS. 1/4" DIAMOND PLATE SHALL BE 5086 ALUMINUM. EXTERIOR OF FRAME WHICH COMES IN CONTACT WITH CONCRETE SHALL HAVE ONE COAT FOREST GREEN PAINT.

2.) UNIT DESIGNED PEDESTRIAN RATED FOR A MINIMUM LIVE LOAD OF 300 LBS./SQ.FT.

3.) DOOR SHALL BE EQUIPPED WITH A HOLD OPEN ARM. DOOR SHALL LOCK OPEN IN THE 90 DEGREE POSITION. HOLD OPEN ARM SHALL BE FASTENED TO THE FRAME WITH A 1/2" GRADE 316 STAINLESS STEEL BOLT.

4. ANGLE FRAME SHALL BE OF EXTRUDED ALUMINUM, WITH A CONTINUOUS 1-1/2" ANCHOR FLANGE.

5.) COVER HINGES SHALL BE OF HEAVY DUTY DESIGN. MATERIAL SHALL BE GRADE 316 STAINLESS STEEL. EACH HINGE SHALL HAVE A GRADE 316 STAINLESS STEEL, 3/8" DIAMETER HINGE PIN. HINGE SHALL BE FASTENED TO ANGLE AND DIAMOND PLATE WITH GRADE 316 STAINLESS STEEL BOLTS AND NY-LOCK NUTS.

6.) ALL HARDWARE SHALL BE STAINLESS STEEL.

7. EACH HATCH SHALL BE SUPPLIED WITH A GRADE 316 STAINLESS STEEL SLAM LOCK, WITH KEY WAY PROTECTED BY A THREADED PLUG. PLUG SHALL BE FLUSH WITH THE TOP OF THE 1/4" DIAMOND PLATE. SLAM LOCK SHALL BE FASTENED WITH FOUR GRADE 316 STAINLESS STEEL BOLTS AND WASHERS.

8. EACH HATCH SHALL BE EQUIPPED WITH AN ALUMINUM LIFT HANDLE. THE LIFT HANDLE SHALL BE FLUSH WITH THE TOP OF THE 1/4" DIAMOND PLATE.

9. UNITS SHALL BE SUPPLIED WITH A HINGED SAFETY GRATES (SAFETY YELLOW) TO PROVIDE PROTECTION AGAINST FALL THROUGH AND TO CONTROL ACCESS TO THE CONFINED SPACE. (SEE SAFETY GRATE SPECIFICATIONS ON SEPARATE PAGE.)

10.) HATCH COVERS SHALL BE PAINTED FOREST GREEN TO DEMARCATE AND PREVENT VANDALISM.

LIFT STATION WET WELL AND SPLITTER BOX HATCHES

SOURCE: ITT/FLYGT

NO.	DATE	REVISION	APP.

IDS Engineering Group
13430 NW. Freeway, Suite 700
Houston, Tx. 77040
713.462.3178
TxEng Firm 2726 | TxSurv Firm 10110700

SURVEYED BY: KUO & ASSOCIATES, INC.
TBPE FIRM #F-4578; TBPLS FIRM #1007560

THIS DOCUMENT IS RELEASED FOR THE PURPOSE OF REVIEW UNDER THE AUTHORITY OF MARCEL KHOUW, P.E. 101807 ON 12/17/2025. IT IS NOT TO BE USED FOR CONSTRUCTION PURPOSES.

CITY OF HOUSTON

HOUSTON PUBLIC WORKS

LIFT STATION RENEWAL AND REPLACEMENT FY 2023

TYPICAL SITE DETAILS

WBS NUMBER	FOR CITY OF HOUSTON USE ONLY
R-000267-0179-4	
DRAWING SCALE	
HORIZ: N.T.S. VERT: N/A	
CITY OF HOUSTON PM	
NAWARAJ PANTA, P.E.	

DWG. NO.	SHEET NO. 290 OF 321
C-15	

FILE PATH: \\idseg.com\FS\Projects\0000\005708500 CoH Lift Stations - FY 2023\CAD\DWG\PRODUCTION\290-TYPICAL SITE DETAILS.dwg

PLOTTED: 12/17/2025 8:41 AM

DocuSign Envelope ID: 9B122261-CF05-457B-9A65-2650F40B66D5

NO.	DATE	REVISION	APP.

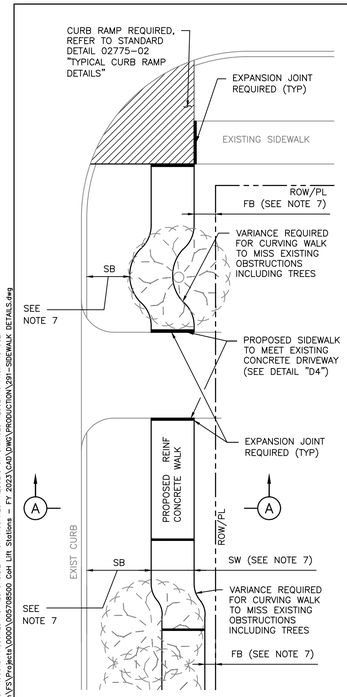

PLAN VIEW

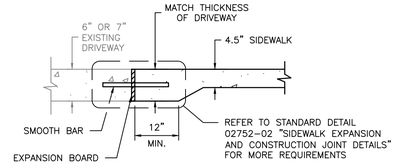

DETAIL D4
DRIVEWAY/SIDEWALK HEADER

TABLE 1

REINFORCING STEEL INFORMATION
FOR 4 ½ " THICK SIDEWALKS
EXPANSION JOINT SPACING = 40 FT
fc' = 3,500 PSI AND fy = 60,000 PSI
REFER TO CONTRACT DRAWINGS FOR SIDEWALKS WIDER THAN 6 FEET.

SIDEWALK THICKNESS (IN)	SIDEWALK WIDTH (FT)	LONGITUDINAL STEEL			TRANSVERSE STEEL #3 BARS SPACING (IN)
		#3 BARS			
		NO. OF BARS	SPACING (IN)	END BAR SPACING (IN)	
4.5	5	3	27	3	48
4.5	6	4	22	3	48

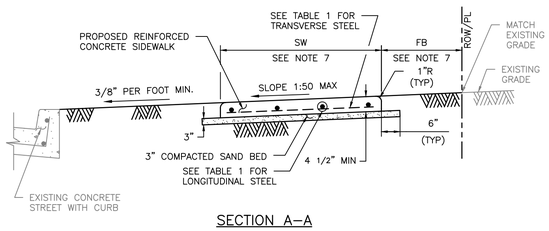

SECTION A-A

NOTES:

1. 6X6 – W2.9XW2.9 WELDED WIRE FABRIC MAY BE USED IN LIEU OF THE REINFORCING STEEL GIVEN IN TABLE 1.
2. REINFORCED CONCRETE SIDEWALKS THRU DRIVEWAYS OPENINGS SHALL BE EITHER 6" THICK OR 7" THICK AS SPECIFIED ON 6" STABILIZED SUBGRADE. FOR THE REINFORCING STEEL REQUIREMENTS, SEE CITY OF HOUSTON STANDARD DETAILS 02754-01A, 02754-01B, 02754-03, AND 02754-04.
3. MAXIMUM SPACING FOR EXPANSION JOINTS SHALL BE 40 FEET.
4. CONTRACTOR SHALL CONSTRUCT SIDEWALK IN A MANNER NOT TO BLOCK THE NATURAL DRAINAGE FROM ADJACENT PROPERTY.
5. ALL RAMPS AND SIDEWALKS/WALKWAYS SHALL BE CONSTRUCTED IN ACCORDANCE WITH HOUSTON PUBLIC WORKS STANDARDS, TEXAS ACCESSIBILITY STANDARDS (TAS) AND AMERICANS WITH DISABILITIES ACT (ADA) REQUIREMENTS. IF THERE IS A CONFLICT IN THE REQUIREMENTS, THE STRICTEST REQUIREMENTS SHALL GOVERN.
6. CURB RAMPS THAT ARE STEEPER THAN A 1:12 MAX SLOPE WILL NOT BE ACCEPTED BY THE CITY OF HOUSTON UNLESS NOTED OTHERWISE.
7. REFER TO CONTRACT DRAWINGS FOR SIDEWALK (SW), FRONTAGE BUFFER (FB), AND SAFETY BUFFER (SB) WIDTHS.

CITY OF HOUSTON
HOUSTON PUBLIC WORKS STANDARD

TYPICAL SIDEWALK LAYOUT AND DETAILS FOR STREETS WITH CURBS
(SCALE: NOT TO SCALE)

DocuSigned by: Sukut Kanwar — CITY ENGINEER	DocuSigned by: Carol Haddock — DIRECTOR OF HPW
DocuSigned by: KHANG NGUYEN — CITY TRAFFIC ENGINEER	
EFF DATE: NOV-27-2023	DWG NO: 02775-01

IDS Engineering Group
13430 NW. Freeway, Suite 700
Houston, Tx. 77040
713.462.3178
TxEng Firm 2726 | TxSurv Firm 10110700

SURVEYED BY: KUO & ASSOCIATES, INC.
TBPE FIRM #F-4578; TBPLS FIRM #1007560

THIS DOCUMENT IS RELEASED FOR THE PURPOSE OF REVIEW UNDER THE AUTHORITY OF MARCEL KHOUW, P.E. 101807 ON 12/17/2025. IT IS NOT TO BE USED FOR CONSTRUCTION PURPOSES.

CITY OF HOUSTON
HOUSTON PUBLIC WORKS

LIFT STATION RENEWAL AND REPLACEMENT FY 2023

TYPICAL SIDEWALK LAYOUT AND DETAILS FOR STREETS WITH CURBS

WBS NUMBER	FOR CITY OF HOUSTON USE ONLY
R-000267-0179-4	
DRAWING SCALE	
HORIZ: N.T.S. VERT: N/A	
CITY OF HOUSTON PM	
NAWARAJ PANTA, P.E.	
SHEET NO. 291 OF 321	

DWG. NO.
C-16

DISCLAIMER:
THE USE OF THIS STANDARD IS GOVERNED BY THE TEXAS ENGINEERING PRACTICE ACT. THE DESIGN REQUIREMENTS ON THIS STANDARD DO NOT PURPORT TO ADDRESS ALL OF THE SAFETY CONCERNS ASSOCIATED WITH THEIR USE. THE ENGINEER OF RECORD (EOR) IS TO REVIEW THESE DESIGN REQUIREMENTS AND BY AUTHORING THEIR USE, ASSUMES RESPONSIBILITY FOR THEIR APPLICATION. ADEQUACY AND SUITABILITY OF ANY KIND IS MADE BY THE CITY OF HOUSTON FOR ANY PURPOSES WHATSOEVER. THE CITY OF HOUSTON DISCLAIMS ANY WARRANTY OF ANY KIND AND ASSUMES NO LIABILITY FOR THE USE OF THIS STANDARD.

FILE PATH: \\dseg.com\FS\Projects\0000\005708500 CoH Lift Stations - FY 2023\CAD\DWG\PRODUCTION\291-SIDEWALK DETAILS.dwg

PLOTTED: 12/17/2025 8:41 AM

NOTES:

1. ALL FENCING SHALL BE MANUFACTURED AND INSTALLED PER SPECIFICATIONS.
2. PROVIDE DARK GREEN PVC COATED FENCE FABRIC, POSTS AND HARDWARE. PROVIDE DARK GREEN PVC FENCE SLATS.
3. ADJUSTABLE PIPE SUPPORT ASSEMBLY TO BE HOT DIPPED GALVANIZED AFTER FABRICATION. COLD GALVANIZING COMPOUND TO BE USED AS TOUCH UP AFTER INSTALLATION.
4. AT CONTRACTOR'S OPTION, THE ADJUSTABLE PIPE SUPPORT MAY BE AN EQUAL PURCHASED PRODUCT AS MANUFACTURED BY MATERIAL RESOURCES, GRINNEL, OR OTHER MANUFACTURER.

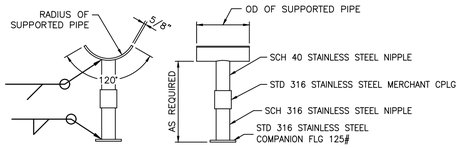

1	TYPICAL ADJUSTABLE PIPE SUPPORT	Scale: N.T.S.
		File:

NOTES:

1. ALL FENCING SHALL BE MANUFACTURED AND INSTALLED PER SPECIFICATIONS.
2. PROVIDE DARK GREEN PVC COATED FENCE FABRIC, POSTS AND HARDWARE. PROVIDE DARK GREEN PVC FENCE SLATS.
3. ADJUSTABLE PIPE SUPPORT ASSEMBLY TO BE HOT DIPPED GALVANIZED AFTER FABRICATION. COLD GALVANIZING COMPOUND TO BE USED AS TOUCH UP AFTER INSTALLATION.
4. AT CONTRACTOR'S OPTION, THE ADJUSTABLE PIPE SUPPORT MAY BE AN EQUAL PURCHASED PRODUCT AS MANUFACTURED BY MATERIAL RESOURCES, GRINNEL, OR OTHER MANUFACTURER.

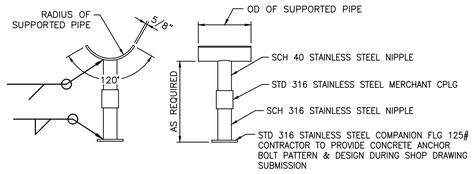

FOR USE WITH CONCRETE PIPE SUPPORT PIER

1A	TYPICAL ADJUSTABLE PIPE SUPPORT	Scale: N.T.S.
		File:

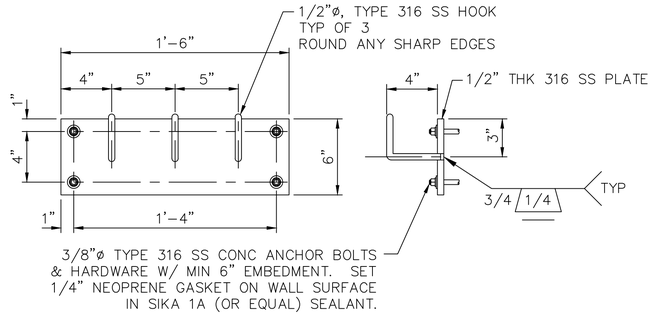

2	TYPICAL CABLE HOLDER ASSEMBLY	Scale: N.T.S.
		File:

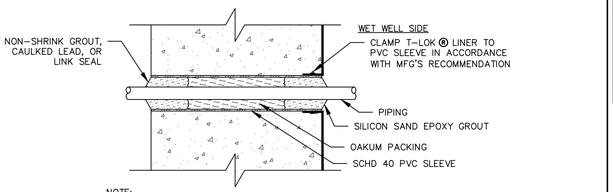

NOTE:

SLEEVED WET WELL PENETRATION IS NOT TO BE USED FOR CONDUIT INSTALLATION. SEE ELECTRICAL DETAIL SHEETS FOR CONDUIT PENETRATIONS.

6	SLEEVED WET WELL PENETRATION FOR PIPING 4" Ø & SMALLER	Scale: N.T.S.
		File:

NO.	DATE	REVISION	APP.

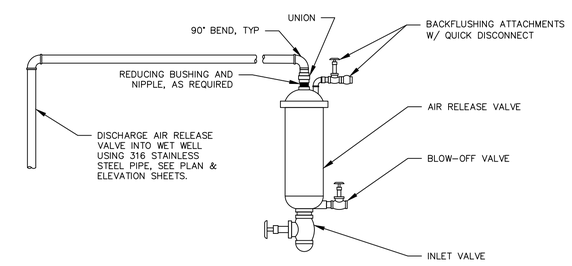

NOTES:

1. ALL PROPOSED MATERIALS SHALL BE 316 STAINLESS STEEL UNLESS NOTED OTHERWISE.
2. ISOLATE DISSIMILAR MATERIALS WITH INSULATING KITS.

3	TYPICAL AIR RELEASE VALVE ASSEMBLY	Scale: N.T.S.
		File:

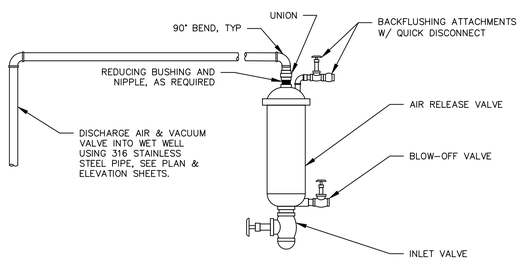

NOTES:

1. ALL PROPOSED MATERIALS SHALL BE 316 STAINLESS STEEL UNLESS NOTED OTHERWISE.
2. ISOLATE DISSIMILAR MATERIALS WITH INSULATING KITS.

4	TYPICAL AIR AND VACUUM VALVE ASSEMBLY	Scale: N.T.S.
		File:

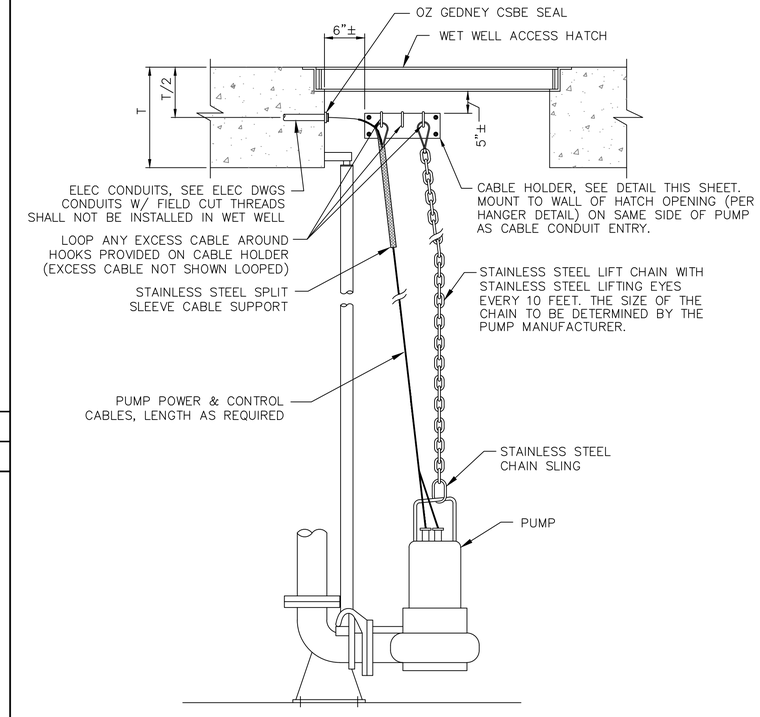

5	TYPICAL PUMP LIFTING AND CABLE DETAIL	Scale: N.T.S.
		File:

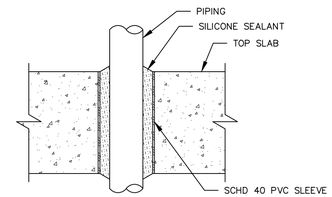

NOTE:

SLEEVED SLAB PENETRATION IS NOT TO BE USED FOR WET WELL PENETRATIONS.

7	SLEEVED SLAB PENETRATION	Scale: N.T.S.
		File:

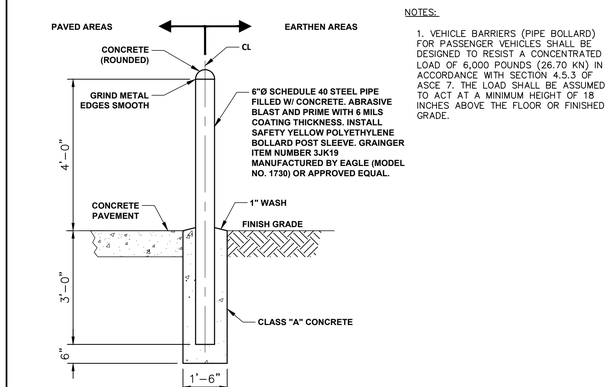

NOTES:

1. VEHICLE BARRIERS (PIPE BOLLARD) FOR PASSENGER VEHICLES SHALL BE DESIGNED TO RESIST A CONCENTRATED LOAD OF 6,000 POUNDS (26.70 KN) IN ACCORDANCE WITH SECTION 4.5.3 OF ASCE 7. THE LOAD SHALL BE ASSUMED TO ACT AT A MINIMUM HEIGHT OF 18 INCHES ABOVE THE FLOOR OR FINISHED GRADE.

8	PIPE BOLLARD DETAIL	Scale: N.T.S.

NOTES:

1. PROVIDE WARNING SIGN WHEN HOSE BIBB IS USED FOR POTABLE WATER.

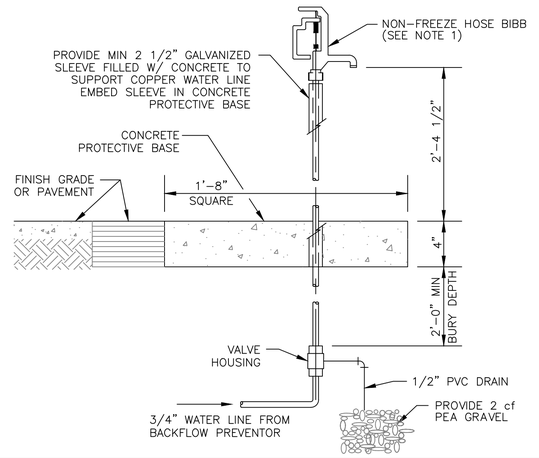

9	TYPICAL NON-FREEZE HOSE BIBB DETAIL	Scale: N.T.S.
		File:

IDS Engineering Group
13430 NW. Freeway, Suite 700
Houston, Tx. 77040
713.462.3178
TxEng Firm 2726 | TxSurv Firm 10110700

SURVEYED BY: KUO & ASSOCIATES, INC.
TBPE FIRM #F-4578; TBPLS FIRM #1007560

THIS DOCUMENT IS RELEASED FOR THE PURPOSE OF REVIEW UNDER THE AUTHORITY OF MARCEL KHOUW, P.E. 101807 ON 12/17/2025. IT IS NOT TO BE USED FOR CONSTRUCTION PURPOSES.

CITY OF HOUSTON
HOUSTON PUBLIC WORKS

LIFT STATION RENEWAL AND REPLACEMENT FY 2023

TYPICAL DETAILS – CIVIL (SHEET 1 OF 4)

WBS NUMBER	FOR CITY OF HOUSTON USE ONLY
R-000267-0179-4	
DRAWING SCALE	
HORIZ: N.T.S. VERT: N/A	
CITY OF HOUSTON PM	
NAWARAJ PANTA, P.E.	
DWG. NO. C-17	SHEET NO. 292 OF 321

FILE PATH: \\idseg.com\FS\Projects\0000\005708500 CoH Lift Stations - FY 2023\CAD\DWG\PRODUCTION\292-CIVIL DETAILS.dwg

PLOTTED: 12/17/2025 8:41 AM

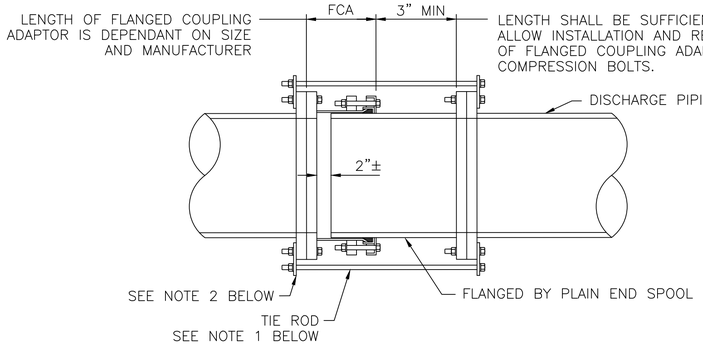

NOTES:

1. PROVIDE A NUMBER OF TIE RODS EQUAL TO 1/2 THE NUMBER OF FLANGE BOLTS. EVENLY SPACE INSTALLATION OF TIE RODS. DIAMETER OF TIE RODS TO BE EQUAL TO THE DIAMETER OF FLANGE BOLTS. LENGTH OF TIE RODS TO BE DETERMINED BY CONTRACTOR BASED ON SIZE AND MANUFACTURER OF FLANGED COUPLING ADAPTOR AND FINAL LENGTH OF SPOOL PIECE.
2. PROVIDE 316 SS TAB FOR ATTACHMENT OF TIE RODS. SIZE TO BE DETERMINED BY CONTRACTOR.
3. CONTRACTOR TO SUBMIT DETAILS DURING SHOP DRAWING SUBMISSION.
4. ALL HARDWARE SHALL BE 316 STAINLESS STEEL. TIE RODS SHOULD BE THREADED.
5. THIS RESTRAINT DOES NOT REPLACE THRUST BLOCKS TO BE PROVIDED AT OTHER LOCATIONS.

1 TYPICAL FLANGED COUPLING ADAPTOR RESTRAINT DETAIL — Scale: N.T.S. — File:

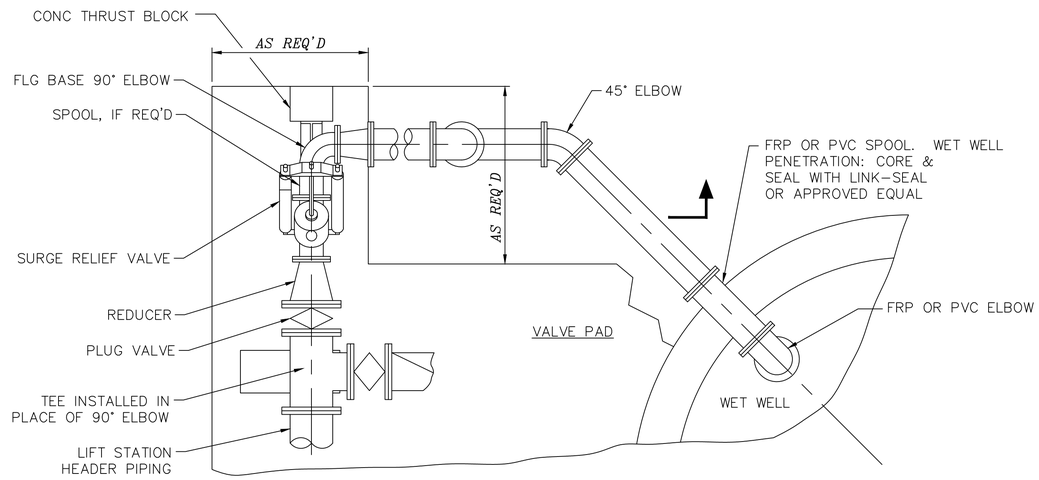

2 TYPICAL SURGE RELIEF VALVE FOR STATIONS WITHOUT VALVE VAULT — Scale: N.T.S. — File:

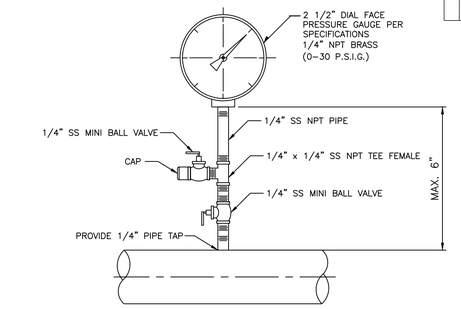

NOTE:

1. ALL FITTINGS SHALL BE STAINLESS STEEL (316).
2. ENGINEER TO SELECT PRESSURE GAUGE RANGE TO FIT APPLICATION

3 PRESSURE GAUGE DETAIL — Scale: N.T.S. — File:

NO.	DATE	REVISION	APP.

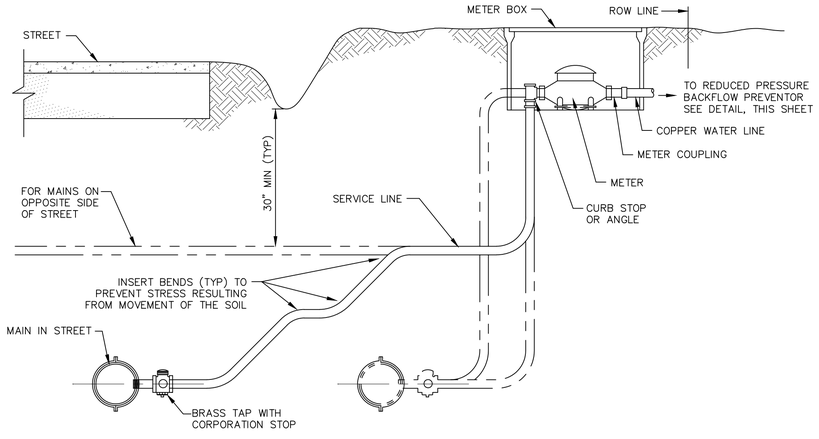

4 TYPICAL WATER SERVICE LINE SECTION & METER SET DETAIL — Scale: N.T.S. — File:

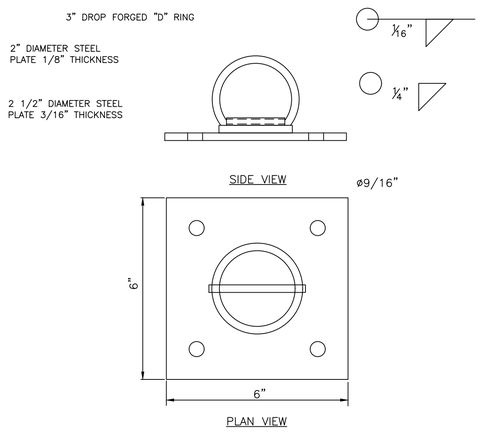

NOTES:

STEEL BASE PLATE SHALL BE ¼" HOT ROLLED STEEL PLATE THAT MEETS ASTM A-570 SPECIFICATIONS.

2 ½" DIAMETER STEEL PLATE, 3/16" THICK ATTACHED TO BASE PLATE USING ¼" FILLET WELD.

2" DIAMETER FORMED STEEL PLATE, ⅛" THICK USED TO ATTACHED "D" RING TO THE 2 ½" DIAMETER STEEL PLATE USING A 5/16" FILLET WELD.

BASE PLATE CAN BE BOLTED TO CONCRETE, STEEL, OR WOOD AS NEEDED PER APPLICATION.

ANCHOR BOLTS SHALL BE ½" DIAMETER ANCHOR BOLTS.

ANCHOR BOLTS SHALL SUSTAIN A MINIMUM ULTIMATE PULL-OUT LOAD OF AT LEAST 6,000 POUNDS.

WELDING SHALL BE PERFORMED BY A CERIFIFIED WELDER USING E-70XX ROD OR WIRE FEED.

5 CB SERIES FALL PROTECTION CB-1B BOLT ANCHORED — Scale: N.T.S. — File:

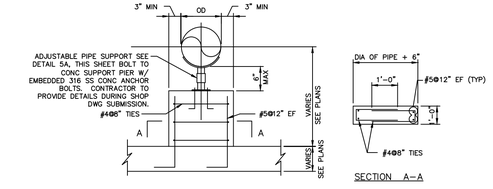

NOTES:

1. CONCRETE SUPPORT PIER IS NOT A THRUST BLOCK AND IS NOT INTENDED TO REPLACE THRUST BLOCK PROVIDED AT OTHER LOCATIONS.
2. PLACE SUPPORT PIER APPROX 9" TO 24" FROM CHECK VALVE, SEE CIVIL DRAWINGS. DO NOT PLACE SUPPORT PIER ON TOP OF EXPANSION JOINT.
3. *DESIGN ENGINEER TO PROVIDE CONCRETE PIPE SUPPORT PIER FOR ALL VALVES 14" AND LARGER. REVISE AS NECESSARY; DELETE WHEN NOT REQUIRED.*

6 TYPICAL CONCRETE PIPE SUPPORT PIER DETAIL — Scale: N.T.S. — File:

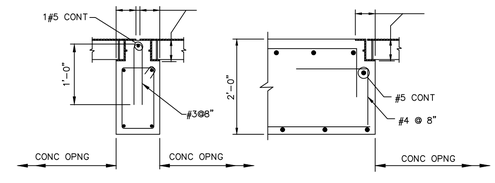

7 TYPICAL HATCH FRAME SECTIONS — Scale: N.T.S. — File:

IDS Engineering Group
13430 NW. Freeway, Suite 700
Houston, Tx. 77040
713.462.3178
TxEng Firm 2726 | TxSurv Firm 10110700

SURVEYED BY: KUO & ASSOCIATES, INC.
TBPE FIRM #F-4578; TBPLS FIRM #1007560

THIS DOCUMENT IS RELEASED FOR THE PURPOSE OF REVIEW UNDER THE AUTHORITY OF MARCEL KHOUW, P.E. 101807 ON 12/17/2025. IT IS NOT TO BE USED FOR CONSTRUCTION PURPOSES.

CITY OF HOUSTON
HOUSTON PUBLIC WORKS

LIFT STATION RENEWAL AND REPLACEMENT FY 2023

TYPICAL DETAILS – CIVIL (SHEET 2 OF 4)

WBS NUMBER	FOR CITY OF HOUSTON USE ONLY
R-000267-0179-4	
DRAWING SCALE	
HORIZ: N.T.S. VERT: N/A	
CITY OF HOUSTON PM	
NAWARAJ PANTA, P.E.	
DWG. NO. C-18	SHEET NO. 293 OF 321

FILE PATH: \\idseg.com\FS\Projects\0000\005708500 CoH Lift Stations - FY 2023\CAD\DWG\PRODUCTION\293-CIVIL DETAILS.dwg

PLOTTED: 12/17/2025 8:41 AM

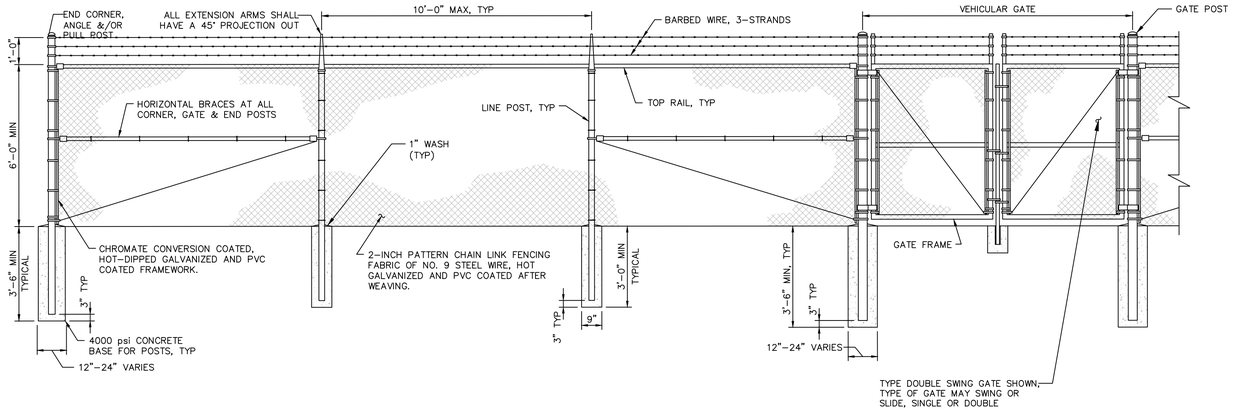

1 **GENERAL SITE FENCING** — Scale: N.T.S. — File:

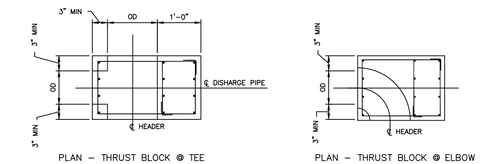

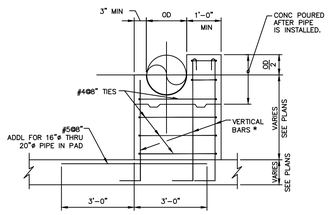

*VERTICAL BARS

PIPE DIA	NO. OF VERT BARS
4" – 8"	3 – 2#5
10" – 12"	3 – 3#5
14" – 16"	3 – 4#5
18" – 20"	3 – 4#5

DESIGN ENGINEER TO REVISE DETAIL FOR SPECIFIC PROJECT REQUIREMENTS. DELETE UNECESSARY INFORMATION.

2 **TYPICAL THRUST BLOCK DETAILS** — Scale: N.T.S. — File:

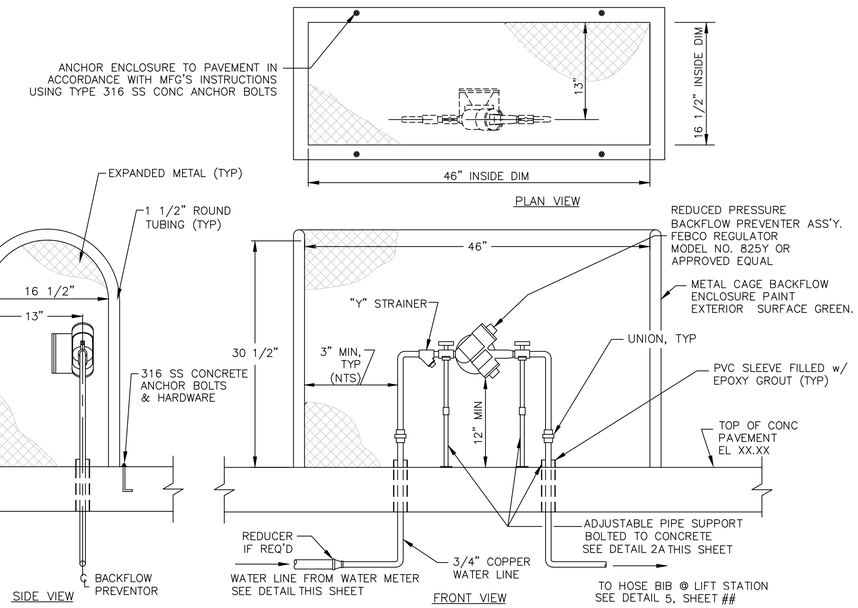

3 **OPEN CAGE REDUCED PRESSURE BACKFLOW PREVENTER INSTALLATION** — Scale: N.T.S. — File:

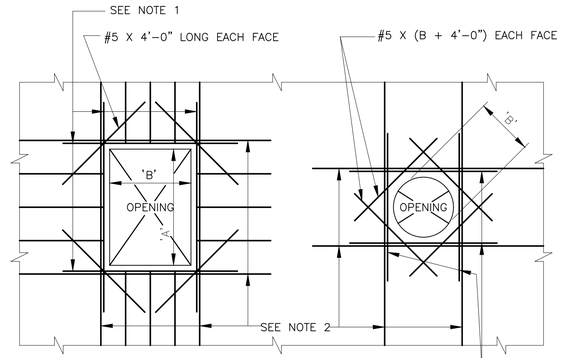

ADDL REINFORCING NOTES:

1. PROVIDE 2–#6 X (B+4'–0") ADDITIONAL REBARS @ TOP AND BOTTOM AND 2–#6 X (A+4'–0") ADDITIONAL REBARS AT EACH SIDE OF OPENING IN WALLS ONLY.
2. PROVIDE ADDL BARS EQUAL TO ONE–HALF OF BARS INTERRUPTED AT EACH SIDE OF OPENING AT 3" C/C. THESE BARS SHALL BE ORIGINAL SIZES AND LENGTHS AS THOSE OF THE INTERRUPTED BARS. (TYPICAL FOR OPENINGS IN SLABS AND PRESSURE WALLS.)

4 **ADDITIONAL REINFORCING STEEL AT OPENINGS IN WALLS & SLABS** — Scale: N.T.S. — File:

NO.	DATE	REVISION	APP.

IDS Engineering Group
13430 NW. Freeway, Suite 700
Houston, Tx. 77040
713.462.3178
TxEng Firm 2726 | TxSurv Firm 10110700

SURVEYED BY: KUO & ASSOCIATES, INC.
TBPE FIRM #F-4578; TBPLS FIRM #1007560

THIS DOCUMENT IS RELEASED FOR THE PURPOSE OF REVIEW UNDER THE AUTHORITY OF MARCEL KHOUW. P.E. 101807 ON 12/17/2025. IT IS NOT TO BE USED FOR CONSTRUCTION PURPOSES.

CITY OF HOUSTON
HOUSTON PUBLIC WORKS

LIFT STATION RENEWAL AND REPLACEMENT FY 2023

TYPICAL DETAILS – CIVIL (SHEET 3 OF 4)

WBS NUMBER	FOR CITY OF HOUSTON USE ONLY
R–000267–0179–4	
DRAWING SCALE	
HORIZ: N.T.S. VERT: N/A	
CITY OF HOUSTON PM	
NAWARAJ PANTA, P.E.	
SHEET NO. 294 OF 321	

DWG. NO. C–19

FILE PATH: \\dseg.com\FS\Projects\0000\005708500 CoH Lift Stations – FY 2023\CAD\DWG\PRODUCTION\294–CIVIL DETAILS.dwg

PLOTTED: 12/17/2025 8:41 AM

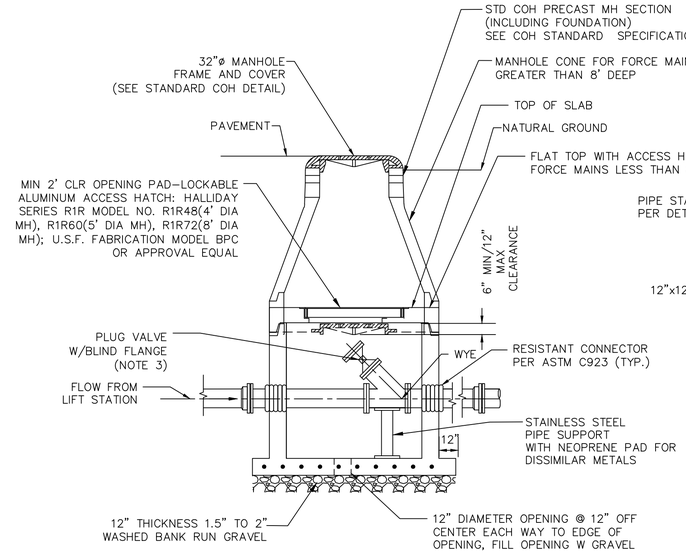

BELOW GROUND BYPASS DETAIL

	MANHOLE SIZE *(NOTE B)*
FORCEMAIN DIAMETER	MANHOLE DIAMETER
8"	4'-0"
18"	5'-0"
30"	8'-0"

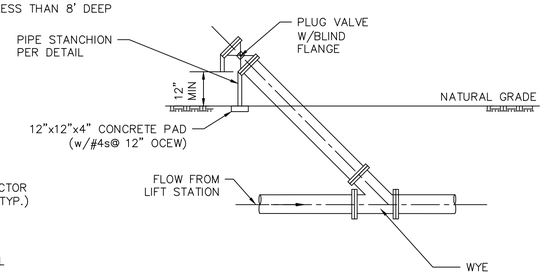

ABOVE GROUND BYPASS DETAIL

USE OF THIS DETAIL MUST BE APPROVED BY WASTEWATER OPERATIONS.

NOTES:

1. PROVIDE LINED DUCTILE IRON PIPE, THICK, CLASS 53, FOR FORCE MAIN WITHIN 12" OF OUTSIDE FACE OF MANHOLE. JOINTS WITHIN MANHOLE MAY BE FLANGED (AS SHOWN OR GROOVED (PER ASTM 606) WITHIN MANHOLE, WITH 316 STAINLESS STEEL BOLTS.
2. MANHOLE TOP MAY BE CONCENTRIC CONE, OR FLAT TOP WITH ECCENTRIC OPENING. PROVIDE 32" FRAME AND COVER.
3. ENSURE MIN CLEARANCE OF 18" ON ALL SIDES. OFFSET VALVE ON HATCH/MH OPENING AS NEEDED TO OBTAIN CLEARANCE.

BYPASS MANHOLE DETAIL
SCALE: NONE
Z0C12

1	BYPASS MANHOLE DETAIL	Scale: N.T.S.
		File:

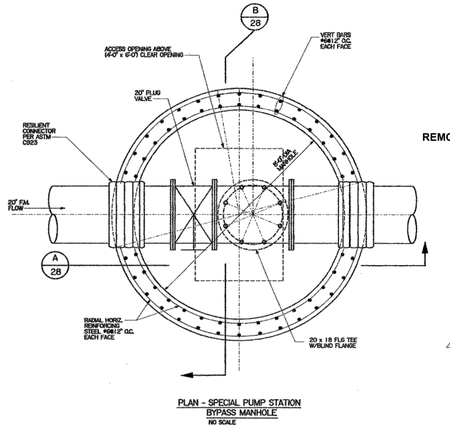

PLAN - SPECIAL PUMP STATION
BYPASS MANHOLE
NO SCALE

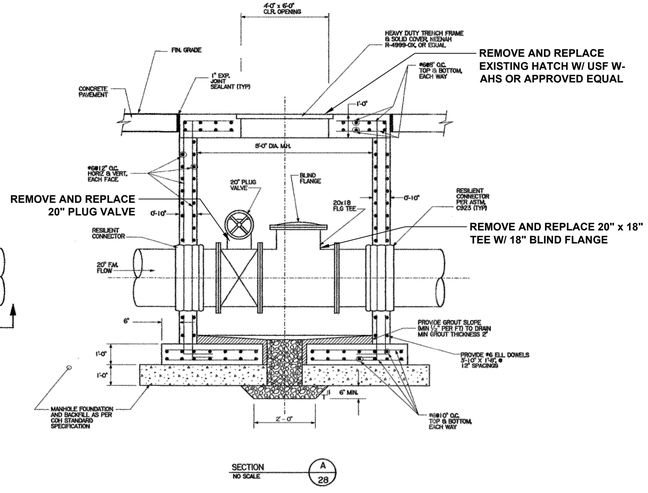

SECTION
NO SCALE
A
28

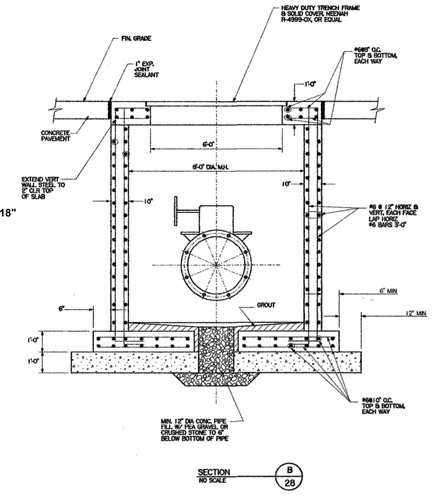

SECTION
NO SCALE
B
28

2	BYPASS MANHOLE DETAIL FOR LOCKWOOD LIFT STATION	Scale: N.T.S.
		File:

NO.	DATE	REVISION	APP.

IDS Engineering Group
13430 NW. Freeway, Suite 700
Houston, Tx. 77040
713.462.3178
TxEng Firm 2726 | TxSurv Firm 10110700

SURVEYED BY: KUO & ASSOCIATES, INC.
TBPE FIRM #F-4578; TBPLS FIRM #1007560

THIS DOCUMENT IS RELEASED FOR THE PURPOSE OF REVIEW UNDER THE AUTHORITY OF MARCEL KHOUW, P.E. 101807 ON 12/17/2025. IT IS NOT TO BE USED FOR CONSTRUCTION PURPOSES.

CITY OF HOUSTON
HOUSTON PUBLIC WORKS

LIFT STATION RENEWAL
AND REPLACEMENT FY 2023

TYPICAL DETAILS – CIVIL
(SHEET 4 OF 4)

WBS NUMBER	FOR CITY OF HOUSTON USE ONLY
R-000267-0179-4	
DRAWING SCALE	
HORIZ: N.T.S. VERT: N/A	
CITY OF HOUSTON PM	
NAWARAJ PANTA, P.E.	

DWG. NO.	SHEET NO. 295 OF 321
C-20	

FILE PATH: \\idseg.com\FS\Projects\0000\005708500 CoH Lift Stations - FY 2023\CAD\DWG\PRODUCTION\295-CIVIL DETAILS.dwg

PLOTTED: 12/17/2025 8:42 AM

FILE PATH: \\idseg.com\FS\Projects\0000\005708500 CoH Lift Stations - FY 2023\CAD\DWG\PRODUCTION\296-DISCHARGE PIPING SUPPORT DTLS.dwg

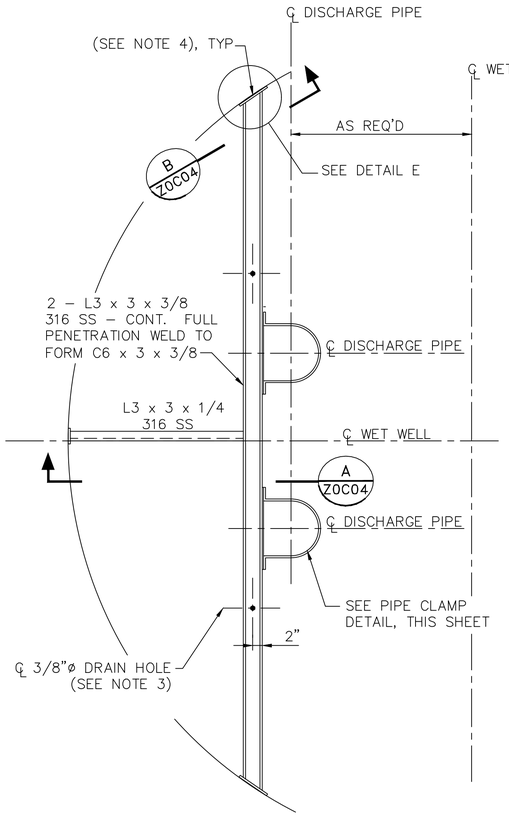

TYP DISCHARGE PIPING SUPPORT
PLAN FOR 2 PUMPS

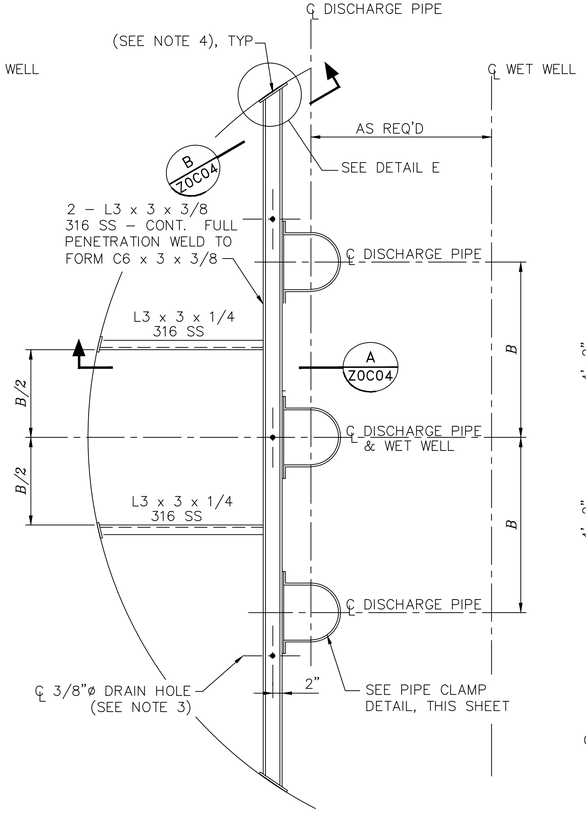

TYP DISCHARGE PIPING SUPPORT
PLAN FOR 3 PUMPS

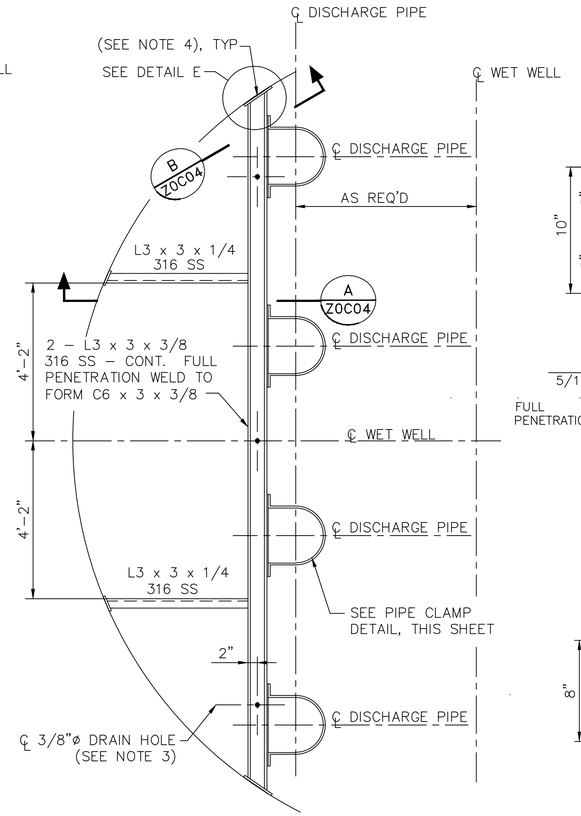

TYP DISCHARGE PIPING SUPPORT
PLAN FOR 4 PUMPS

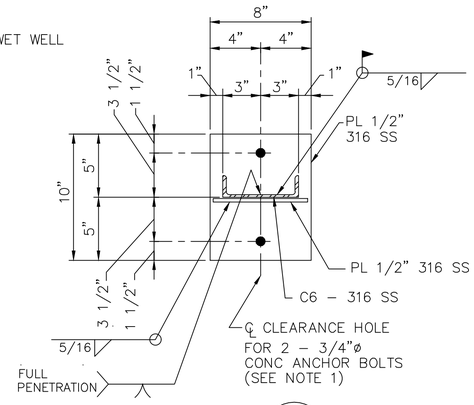

SECTION B Z0C04

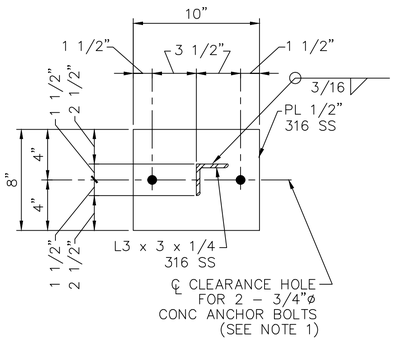

SECTION C Z0C04

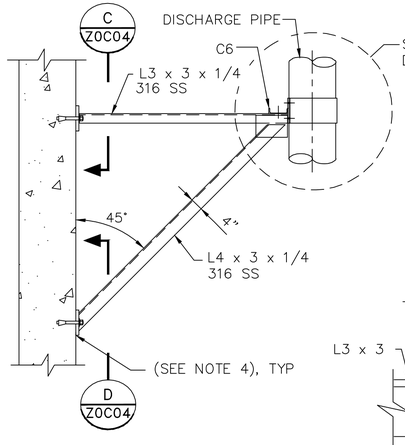

TYP LATERAL PIPE SUPPORT FRAME

SECTION A Z0C04

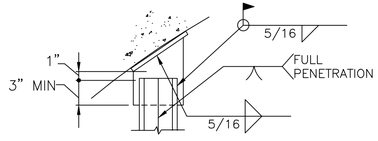

DETAIL E

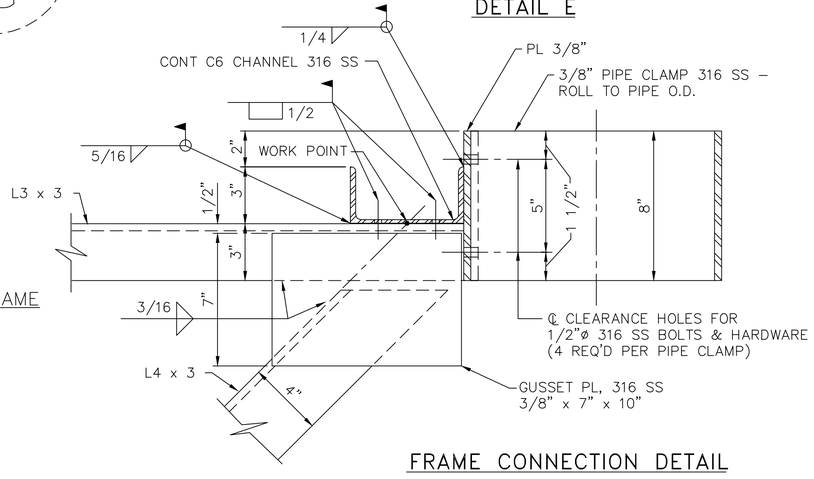

FRAME CONNECTION DETAIL

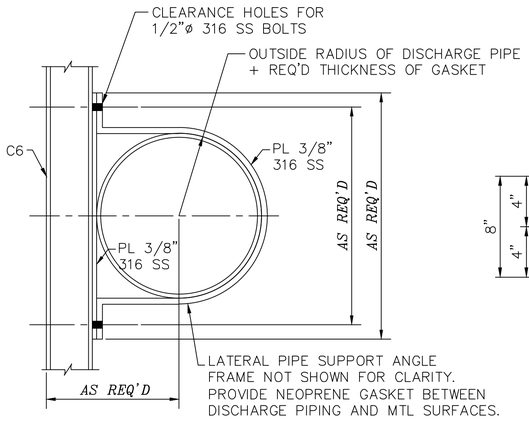

PIPE CLAMP DETAIL

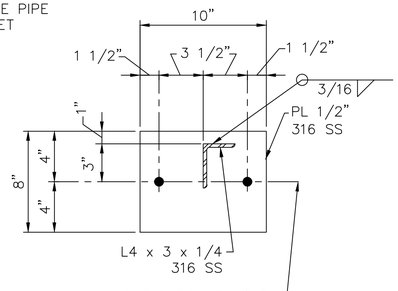

SECTION D Z0C04

NO.	DATE	REVISION	APP.

IDS Engineering Group
13430 NW. Freeway, Suite 700
Houston, Tx. 77040
713.462.3178
TxEng Firm 2726 | TxSurv Firm 10110700

SURVEYED BY: KUO & ASSOCIATES, INC.
TBPE FIRM #F-4578; TBPLS FIRM #1007560

THIS DOCUMENT IS RELEASED FOR THE PURPOSE OF REVIEW UNDER THE AUTHORITY OF MARCEL KHOUW, P.E. 101807 ON 12/17/2025. IT IS NOT TO BE USED FOR CONSTRUCTION PURPOSES.

CITY OF HOUSTON
HOUSTON PUBLIC WORKS

LIFT STATION RENEWAL AND REPLACEMENT FY 2023

DISCHARGE PIPING SUPPORT DETAILS

WBS NUMBER	FOR CITY OF HOUSTON USE ONLY
R-000267-0179-4	
DRAWING SCALE	
HORIZ: N.T.S. VERT: N/A	
CITY OF HOUSTON PM	
NAWARAJ PANTA, P.E.	

DWG. NO.	SHEET NO. 296 OF 321
C-21	

PLOTTED: 12/17/2025 8:42 AM

FILE PATH: \\dseg.com\FS\Projects\0000\005708500 CoH Lift Stations - FY 2023\CAD\DWG\PRODUCTION\297-STORM SWR DTLS.dwg

NO.	DATE	REVISION	APP.

02081-05

COH IS PHASING OUT BRICK. NEW DETAILS TO BE POSTED END OF 2019

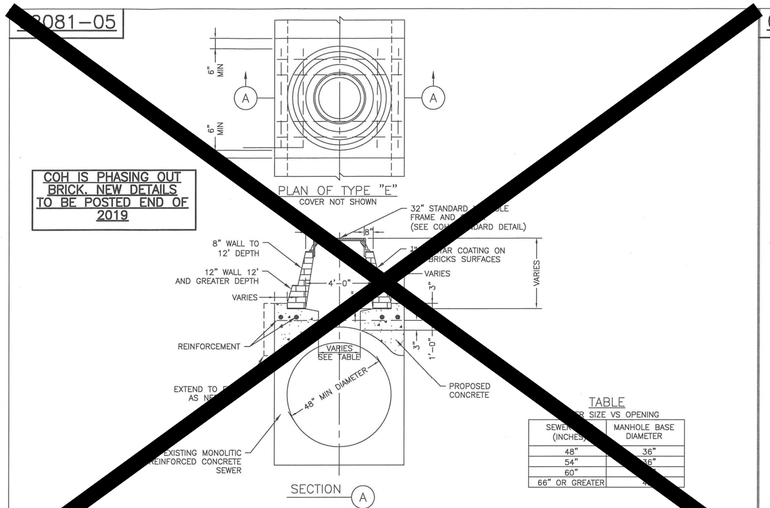

TABLE
SIZE VS OPENING

SEWER (INCHES)	MANHOLE BASE DIAMETER
48"	36"
54"	36"
60"	
66" OR GREATER	

STORM SEWER MANHOLE TYPE 'E' FOR EXISTING MONOLITIC REINFORCED CONCRETE 48" DIAMETER AND GREATER
NTS

02081-06

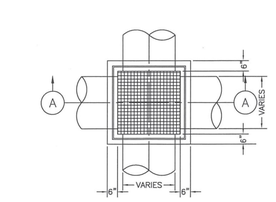

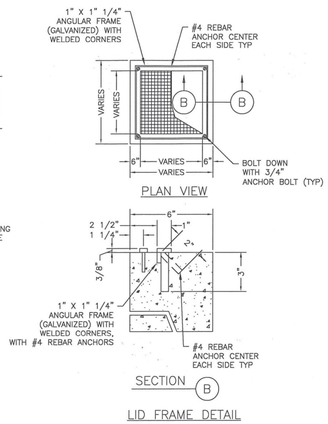

NOTES:

1. DETAIL TO BE USED WHERE STORM SEWER SIZE IS 24" DIA OR LESS. FOR SEWER GREATER 24" DIA USE TYPE 'C' MANHOLE.

NOTES TO SPECIFIER:

1. WALL TO BE 6" CONCRETE.
2. NOT TO BE USED IN STREET. FOR AREA BETWEEN CURB AND PROPERTY LINE ONLY.

STORM SEWER
JUNCTION BOX WITH LID OR GRATE TOP
FOR MAXIMUM OF 24" DIAMETER STORM SEWE4R5
NTS

02081-07

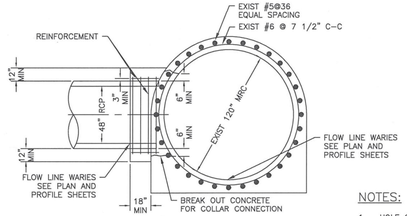

NOTES:

1. HOLE CUT IN WALL OF 120" MRC TO BE NEAT AND DONE IN WORKMAN LIKE MANNER.
2. THE STEEL COLLAR TO EXIST LONGITUDINAL AND ELLIPTICAL STEEL WHERE APPLICABLE.
3. CONCRETE COLLAR SHALL BE CONSTRUCTED AT EACH CONNECTION OF A PROPOSED RCP TO AN EXISTING MRC. HOLE CUT IN WALL OF EXISTING 96" MRC TO BE NEAT AND DONE IN WORKMAN LIKE MANNER.

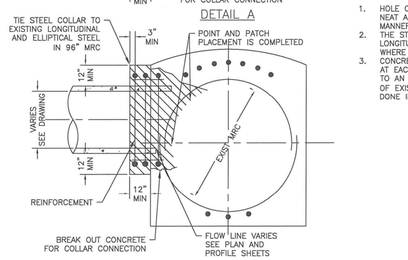

LATERAL CONNECTION TO EXISTING MONOLITHIC REINFORCED CONCRETE STORM SEWER
NTS

02081-08

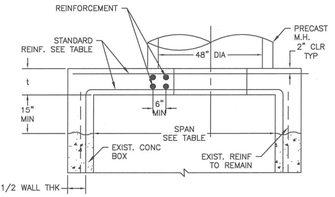

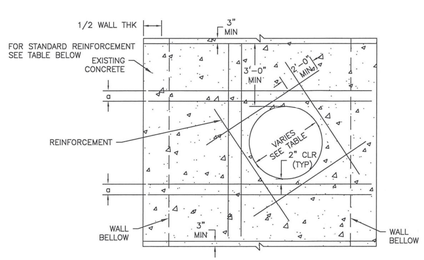

PROPOSED MANHOLE ON EXISTING BOX STORM SEWER
NTS

FIRM INFORMATION | ENGINEER'S SEAL

CITY OF HOUSTON
HOUSTON PUBLIC WORKS

STORM SEWER
02081-05 THROUGH 08

APPROVED BY: CITY ENGINEER

APPROVED BY: DEPUTY DIRECTOR

APPROVED BY: DIRECTOR

EFFECTIVE DATE: JUL-01-2019

FOR CITY OF HOUSTON USE ONLY

SHEET NO.

IDS Engineering Group
13430 NW. Freeway, Suite 700
Houston, Tx. 77040
713.462.3178
TxEng Firm 2726 | TxSurv Firm 10110700

SURVEYED BY: KUO & ASSOCIATES, INC.
TBPE FIRM #F-4578; TBPLS FIRM #1007560

THIS DOCUMENT IS RELEASED FOR THE PURPOSE OF REVIEW UNDER THE AUTHORITY OF MARCEL KHOUW, P.E. 101807 ON 12/17/2025. IT IS NOT TO BE USED FOR CONSTRUCTION PURPOSES.

CITY OF HOUSTON
HOUSTON PUBLIC WORKS

LIFT STATION RENEWAL AND REPLACEMENT FY 2023

STORM SEWER DETAILS (SHEET 1 OF 7)

WBS NUMBER	FOR CITY OF HOUSTON USE ONLY
R-000267-0179-4	
DRAWING SCALE	
HORIZ: N.T.S. VERT: N/A	
CITY OF HOUSTON PM	
NAWARAJ PANTA, P.E.	
SHEET NO. 297 OF 321	

DWG. NO.
C-22

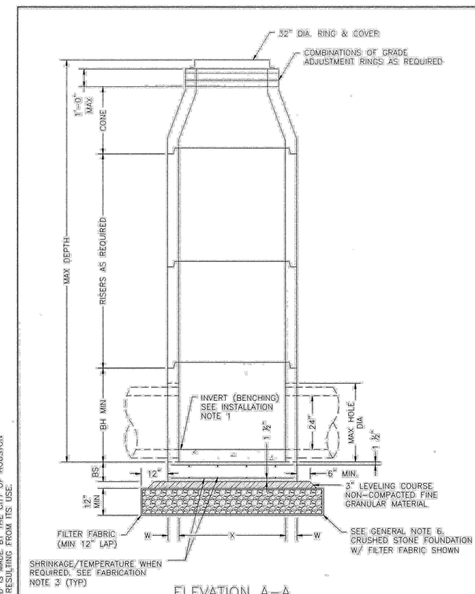

ELEVATION A–A
CONE TOP WITH SHIP LOOSE RING & COVER OPTION

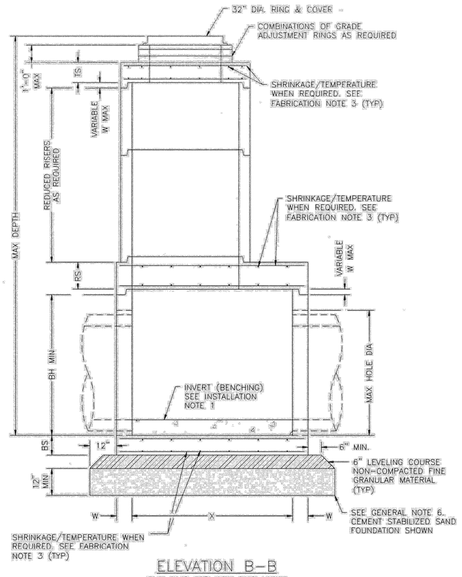

ELEVATION B–B
FLAT SLAB TOP WITH SHIP LOOSE RING & COVER OPTION

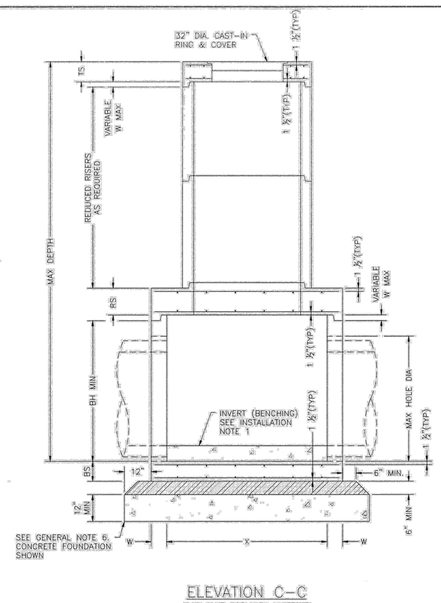

ELEVATION C–C
FLAT SLAB TOP WITH INVERTED RING & COVER OPTION

FABRICATION NOTES:

1. PROVIDE CLASS "H" CONCRETE IN ACCORDANCE WITH TEXAS DEPARTMENT OF TRANSPORTATION ITEM 421 AND HAVING A MINIMUM COMPRESSIVE STRENGTH OF 5,000 PSI.
2. PROVIDE GRADE 60 REINFORCING STEEL OR EQUIVALENT AREA OF WWR. PROVIDE CIRCUMFERENTIAL REINFORCING STEEL IN VERTICAL WALLS OF BASE, RISER AND CONE IN ACCORDANCE WITH ASTM C478.
3. SLABS WITH A THICKNESS OF 8" OR GREATER REQUIRE SHRINKAGE AND TEMPERATURE REINFORCING STEEL. PROVIDE STEEL AREA = 0.11 IN^2/FT EACH WAY.
4. MANUFACTURE BASE AND RISERS TO NEAREST 3" INCREMENT.
5. DESIGN TONGUE AND GROOVE JOINTS FOR FULL CLOSURE ON BOTH SHOULDERS. MINIMUM SPIGOT DEPTH IS ¾".
6. PROVIDE LIFTING DEVICES IN CONFORMANCE WITH MANUFACTURER'S RECOMMENDATIONS.
7. PROVIDE CAST IRON SOLID COVER, UNLESS NOTED OTHERWISE ELSEWHERE IN THE PLANS.
8. THREE DIFFERENT OPTIONS FOR CAPPING THE MANHOLE RISER NEAR THE FINISHED GRADE ARE SHOWN. CONES CAN BE USED WHEN COVER IS SUFFICIENT TO ALLOW FOR PROPER PLACEMENT. FLAT LIDS ARE TO BE USED WHERE COVER IS LIMITED.

INSTALLATION NOTES:

1. IF REQUIRED ELSEWHERE, INVERTS (BENCHING) TO BE PROVIDED BY CONTRACTOR. CONCRETE OR MORTAR USED FOR INVERT IS SUBSIDIARY TO THIS ITEM. REFER TO CITY OF HOUSTON SPECIFICATION SECTION 02082 FOR INVERT (BENCHING) REQUIREMENTS.
2. SEAL TONGUE AND GROOVE JOINTS WITH PREFORMED OR BULK MASTIC IN CONFORMANCE WITH MANUFACTURER'S RECOMMENDATIONS. TONGUE AND GROOVE JOINTS MAY BE GROUTED NO MORE THAN ½" BETWEEN EACH SECTION, OR ½ THE JOINT DEPTH, WHICHEVER IS GREATER.
3. DO NOT GROUT RUBBER GASKET JOINTS WITHOUT MANUFACTURER'S RECOMMENDATION.
4. INITIAL INSTALLATION OF GRADE ADJUSTMENT RINGS IS LIMITED TO 1'–0" MAX AS SHOWN.
5. GRADE ADJUSTMENT RINGS MAY BE INCREASED TO 1'–6" MAX WHEN FUTURE CONSTRUCTION AFFECTS FINAL GRADE OF STRUCTURE. MAKE ADJUSTMENTS GREATER THAN 1'–6" WITH ADDITIONAL RISERS. ADJUSTMENTS MAY BE MADE UP TO THE MAX DEPTH OF 25'–0" STRUCTURE. MUST BE EVALUATED IF MAX DEPTH WILL BE EXCEEDED.

GENERAL NOTES:

1. SEE TABLE 1 FOR MINIMUM DESIGN REQUIREMENTS. CONCENTRIC RISER WITH RESPECT TO BASE (ALTERNATIVE CONFIGURATION) FALLS OUTSIDE THE SCOPE OF REQUIREMENTS PROVIDED. ENGINEER OF RECORD ACCEPTS RESPONSIBILITY FOR SAFETY AND ADEQUACY OF MANHOLE IF THE ALTERNATIVE CONFIGURATION IS USED.
2. DESIGNED ACCORDING TO ASTM C478.
3. PAYMENT FOR PRECAST MANHOLE PER SECTION 02082 "PRECAST CONCRETE MANHOLES".
4. PIPE OD + PLACEMENT TOLERANCE MUST BE EQUAL OR LESS THAN MAX HOLE DIA. FOR RIGID PIPE, PLACEMENT TOLERANCE IS 4" MAX, 2" MIN. FOR FLEXIBLE PIPE, CONSULT BOOT/SEAL MANUFACTURER'S SPECIFICATION FOR PLACEMENT TOLERANCE.
5. STORM WATER SEWER PIPE INTERNAL DIA SHALL NOT BE LESS THAN 24".
6. FOUNDATION/SUBGRADE TO BE DESIGNED BY ENGINEER AND MEET MINIMUM REQUIREMENTS ACCORDING TO SECTION 02082.
7. ALL STORM WATER MANHOLES ARE TO BE PRECAST CONCRETE, UNLESS OTHERWISE NOTED ELSEWHERE IN THE PLANS.
8. ECCENTRIC REDUCED RISER WITH RESPECT TO BASE IS THE PREFERRED MANHOLE CONFIGURATION. CONCENTRIC REDUCED RISER WITH RESPECT TO BASE MANHOLE CONFIGURATION IS AN ALTERNATIVE DESIGN THAT WILL BE ACCEPTED BASED ON THE NEEDS OF THE CITY OF HOUSTON.
9. CONES MAY BE CONCENTRIC OR ECCENTRIC. REDUCTION CONES ARE ACCEPTABLE. REFER TO MANUFACTURER FOR CONE DIMENSIONS.
10. MANHOLE SIZE SHALL CONSIDER ENGINEERING ECONOMY. THIS DETAIL IS NOT APPLICABLE TO ROUND MANHOLES LARGER THAN 6–FOOT DIA.

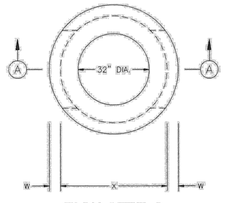

PLAN VIEW A
COVER NOT SHOWN

4–FT DIA MANHOLE

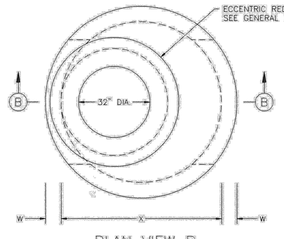

PLAN VIEW B
COVER NOT SHOWN

5–FT & 6–FT DIA MANHOLE
ECCENTRIC MANHOLE
(PREFERRED CONFIGURATION)

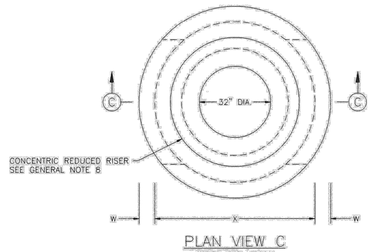

PLAN VIEW C
COVER NOT SHOWN

5–FT & 6–FT DIA MANHOLE
CONCENTRIC MANHOLE
(ALTERNATE CONFIGURATION)

TABLE 1

PRECAST ROUND MANHOLE (PRM) MINIMUM REQUIREMENTS FOR 24 IN. TO 42 IN. INTERNAL DIA STORM SEWER PIPES

	SIZE	BASE SLAB THICKNESS	BASE UNIT OR RISER THICKNESS	REDUCED RISER DIA	REDUCING SLAB THICKNESS	TOP SLAB THICKNESS	MAX DEPTH TO TOP OF BASE SLAB	MIN HEIGHT	MAX HOLE DIA
	X	BS	W	ID	RS	TS	MAX DEPTH	BH MIN	MAX HOLE DIA
	FT	IN.	IN.	IN.	IN.	IN.	FT.	IN.	IN.
PRM	4	9	5	–	–	9	25	42	35
	5	9	6	48	9	9	25	42	42
	6	9	7	48/60*	12	9	25	42	56

(*) 60–IN REDUCED RISER IS TO BE USED WHEN DEEMED NECESSARY TO SATISFY WALL PENETRATION SPACING REQUIREMENTS.

DISCLAIMER:
THE USE OF THIS STANDARD IS GOVERNED BY THE TEXAS ENGINEERING PRACTICE ACT. THE DESIGN REQUIREMENTS ON THIS STANDARD DO NOT PURPORT TO ADDRESS ALL OF THE SAFETY CONCERNS ASSOCIATED WITH THEIR USE. THE ENGINEER OF RECORD (EOR) IS TO REVIEW THESE DESIGN REQUIREMENTS AND BY AUTHORIZING THEIR USE, ACCEPTS RESPONSIBILITY FOR THEIR APPLICABILITY, ADEQUACY AND SAFETY. NO WARRANTY OF ANY KIND IS MADE BY THE CITY OF HOUSTON FOR ANY PURPOSES WHATSOEVER. THE CITY OF HOUSTON ASSUMES NO RESPONSIBILITY FOR INCORRECT RESULTS OR DAMAGES RESULTING FROM ITS USE.

NO.	DATE	REVISION	APP.

IDS Engineering Group
13430 NW. Freeway, Suite 700
Houston, Tx. 77040
713.462.3178
TxEng Firm 2726 | TxSurv Firm 10110700

SURVEYED BY: KUO & ASSOCIATES, INC.
TBPE FIRM #F–4578; TBPLS FIRM #1007560

THIS DOCUMENT IS RELEASED FOR THE PURPOSE OF REVIEW UNDER THE AUTHORITY OF MARCEL KHOUW, P.E. 101807 ON 12/17/2025. IT IS NOT TO BE USED FOR CONSTRUCTION PURPOSES.

CITY OF HOUSTON
HOUSTON PUBLIC WORKS

STORM SEWER TYPE 'C' PRECAST ROUND MANHOLE

(NOT TO SCALE)

APPROVED BY:	APPROVED BY:
CITY ENGINEER	DIRECTOR OF HOUSTON PUBLIC WORKS
EFF DATE: JUL–01–2021	DWG NO: 02082–12

CITY OF HOUSTON
HOUSTON PUBLIC WORKS

LIFT STATION RENEWAL AND REPLACEMENT FY 2023

STORM SEWER DETAILS (SHEET 2 OF 7)

WBS NUMBER	FOR CITY OF HOUSTON USE ONLY
R–000267–0179–4	
DRAWING SCALE	
HORIZ: N.T.S. VERT: N/A	
CITY OF HOUSTON PM	
NAWARAJ PANTA, P.E.	
SHEET NO. 298 OF 321	

DWG. NO.
C–23

PLOTTED: 12/17/2025 8:42 AM
FILE PATH: \\tdseg.com\FS\Projects\0000\005708500 CoH Lift Stations – FY 2023\CAD\DWG\PRODUCTION\298–STORM SWR DTLS.dwg

PLOTTED: 12/17/2025 8:42 AM

NO.	DATE	REVISION	APP.

02084-02

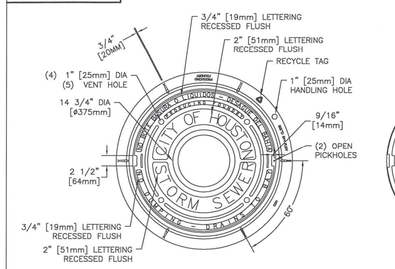

BOTTOM VIEW OF COVER

NOTES:

1. APPROXIMATE WEIGHTS.
   FRAME – 170 LBS (77KGS)
   COVER – 270 LBS (123KGS)
   UNIT – 440 LBS (200KGS)
2. MATERIALS – GRAY IRON ASTM A48 CL35B
3. CASTING TO MEET M306 PROOF LOAD SPECIFICATION
4. EJIW V-1420 ASY OR APPROVED EQUAL

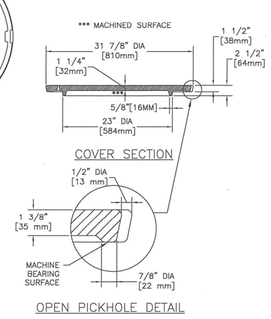

COVER SECTION

OPEN PICKHOLE DETAIL

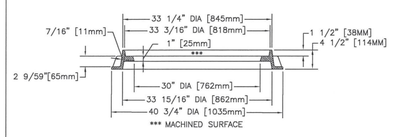

FRAME SECTION

STORM SEWER MANHOLE FRAME AND COVER
NTS

02084-03

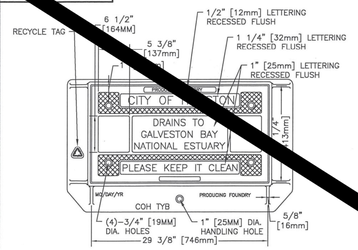

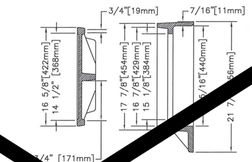

COVER SECTION FRAME SECTION

NOTES:

1. APPROXIMATE WEIGHTS.
   FRAME – 125 LBS (57KGS)
   COVER – 130 LBS (59KGS)
   UNIT – 225 LBS (116KGS)
2. MATERIALS – GRAY IRON ASTM A48 CL35B
3. CASTING TO MEET M306 PROOF LOAD SPECIFICATION
4. EJIW V-4241 ASY OR APPROVED EQUAL

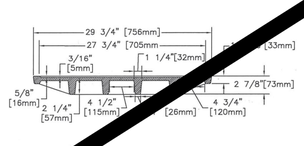

COVER SECTION

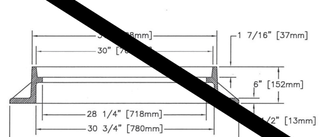

FRAME SECTION

STORM SEWER TYPE "B" INLET ASSEMBLY
NTS

02084-04

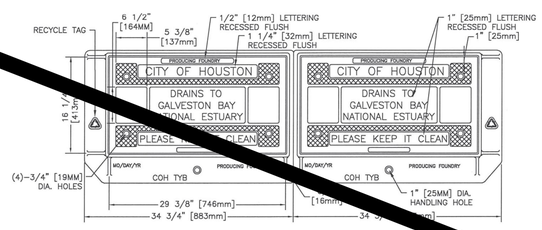

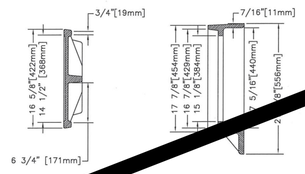

COVER SE

FRAME SECTION

NOTES:

1. APPROXIMATE WEIGHTS.
   FRAME – 125 LBS (57KGS)
   COVER – 120 LBS (55KGS)
   I BEAM – 107 LBS (49KGS)
   UNIT – 597 LBS (271KGS)
2. MATERIALS – GRAY IRON ASTM A48 CL35B
3. CASTING TO MEET M306 PROOF LOAD SPECIFICATION
4. EJIW V-4243 ASY OR APPROVED EQUAL

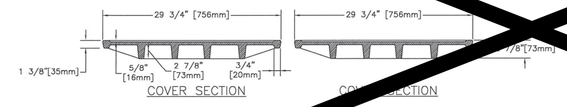

COVER SECTION

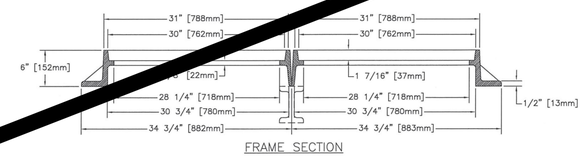

FRAME SECTION

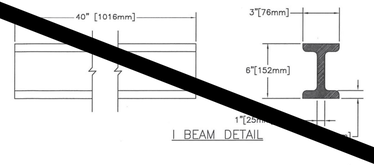

I BEAM DETAIL

STORM SEWER TYPE "BB" INLET DOUBLE ASSEMBLY
NTS

FIRM INFORMATION	ENGINEER'S SEAL
CITY OF HOUSTON HOUSTON PUBLIC WORKS	
STORM SEWER 02084-02 THROUGH 04	
APPROVED BY: CITY ENGINEER	APPROVED BY: DEPUTY DIRECTOR
APPROVED BY: DIRECTOR	
EFFECTIVE DATE: JUL-01-2019 FOR CITY OF HOUSTON USE ONLY	
SHEET NO.	

IDS Engineering Group
13430 NW. Freeway, Suite 700
Houston, Tx. 77040
713.462.3178
TxEng Firm 2726 | TxSurv Firm 10110700

THIS DOCUMENT IS RELEASED FOR THE PURPOSE OF REVIEW UNDER THE AUTHORITY OF MARCEL KHOUW, P.E. 101807 ON 12/17/2025. IT IS NOT TO BE USED FOR CONSTRUCTION PURPOSES.

SURVEYED BY: KUO & ASSOCIATES, INC.
TBPE FIRM #F-4578; TBPLS FIRM #1007560

CITY OF HOUSTON
HOUSTON PUBLIC WORKS

LIFT STATION RENEWAL AND REPLACEMENT FY 2023

STORM SEWER DETAILS (SHEET 3 OF 7)

WBS NUMBER	FOR CITY OF HOUSTON USE ONLY
R-000267-0179-4	
DRAWING SCALE	
HORIZ: N.T.S. VERT: N/A	
CITY OF HOUSTON PM	
NAWARAJ PANTA, P.E.	

DWG. NO.	SHEET NO. 299 OF 321
C-24	

FILE PATH: \\idseg.com\FS\Projects\0000\005708500 CoH Lift Stations - FY 2023\CAD\DWG\PRODUCTION\299-STORM SWR DTLS.dwg

PLOTTED: 12/17/2025 8:42 AM

NO.	DATE	REVISION	APP.

02084-05

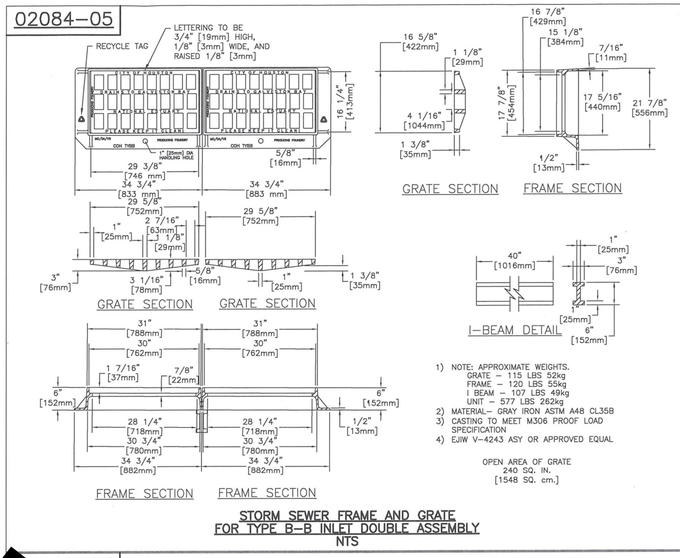

1) NOTE: APPROXIMATE WEIGHTS.
GRATE – 115 LBS 52kg
FRAME – 120 LBS 55kg
I BEAM – 107 LBS 49kg
UNIT – 577 LBS 262kg
2) MATERIAL– GRAY IRON ASTM A48 CL35B
3) CASTING TO MEET M306 PROOF LOAD SPECIFICATION
4) EJIW V-4243 ASY OR APPROVED EQUAL

OPEN AREA OF GRATE
240 SQ. IN.
[1548 SQ. cm.]

STORM SEWER FRAME AND GRATE FOR TYPE B-B INLET DOUBLE ASSEMBLY
NTS

02084-06

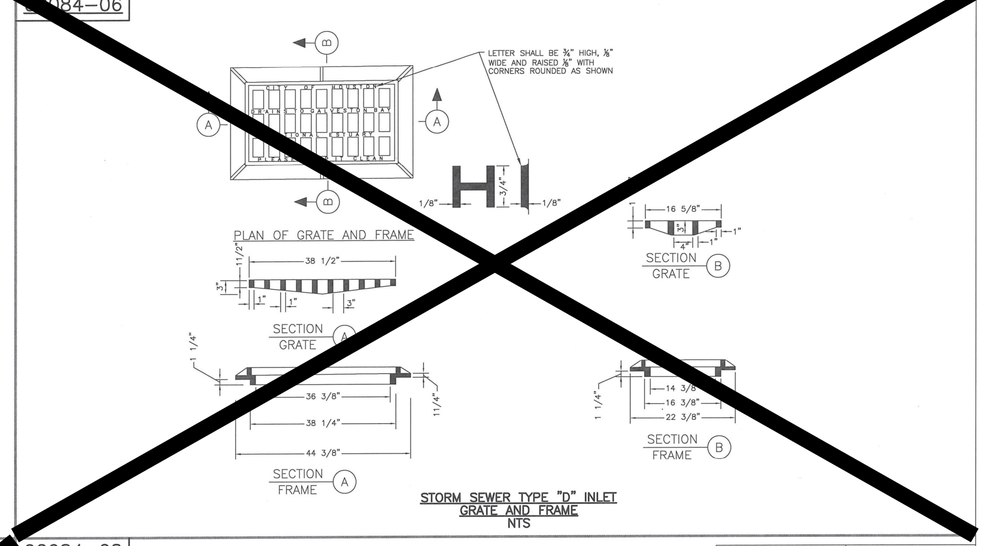

STORM SEWER TYPE "D" INLET GRATE AND FRAME
NTS

02084-07

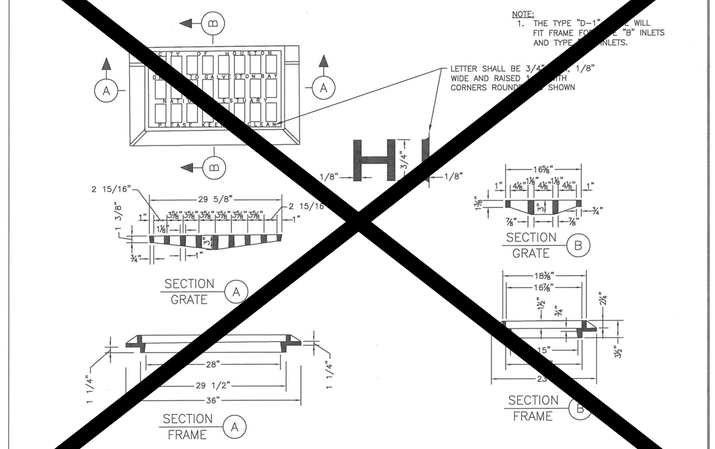

STORM SEWER TYPE "D-1" INLET GRATE AND FRAME
NTS

02084-08

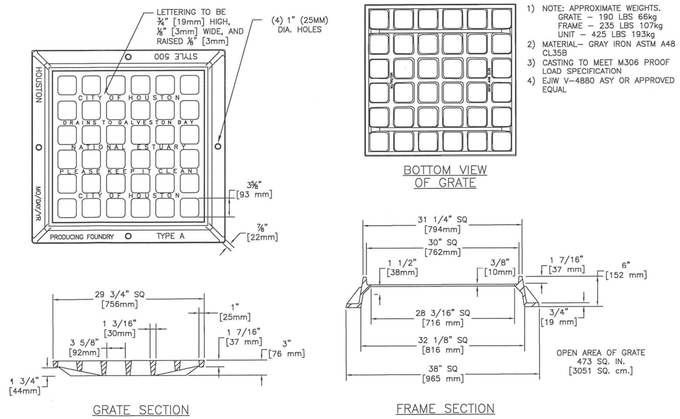

1) NOTE: APPROXIMATE WEIGHTS.
GRATE – 190 LBS 66kg
FRAME – 235 LBS 107kg
UNIT – 425 LBS 193kg
2) MATERIAL– GRAY IRON ASTM A48 CL35B
3) CASTING TO MEET M306 PROOF LOAD SPECIFICATION
4) EJIW V-4880 ASY OR APPROVED EQUAL

STORM SEWER TYPE "A" INLET GRATE AND FRAME
NTS

FIRM INFORMATION | ENGINEER'S SEAL

CITY OF HOUSTON
HOUSTON PUBLIC WORKS

STORM SEWER
02084-05 THROUGH 08

APPROVED BY: _____ CITY ENGINEER
APPROVED BY: _____ DEPUTY DIRECTOR
APPROVED BY: _____ DIRECTOR
EFFECTIVE DATE: JUL-01-2019
FOR CITY OF HOUSTON USE ONLY

SHEET NO.

IDS Engineering Group
13430 NW. Freeway, Suite 700
Houston, Tx. 77040
713.462.3178
TxEng Firm 2726 | TxSurv Firm 10110700

SURVEYED BY: KUO & ASSOCIATES, INC.
TBPE FIRM #F-4578; TBPLS FIRM #1007560

THIS DOCUMENT IS RELEASED FOR THE PURPOSE OF REVIEW UNDER THE AUTHORITY OF MARCEL KHOUW, P.E. 101807 ON 12/17/2025. IT IS NOT TO BE USED FOR CONSTRUCTION PURPOSES.

CITY OF HOUSTON
HOUSTON PUBLIC WORKS

LIFT STATION RENEWAL AND REPLACEMENT FY 2023

STORM SEWER DETAILS (SHEET 4 OF 7)

WBS NUMBER	FOR CITY OF HOUSTON USE ONLY
R-000267-0179-4	
DRAWING SCALE	
HORIZ: N.T.S. VERT: N/A	
CITY OF HOUSTON PM	
NAWARAJ PANTA, P.E.	
SHEET NO. 300 OF 321	

DWG. NO.
C-25

FILE PATH: \\dseg.com\FS\Projects\0000\005708500 CoH Lift Stations - FY 2023\CAD\DWG\PRODUCTION\300-STORM SWR DTLS.dwg

PLOTTED: 12/17/2025 8:42 AM

NO.	DATE	REVISION	APP.

02632-01

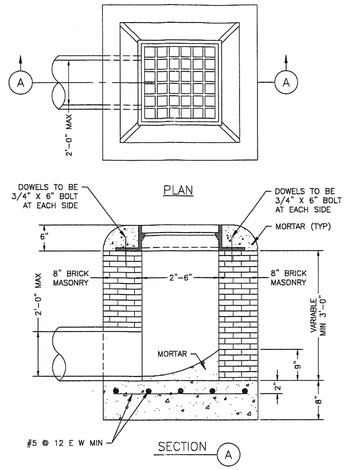

COH IS PHASING OUT BRICK. NEW DETAILS TO BE POSTED END OF 2019

STORM SEWER TYPE "A" GRATE INLET
NTS

02632-03

STEP 1: EXIST TYPE "B" INLET

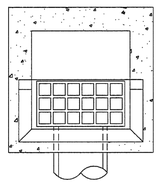

TOP VIEW

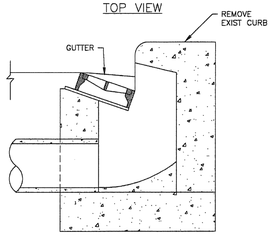

SIDE VIEW

STEP 2:

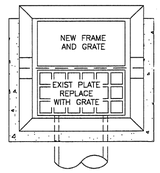

TOP VIEW

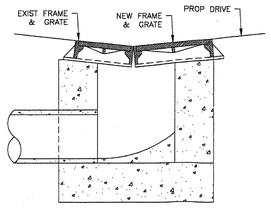

SIDE VIEW

NOTES:

1. AFTER REMOVING EXIST CURB, RAISE EXIST FRAME TO GUTTER GRADE.
2. REPLACE EXIST PLATE WITH A GRATE.
3. ADD NEW FRAME AND GRATE NEXT TO EXIST FRAME.
4. BACKFILL INLET TO A POINT ONE FOOT BEHIND THE CURB WITH 1 SACK/TON CEMENT STABILIZED SAND.

STEP 3: CONSTRUCT NEW TYPE "B-B" INLET ON CURB RETURN OF PROPOSED DRIVEWAY

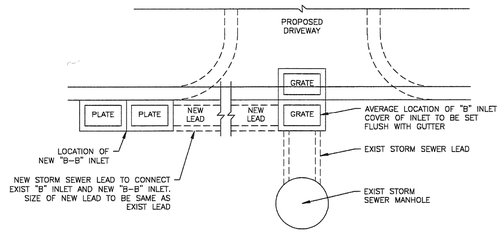

STORM SEWER TYPE "B" INLET RELOCATION
NTS

FIRM INFORMATION | ENGINEER'S SEAL

CITY OF HOUSTON
HOUSTON PUBLIC WORKS

STORM SEWER
02632-01 AND 03

APPROVED BY: _____ CITY ENGINEER
APPROVED BY: _____ DEPUTY DIRECTOR
APPROVED BY: _____ DIRECTOR OF PUBLIC WORKS AND ENGINEERING

EFFECTIVE DATE: JUL-01-2019
FOR CITY OF HOUSTON USE ONLY

SHEET NO. XX OF XX

IDS Engineering Group
13430 NW. Freeway, Suite 700
Houston, Tx. 77040
713.462.3178
TxEng Firm 2726 | TxSurv Firm 10110700

SURVEYED BY: KUO & ASSOCIATES, INC.
TBPE FIRM #F-4578; TBPLS FIRM #1007560

THIS DOCUMENT IS RELEASED FOR THE PURPOSE OF REVIEW UNDER THE AUTHORITY OF MARCEL KHOUW, P.E. 101807 ON 12/17/2025. IT IS NOT TO BE USED FOR CONSTRUCTION PURPOSES.

CITY OF HOUSTON
HOUSTON PUBLIC WORKS

LIFT STATION RENEWAL AND REPLACEMENT FY 2023

STORM SEWER DETAILS (SHEET 5 OF 7)

WBS NUMBER	FOR CITY OF HOUSTON USE ONLY
R-000267-0179-4	
DRAWING SCALE	
HORIZ: N.T.S. VERT: N/A	
CITY OF HOUSTON PM	
NAWARAJ PANTA, P.E.	
SHEET NO. 301 OF 321	

DWG. NO. C-26

FILE PATH: \\dseg.com\FS\Projects\0000\005708500 CoH Lift Stations - FY 2023\CAD\DWG\PRODUCTION\301-STORM SWR DTLS.dwg

PLOTTED: 12/17/2025 8:43 AM

NO.	DATE	REVISION	APP.

02632-04

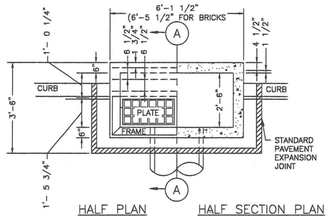

HALF PLAN HALF SECTION PLAN

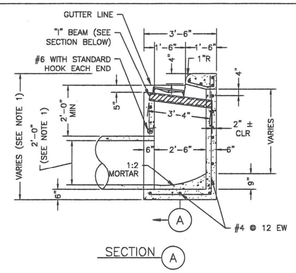

SECTION (A)

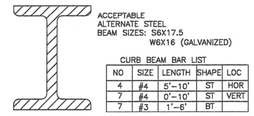

ACCEPTABLE ALTERNATE STEEL BEAM SIZES: S6X17.5 W8X16 (GALVANIZED)

CURB BEAM BAR LIST

NO	SIZE	LENGTH	SHAPE	LOC
4	#4	5'-10"	ST	HOR
7	#4	0'-10"	ST	VERT
7	#3	1'-6"	BT	

SECTION THRU BEAM

NOTES:

1. DIMENSION VARIES BASED ON PIPE DIAMETER AND WALL THICKNESS.
2. CENTER REINFORCING IN SLAB AND WALLS. CENTER STEEL BEAM ON INLET AND CAST INTO WALLS AS SHOWN.
3. WHEN TOP OF CURB TO FLOWLINE IS GREATER THAN 8 FEET USE TYPE "C" INLET.

GENERAL NOTES:

USE STANDARD CAST IRON FRAME & PLATES. LEAD SHALL LEAVE INLET AT LOCATION AND GRADE REQUIRED.

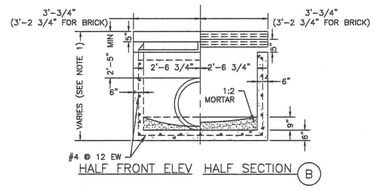

HALF FRONT ELEV HALF SECTION (B)

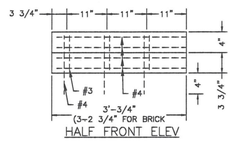

HALF FRONT ELEV

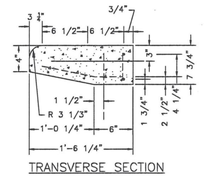

TRANSVERSE SECTION

PRECAST CURB BEAM

STORM SEWER TYPE "B-B" INLET
NTS

02632-05

STEP 1: EXIST TYPE "B" INLET

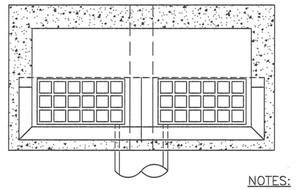

TOP VIEW

STEP 2:

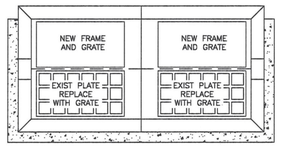

TOP VIEW

NOTES:

1. AFTER REMOVING EXIST CURB, RAISE EXIST FRAME TO GUTTER GRADE.
2. REPLACE EXIST PLATE WITH A GRATE.
3. ADD NEW FRAME AND GRATE NEXT TO EXIST FRAME.
4. BACKFILL INLET TO A POINT ONE FOOT BEHIND THE CURB WITH 1 SACK/TON CEMENT STABILIZED SAND.

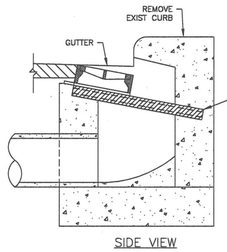

SIDE VIEW

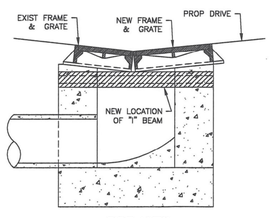

SIDE VIEW

STORM SEWER TYPE "B" INLET RELOCATION
NTS

STEP 3: CONSTRUCT NEW TYPE "B-B" INLET ON CURB RETURN OF PROPOSED DRIVEWAY

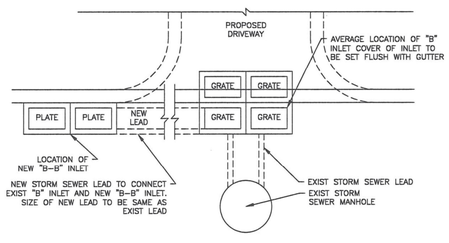

FIRM INFORMATION | ENGINEER'S SEAL

CITY OF HOUSTON
HOUSTON PUBLIC WORKS

STORM SEWER
02632-04 THROUGH 05

APPROVED BY:	APPROVED BY:
CITY ENGINEER	DEPUTY DIRECTOR
APPROVED BY:	
DIRECTOR	

EFFECTIVE DATE: JUL-01-2019

FOR CITY OF HOUSTON USE ONLY

SHEET NO.

IDS Engineering Group
13430 NW. Freeway, Suite 700
Houston, Tx. 77040
713.462.3178
TxEng Firm 2726 | TxSurv Firm 10110700

SURVEYED BY: KUO & ASSOCIATES, INC.
TBPE FIRM #F-4578; TBPLS FIRM #1007560

THIS DOCUMENT IS RELEASED FOR THE PURPOSE OF REVIEW UNDER THE AUTHORITY OF MARCEL KHOUW, P.E. 101807 ON 12/17/2025. IT IS NOT TO BE USED FOR CONSTRUCTION PURPOSES.

CITY OF HOUSTON
HOUSTON PUBLIC WORKS

LIFT STATION RENEWAL AND REPLACEMENT FY 2023

STORM SEWER DETAILS (SHEET 6 OF 7)

WBS NUMBER	FOR CITY OF HOUSTON USE ONLY
R-000267-0179-4	
DRAWING SCALE	
HORIZ: N.T.S. VERT: N/A	
CITY OF HOUSTON PM	
NAWARAJ PANTA, P.E.	
SHEET NO. 302 OF 321	

DWG. NO. C-27

FILE PATH: \\dseg.com\FS\Projects\0000\005708500 CoH Lift Stations - FY 2023\CAD\DWG\PRODUCTION\302-STORM SWR DTLS.dwg

PLOTTED: 12/17/2025 8:43 AM

FILE PATH: \\idseg.com\FS\Projects\0000\005708500 CoH Lift Stations - FY 2023\CAD\DWG\PRODUCTION\303-STORM SWR DTLS.dwg

NO.	DATE	REVISION	APP.

02632-09

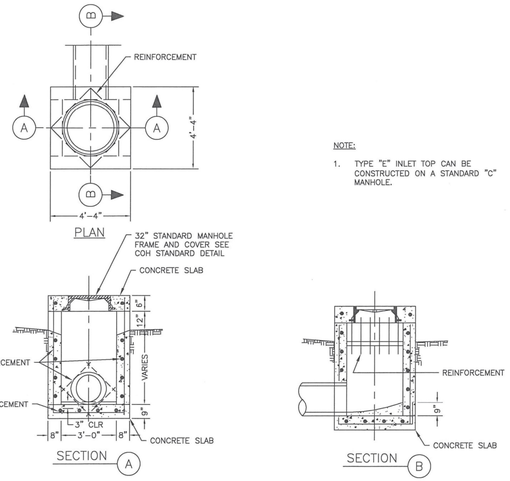

NOTE:

1. TYPE "E" INLET TOP CAN BE CONSTRUCTED ON A STANDARD "C" MANHOLE.

STORM SEWER TYPE "E" INLET
NTS

02632-10

COH IS PHASING OUT BRICK. NEW DETAILS TO BE POSTED END OF 2019

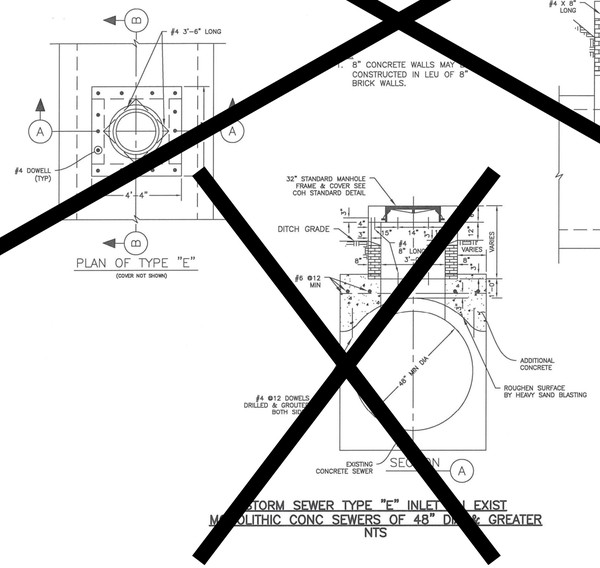

1. 8" CONCRETE WALLS MAY BE CONSTRUCTED IN LEU OF 8" BRICK WALLS.

STORM SEWER TYPE "E" INLET ON EXIST MONOLITHIC CONC SEWERS OF 48" DIA & GREATER
NTS

FIRM INFORMATION	ENGINEER'S SEAL

CITY OF HOUSTON
HOUSTON PUBLIC WORKS

STORM SEWER
02632-09
AND 02632-10

APPROVED BY:	APPROVED BY:
CITY ENGINEER	DEPUTY DIRECTOR
APPROVED BY:	
DIRECTOR	

EFFECTIVE DATE: JUL-01-2019

FOR CITY OF HOUSTON USE ONLY

SHEET NO.

IDS Engineering Group
13430 NW. Freeway, Suite 700
Houston, Tx. 77040
713.462.3178
TxEng Firm 2726 | TxSurv Firm 10110700

SURVEYED BY: KUO & ASSOCIATES, INC.
TBPE FIRM #F-4578; TBPLS FIRM #1007560

THIS DOCUMENT IS RELEASED FOR THE PURPOSE OF REVIEW UNDER THE AUTHORITY OF MARCEL KHOUW, P.E. 101807 ON 12/17/2025. IT IS NOT TO BE USED FOR CONSTRUCTION PURPOSES.

CITY OF HOUSTON
HOUSTON PUBLIC WORKS

LIFT STATION RENEWAL AND REPLACEMENT FY 2023

STORM SEWER DETAILS (SHEET 7 OF 7)

WBS NUMBER	FOR CITY OF HOUSTON USE ONLY
R-000267-0179-4	
DRAWING SCALE	
HORIZ: N.T.S. VERT: N/A	
CITY OF HOUSTON PM	
NAWARAJ PANTA, P.E.	
SHEET NO. 303 OF 321	

DWG. NO.
C-28

PLOTTED: 12/12/2025 10:25 AM

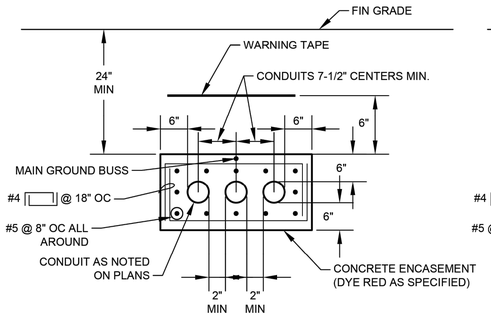

TYP MULTI-CONDUIT DUCTBANK SECTION

NOTE: TIE MAIN GROUNDING BUS TO REBAR AT A MAXIMUM INTERVAL OF EVERY 20 FEET.

DETAIL 1 / NTS

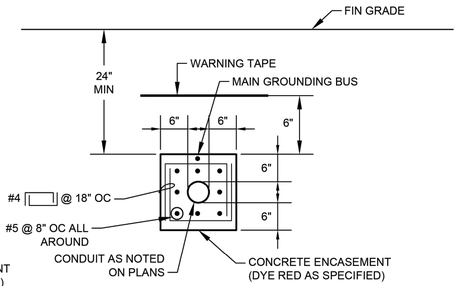

TYP SINGLE-CONDUIT DUCTBANK SECTION

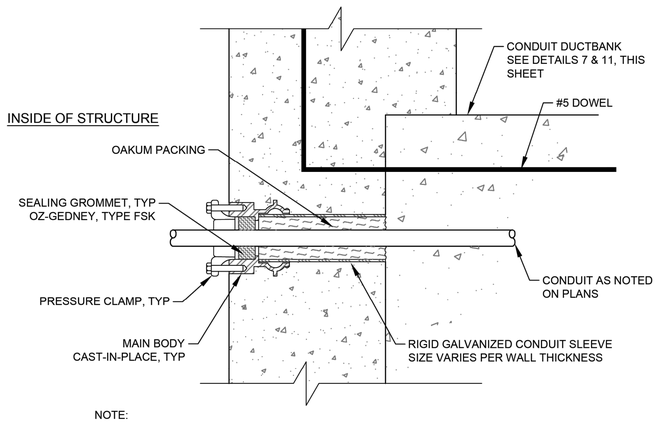

NOTE:

WALL SEAL SHOWN IS TYPICAL FOR EACH CONDUIT IN DUCTBANK.

SINGLE ENDED TYPE

FOR USE WHERE CONDUIT OUTSIDE THE STRUCTURE IS ENCASED IN CONCRETE

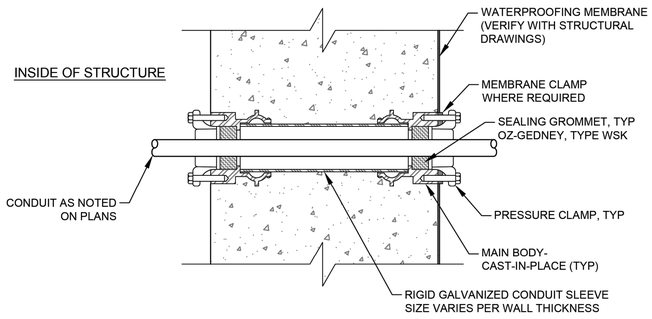

DOUBLE ENDED TYPE WITH MEMBRANE

FOR USE WHERE CONDUIT OUTSIDE THE STRUCTURE IS ENCASED IN CONCRETE

TYPICAL CONDUIT SEALS

DETAIL 4 / NTS

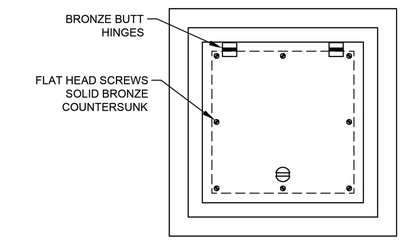

TOP PLAN

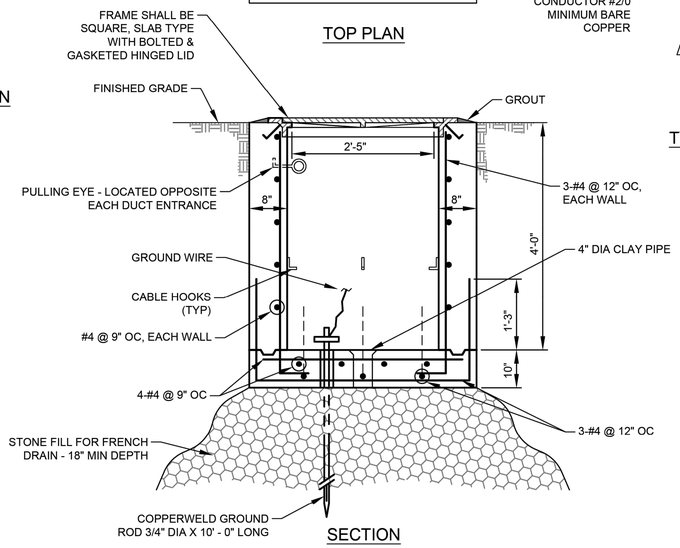

SECTION

TYPICAL ELECTRICAL HANDHOLE CONSTRUCTION

DETAIL 2 / NTS

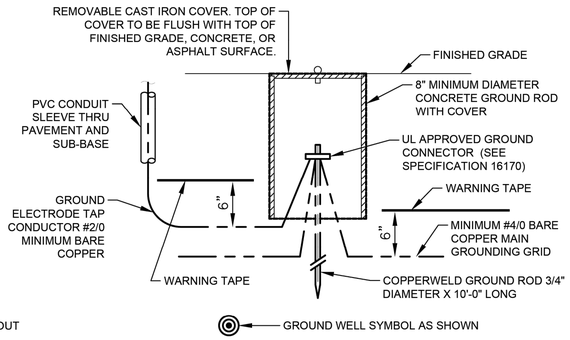

TYPICAL GROUND ROD AND WELL INSTALLATION

DETAIL 3 / NTS

GROUND CONNECTOR SCHEDULE	
WIRE SIZE	BURNDY
#2 AWG	GAR 6426
#2/0 AWG	GAR 6426
#4/0 AWG	GAR 6429
500 kcmil	GAR 6434

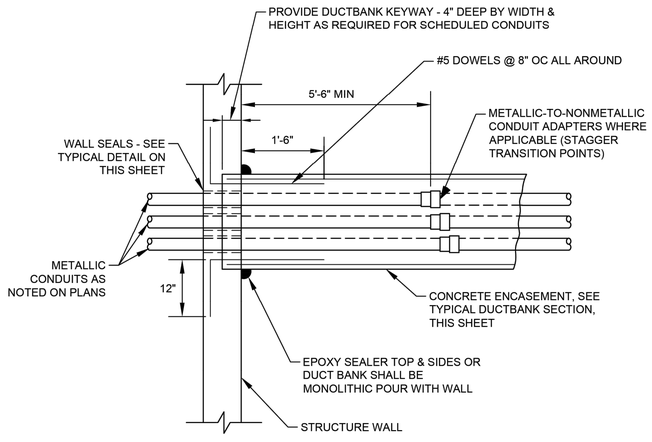

PLAN

TYPICAL DUCTBANK ENTRANCE AT STRUCTURE WALL

DETAIL 5 / NTS

NO.	DATE	REVISION	APP.

FOR INTERIM REVIEW ONLY NOT INTENDED FOR PERMIT, BIDDING OR CONSTRUCTION PURPOSES.
ENGINEER:
HOSS FOROUZAN
P.E. SERIAL NO.77748
12/15/2025

GAI
Gupta & Associates, Inc.
CONSULTING ENGINEERING
Registration No. F-2593
302 Dennis St., Houston, Texas 77006
Tel: 713-636-2936
Fax: 713-636-2987
email: hforouzan@gaiconsulting.com

IDS Engineering Group
13430 NW. Freeway
Suite 700
Houston, Tx. 77040
713.462.3178
TxEng Firm 2726
TxSurv Firm 10110700

CITY OF HOUSTON
HOUSTON PUBLIC WORKS

LIFT STATION RENEWAL AND REPLACEMENT FY 2023

ELECTRICAL TYPICAL DETAILS–I

WBS NUMBER	FOR CITY OF HOUSTON USE ONLY
R-000267-0179-4	
DRAWING SCALE	
HORIZ: VERT:	
CITY OF HOUSTON PM	
NAWARAJ PANTA, P.E.	
DWG. NO. E–01	SHEET NO. 304 OF 321

IDS JOB No. 0057-085-00

FILE PATH: O:\H8108_Lift Station Rehabilitation And Reconstruction (IDS)\6 Drawings\Electrical\Working\General\H8108_E–01.dwg

PLOTTED: 12/12/2025 10:25 AM

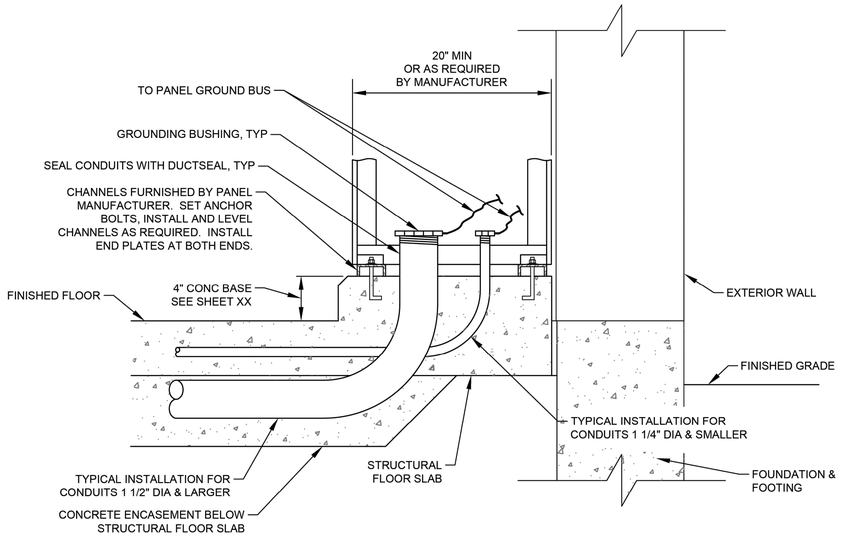

TYPICAL MCC & CONTROL PANEL INSTALLATION & CONDUIT ENTRY

DETAIL 6
NTS -

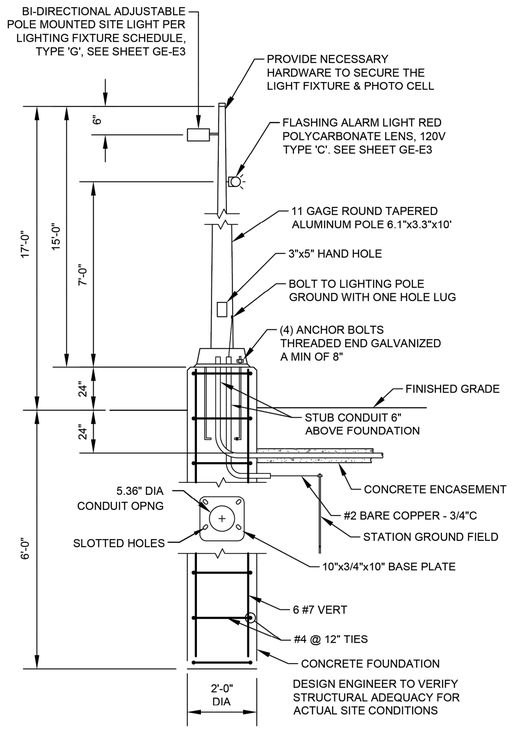

TYPICAL YARD LIGHT

DETAIL 7
NTS -

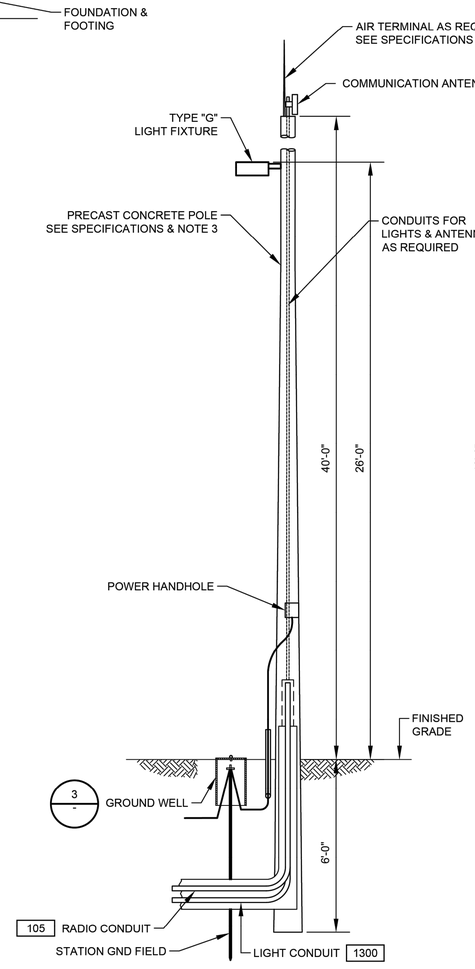

COMMUNICATION POLE MOUNTING DETAIL

DETAIL 8
NTS -

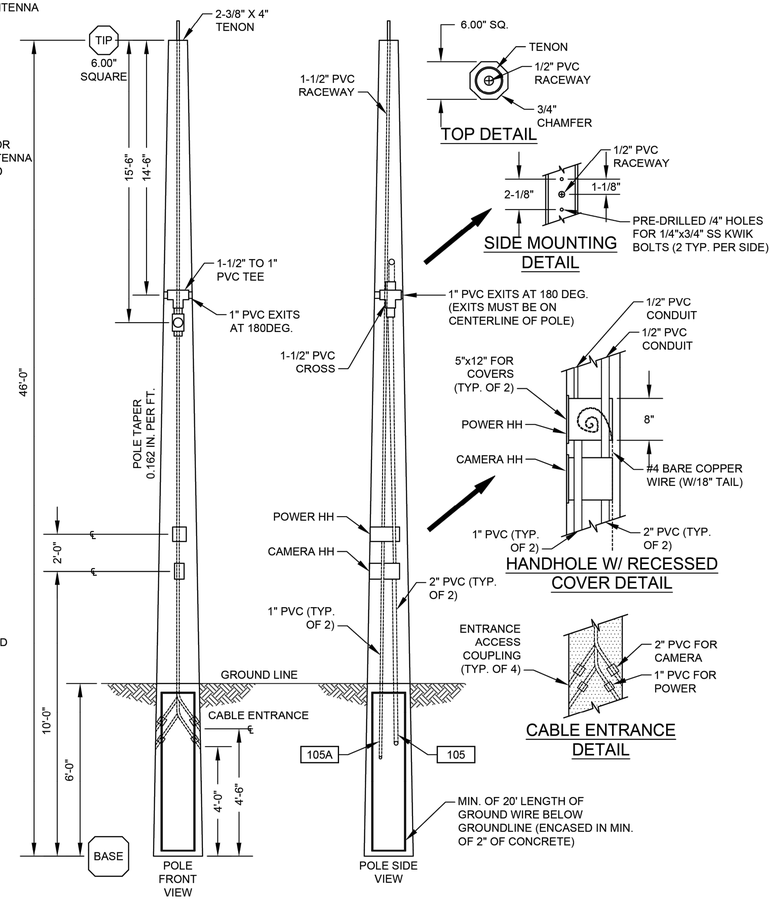

NOTES:

1. ON GROUND WIRE TERMINATION'S, ALL PAINTED OR COATED METAL SURFACES SHALL BE REMOVED AND CLEANED TO BARE METAL. TO OBTAIN A SOUND GROUND CONNECTION. ONCE INSTALLED APPLY PROTECTIVE COATING ON BARE METAL AREAS PER MANUFACTURER REQUIREMENTS.
2. PRECAST CONCRETE POLE TO MOUNT THE RADIO RECEIVER.
3. 1" CONDUIT TO EXTEND TO THE TOP OF POLE FOR ETHERNET CABLE FOR RADIO.

NO.	DATE	REVISION	APP.

FOR INTERIM REVIEW
ONLY NOT INTENDED FOR
PERMIT, BIDDING OR
CONSTRUCTION PURPOSES.
ENGINEER:
HOSS FOROUZAN
P.E. SERIAL NO.77748
12/15/2025

GAI
Gupta & Associates, Inc.
CONSULTING ENGINEERING
Registration No. F-2593
302 Dennis St.,
Houston, Texas 77006
Tel: 713-636-2936
Fax: 713-636-2987
email: hforouzan@gaiconsulting.com

IDS Engineering Group
13430 NW. Freeway
Suite 700
Houston, Tx. 77040
713.462.3178
TxEng Firm 2726
TxSurv Firm 10110700

CITY OF HOUSTON
HOUSTON PUBLIC WORKS

LIFT STATION RENEWAL AND REPLACEMENT FY 2023

ELECTRICAL – TYPICAL DETAILS–II

WBS NUMBER	FOR CITY OF HOUSTON USE ONLY
R-000267-0179-4	
DRAWING SCALE	
HORIZ: VERT:	
CITY OF HOUSTON PM	
NAWARAJ PANTA, P.E.	
DWG. NO. E–02	SHEET NO. 305 OF 321

FILE PATH: O:\H8108_Lift Station Rehabilitation And Reconstruction (IDS)\6 Drawings\Electrical\Working\General\H8108_E–02.dwg

IDS JOB No. 0057-085-00

PLOTTED: 12/12/2025 10:25 AM

FILE PATH: O:\H8108_Lift Station Rehabilitation And Reconstruction (IDS)\6 Drawings\Electrical\1Working\General\H8108_E-03.dwg

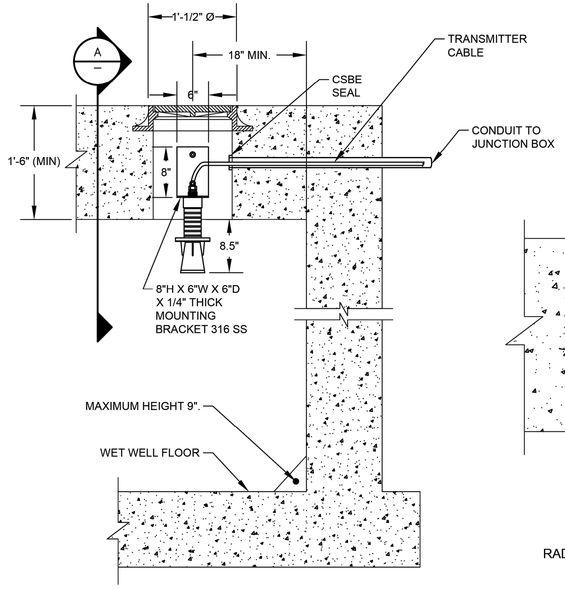

RADAR LEVEL TRANSMITTER MOUNTING
(TYP. LT-1, LT-2)

DETAIL 1
NTS
(SEE NOTE 1, 2, 4 & 5)

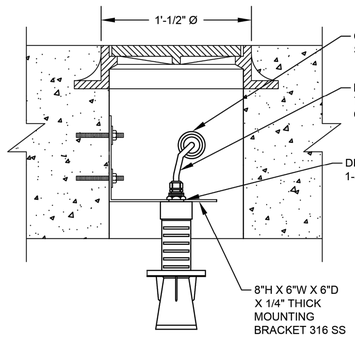

RADAR LEVEL TRANSMITTER MOUNTING
TYP. LT-1 & LT-2

SECTION A
NTS
(SEE NOTE 1, 2, 4 & 5)

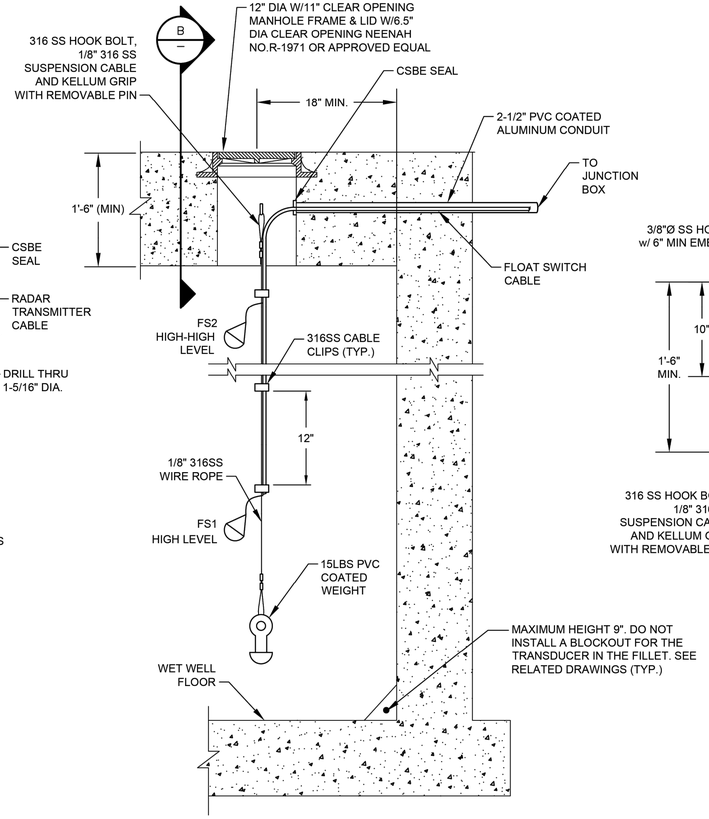

FLOAT SWITCH MOUNTING

DETAIL 2
NTS
(SEE NOTES 3, 4 & 5)

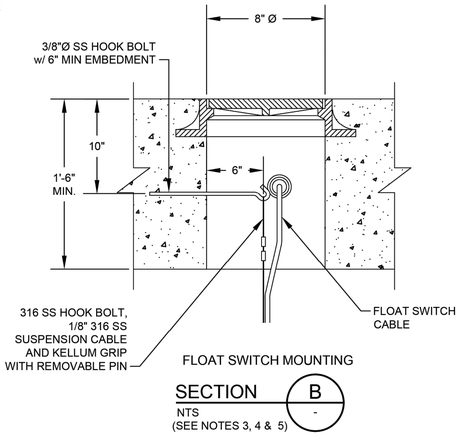

FLOAT SWITCH MOUNTING

SECTION B
NTS
(SEE NOTES 3, 4 & 5)

NOTES:

1. NEW RADAR LEVEL TRANSMITTERS FOR LT-1, LT-2.
2. NEW MANHOLES FOR RADAR LEVEL TRANSMITTERS LT-1, LT-2.
3. NEW MANHOLE FOR FLOAT SWITCHES.
4. PAINT MANHOLE LIDS AND HATCHES HUNTER GREEN.
5. NEW MANHOLE INSTALLATION.
6. RETROFIT MANHOLE INSTALLATION.

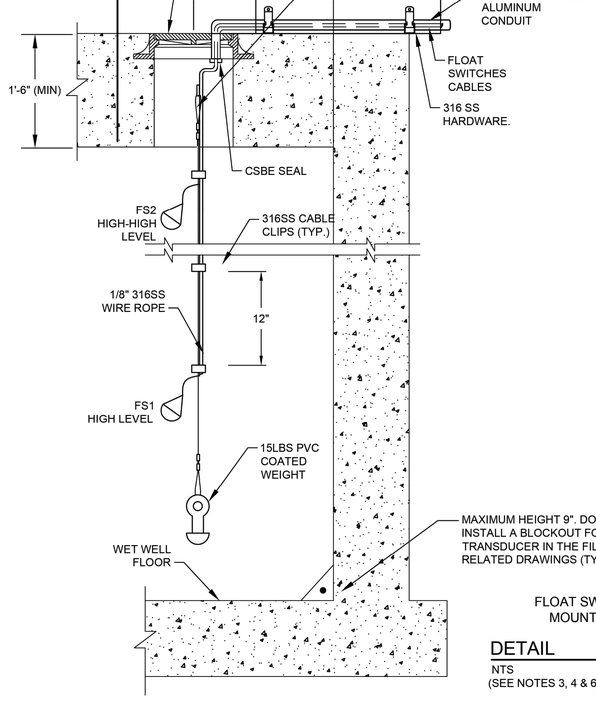

FLOAT SWITCH MOUNTING

DETAIL 3
NTS
(SEE NOTES 3, 4 & 6)

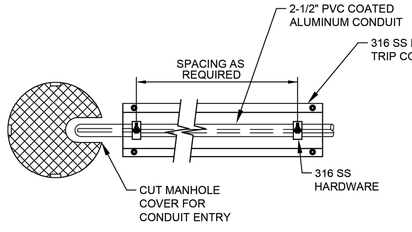

FLOAT SWITCH MOUNTING
TOP VIEW

DETAIL 4
NTS
(SEE NOTES 3, 4 & 6)

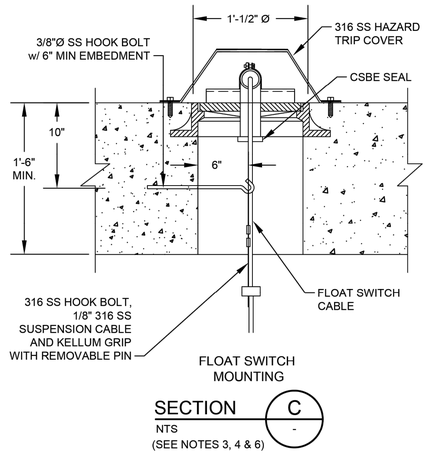

FLOAT SWITCH MOUNTING

SECTION C
NTS
(SEE NOTES 3, 4 & 6)

NO.	DATE	REVISION	APP.

FOR INTERIM REVIEW
ONLY NOT INTENDED FOR
PERMIT, BIDDING OR
CONSTRUCTION PURPOSES.
ENGINEER:
HOSS FOROUZAN
P.E. SERIAL NO.77748
12/15/2025

GAI
Gupta & Associates, Inc.
CONSULTING ENGINEERING
Registration No. F-2593
302 Dennis St.,
Houston, Texas 77006
Tel: 713-636-2936
Fax: 713-636-2987
email: hforouzan@gaiconsulting.com

IDS Engineering Group
13430 NW. Freeway
Suite 700
Houston, Tx. 77040
713.462.3178
TxEng Firm 2726
TxSurv Firm 10110700

CITY OF HOUSTON
HOUSTON PUBLIC WORKS

LIFT STATION RENEWAL AND REPLACEMENT FY 2023

ELECTRICAL – RADAR LEVEL TRANSMITTER GAUGING SYSTEM INSTALLATION & DETAILS–I

WBS NUMBER	FOR CITY OF HOUSTON USE ONLY
R-000267-0179-4	
DRAWING SCALE	
HORIZ: VERT:	
CITY OF HOUSTON PM	
NAWARAJ PANTA, P.E.	
SHEET NO. 306 OF 321	

DWG. NO. E–03

IDS JOB No. 0057-085-00

PLOTTED: 12/12/2025 10:25 AM

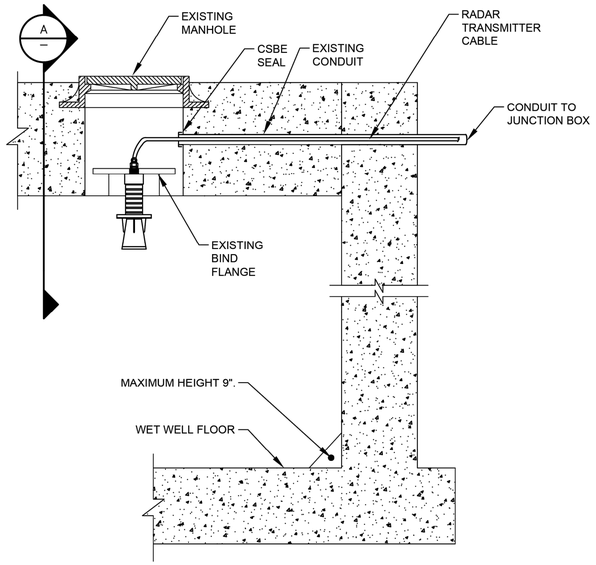

RADAR LEVEL TRANSMITTER MOUNTING
(TYP. LT-1, LT-2)

DETAIL 1
NTS -

(SEE NOTES 1, 2, 4, 6 & 7)

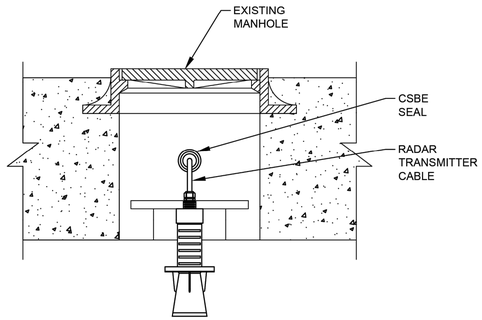

RADAR LEVEL TRANSMITTER MOUNTING
TYP. LT-1 & LT-2

SECTION A
NTS -

(SEE NOTES 1, 2, 4, 6 & 7)

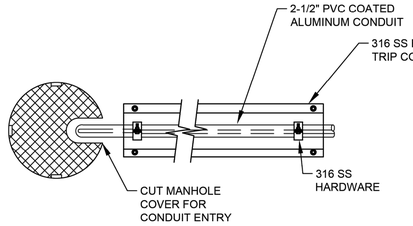

FLOAT SWITCH MOUNTING
TOP VIEW

DETAIL 4
NTS -

(SEE NOTES 1, 4, 5 & 6)

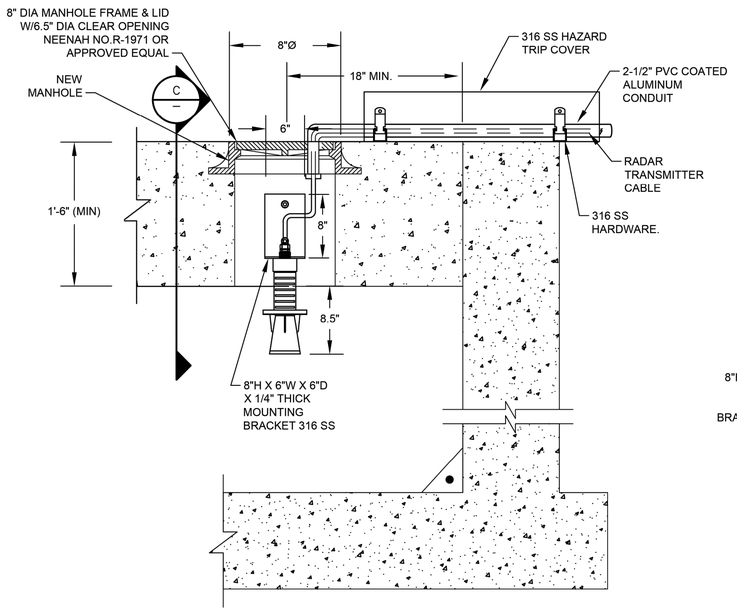

RADAR LEVEL TRANSMITTER MOUNTING
(TYP. LT-1, LT-2)

DETAIL 3
NTS -

(SEE NOTES 1, 4, 5 & 6)

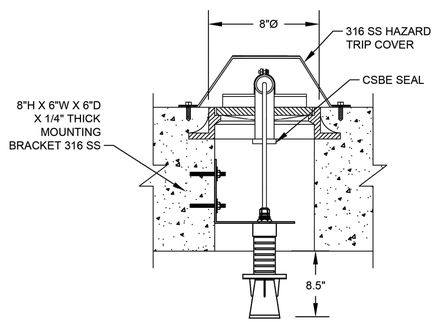

RADAR LEVEL TRANSMITTER MOUNTING
TYP. LT-1 & LT-2

SECTION C
NTS -

(SEE NOTES 1, 4, 5 & 6)

NOTES:

1. NEW RADAR LEVEL TRANSMITTERS FOR LT-1, LT-2.
2. EXISTING AIRCELL MANHOLES FOR RADAR LEVEL TRANSMITTERS LT-1, LT-2.
3. EXISTING SUBMERSIBLE TRANSDUCER MANHOLES FOR RADAR LEVEL TRANSMITTERS LT-1, LT-2.
4. PAINT MANHOLE LIDS AND HATCHES HUNTER GREEN.
5. NEW MANHOLE INSTALLATION.
6. RETROFIT MANHOLE INSTALLATION.
7. DEMOLISH ALL EQUIPMENT ASSOCIATED WITH AIRCELL INSIDE THE WETWELL.

NO.	DATE	REVISION	APP.

FOR INTERIM REVIEW
ONLY NOT INTENDED FOR
PERMIT, BIDDING OR
CONSTRUCTION PURPOSES.
ENGINEER:
HOSS FOROUZAN
P.E. SERIAL NO.77748
12/15/2025

GAI
Gupta & Associates, Inc.
CONSULTING ENGINEERING
Registration No. F-2593
302 Dennis St.,
Houston, Texas 77006
Tel: 713-636-2936
Fax: 713-636-2987
email: hforouzan@gaiconsulting.com

IDS Engineering Group
13430 NW. Freeway
Suite 700
Houston, Tx. 77040
713.462.3178
TxEng Firm 2726
TxSurv Firm 10110700

CITY OF HOUSTON
HOUSTON PUBLIC WORKS

LIFT STATION RENEWAL
AND REPLACEMENT FY 2023

ELECTRICAL – RADAR LEVEL TRANSMITTER GAUGING SYSTEM INSTALLATION & DETAILS–II

WBS NUMBER	FOR CITY OF HOUSTON USE ONLY
R-000267-0179-4	
DRAWING SCALE	
HORIZ: VERT:	
CITY OF HOUSTON PM	
NAWARAJ PANTA, P.E.	
SHEET NO. 307 OF 321	

DWG. NO.
E–04

FILE PATH: O:\H8108_Lift Station Rehabilitation And Reconstruction (IDS)\6 Drawings\Electrical\Working\General\H8108_E–04.dwg

IDS JOB No. 0057-085-00

PLOTTED: 12/17/2025 8:44 AM

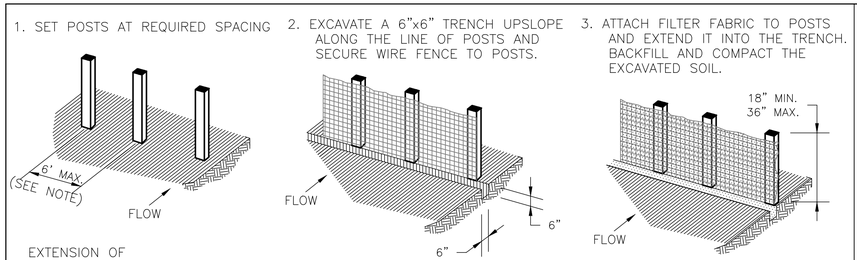

REINFORCED FILTER FABRIC BARRIER

RFB

SYMBOL

GENERAL NOTES:

1. SECURELY FASTEN MESH FENCING TO POSTS WITH STAPLES OR TIE WIRES.
2. SECURELY FASTEN FILTER FABRIC TO MESH FENCING.
3. WHEN TWO SECTIONS OF FILTER FABRIC ADJOIN EACH OTHER, OVERLAP 6 INCHES AT A POST, FOLD TOGETHER, AND ATTACH TO A POST.
4. REMOVE SEDIMENT DEPOSITS WHEN SILT REACHES ONE-THIRD OF THE HEIGHT OF THE FENCE IN DEPTH.
5. SILT FENCE MINIMUM 2' BEHIND CURB.

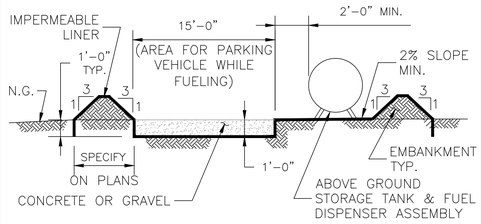

ABOVE GROUND TEMP. VEHICLE & EQUIPMENT FUELING AREA WITH TANK

TFA

SYMBOL

GENERAL NOTES:

1. THE SIZE OF TANK FOUNDATION AREA DEPENDS ON THE SIZE OF ABOVE GROUND STORAGE TANK AND DISPENSER ASSEMBLY.
2. PROVIDE A MINIMUM SLOPE OF 2 % TOWARD THE SUMP PIT.
3. INSTALL IMPERMEABLE LINER AS PER MANUFACTURER'S RECOMMENDATIONS.

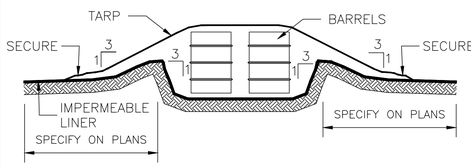

BARREL STORAGE AREA

BSA

SYMBOL

GENERAL NOTES:

1. ALTERNATIVELY, STORE BARRELS IN AN ENCLOSED BUILDING OR SHED.
2. INSTALL IMPERMEABLE LINER AS PER MANUFACTURER'S RECOMMENDATIONS. 60 mil MINIMUM.
3. CONSTRUCT BERMED AREA WITH VOLUME GREATER THAN OR EQUAL TO 110% VOLUME OF BARRELS.

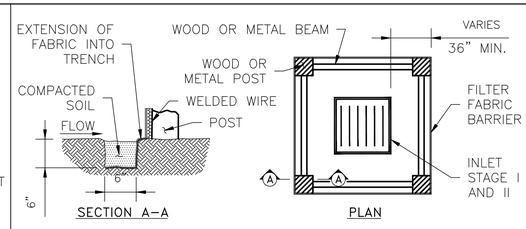

INLET PROTECTION BARRIER WITH REINFORCED FILTER FABRIC

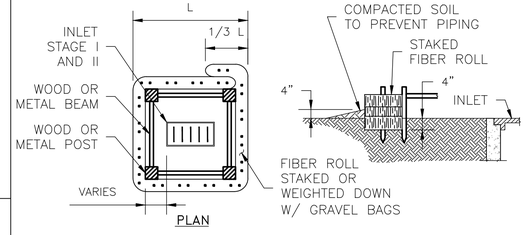

INLET PROTECTION BARRIER WITH FILTER ROLLS

GENERAL NOTES:

1. FIBER ROLLS WILL BE UTILIZED ONLY WHEN SITE CONDITIONS DO NOT PERMIT THE USE OF FILTER FABRIC BARRIER, AND AS APPROVED BY THE ENGINEER.

INLET PROTECTION BARRIERS FOR STAGE I INLETS

IPB

SYMBOL

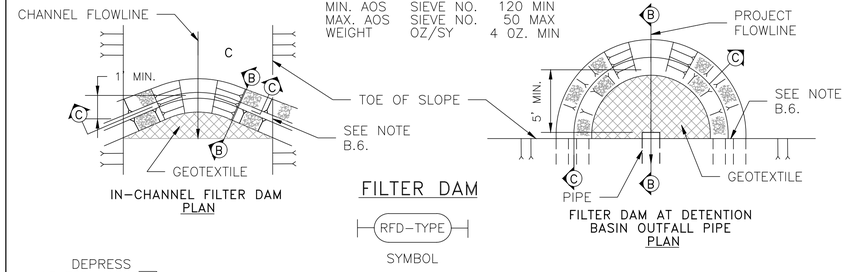

FILTER DAM

RFD-TYPE

SYMBOL

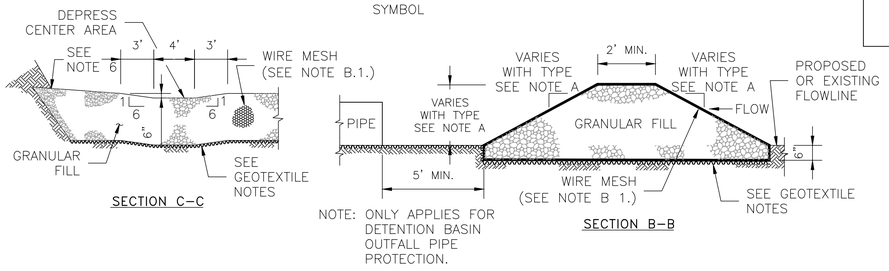

A. TYPES OF FILTER DAMS

1. TYPE 1 (NON-REINFORCED)
   a. HEIGHT – 18-24 INCHES. MEASURE VERTICALLY FROM EXISTING GROUND TO TOP OF FILTER DAM.
   b. TOP WIDTH – 2 FEET (MINIMUM)
   c. SLOPES – 2:1 (MAXIMUM).
2. TYPE 2 (REINFORCED).
   a. HEIGHT – 18-36 INCHES. MEASURE VERTICALLY FROM EXISTING GROUND TO TOP OF FILTER DAM.
   b. TOP WIDTH – 2 FEET (MINIMUM).
   c. SLOPES – 2:1 (MAXIMUM).
3. TYPE 3 (REINFORCED)
   a. HEIGHT – 36-48 INCHES. MEASURE VERTICALLY FROM EXISTING GROUND TO TOP OF FILTER DAM.
   b. TOP WIDTH – 2 FEET (MINIMUM).
   c. SLOPES – 3:1 (MAXIMUM).
4. TYPE 4 (GABION)
   a. HEIGHT – 30 INCHES (MINIMUM). MEASURE VERTICALLY FROM EXISTING GROUND TO TOP OF FILTER DAM.
   b. TOP WIDTH – 2 FEET (MINIMUM).
5. TYPE 5. AS SHOWN ON THE PLANS.

B. CONSTRUCT FILTER DAMS ACCORDING TO THE FOLLOWING CRITERIA UNLESS SHOWN OTHERWISE ON THE PLANS.

1. TYPE 2 AND 3 FILTER DAMS: SECURE WITH 20 GAUGE GALVANIZED WOVEN WIRE MESH WITH 1 INCH DIAMETER HEXAGONAL OPENINGS.
2. PLACE GRANULAR FILL ON THE WIRE MESH TO HEIGHT AND SLOPES SHOWN ON PLANS OR AS SPECIFIED BY THE ENGINEER.
   a. 3-5 INCHES FOR ROCK FILTER DAM TYPES 1, 2 AND 4.
   b. 4-8 INCHES FOR ROCK FILTER DAM TYPE REFER TO GRANULAR FILL IN SPECIFICATION SECTION No. 02378 RIPRAP AND GRANULAR FILL.
3. FOLD WIRE MESH AT UPSTREAM SIDE OVER GRANULAR FILL AND TIGHTLY SECURED TO ITSELF ON THE DOWNSTREAM SIDE USING WIRE TIES OR HOG RINGS.
4. IN STREAMS: SECURE OR STAKE MESH TO STREAM BED PRIOR TO AGGREGATE PLACEMENT.
5. SEE HCFCD SPECIFICATION SECTION NO. 02364-FILTER DAMS.
6. EMBED ONE FOOT MINIMUM INTO SLOPE AND RAISE ONE FOOT HIGHER THAN CENTER OF DEPRESSED AREA AT SLOPE.

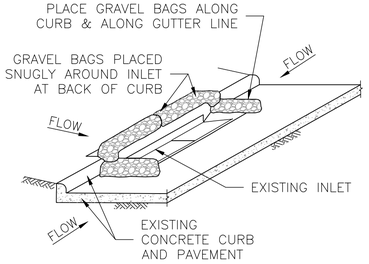

INLET PROTECTION BARRIERS FOR STAGE II INLETS

IPB-II

SYMBOL

GENERAL NOTES:

1. REMOVE SEDIMENT DEPOSIT WHEN THE SEDIMENT HAS ACCUMULATED TO ONE-THIRD THE HEIGHT OF THE BARRIER.
2. GRAVEL BAGS SHALL NOT BLOCK THROAT OF INLET UNLESS DIRECTED BY ENGINEER.

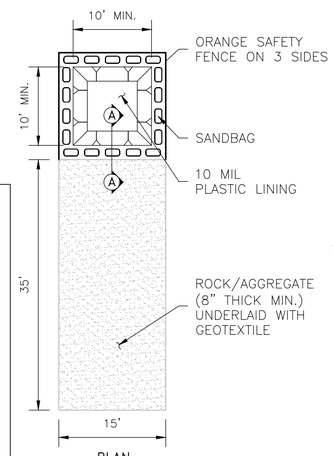

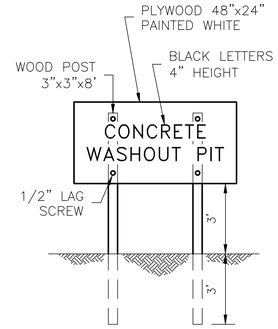

SIGN DETAIL
(OR EQUIVALENT)

GENERAL NOTES:

POST A SIGN READING "CONCRETE WASHOUT PIT" NEXT TO THE PIT.

1. VERBALLY INSTRUCT THE CONCRETE TRUCK DRIVERS WHERE THE PIT IS AND TO WASHOUT THEIR TRUCKS IN THE PIT AND NOWHERE ELSE.
2. UPON THE CONCRETE SETTING UP (CURING, DRYING OUT), THE CONCRETE WASTE SHALL BE REMOVED FROM THE PROJECT SITE AND DISPOSED OF PROPERLY BY THE CONTRACTOR. AFTER REMOVAL OF THE CONCRETE WASTE, THE WASHOUT PIT SHALL BE FILLED WITH CLEAN FILL MATERIAL AND COMPACTED TO IN-SITU CONDITIONS, OR AS DIRECTED BY THE PROJECT SPECIFICATIONS.
3. CONCRETE WASHOUT PITS SHALL NOT BE LOCATED DIRECTLY ADJACENT TO, NOR AT ANY TIME DRAIN INTO THE STORM SEWER SYSTEM OR ANY OTHER SWALE, DITCH, OR WATERWAY.
4. CONSTRUCT ENTRY ROAD AND BOTTOM OF WASHOUT AREA TO SUPPORT EXPECTED LOADINGS FROM TRUCKS EQUIPMENT.

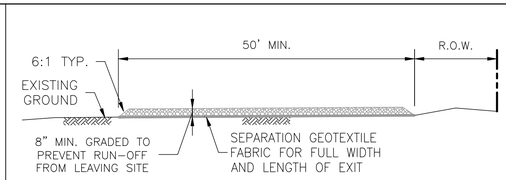

STABILIZED CONSTRUCTION ACCESS

SC-1

SYMBOL

GENERAL NOTES:

1. MINIMUM LENGTH IS AS SHOWN ON CONSTRUCTION DRAWINGS OR 50 FEET, WHICHEVER IS MORE.
2. CONSTRUCT AND MAINTAIN CONSTRUCTION EXIT WITH CONSTANT WIDTH ACROSS ITS LENGTH, INCLUDING ALL POINTS OF INGRESS OR EGRESS.
3. UNLESS SHOWN ON THE CONSTRUCTION DRAWINGS, STABILIZATION FOR OTHER AREAS WILL HAVE THE SAME AGGREGATE THICKNESS AND WIDTH REQUIREMENTS AS THE STABILIZED CONSTRUCTION EXIT.
4. WHEN SHOWN ON THE CONSTRUCTION DRAWINGS, WIDEN OR LENGTHEN STABILIZED AREA TO ACCOMMODATE A TRUCK WASHING AREA. PROVIDE OUTLET SEDIMENT TRAP FOR THE TRUCK WASHING AREA.
5. PROVIDE PERIODIC TOP DRESSING WITH ADDITIONAL COARSE AGGREGATE TO MAINTAIN THE REQUIRED DEPTH OR WHEN SURFACE BECOMES PACKED WITH MUD.
6. PERIODICALLY TURN AGGREGATE TO EXPOSE A CLEAN DRIVING SURFACE.
7. MINIMUM 14' WIDTH FOR ONE WAY TRAFFIC AND 20' WIDTH FOR TWO WAY TRAFFIC.

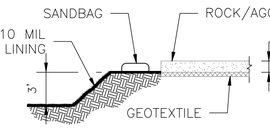

CONCRETE TRUCK WASHOUT AREA

CTW

SYMBOL

NO.	DATE	REVISION	APP.

IDS Engineering Group
13430 NW. Freeway, Suite 700
Houston, Tx. 77040
713.462.3178
TxEng Firm 2726 | TxSurv Firm 10110700

SURVEYED BY: KUO & ASSOCIATES, INC.
TBPE FIRM #F-4578; TBPLS FIRM #1007560

THIS DOCUMENT IS RELEASED FOR THE PURPOSE OF REVIEW UNDER THE AUTHORITY OF MARCEL KHOUW, P.E. 101807 ON 12/17/2025. IT IS NOT TO BE USED FOR CONSTRUCTION PURPOSES.

CITY OF HOUSTON

HOUSTON PUBLIC WORKS

LIFT STATION RENEWAL AND REPLACEMENT FY 2023

STORMWATER POLLUTION PREVENTION DETAILS

WBS NUMBER	FOR CITY OF HOUSTON USE ONLY
R-000267-0179-4	
DRAWING SCALE	
HORIZ: N.T.S. VERT: N/A	
CITY OF HOUSTON PM	
NAWARAJ PANTA, P.E.	
DWG. NO. C-29	SHEET NO. 308 OF 321

FILE PATH: \\tdseg.com\FS\Projects\0000\005708500 CoH Lift Stations - FY 2023\CAD\DWG\PRODUCTION\308-SWPPP DETAILS.dwg

PLOTTED: 12/17/2025 8:44 AM

DocuSign Envelope ID: CB71C116-B716-4899-A5EE-0D2F2CC55AF6

GENERAL NOTES

1. THE CONTRACTOR SHALL PROVIDE AND INSTALL TRAFFIC CONTROL DEVICES IN CONFORMANCE WITH PART VI OF THE TEXAS MANUAL ON UNIFORM TRAFFIC CONTROL DEVICES (TMUTCD) LATEST EDITION WITH REVISIONS DURING THE ENTIRE CONSTRUCTION PERIOD.
2. ALL SIGNS AND TRAFFIC CONTROL DEVICES SHALL CONFORM THE LATEST VERSION OF THE TMUTCD.
3. NO LANES SHALL BE CLOSED DURING THE HOURS OF 7:00 AM TO 9:00 AM AND 4:00 PM TO 6:00 PM MONDAY THRU FRIDAY WITHOUT APPROVAL OF THE CITY TRAFFIC ENGINEER.
4. NO WORK SHALL BE PERFORMED IN RESIDENTIAL AREAS FROM 7:00 PM TO 7:00 AM.
5. CONTRACTOR SHALL MAINTAIN APPROVED NUMBER OF THROUGH LANES OF TRAFFIC IN EACH DIRECTION DURING CONSTRUCTION WORKING HOURS. TRAFFIC CONTROL PLANS SHALL INCLUDE ONE-WAY AND/OR DETOUR PLANS. CONTRACTOR SHALL MAINTAIN ADA COMPLIANT PEDESTRIAN ACCESS TO BUS STOPS AND ADEQUATE BUS ACCESS TO ALL THE BUS STOPS.
6. CONTRACTOR SHALL MAINTAIN TRAFFIC LANES AND DETOURS ACCORDING TO TRAFFIC CONTROL PLANS DURING WORKING HOURS.
7. CONTRACTOR SHALL COVER OPEN PAVEMENT EXCAVATIONS FOR MINOR UTILITY WORK WITH ANCHORED STEEL PLATES DURING NON-WORKING HOURS, AND OPEN LANES FOR NORMAL TRAFFIC FLOW WHEN FEASIBLE.
8. IF THE CONTRACTOR CHOOSES TO USE A DIFFERENT METHOD OF "TRAFFIC CONTROL PLANS" DURING THE CONSTRUCTION THAN WHAT IS OUTLINED IN THE CONTRACT DRAWINGS, THE CONTRACTOR SHALL BE RESPONSIBLE TO PREPARE AND SUBMIT AN ALTERNATE SET OF TRAFFIC CONTROL PLANS TO THE CITY OF HOUSTON PROJECT MANAGER FOR APPROVAL TEN WORKING DAYS PRIOR TO IMPLEMENTATION. THESE PLANS SHALL BE DRAWN TO SCALE ON REPRODUCIBLE MYLARS AND SHALL BE SEALED BY A LICENSED ENGINEER IN THE STATE OF TEXAS. OFFICE OF CITY ENGINEER, MOBILITY PERMITS SECTION REPRESENTATIVE APPROVAL IS REQUIRED TO ACCEPT THE PROPOSED CHANGES.
9. CONTRACTOR SHALL SECURE LANE/SIDEWALK/BICYCLE FACILITY CLOSURE PERMITS FROM OFFICE OF CITY ENGINEER (MOBILITY PERMIT SECTION AT https://geohub.houstontx.gov) BEFORE IMPLEMENTING THE TRAFFIC CONTROL PLAN. THE APPLICATION MUST BE SUBMITTED AT LEAST TEN DAYS PRIOR TO THE IMPLEMENTATION OF THE TRAFFIC CONTROL PLAN AND/OR BEGINNING CONSTRUCTION WORK. THE CONTRACTOR SHALL PROVIDE TRAFFIC CONTROL PLANS, CONSTRUCTION SEQUENCING, AND CONSTRUCTION SCHEDULE WITH THE APPLICATION.
10. CONTRACTOR SHALL HAVE APPROVED TRAFFIC CONTROL PLAN AND PERMIT AT THE JOB SITE FOR INSPECTION AT ALL TIMES.
11. DURING PAVEMENT SURFACE RESTORATION PROJECTS; THE CONTRACTOR SHALL NOT OPEN CLOSED LANES UNTIL THE PAVEMENT SURFACE HAS CURED ENOUGH TO ALLOW VEHICULAR TRAFFIC ACCORDING TO CITY OF HOUSTON STANDARD SPECIFICATIONS.
12. THE CONTRACTOR IS RESPONSIBLE FOR SCHEDULING AND COORDINATING ALL CONSTRUCTION ACTIVITIES WITH STAKE HOLDERS IN THE VICINITY INCLUDING EMERGENCY RESPONSE AGENCIES SUCH AS HOUSTON POLICE DEPARTMENT, HOUSTON FIRE DEPARTMENT, AND METROPOLITAN TRANSIT AUTHORITY.
13. CONTRACTOR SHALL BE RESPONSIBLE FOR ISSUING ALL WORK DIRECTIVES TO ALL SUB-CONTRACTORS, UTILITY COMPANIES, AND ALL OTHER ENTITIES PERFORMING CONSTRUCTION WORK ASSOCIATED WITH THE PROJECT.
14. NOTHING IN THESE NOTES OR PLANS SHALL RELIEVE THE CONTRACTOR OF THE RESPONSIBILITY FOR JOB SITE CONDITIONS DURING THE COURSE OF CONSTRUCTION OF THE PROJECT; INCLUDING SAFETY OF ALL MODES OF TRANSPORTATION, PERSONS, AND PROPERTY, AND THAT THIS REQUIREMENT SHALL APPLY CONTINUOUSLY AND NOT BE LIMITED TO WORKING HOURS.
15. THE OFFICE OF CITY ENGINEER (MOBILITY PERMITS GROUP) PER THE DIRECTION OF THE CITY TRAFFIC ENGINEER HAVE THE RIGHT TO DEMAND THE INSTALLATION OF ADDITIONAL TRAFFIC CONTROL DEVICES OR MODIFICATIONS OF THESE PLANS AND NOTES, AS DEEMED NECESSARY TO PROMOTE THE SAFE AND ORDERLY FLOW OF TRAFFIC, INCLUDING PEDESTRIANS AND BICYCLES, THROUGH THE CONSTRUCTION WORK ZONE. THE CONTRACTOR SHALL COMPLY WITH THESE ADDITIONAL REQUESTS OR MODIFICATIONS WITH DUE DILIGENCE.
16. ALL EXISTING TRAFFIC CONTROL SIGNS AND PAVEMENT MARKINGS SHALL BE MAINTAINED IN VISIBLE LOCATIONS DURING CONSTRUCTION UNLESS PRIOR WRITTEN APPROVAL IS OBTAINED FROM CITY OF HOUSTON PROJECT MANAGER. THE CONTRACTOR SHALL RESTORE OR REPLACE (AT THE DISCRETION OF THE CITY TRAFFIC ENGINEER) ANY PAVEMENT MARKING OR SIGNING DAMAGE DURING CONSTRUCTION OPERATIONS, INCLUDING RAISED PAVEMENT MARKERS (RPMS).
17. WHEN ENTERING OR LEAVING ROADWAYS CARRYING PUBLIC TRAFFIC, THE CONTRACTOR'S EQUIPMENT, WHETHER EMPTY OR LOADED SHALL IN ALL CASES YIELD TO PUBLIC TRAFFIC WITH THE ASSISTANCE OF CONTRACTOR PROVIDED CERTIFIED FLAGGER/PEACE OFFICER.
18. ACCESS TO DRIVEWAYS ADJACENT TO THE CONSTRUCTION WORK ZONE SHALL BE MAINTAINED AT ALL TIMES AS MUCH AS POSSIBLE. ADDITIONAL CONES AND/OR DELINEATORS MAY BE REQUIRED TO DELINEATE THE DRIVEWAY ACCESS ROUTE THROUGH THE CONSTRUCTION WORK ZONE. A MINIMUM OF ONE TRAVEL LANE SHALL BE MAINTAINED ACROSS THE DRIVEWAYS, UNLESS PRIOR WRITTEN APPROVAL IS OBTAINED FROM CITY OF HOUSTON PROJECT MANAGER.
19. SPILLAGE RESULTING FROM HAULING OPERATIONS ALONG OR ACROSS ANY PUBLIC TRAVELED WAY SHALL BE REMOVED IMMEDIATELY BY THE CONTRACTOR.
20. THE CONTRACTOR SHALL SUBMIT AN APPLICATION FOR TEMPORARY PARKING RESTRICTIONS IF THERE ARE PARKING METERS LOCATED AT THE PROPOSED LANE CLOSURES FROM PARKING MANAGEMENT DIVISION (832-393-8690) AT LEAST TEN BUSINESS DAYS BEFORE IMPLEMENTATION OF LANE CLOSURES. IN ADDITION, TEMPORARY NO PARKING SIGNS SHALL BE POSTED 24 HOURS PRIOR TO COMMENCEMENT OF WORK.
21. ADDITIONAL OFF DUTY OFFICERS/FLAGGERS MAY BE REQUESTED TO DIRECT TRAFFIC WHEN LANES ARE BLOCKED AT THE DISCRETION OF THE CITY PROJECT MANAGER EVEN IF THEY ARE NOT SPECIFICALLY IDENTIFIED ON THE PROJECT PLANS.
22. THE CONTRACTOR SHALL REPLACE WITHIN 72 HOURS, ALL TRAFFIC SIGNAL LOOP DETECTORS DAMAGED DURING CONSTRUCTION.
23. IN GENERAL, A SOLAR POWERED FLASHING ARROW BOARD SHALL BE REQUIRED ON ALL MAJOR THOROUGHFARE LANES CLOSURES. EXCEPTIONS TO FLASHING ARROW BOARDS AND/OR IMPLEMENTATION ON RESIDENTIAL LANE CLOSURES SHALL BE APPROVED BY CITY TRAFFIC ENGINEER.
24. APPROVED TRAFFIC CONTROL PLAN SHALL BE IN PLACE BEFORE STARTING ANY EXCAVATION.
25. WATER FILLED BARRIERS CAN BE USED AS INSTRUCTED BY THE ENGINEER AND APPROVED BY THE CITY FOR PROJECTS WHERE SPACE IS LIMITED AND HEAVY EQUIPMENT TO PLACE CONCRETE BARRIERS IS NOT FEASIBLE. WATER FILLED BARRIERS SHALL NOT BE USED ON ROADWAYS WITH A POSTED SPEED LIMIT MORE THAN 45 MPH.
26. WATER FILLED BARRIERS MUST BE INSTALLED AND MAINTAINED PER THE MANUFACTURER'S REQUIREMENTS AND ROUTINELY INSPECTED FOR DEFECTS.
27. IF WATER FILLED BARRIER IS PROVIDED, USE ENVIRONMENTALLY SAFE ANTI-FREEZING AGENT IN THE WATER WHEN IT IS APPLICABLE PER MANUFACTURER SPECIFICATIONS AND RECOVER AGENT WHEN THE BARRIER IS DRAINED.
28. DISPOSE OF WATER AND AGENT PROPERLY. DO NOT DRAIN WATER FILLED BARRIER INTO OR ACROSS AN EXISTING TRAVEL LANE.
29. PROVIDE BARRIER UNITS THAT ARE CAPABLE OF BEING LIFTED AND MOVED WHEN FILLED IF DRAINING IS NOT POSSIBLE.
30. PROVIDE WATER FILLED BARRIER THAT ACTS AS ITS OWN FREE STANDING, NON-REDIRECTIVE END TREATMENT.
31. WHEN WATER FILLED BARRIERS ARE USED TO CHANNELIZE PEDESTRIANS, THEY MUST HAVE A CONTINUOUS DETECTABLE BOTTOM FOR USERS OF LONG CANES AND THE TOP OF THE UNIT SHALL NOT BE LESS THAN 32 INCHES IN HEIGHT.
32. ANY CLOSURE OF A PEDESTRIAN OR BICYCLE FACILITY SHALL REQUIRE THE SHORTEST DETOUR THAT MAINTAINS THE SAFETY OF PEDESTRIAN AND/OR BICYCLISTS.

SPACING FOR CHANNELIZING DEVICES

A. PLASTIC DRUMS ON MERGING TAPER @ 30' C – C WITH CHEVRON SIGN @ 60' C – C AND WARNING LIGHTS FOR OVERNIGHT CLOSURE.

B. PLASTIC DRUMS ON DOWNSTREAM TAPER @ 30' C – C (RETURN TAPER AND BARRICADE ARE OPTIONAL AND DIVIDED ROADWAY SECTION)

C. PLASTIC DRUMS ON RADII @ 35' C –C.

D. PLASTIC DRUMS ON TANGENT @ 35' C – C WITH VERTICAL PANEL AT 70' C – C AND APPROVED WARNING LIGHT @ 70' C – C (FOR OVERNIGHT CLOSURE).

E. PLASTIC DRUMS IN FRONT OF CONSTRUCTION ZONE @ 20' C – C WITH VERTICAL PANEL AT 40' C – C AND APPROVED WARNING LIGHT @ 40' C – C (FOR OVERNIGHT CLOSURE).

F. CONCRETE TRAFFIC BARRIER (CTB) OR LOW PROFILE CONCRETE TRAFFIC BARRIER (LPCTB) WITH APPROVED REFLECTORS @ 10' C – C IF PAVEMENT DROP IS GREATER THAN 1 FOOT.

G. PLASTIC DRUMS W/GUARD RAIL MOUNTED.

H. SELF- RIGHTING VERTICAL PANEL SPACING.
- 4 LANES TO 2 LANES UNDIVIDED ROADWAY SECTION @ 20' C – C.
- 4 LANES DIVIDED ROADWAY TO ONE SIDE TWO WAY ROADWAY @ 20' C – C.
- LEFT LANE AND RIGHT LANE STORAGE BAYS @ 15' C – C.

I. SPACING SHOWN ON TRAFFIC CONTROL SHALL SUPERSEDE THE ABOVE SPACING.

J. SPACING MAY BE ADJUSTED TO PROVIDE DRIVEWAYS, INTERSECTIONS AND /OR MEDIAN OPENINGS.

TABLE C3 – TYPICAL SIGN SPACING, TAPER LENGTHS, AND SUGGESTED SPACING OF CHANNELIZATION DEVICES

POSTED SPEED (MPH)	SIGN SPACING "X" (FEET)	MIN. DESIRABLE TAPER LENGTH "L"			SUGGESTED MAXIMUM SPACING OF DEVICE	
		10' OFFSET	11' OFFSET	12' OFFSET	ON A TAPER	ON A TANGENT
30	120'	150'	165'	180'	30'	60'–75'
35	160'	205'	225'	245'	35'	70'–90'
40	240'	265'	295'	320'	40'	80'–100'
45	320'	450'	495'	540'	45'	90'–110'
50	400'	500'	550'	600'	50'	100'–125'
55	500'	550'	605'	660'	55'	110'–140'

TABLE C4 – STOPPING SIGHT DISTANCE AS A FUNCTION OF SPEED

POSTED SPEED (MPH)	DISTANCE "D" (FEET)
30	200
35	250
40	305
45	360
50	425
55	495

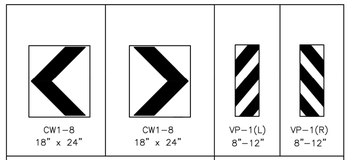

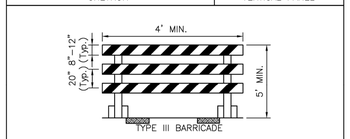

NOTE: STRIPES SHOULD SLOPE DOWNWARDS IN THE DIRECTION TOWARDS WHICH TRAFFIC IS DIRECTED.

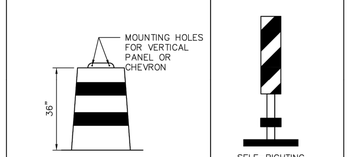

CHANNELIZATION AND BARRICADES

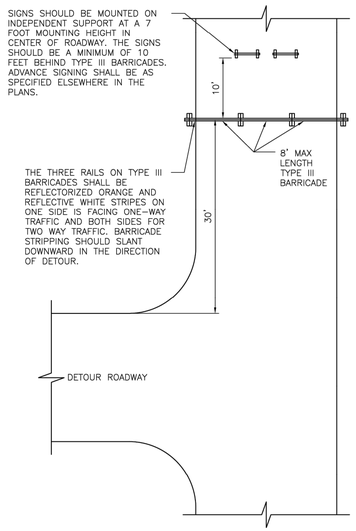

PLAN VIEW
TYPE III BARRICADE (POST AND SKID)
TYPICAL APPLICATION

LEGEND:

- SIGN
- FLAGGER
- APPROVED CHANNELIZATION DEVICE
- BARRICADE
- FLASHING ARROW PANEL
- AREA UNDER CONSTRUCTION
- EXISTING TRAVEL WAY
- TRAFFIC CONTROL PLAN DETOUR TRAVEL WAY

NO.	DATE	REVISION	APP.

APPROVED BY:	APPROVED BY:
DocuSigned by: Suhail Kanwar 3EF6B0C6415478...	DocuSigned by: LINHING NGUYEN 95A29EFDA7084C0...
CITY ENGINEER	CITY TRAFFIC ENGINEER
APPROVED BY: DocuSigned by: Carol Haddock 4B0C41A5F7D1494...	
DIRECTOR OF HOUSTON PUBLIC WORKS	
EFF DATE: NOV–27–2023	DWG NO: 01555–01

CITY OF HOUSTON
HOUSTON PUBLIC WORKS STANDARD

TCP NOTES CHANNELIZING DEVICES AND BARRICADES

FOR CITY OF HOUSTON USE ONLY

DRAWING SCALE
NOT TO SCALE

IDS Engineering Group
13430 NW. Freeway, Suite 700
Houston, Tx. 77040
713.462.3178
TxEng Firm 2726 | TxSurv Firm 10110700

SURVEYED BY: KUO & ASSOCIATES, INC.
TBPE FIRM #F-4578; TBPLS FIRM #1007560

THIS DOCUMENT IS RELEASED FOR THE PURPOSE OF REVIEW UNDER THE AUTHORITY OF MARCEL KHOUW, P.E. 101807 ON 12/17/2025. IT IS NOT TO BE USED FOR CONSTRUCTION PURPOSES.

CITY OF HOUSTON
HOUSTON PUBLIC WORKS

LIFT STATION RENEWAL AND REPLACEMENT FY 2023

TCP NOTES CHANNELIZING DEVICES AND BARRICADES

WBS NUMBER	FOR CITY OF HOUSTON USE ONLY
R–000267–0179–4	
DRAWING SCALE	
HORIZ: N/A VERT: N/A	
CITY OF HOUSTON PM	
NAWARAJ PANTA, P.E.	
SHEET NO. 309 OF 321	

DWG. NO.
TCP–01

DISCLAIMER:
THE USE OF THIS STANDARD IS GOVERNED BY THE TEXAS ENGINEERING PRACTICE ACT. THE DESIGN REQUIREMENTS ON THIS STANDARD DO NOT PURPORT TO ADDRESS ALL OF THE SAFETY CONCERNS ASSOCIATED WITH THEIR USE. THE ENGINEER OF RECORD (EOR) IS TO REVIEW THESE DESIGN REQUIREMENTS AND BY AUTHORIZING THEIR USE, ACCEPTS RESPONSIBILITY FOR THEIR APPLICABILITY, ADEQUACY AND SAFETY. NO WARRANTY OF ANY KIND IS MADE BY THE CITY OF HOUSTON FOR ANY PURPOSES WHATSOEVER. THE CITY OF HOUSTON ASSUMES NO RESPONSIBILITY FOR INCORRECT RESULTS OR DAMAGES RESULTING FROM ITS USE.

FILE PATH: \\dseq\fs\Projects\0000\005708500 CoH Lift Stations – FY 2023\CAD\DWG\PRODUCTION\309–TCP NOTES.dwg

PLOTTED: 12/17/2025 8:44 AM

DocuSign Envelope ID: CB71C116-B716-4899-A5EE-0D2F2CC55AF6

NO.	DATE	REVISION	APP.

A	D	I	J
ROAD WORK AHEAD	END ROAD WORK	RIGHT LANE CLOSED	LEFT LANE CLOSED
CW20-1	G20-2	AHEAD CW20-5(2) CW16-3	AHEAD CW20-5(1) CW16-3

PHASE 1

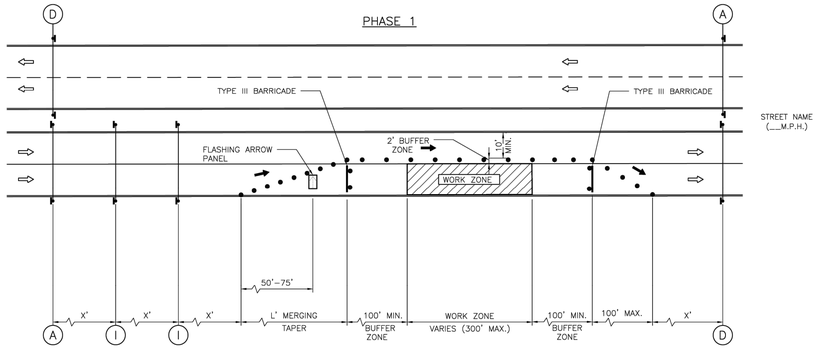

PHASE 2

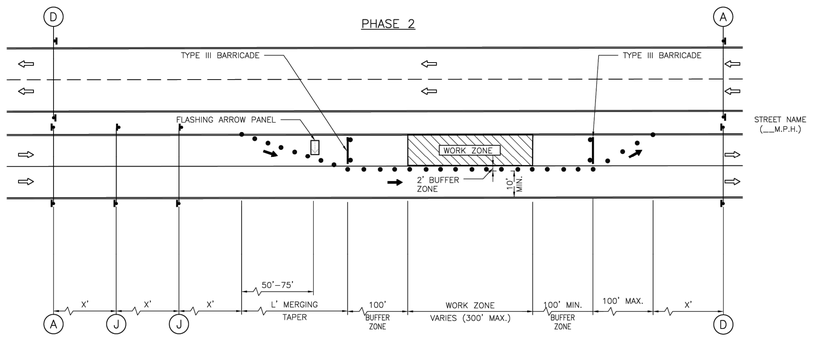

LEGEND:

- SIGN
- FLAGGER
- APPROVED CHANNELIZATION DEVICE
- BARRICADE
- FLASHING ARROW PANEL
- AREA UNDER CONSTRUCTION
- EXISTING TRAVEL WAY
- TRAFFIC CONTROL PLAN DETOUR TRAVEL WAY

NOTES:

1. RETURN TAPERS AND DOWNSTREAM BARRICADES ARE OPTIONAL ON A DIVIDED ROADWAY SECTION.
2. DOUBLE SIGNS SHALL BE USED ONLY ON ROADWAYS WITH MEDIANS.
3. FOR DIMENSIONS REFER TO SHEET 01555-01.
4. INSTALL FLASHERS ON DRUMS WHERE REQUIRED AND APPROVED BY CITY TRAFFIC ENGINEER.

APPROVED BY:	APPROVED BY:
DocuSigned by: Sukul Banawar — 8E1B5D3C4F3A7A...	DocuSigned by: HANG NGUYEN — 3A2A1B7C2D4E5F...
CITY ENGINEER	CITY TRAFFIC ENGINEER
APPROVED BY: DocuSigned by: Carl Haddock — 4A5C6D7E8F9A0B...	
DIRECTOR OF HOUSTON PUBLIC WORKS	
EFF DATE: NOV-27-2023	DWG NO: 01555-04

CITY OF HOUSTON
HOUSTON PUBLIC WORKS STANDARD

TCP ONE LANE CLOSURE
PHASE 1 & 2

DRAWING SCALE	FOR CITY OF HOUSTON USE ONLY
NOT TO SCALE	

DISCLAIMER:
THE USE OF THIS STANDARD IS GOVERNED BY THE TEXAS ENGINEERING PRACTICE ACT. THE DESIGN REQUIREMENTS ON THIS STANDARD DO NOT PURPORT TO ADDRESS ALL OF THE SAFETY CONCERNS ASSOCIATED WITH THEIR USE. THE ENGINEER OF RECORD (EOR) IS TO REVIEW THESE DESIGN REQUIREMENTS AND BY AUTHORIZING THEIR USE ACCEPTS RESPONSIBILITY FOR THEIR APPLICABILITY, ADEQUACY AND SAFETY. NO WARRANTY OF ANY KIND IS MADE BY THE CITY OF HOUSTON FOR ANY PURPOSES WHATSOEVER. THE CITY OF HOUSTON ASSUMES NO RESPONSIBILITY FOR INCORRECT RESULTS OR DAMAGES RESULTING FROM ITS USE.

IDS Engineering Group
13430 NW. Freeway, Suite 700
Houston, Tx. 77040
713.462.3178
TxEng Firm 2726 | TxSurv Firm 10110700

THIS DOCUMENT IS RELEASED FOR THE PURPOSE OF REVIEW UNDER THE AUTHORITY OF MARCEL KHOUW, P.E. 101807 ON 12/17/2025. IT IS NOT TO BE USED FOR CONSTRUCTION PURPOSES.

SURVEYED BY: KUO & ASSOCIATES, INC.
TBPE FIRM #F-4578; TBPLS FIRM #1007560

CITY OF HOUSTON
HOUSTON PUBLIC WORKS

LIFT STATION RENEWAL AND REPLACEMENT FY 2023

TCP ON-LANE CLOSURE PHASE 1 & 2

WBS NUMBER	FOR CITY OF HOUSTON USE ONLY
R-000267-0179-4	
DRAWING SCALE	
HORIZ: N/A VERT: N/A	
CITY OF HOUSTON PM	
NAWARAJ PANTA, P.E.	
SHEET NO. 310 OF 321	

DWG. NO.
TCP-02

FILE PATH: \\dseg.com\FS\Projects\0000\005708500 CoH Lift Stations - FY 2023\CAD\DWG\PRODUCTION\310-TCP ONE-LANE CLOSURE.dwg

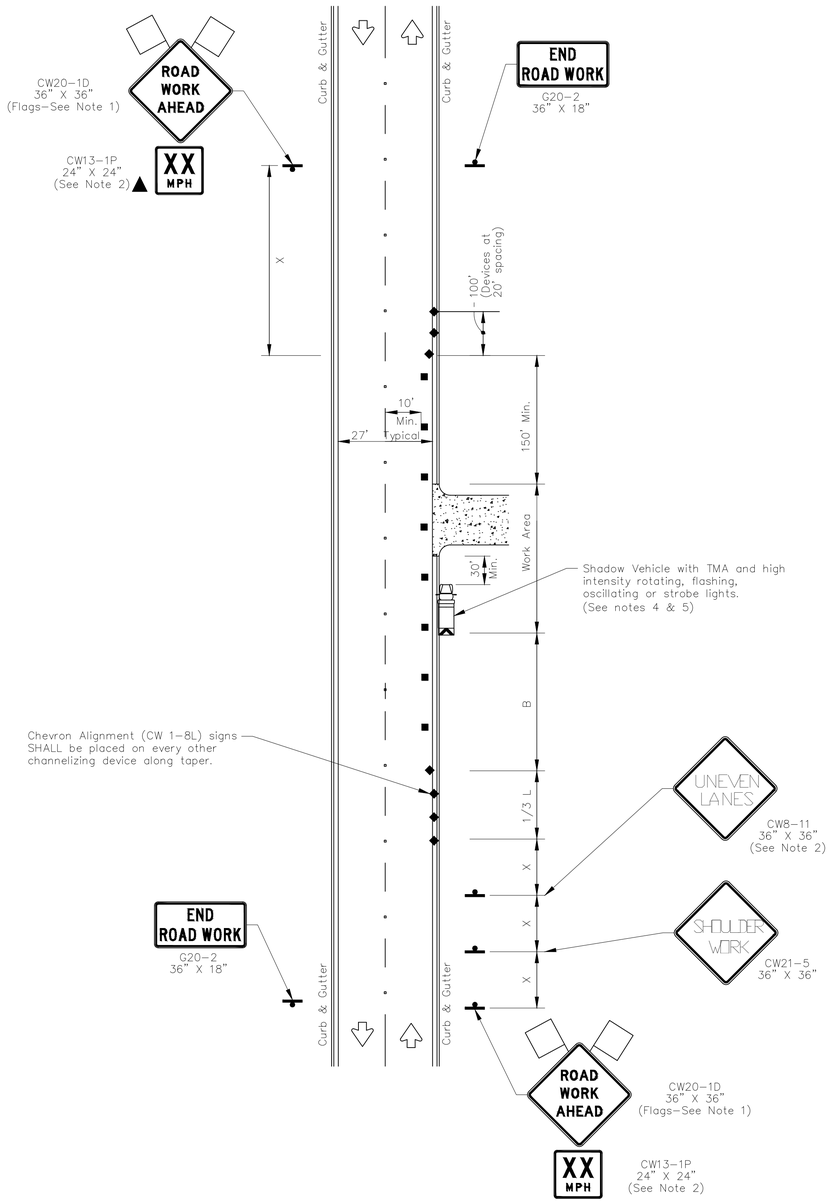

DRIVEWAY TIE-IN ON TWO-LANE ROAD

TRAFFIC CONTROL PLAN SECTION SHALL BE COMPLETED BY ENGINEER

ROADWAY	POSTED SPEED	TAPER LENGTH	SPACING CHANNELIZING DEVICES		SIGN SPACING	BUFFER SPACE
			TAPER	TANGENT		
LOCKWOOD	35		35'	70'	160'	120'
SCOTT #3	35		35'	70'	160'	120'
WOODFOREST	40		30'	60'	120'	90'

LEGEND			
	Type 3 Barricade		Channelizing Devices
	Heavy Work Vehicle		Truck Mounted Attenuator (TMA)
	Trailer Mounted Flashing Arrow Board	M	Portable Changeable Message Sign (PCMS)
	Sign		Traffic Flow
	Flag		Flagger

Posted Speed *	Formula	Minimum Desirable Taper Lengths "L" * *			Suggested Maximum Spacing of Channelizing Devices		Minimum Sign Spacing "X" Distance	Suggested Longitudinal Buffer Space "B"
		10' Offset	11' Offset	12' Offset	On a Taper	On a Tangent		
30	$L=\frac{WS^2}{60}$	150'	165'	180'	30'	60'	120'	90'
35		205'	225'	245'	35'	70'	160'	120'
40		265'	295'	320'	40'	80'	240'	155'
45	L=WS	450'	495'	540'	45'	90'	320'	195'
50		500'	550'	600'	50'	100'	400'	240'
55		550'	605'	660'	55'	110'	500'	295'
60		600'	660'	720'	60'	120'	600'	350'
65		650'	715'	780'	65'	130'	700'	410'
70		700'	770'	840'	70'	140'	800'	475'
75		750'	825'	900'	75'	150'	900'	540'

* Conventional Roads Only

** Taper lengths have been rounded off.
L=Length of Taper(FT) W=Width of Offset(FT) S=Posted Speed(MPH)

GENERAL NOTES

1. Flags attached to signs where shown are OPTIONAL.
2. All traffic control devices illustrated are REQUIRED, except those denoted with the triangle symbol are OPTIONAL.
3. Inactive work vehicles or other equipment should be parked near the right-of-way line and not parked on the paved shoulder.
4. A Shadow Vehicle with a TMA should be used anytime it can be positioned 30 to 100 feet in advance of the area of crew exposure without adversely affecting the performance or quality of the work. If workers are no longer present but road or work conditions require the traffic control to remain in place, Type 3 Barricades or other channelizing devices may be substituted for the Shadow Vehicle and TMA.
5. Additional Shadow Vehicles with TMAs may be positioned off the paved surface, next to those shown in order to protect wider work spaces.
6. Contractor shall provide and install traffic control devices in conformance with part VI of Texas Manual on Uniform Traffic Control Devices (TMUTCD - Latest edition with revisions) during construction.
7. No lanes shall be blocked during construction.
8. If project is within 400 feet from a signalized intersection, the Contractor shall contact the Engineer at (832) 590-7117 or (832) 590-7175 five (5) days prior to the start of construction.

NO.	DATE	REVISION	APP.

IDS Engineering Group
13430 NW. Freeway, Suite 700
Houston, Tx. 77040
713.462.3178
TxEng Firm 2726 | TxSurv Firm 10110700

SURVEYED BY: KUO & ASSOCIATES, INC.
TBPE FIRM #F-4578; TBPLS FIRM #1007560

THIS DOCUMENT IS RELEASED FOR THE PURPOSE OF REVIEW UNDER THE AUTHORITY OF MARCEL KHOUW, P.E. 101807 ON 12/17/2025. IT IS NOT TO BE USED FOR CONSTRUCTION PURPOSES.

CITY OF HOUSTON
HOUSTON PUBLIC WORKS

LIFT STATION RENEWAL AND REPLACEMENT FY 2023

DRIVEWAY TIE-IN ON TWO-LANE ROAD

WBS NUMBER	FOR CITY OF HOUSTON USE ONLY
R-000267-0179-4	
DRAWING SCALE	
HORIZ: N.T.S. VERT: N/A	
CITY OF HOUSTON PM	
NAWARAJ PANTA, P.E.	

DWG. NO.	SHEET NO. 311 OF 321
TCP-03	

PLOTTED: 12/17/2025 8:44 AM
FILE PATH: \\idseg.com\FS\Projects\0000\005708500 CoH Lift Stations - FY 2023\CAD\DWG\PRODUCTION\311-TCP DRIVEWAY TIE-IN.dwg



N.T.S.

LEGEND

⇨ PROPOSED TRAFFIC PATTERN

CONSTRUCTION ZONE

NO.	DATE	REVISION	APP.

IDS Engineering Group
13430 NW. Freeway, Suite 700
Houston, Tx. 77040
713.462.3178
TxEng Firm 2726 | TxSurv Firm 10110700

SURVEYED BY: KUO & ASSOCIATES, INC.
TBPE FIRM #F-4578; TBPLS FIRM #1007560

THIS DOCUMENT IS RELEASED FOR THE PURPOSE OF REVIEW UNDER THE AUTHORITY OF MARCEL KHOUW, P.E. 101807 ON 12/17/2025. IT IS NOT TO BE USED FOR CONSTRUCTION PURPOSES.

CITY OF HOUSTON
HOUSTON PUBLIC WORKS

LIFT STATION RENEWAL AND REPLACEMENT FY 2023

TRAFFIC CONTROL PLAN LOCKWOOD LIFT STATION

WBS NUMBER	FOR CITY OF HOUSTON USE ONLY
R-000267-0179-4	
DRAWING SCALE	
HORIZ: N.T.S. VERT: N/A	
CITY OF HOUSTON PM	
NAWARAJ PANTA, P.E.	

DWG. NO.	SHEET NO. 312 OF 321
TCP-04	

PLOTTED: 12/17/2025 8:44 AM
FILE PATH: \\idseg.com\FS\Projects\0000\005708500 CoH Lift Stations - FY 2023\CAD\DWG\PRODUCTION\312-TRAFFIC CONTROL PLAN - LOCKWOOD LIFT STATION.dwg

PLOTTED: 12/17/2025 8:44 AM

FILE PATH: \\idseg.com\FS\Projects\0000\005708500 CoH Lift Stations - FY 2023\CAD\DWG\PRODUCTION\313-TRAFFIC CONTROL PLAN - SCOTT STREET LIFT STATION.dwg



NO.	DATE	REVISION	APP.

N.T.S.

LEGEND

⇨ PROPOSED TRAFFIC PATTERN

CONSTRUCTION ZONE

NOTES:

1. CLOSURE OF THE ESPLANADE AND INSIDE LANE CLOSURE NOT TO OCCUR AT THE SAME TIME AS THE PROPOSED OUTSIDE LANE CLOSURE. CONTRACTOR TO MAINTAIN ONE SOUTHBOUND LANE ON SCOTT STREET AT ALL TIMES.

IDS Engineering Group
13430 NW. Freeway, Suite 700
Houston, Tx. 77040
713.462.3178
TxEng Firm 2726 | TxSurv Firm 10110700

SURVEYED BY: KUO & ASSOCIATES, INC.
TBPE FIRM #F-4578; TBPLS FIRM #1007560

THIS DOCUMENT IS RELEASED FOR THE PURPOSE OF REVIEW UNDER THE AUTHORITY OF MARCEL KHOUW, P.E. 101807 ON 12/17/2025. IT IS NOT TO BE USED FOR CONSTRUCTION PURPOSES.

CITY OF HOUSTON
HOUSTON PUBLIC WORKS

LIFT STATION RENEWAL AND REPLACEMENT FY 2023

TRAFFIC CONTROL PLAN SCOTT STREET NO. 3 LIFT STATION

WBS NUMBER	FOR CITY OF HOUSTON USE ONLY
R-000267-0179-4	
DRAWING SCALE	
HORIZ: N.T.S. VERT: N/A	
CITY OF HOUSTON PM	
NAWARAJ PANTA, P.E.	
SHEET NO. 313 OF 321	

DWG. NO.
TCP-05

PLOTTED: 12/17/2025 8:44 AM

FILE PATH: \\idseg.com\FS\Projects\0000\005708500 CoH Lift Stations - FY 2023\CAD\DWG\PRODUCTION\314-TRAFFIC CONTROL PLAN - MARKET STREET LIFT STATION.dwg



N.T.S.

NO.	DATE	REVISION	APP.

IDS Engineering Group
13430 NW. Freeway, Suite 700
Houston, Tx. 77040
713.462.3178
TxEng Firm 2726 | TxSurv Firm 10110700

SURVEYED BY: KUO & ASSOCIATES, INC.
TBPE FIRM #F-4578; TBPLS FIRM #1007560

THIS DOCUMENT IS RELEASED FOR THE PURPOSE OF REVIEW UNDER THE AUTHORITY OF MARCEL KHOUW, P.E. 101807 ON 12/17/2025. IT IS NOT TO BE USED FOR CONSTRUCTION PURPOSES.

CITY OF HOUSTON
HOUSTON PUBLIC WORKS

LIFT STATION RENEWAL AND REPLACEMENT FY 2023

TRAFFIC CONTROL PLAN MARKET STREET NO. 2 LIFT STATION

WBS NUMBER	FOR CITY OF HOUSTON USE ONLY
R-000267-0179-4	
DRAWING SCALE	
HORIZ: N.T.S. VERT: N/A	
CITY OF HOUSTON PM	
NAWARAJ PANTA, P.E.	
SHEET NO. 314 OF 321	

DWG. NO.
TCP-06

P102-00-00

PLOTTED: 12/17/2025 8:45 AM

FILE PATH: \\tdseg.com\FS\Projects\0000\005708500 CoH Lift Stations - FY 2023\CAD\DWG\PRODUCTION\315-TRAFFIC CONTROL PLAN - WOODFOREST LIFT STATION.dwg



N.T.S.

NO.	DATE	REVISION	APP.

IDS Engineering Group
13430 NW. Freeway, Suite 700
Houston, Tx. 77040
713.462.3178
TxEng Firm 2726 | TxSurv Firm 10110700

SURVEYED BY: KUO & ASSOCIATES, INC.
TBPE FIRM #F-4578; TBPLS FIRM #1007560

THIS DOCUMENT IS RELEASED FOR THE PURPOSE OF REVIEW UNDER THE AUTHORITY OF MARCEL KHOUW. P.E. 101807 ON 12/17/2025. IT IS NOT TO BE USED FOR CONSTRUCTION PURPOSES.

CITY OF HOUSTON
HOUSTON PUBLIC WORKS

LIFT STATION RENEWAL AND REPLACEMENT FY 2023

TRAFFIC CONTROL PLAN WOODFOREST LIFT STATION

WBS NUMBER	FOR CITY OF HOUSTON USE ONLY
R-000267-0179-4	
DRAWING SCALE	
HORIZ: N.T.S. VERT: N/A	
CITY OF HOUSTON PM	
NAWARAJ PANTA, P.E.	

DWG. NO.	SHEET NO.
TCP-07	315 OF 321

PLOTTED: 12/9/2025 6:56 PM

FILE PATH: C:\Users\Ned\Desktop\UPCOMING PROJECTS\IDS WBS No. R-000267-0179-4 LIFT STATION\01-LOCKWOOD SITE ACCESS-TP.dwg



60' 0' 60'
SCALE
1" = 60'

Tree No.	Location	Description	Chapter 33 Status	Comments	Treatment
Trees on Lockwood Lift station Site					
1	Not available	10" Live Oak	Not protected	Private tree	Clearance prune
2	Not available	13" Live Oak	Not protected	Private tree	Clearance prune
3	Not available	15" Mulberry	Not protected	Remove in clearing&grubbing	Remove tree, No replacement required
4	Not available	10" Mulberry	Not protected	Remove in clearing&grubbing	Remove tree, No replacement required
5	Not available	5" Lacebark Elm	Protected	Remove in clearing&grubbing	Remove tree, Provide 5" in replacement or mitigation
6	Not available	8" Lacebark Elm	Protected	Remove in clearing&grubbing	Remove tree, Provide 8" in replacement or mitigation
7	Not available	6" Lacebark Elm	Protected	Remove in clearing&grubbing	Remove tree, Provide 6" in replacement or mitigation
8	Not available	4" Sugarberry	Not protected	Remove in clearing&grubbing	Remove tree, No replacement required
9	Not available	8" Sugarberry	Not protected	Remove in clearing&grubbing	Remove tree, No replacement required

TREE PRESERVATION PLAN LEGEND

1 TREE NUMBER/LOCATION
(1) TREE TO BE REMOVED
TREE PROTECTION FENCE

NO.	DATE	REVISION	APP.

C.N. Koehl
Urban Forestry, Inc.
210 Stone Bush Ct. ◦ Katy, Texas 77493
281-391-0022 ckoehl@koehlurbanforestry.com

APPROVED:

IDS Engineering Group
13430 NW. Freeway
Suite 700
Houston, Tx. 77040
713.462.3178
TxEng Firm 2726
TxSurv Firm 10110700

CITY OF HOUSTON
HOUSTON PUBLIC WORKS

LIFT STATION RENEWAL AND REPLACEMENT FY 2023

TREE PROTECTION PLAN SHEET 1 OF 6

WBS NUMBER	FOR CITY OF HOUSTON USE ONLY
X-000X00-0000-X	
DRAWING SCALE	
HORIZ: 1"=40' VERT:	
CITY OF HOUSTON PM	
NAWARAJ PANTA, P.E.	
SHEET NO. 316 OF 321	

DWG. NO.
TPP-01

PLOTTED: 12/9/2025 6:56 PM

Tree No.	Location	Description	Chapter 33 Status	Comments	Treatment
Trees on Lockwood Lift station Site					
9	Not available	8" Sugarberry	Not protected	Remove in clearing&grubbing	Remove tree, No replacement required
10	Not available	10" Sugarberry	Not protected		Clearance prune
11	Not available	17" Sugarberry	Not protected	Private tree, Not impacted	
12	Not available	9" Sugarberry	Not protected	Private tree	Clearance prune

10' 0' 10'
SCALE
1"=10'

NO.	DATE	REVISION	APP.

TREE PRESERVATION PLAN LEGEND

- 1 — TREE NUMBER/LOCATION
- (1) — TREE TO BE REMOVED
- —X— TREE PROTECTION FENCE

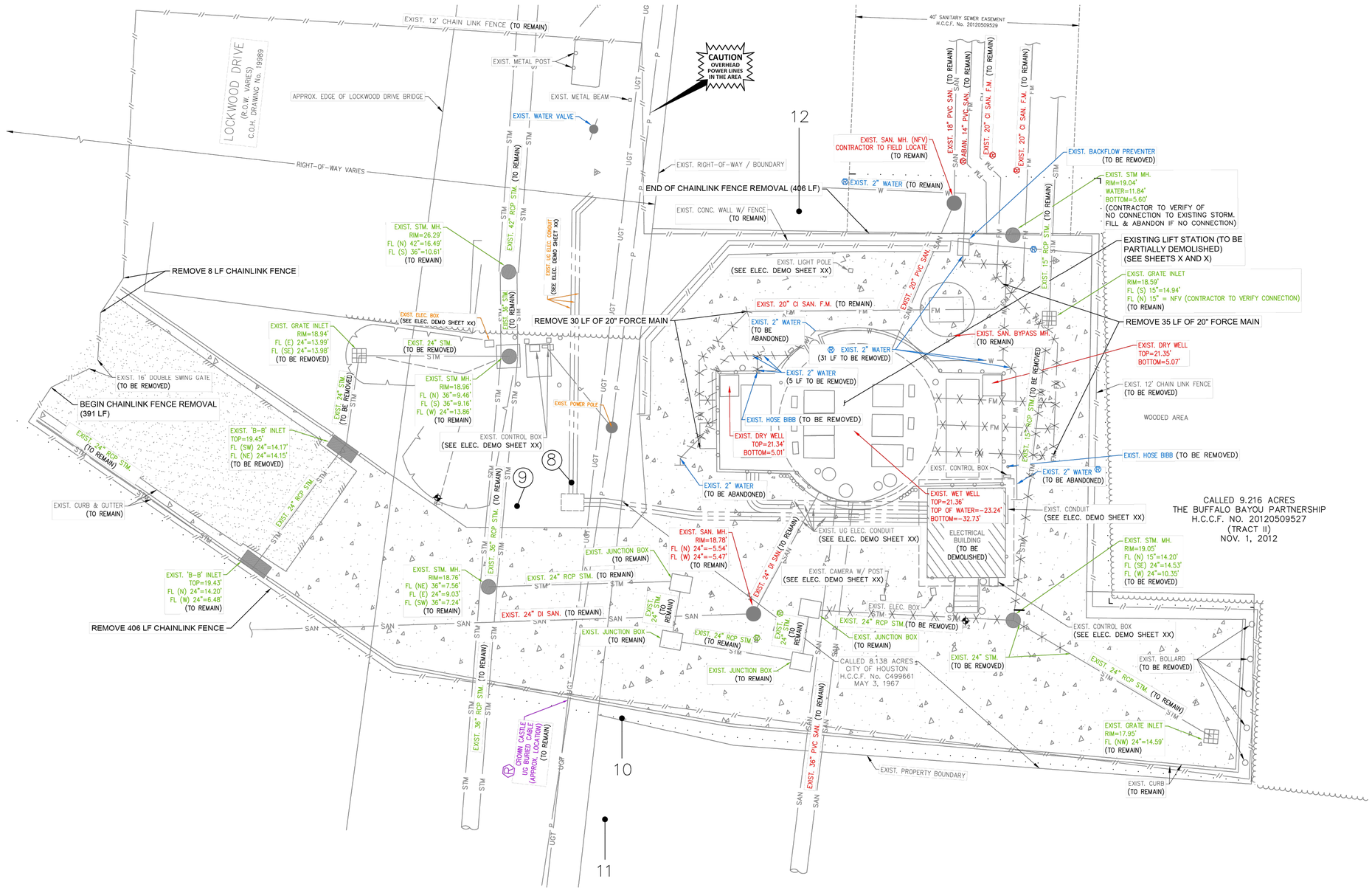

C.N. Koehl
Urban Forestry, Inc.
210 Stone Bush Ct. ◦ Katy, Texas 77493
281-391-0022 ckoehl@koehlurbanforestry.com

APPROVED:

IDS Engineering Group
13430 NW. Freeway
Suite 700
Houston, Tx. 77040
713.462.3178
TxEng Firm 2726
TxSurv Firm 10110700

CITY OF HOUSTON
HOUSTON PUBLIC WORKS

LIFT STATION RENEWAL AND REPLACEMENT FY 2023
TREE PROTECTION PLAN
SHEET 2 OF 6

WBS NUMBER	FOR CITY OF HOUSTON USE ONLY
X-000X00-0000-X	
DRAWING SCALE	
HORIZ: 1"=40' VERT:	
CITY OF HOUSTON PM	
NAWARAJ PANTA, P.E.	
SHEET NO. 317 OF 321	

DWG. NO. TPP-02

FILE PATH: C:\Users\Ned\Desktop\UPCOMING PROJECTS\DS WBS No. R-000267-0179-4 LIFT STATION\02-LOCKWOOD SITE-TP.dwg

Tree No.	Location	Description	Chapter 33 Status	Comments	Treatment
Trees on South Point Lift station Site					
13	10385 Gulf Palms	10" Chinkapin Oak	Protected	Girdled by planting guy wire	Fence, Clearance prune
14	10385 Gulf Palms	5" Mulberry	Not protected	Private tree, Not impacted	
15	10385 Gulf Palms	11" Sugarberry	Not protected	Private tree	Clearance prune
16	10385 Gulf Palms	10" Sugarberry	Not protected	Private tree	Clearance prune
17	10385 Gulf Palms	8" Chinkapin Oak	Protected	Remove for drive, Girdled by planting guy wire	Remove tree, Provide 8" in replacement or mitigation
18	10385 Gulf Palms	2" Ligustrum	Not protected	Private tree, Not impacted	
19	10385 Gulf Palms	5" Lacebark Elm	Not protected	Private tree	Clearance prune
20	10385 Gulf Palms	5" Mulberry	Not protected	Private tree	Clearance prune

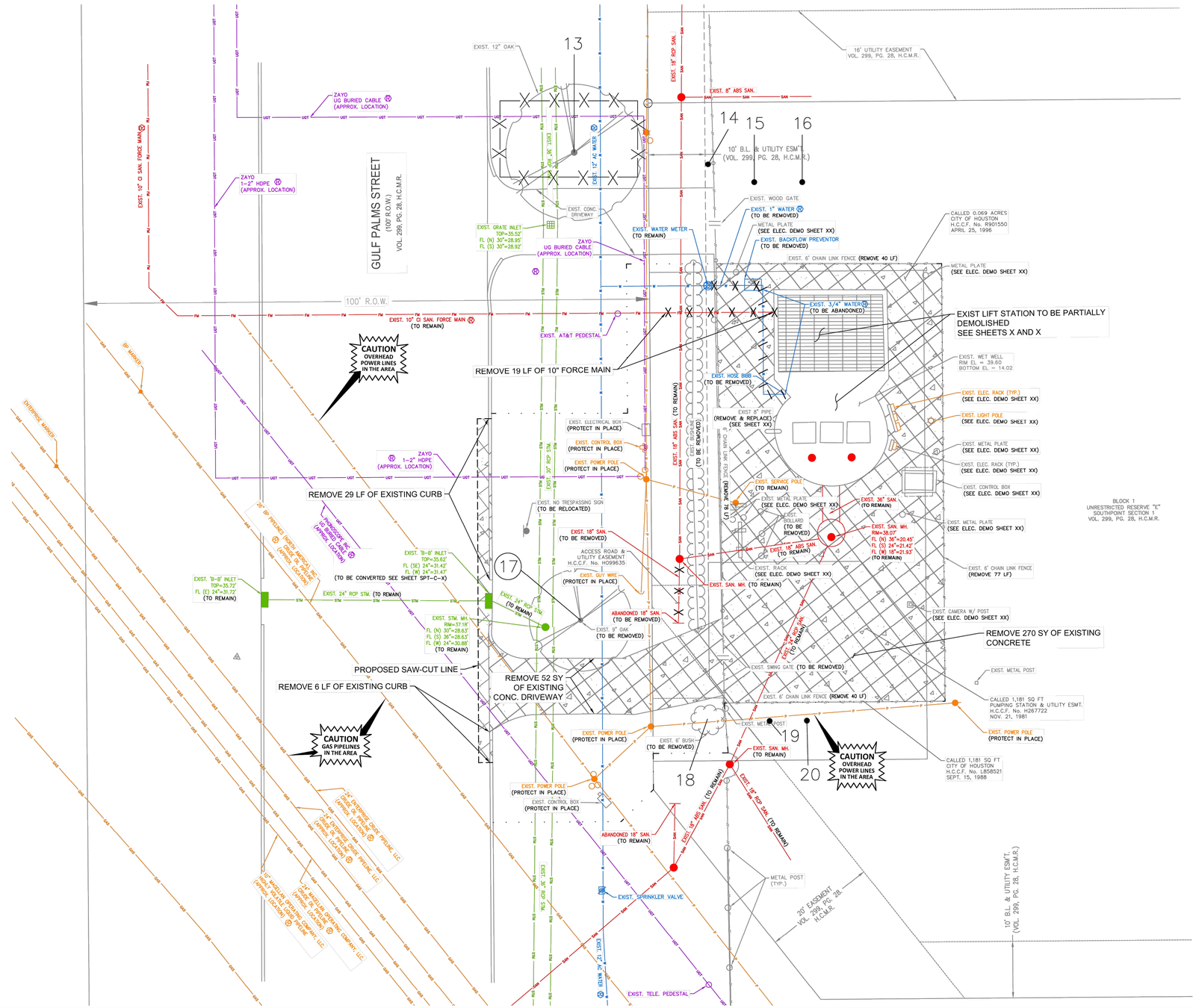

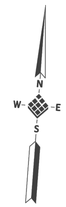

10' 0' 10'
SCALE
1" = 10'

NO.	DATE	REVISION	APP.

TREE PRESERVATION PLAN LEGEND

- 1 — TREE NUMBER/LOCATION
- (1) — TREE TO BE REMOVED
- —X— TREE PROTECTION FENCE

C.N. Koehl
Urban Forestry, Inc.
210 Stone Bush Ct. ◦ Katy, Texas 77493
281-391-0022 ckoehl@kochlurbanforestry.com

APPROVED:

IDS Engineering Group
13430 NW. Freeway
Suite 700
Houston, Tx. 77040
713.462.3178
TxEng Firm 2726
TxSurv Firm 10110700

CITY OF HOUSTON
HOUSTON PUBLIC WORKS

LIFT STATION RENEWAL AND REPLACEMENT FY 2023

TREE PROTECTION PLAN SHEET 3 OF 6

WBS NUMBER	FOR CITY OF HOUSTON USE ONLY
X-000X00-0000-X	
DRAWING SCALE	
HORIZ: 1"=40' VERT:	
CITY OF HOUSTON PM	
NAWARAJ PANTA, P.E.	
SHEET NO. 318 OF 321	

DWG. NO. TPP-03

PLOTTED: 12/9/2025 6:56 PM
FILE PATH: C:\Users\Ned\Desktop\UPCOMING PROJECTS\IDS WBS No. R-000267-0179-4 LIFT STATION\03-SOUTH PNT SITE-TP.dwg

Tree No.	Location	Description	Chapter 33 Status	Comments	Treatment
Trees on Scott #3 Lift station Site					
21	10718 1/2 Scott	15" Tallow	Not protected	Private tree, Not impacted	
22	10718 1/2 Scott	1" Boxwood	Not protected	Remove for sidewalk	Remove, No replacement required
23	10718 1/2 Scott	1" Boxwood	Not protected	Remove for sidewalk	Remove, No replacement required
24	10718 1/2 Scott	1" Boxwood	Not protected	Remove for sidewalk	Remove, No replacement required
25	10718 1/2 Scott	1" Boxwood	Not protected	Remove for sidewalk	Remove, No replacement required
26	Not available	16" Live Oak	Not protected	Private tree, Not impacted	
27	Not available	17" Live Oak	Not protected	Private tree, Not impacted	
28	Not available	17" Live Oak	Not protected	Private tree, Not impacted	
29	Not available	12" Live Oak	Not protected	Private tree, Not impacted	

TREE PRESERVATION PLAN LEGEND

1 — TREE NUMBER/LOCATION

(1) — TREE TO BE REMOVED

—X— TREE PROTECTION FENCE

N W E S

10' 0' 10'

SCALE

1" = 10'

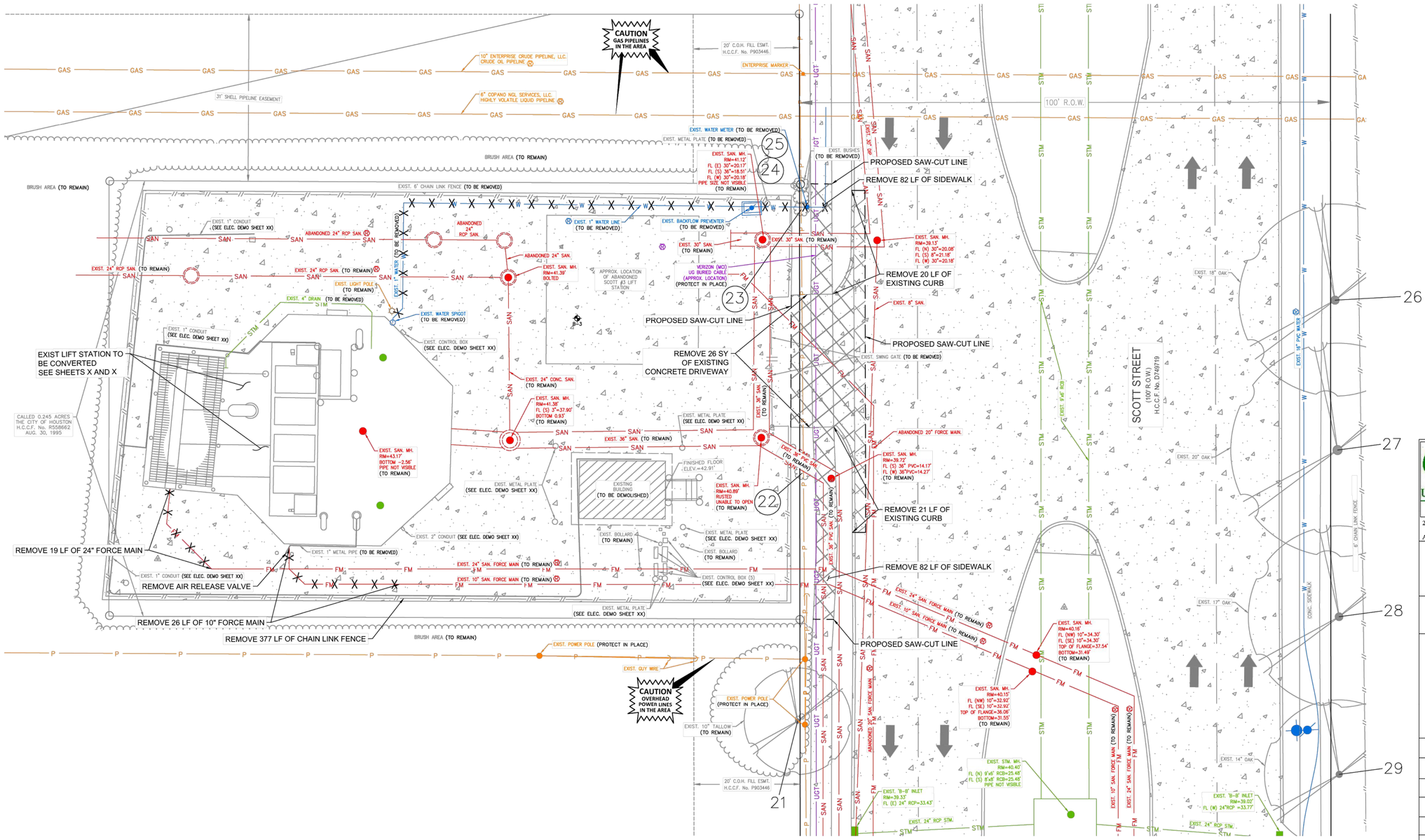

C.N. Koehl
Urban Forestry, Inc.
210 Stone Bush Ct. • Katy, Texas 77493
281-391-0022 ckoehl@koehlurbanforestry.com

APPROVED:

IDS Engineering Group
13430 NW. Freeway
Suite 700
Houston, Tx. 77040
713.462.3178
TxEng Firm 2726
TxSurv Firm 10110700

CITY OF HOUSTON

HOUSTON PUBLIC WORKS

LIFT STATION RENEWAL AND REPLACEMENT FY 2023

TREE PROTECTION PLAN SHEET 4 OF 6

WBS NUMBER	FOR CITY OF HOUSTON USE ONLY
X-000X00-0000-X	
DRAWING SCALE	
HORIZ: 1"=40' VERT:	
CITY OF HOUSTON PM	
NAWARAJ PANTA, P.E.	
SHEET NO. 319 OF 321	

NO.	DATE	REVISION	APP.

TPP-04

PLOTTED: 12/9/2025 6:56 PM
FILE PATH: C:\Users\Ned\Desktop\UPCOMING PROJECTS\IDS WBS No. R-000267-0179-4 LIFT STATION\04-SCOTT No 3 SITE-TP.dwg

PLOTTED: 12/9/2025 6:56 PM

FILE PATH: C:\Users\Ned\Desktop\UPCOMING PROJECTS\DS WBS No. R-000267-0179-4 LIFT STATION\05-WOODFOREST SITE-TP.dwg

Tree No.	Location	Description	Chapter 33 Status	Comments	Treatment
Trees on Woodforest Lift station Site					
30	12507 Woodforest	19" Sweetgum	Protected	Remove for detention/drainage	Remove tree, Provide 19" in replacement or mitigation
31	12507 Woodforest	3" Sweet Viburnum	Not protected	Remove for detention/drainage	Remove, No replacement required
32	12507 Woodforest	3" Sweet Viburnum	Not protected	Remove for detention/drainage	Remove, No replacement required
33	12507 Woodforest	3" Sweet Viburnum	Not protected	Remove for detention/drainage	Remove, No replacement required
34	12507 Woodforest	3" Sweet Viburnum	Not protected	Remove for detention/drainage	Remove, No replacement required
35	12507 Woodforest	8" Sweet Viburnum	Not protected	Remove for detention/drainage	Remove, No replacement required
36	12507 Woodforest	13" Lacebark Elm	Protected	Remove for storm	Remove tree, Provide 13" in replacement or mitigation
37	12507 Woodforest	11" Lacebark Elm	Protected	Remove for waterline & drive	Remove tree, Provide 11" in replacement or mitigation
38	12507 Woodforest	13" Lacebark Elm	Protected	Remove for waterline	Remove tree, Provide 13" in replacement or mitigation
39	12507 Woodforest	15" Lacebark Elm	Protected		Fence
40	12507 Woodforest	16" Lacebark Elm	Protected		Fence
41	12507 Woodforest	13" Water Oak	Protected		Fence
42	12507 Woodforest	12" Lacebark Elm	Protected		Fence

TREE PRESERVATION PLAN LEGEND

- 1 — TREE NUMBER/LOCATION
- (1) — TREE TO BE REMOVED
- —X— TREE PROTECTION FENCE

10' 0' 10'
SCALE
1"=10'

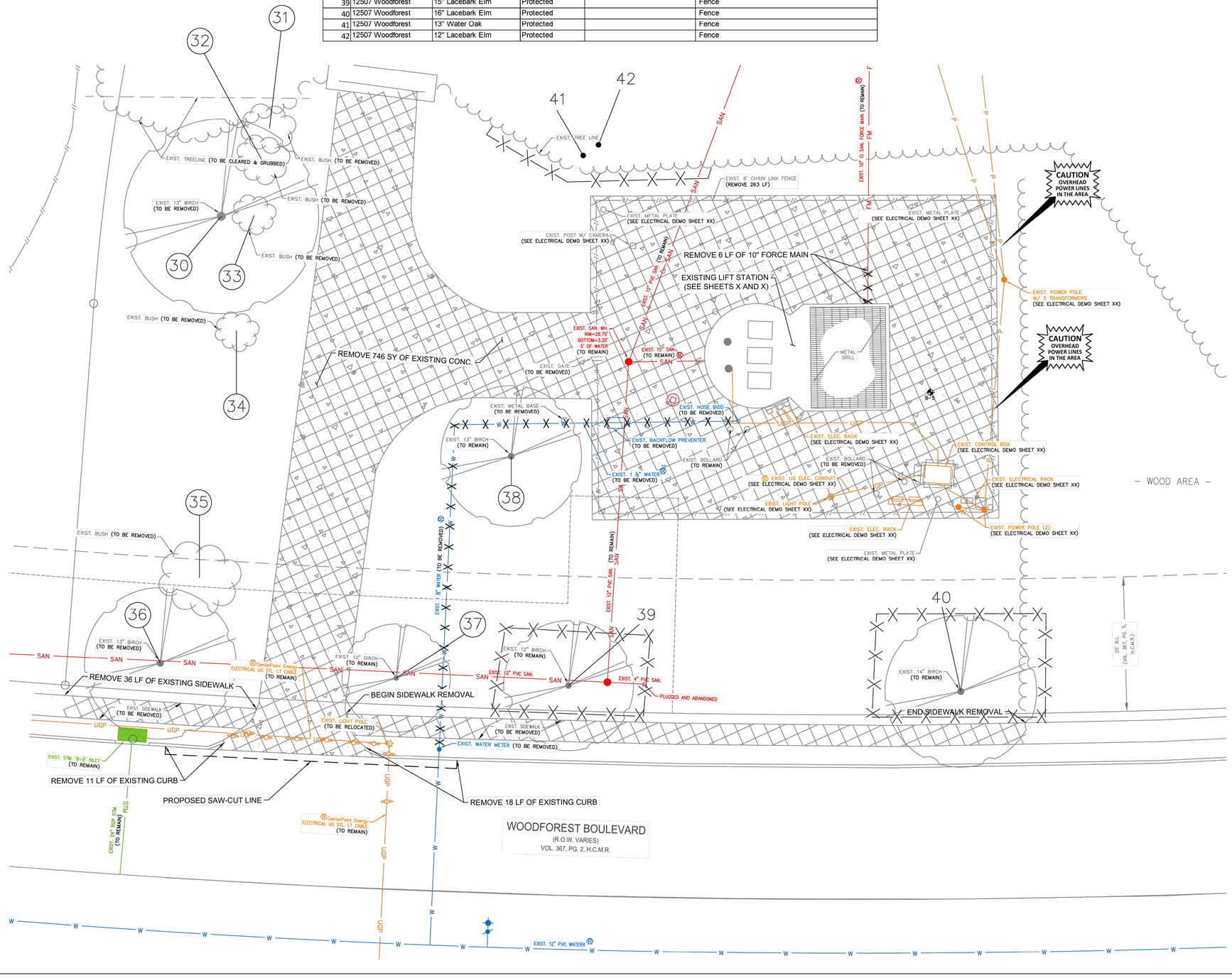

NO.	DATE	REVISION	APP.

C.N. Koehl
Urban Forestry, Inc.
210 Stone Bush Ct. ◦ Katy, Texas 77493
281-391-0022 ckoehl@koehlurbanforestry.com

APPROVED:

IDS Engineering Group
13430 NW. Freeway
Suite 700
Houston, Tx. 77040
713.462.3178
TxEng Firm 2726
TxSurv Firm 10110700

CITY OF HOUSTON
HOUSTON PUBLIC WORKS

LIFT STATION RENEWAL AND REPLACEMENT FY 2023

TREE PROTECTION PLAN SHEET 5 OF 6

WBS NUMBER	FOR CITY OF HOUSTON USE ONLY
X-000X00-0000-X	
DRAWING SCALE	
HORIZ: 1"=40' VERT:	
CITY OF HOUSTON PM	
NAWARAJ PANTA, P.E.	

DWG. NO.	SHEET NO. 320 OF 321
TPP-05	

PLOTTED: 12/9/2025 6:56 PM

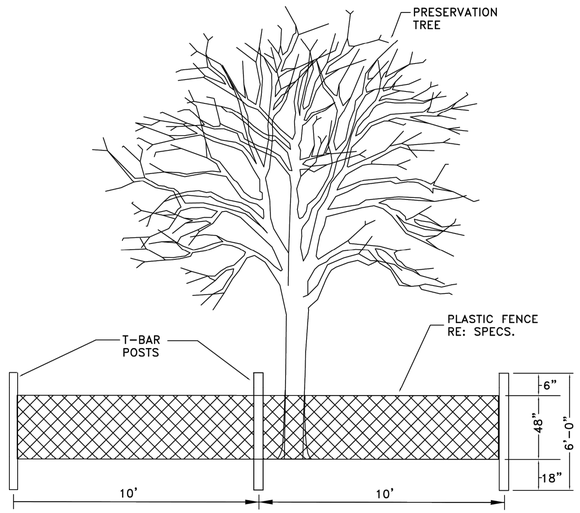

TREE PROTECTION FENCING DETAIL A

NOT TO SCALE

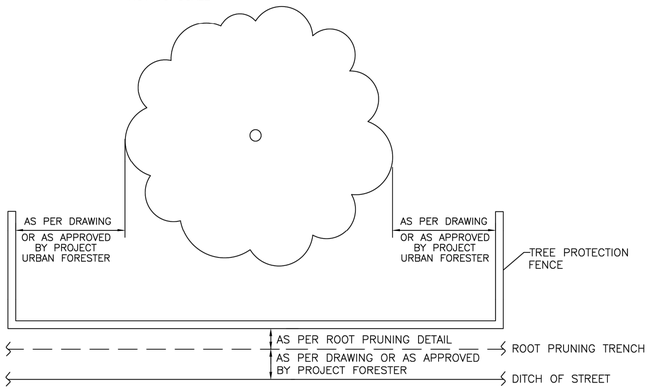

TREE PROTECTION FENCING DETAIL B

NOT TO SCALE

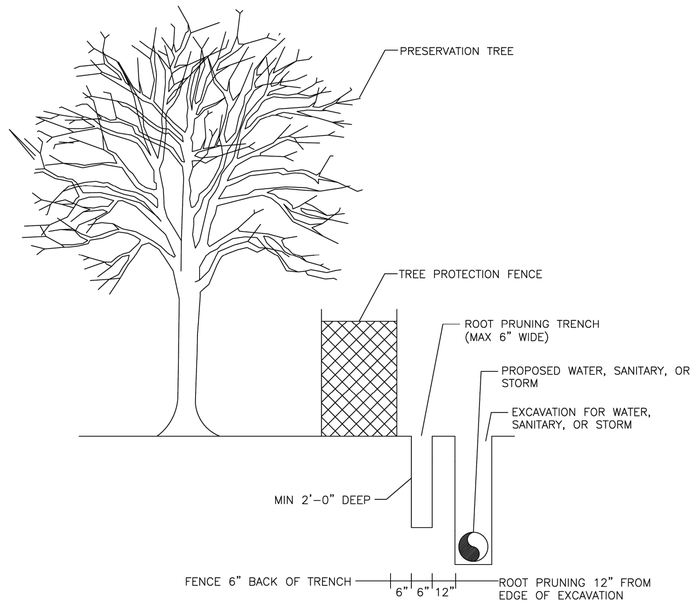

ROOT PRUNE FOR WATER, SANITARY, OR STORM LINE

NOT TO SCALE

Tree Removal List

Tree No.	Location	Description	Replacement requirement
3	Not available	15" Mulberry	0
4	Not available	10" Mulberry	0
5	Not available	5" Lacebark Elm	5
6	Not available	8" Lacebark Elm	8
7	Not available	6" Lacebark Elm	6
8	Not available	4" Sugarberry	0
9	Not available	8" Sugarberry	0
17	10385 Gulf Palms	8" Chinkapin Oak	8
30	12507 Woodforest	19" Sweetgum	19
31	12507 Woodforest	3" Sweet Viburnum	0
32	12507 Woodforest	3" Sweet Viburnum	0
33	12507 Woodforest	3" Sweet Viburnum	0
34	12507 Woodforest	3" Sweet Viburnum	0
35	12507 Woodforest	8" Sweet Viburnum	0
36	12507 Woodforest	13" Lacebark Elm	13
37	12507 Woodforest	11" Lacebark Elm	11
38	12507 Woodforest	13" Lacebark Elm	13
		TOTAL REPLACEMENT INCHES REQUIRED	**83**

Tree Replacement List

Quantity	Caliper Size	Species	Container/Tree Spade size
		TOTAL REPLACEMENT INCHES INCLUDED IN PLAN	**0**

NOTE: Tree replacement locations are not shown on plans. Contractor must coordinate with City of Houston Urban Forestry and Houston Public Works prior to PURCHASING trees. This project may not have adequate room for all required replacement trees without creating regulatory sign or traffic/pedestrian visibility issues. Number of trees and planting locations will be determined by City of Houston Urban Forestry in construction phase. Trees that are planted are to be maintained and watered for 2 years following planting per standard spec 02915. Timing of planting may be delayed in periods of drought with mandatory water restrictions in place-timing to be coordinated with City of Houston Urban Forestry. Trees in esplanade groupings to be planted in common bed with 4" of hardwood mulch between trees.

Trees are to be maintained and watered for 2 years following planting per standard spec 02915. Timing of planting may be delayed in periods of drought with mandatory water restrictions in place-timing to be coordinated with City of Houston Urban Forestry.

Tree replacement locations shall comply with Houston Public Works spec sections 02811, 02911, 02912, 02915, 02921 & 02922. In general trees along sides of street right of ways shall be no closer than 3' to back of curb or 20' from another tree. Trees in medians shall be no closer than 6' back of curb, 75' from an intersection, 50' to a median cut, or 20' from another tree. Contractor to coordinate locations with City Forestry and HPW prior to PURCHASING trees. All replacement trees called out on plans may not be planted on project relative to coordination with listed parties.

Cash Allowance Due Parks from HPW for Balance of Mitigation Not Planted on Project

	Required Mitigation total	Mitigation rate/inch	
0-5.99"	5	$ 289.47	$ 1,447.35
6-11.99"	33	496.64	$ 16,389.12
12" +	45	662.19	$ 29,798.55
		TOTAL REQUIRED MITIGATION FEE	**$ 47,635.02**

NO.	DATE	REVISION	APP.

C.N. Koehl
Urban Forestry, Inc.
210 Stone Bush Ct. ◦ Katy, Texas 77493
281-391-0022 ckoehl@koehlurbanforestry.com

APPROVED:

IDS Engineering Group
13430 NW. Freeway
Suite 700
Houston, Tx. 77040
713.462.3178
TxEng Firm 2726
TxSurv Firm 10110700

CITY OF HOUSTON
HOUSTON PUBLIC WORKS

LIFT STATION RENEWAL AND REPLACEMENT FY 2023

TREE PROTECTION PLAN
SHEET 6 OF 6

WBS NUMBER	FOR CITY OF HOUSTON USE ONLY
X-000X00-0000-X	
DRAWING SCALE	
HORIZ: N.T.S. VERT:	
CITY OF HOUSTON PM	
NAWARAJ PANTA, P.E.	
SHEET NO. 321 OF 321	

DWG. NO. TPP-06

FILE PATH: C:\Users\Ned\Desktop\UPCOMING PROJECTS\IDS WBS No. R-000267-0179-4 LIFT STATION\06-DETAILS.dwg