FLOODPLAIN MANAGEMENT OFFICE

APPROVED

ILMS # 26023603

Development Permit #: 26-1091

Date: 03/20/2026 **By:** Juan R. Diaz

CITY OF HOUSTON
HOUSTON PUBLIC WORKS
CAPITAL PROJECTS

APPLICABLE CODES
2021 INTERNATIONAL BUILDING CODE WITH CITY OF HOUSTON AMENDMENTS
2021 UNIFORM MECHANICAL CODE
2021 UNIFORM PLUMBING CODE
2023 NATIONAL ELECTRICAL CODE
2021 INTERNATIONAL FIRE CODE
2021 IECC OR 2021 ASHRAE 90.1 ENERGY CODE PURSUANT TO 19.53 OF SUB-CHP E, CHP. 19, TITLE 34, TEXAS ADMINISTRATIVE CODE

LIFT STATION REHABILITATION & RECONSTRUCTION
CONSENT DECREE - BRETSHIRE #1, CHERRY OAK, RED GULLY, ANNUNCIATION, EMNORA #2 & SHADOW LAKES

WBS NO. R-000267-0175-4

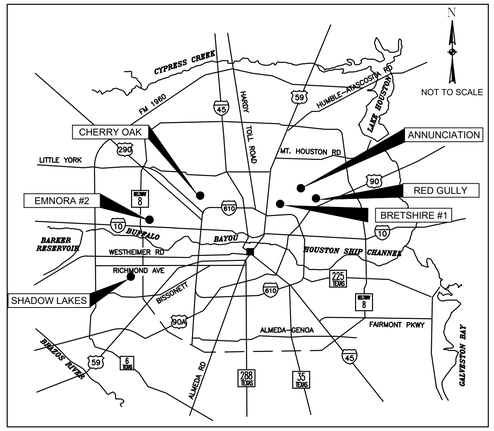

LOCATION MAP

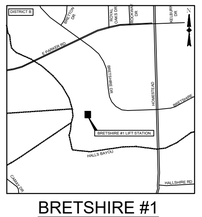

BRETSHIRE #1
6920 BRETSHIRE DR
KEY MAP NO. 454-D

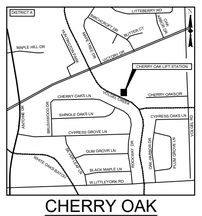

CHERRY OAK
4205 VICTORY DR
KEY MAP NO. 411-U

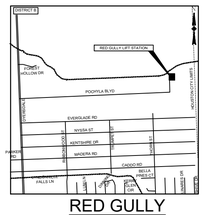

RED GULLY
9525 POCHYLA BLVD
KEY MAP NO. 415-Z

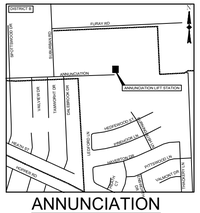

ANNUNCIATION
6920 ANNUNCIATION ST
KEY MAP NO. 415-P

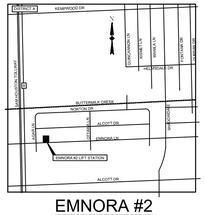

EMNORA #2
10662 EMNORA LN
KEY MAP NO. 449-Q

SHADOW LAKES
3225 SHADOWBRIAR DR
KEY MAP NO. 488-Z

TDLR EABPR _____

MAYOR
JOHN WHITMIRE

CONTROLLER
CHRIS HOLLINS

DISTRICT COUNCIL MEMBERS

AMY PECK, DISTRICT A
TARSHA JACKSON, DISTRICT B
ABBIE KAMIN, DISTRICT C
CAROLYN EVANS-SHABAZZ, DISTRICT D
FRED FLICKINGER, DISTRICT E
TIFFANY D. THOMAS, DISTRICT F
MARY NAN HUFFMAN, DISTRICT G
MARIO CASTILLO, DISTRICT H
JOAQUIN MARTINEZ, DISTRICT I
EDWARD POLLARD, DISTRICT J
MARTHA CASTEX-TATUM, DISTRICT K

COUNCIL MEMBERS AT-LARGE

JULIAN RAMIREZ, POSITION 1
WILLIE DAVIS, POSITION 2
TWILA CARTER, POSITION 3
LETITIA PLUMMER, POSITION 4
SALLIE ALCORN, POSITION 5

NO.	DATE	REVISION	APP.
0	03/27/26	MYLAR SUBMITTAL	

ARCADIS
Infrastructure · Water · Environment · Buildings
1330 Post Oak Blvd., Suite 2250, Houston, TX 77056
Tel: 713-953-4800
Fax: 713-977-4620
www.arcadis.com
Texas Registered Engineering Firm F-533

SURVEYED BY: AMANI ENGINEERING INC.

FB NO. P-6335

STATE OF TEXAS
DAVID F. RIDGWAY
105134
LICENSED
PROFESSIONAL ENGINEER
03/27/2026

PARKS-FORESTRY DEPT.

METRO

HOUSTON WATER

TRANSPORTATION & DRAINAGE OPERATIONS

CAPITAL PROJECTS

SURVEY

CITY ENGINEER DATE

DIRECTOR OF HOUSTON PUBLIC WORKS DATE

SHEET NO 1 OF 312 SHEETS

FOR CITY OF HOUSTON USE ONLY

1. PROPERTY DESCRIPTION

I. LOCATION INFORMATION

A. HARRIS COUNTY COMMISSIONER'S PRECINCT:
■ 1 ☐ 2 ■ 3 ■ 4

B. KEY MAP: 411U, 415Z & 454D

C. ADDRESS: 6920 BRETSHIRE DR, HOUSTON, TX 77016
4100 CHERRY OAK CIR, HOUSTON, TX 77088 / 9525 POCHYLA RD, HOUSTON, TX 77078

II. LEGAL DESCRIPTION

A. ACREAGE:

B. ■ SUBDIVISION: BRETSHIRE LIFT STATION
CHERRY OAKS LIFT STATION & RED GULLY LIFT STATION
■ SURVEY & ABSTRACT: WATSON P. MAYS, NO. 576
SAMUEL LEEPER NO. 522 & ELI NOLAND NO. 600

C. ADJACENT ROADS: BRETSHIRE DRIVE, VICTORY DRIVE & POCHYLA ROAD

III. PLATTING

A. SUBDIVISION PLAT
☐ PROPOSED PLAT / REPLAT
■ RECORDED PLAT / REPLAT

B. STREETS PROPOSED
☐ PUBLIC
☐ PRIVATE
☐ PUBLIC & PRIVATE
■ NONE

PLAT NAME:

IV. JURISDICTIONS

■ CITY OF HOUSTON
☐ ETJ, CITY OF HOUSTON
☐ ETJ, CITY OF
☐ NO ETJ
☐ UTILITY DISTRICT (NAME)

V. HCAD ACCOUNT NOS. (ALL)

044-002-000-0175 & 044-002-000-0178
097-060-000-0030
004-402-400-00672

2. SITE DETENTION DRAINAGE

I. PROPOSED DRAINAGE AREA

☐ NEW DEVELOPMENT AREA:
■ RE-DEVELOPMENT AREA (AMOUNT INCREASED IMPERVIOUS AREA):
☐ LOW IMPACT DEVELOPMENT (LID)
METHOD/DESCRIPTION

II. METHODOLOGY

HCFCD PCPM DETENTION METHOD USED:
☐ METHOD 1 (LESS THAN 20 ACRES)
☐ METHOD 2 (20 ACRES TO 640 ACRES)
☐ METHOD 3 (GREATER THAN 640 ACRES)
■ OTHER CITY OF HOUSTON INFRASTRUCTURE DESIGN MANUAL (LESS THAN 20 ACRES)

III. DETENTION VOLUME & OUTFALL

OUTFALL TO:
☐ .65, H.C.F.C.D. CHANNEL, (H.C.F.C.D. UNIT NO.)
■ .75, EXISTING STORM SEWER (OWNER & OPERATOR) CITY OF HOUSTON
☐ 1.00, ROADSIDE DITCH, (OWNER & ROAD NAME)
☐ OTHER (OWNER & OPERATOR)

IV. STORMWATER DETENTION BASIN INFORMATION

A. HCFCD PCPM SUMMARY TABLE SEE SHEET _____ OF THESE PLANS.

DETENTION BASIN SERVICE AREA		acres	
STORM EVENT	50% EXCEEDANCE (2-YEAR)	10% EXCEEDANCE (10-YEAR)	1% EXCEEDANCE (100-YEAR)
MAXIMUM ALLOWABLE OUTFLOW (PRE-DEVELOPMENT PEAK FLOW)			
MAXIMUM OUTFLOW PROVIDED (PEAK FLOW FROM BASIN)			
LOWEST NATURAL/FINISHED GROUND OR FINISHED FLOOR ELEVATION ESTIMATE			
DESIGN WATER SURFACE ELEVATION			
MINIMUM STORAGE REQUIRED (ac-ft)			
DETENTION STORAGE PROVIDED (ac-ft)			
STORAGE RATE PROVIDED (ac-ft/ac)			
OUTFLOW VELOCITY INTO CHANNEL (ft/sec)			
DRAIN TIME - 1% ONLY (hours)			
EMERGENCY OVERFLOW (TYPE, SIZE, ELEVATION, ETC.)			

B. DETENTION BASIN TO BE MAINTAINED BY CITY OF HOUSTON
C. DETENTION SERVICE AREA MAP ON SHEET _____
D. ADDITIONAL CRITERIA FOR PUMPED DETENTION BASINS
VOLUME OF PUMPED 1% EXCEEDANCE STORAGE VOLUME = _____ ACFT _____ % OF TOTAL VOLUME
MAXIMUM DESIGN OUTFLOW VELOCITY INTO HCFCD CHANNEL = _____ FT/SEC
DRAIN TIME FOR BASIN = _____ HOURS BASED ON _____HEAD CONDITIONS

V. DETENTION PROVIDED IN OTHER PLANS:

HCFCD PROJECT No. _____ DATE SIGNED BY HCFCD: _____
PLAN TITLE _____
DETENTION POND SERVICE AREA MAP IS PROVIDED ON SHEET _____
ENGINEERING FIRM _____
DETENTION BASIN MAINTAINED BY: _____

VI. FLOW RESTRICTOR SIZE

OUTFALL PIPE SIZE: _____
RESTRICTOR PIPE SIZE: _____
RESTRICTOR PLATE DIMENSION: _____

VII. DETENTION PROVIDED BY

☐ REGIONAL DETENTION BASIN SYSTEM (APPROVED H.C. PRJ NO.): _____

FOR PROJECTS LOCATED IN ANY FLOODPLAIN
Development constructed or placed in accordance with these plans will comply with all provisions of the designated Floodplain Administrator.
No net fill is allowed in the flood plain and no fill is allowed in the floodway.

OFFSITE SHEET FLOW: (100 YEAR)

OFFSITE SHEET FLOW MAPPING, TOTAL DISCHARGE CALCULATIONS, AND DESIGN ACCOMODATIONS ARE SHOWN ON SHEET ____ OR, AS PRESENTED IN THE APPROVED DRAINAGE STUDY ENTITLED _____.

TOTAL ACREAGE =____
TOTAL DISCHARGE =____

NOTE: ALL OFFSITE SHEET FLOW FROM ADJACENT PROPERTIES MUST BE IDENTIFIED AND PROPERLY ACCOUNTED FOR IN THE PROJECT. THE SIGNING ENGINEER HEREBY CERTIFIES THAT THESE AREAS HAVE BEEN ADDRESSED.

3. SWQ DISCHARGE INTO FCD FACILITY

I. SWPPP: CONSTRUCTION MEASURES. (Must complete)

☐ DISTURBS >1AC. SITE PLAN & DETAILS ON SHEET(S) _____
■ DISTURBS <1AC. N/A

*II. APPLICABILITY FOR PERMANENT FEATURES. (Must complete)

EXEMPT NEW DEVELOPMENT:
☐ PROJECT IS ON A PARCEL (A COMMON PLAN OF DEVELOPMENT) LESS THAN 5 ACRES. (Must be verified with plat)

EXEMPT REDEVELOPMENT:
■ PROJECT DOES NOT MEET THE DEFINITION OF SIGNIFICANT REDEVELOPMENT (Part A,Sec. 2.39 of Regulations of Harris County, Texas for Stormwater Quality Management)

EXEMPT GRANDFATHERED:
☐ PROJECT'S DRAINAGE TIES DIRECTLY INTO AN EXISTING DRAINAGE SYSTEM PRIOR TO OCTOBER 1, 2001.
(FOR VERIFICATION: PROVIDE ORIGINAL DRAINAGE AREA MAP INCLUDING CALCULATIONS)

GENERAL:
■ PROJECT'S SWQ REQUIREMENTS FALL WITHIN THE JURISDICTION OF: CITY OF HOUSTON
☐ STORMWATER QUALITY PERMIT REQUIREMENT IS COVERED BY AN EXISTING SWQMP WITHIN PROJECT TITLE:
HARRIS COUNTY PROJECT No _____ & SWQ PERMIT No.

STORMWATER QUALITY MANAGEMENT PLAN:
☐ SITE PLAN ON SHEET(S)

III. PERMANENT SWQ FEATURES. (COMPLETE IF NOT EXEMPT)

☐ VEGETATIVE CONTROLS USED: (FILTER STRIP, GRASSY SWALE, URBAN FORESTRY DETAILS AND CALCULATIONS APPEAR ON SHEET(S) _____
■ POND STRUCTURE USED (WET, DRY, WETLANDS) DETAILS AND CALCULATIONSAPPEAR ON SHEET(S) 37, 80 & 121
☐ HYDRODYNAMIC TYPE SEPARATOR MODEL: _____
☐ OTHER(S): _____

4. FLOOD PLAIN STATUS

I. GENERAL INFORMATION

FIRM PANEL(S) FOR PROPERTY: 48201C0685L, 48201C0655M & 48201C0705M
FIRM PANEL(S) DATE: _____
STATUS OF PROPERTY ON MAP
■ ENTIRELY LOCATED IN UNSHADED ZONE "X"
■ LOCATED PARTIALLY OR ENTIRELY IN ANY "A" ZONE OR SHADED ZONE "X", DELINEATE FLOODPLAIN BOUNDARY ON CONSTRUCTION DRAWINGS
(DRAINAGE LAYOUT PG. NO._____) (1% BASE FLOOD LEVEL_____)
(0.2% BASE FLOOD LEVEL_____)
☐ SITE REMOVED FROM FLOODPLAIN BY LOMR, LOMR-F, LOMA
CASE NO._____ REVISED FLOODPLAIN IS SHOWN ON SHEET____

ELEVATION INFORMATION
BENCHMARK USED
☐ HARRIS COUNTY FLOODPLAIN REFERENCE MARK
☐ HARRIS-GALVESTON COASTAL SUBSIDENCE DISTRICT
■ BENCHMARK (FOR COASTAL AREAS)
DESCRIPTION OF BENCHMARK INCLUDING ELEVATION, DATUM AND YEAR OF ADJUSTMENT ***(2001 ADJ.)*** _____

~~II. FLOOD PLAIN DETERMINATION BASED ON GROUND ELEVATION~~
☐ PROPERTY LIES ENTIRELY ABOVE THE BASE FLOOD LEVEL AND IN SHADED ZONE "X"
☐ PROPERTY LIES PARTIALLY OR ENTIRELY BELOW THE BASE FLOOD LEVEL

III. FLOODPLAIN STORAGE SUMMARY
(APPLIES ONLY TO PORTION OF LAND LOCATED WITHIN FEMA REGULATORY FLOODPLAIN).
A. TOTAL VOLUME OF MATERIAL PROPOSED TO BE MOVED OR PLACED WITHIN THE FIRM DELINEATED FLOODPLAIN (FILL, BASE, CONCRETE, ASPHALT, ETC.):
BELOW 0.2% BASE FLOOD ELEVATION (2001 ADJ.) ____ CUBIC YARDS _____
B. TOTAL VOLUME OF MATERIAL PROPOSED TO BE REMOVED FROM THE FIRM DELINEATED FLOODPLAIN:
BELOW 0.2% BASE FLOOD ELEVATION (2001 ADJ.) ____ CUBIC YARDS _____
INCLUDING CALCULATIONS)
C. FILL AREA & VOLUME CALCULATIONS ARE SHOWN ON SHEET _____

5. WORK IN HCFCD RIGHT-OF-WAY

I. TYPE OF WORK TO BE PERFORMED IN HCFCD HCFCD ROW

A. BOND/NOTIFICATION INFORMATION
■ HCFCD WATERSHED HALLS BAYOU, WHITE OAK BAYOU & GREENS BAYOU
■ HCFCD UNIT No. P-118-00-00, E121-00-00 & P125-00-00
■ NUMBER OF OUTFALLS THREE
☐ UTILITY CROSSING
☐ ROADWAY BRIDGE/CULVERT CROSSING
☐ FILL ACTIVITY
☐ REHABILITATION OF CHANNEL
☐ MAINTENANCE
☐ TEMPORARY CROSSING
☐ TRAIL (LENGTH) _____
☐ OTHER _____
COST OF WORK IN HCFCD ROW NO WORK WILL BE PERFORMED IN HCFCD ROW

II. USACE ENVIRONMENTAL PERMIT

☐ US ARMY CORPS OF ENGINEERS NATIONWIDE PERMIT NUMBER(S) _____
☐ US ARMY CORPS OF ENGINEERS INDIVIDUAL PERMITS
☐ OTHER
■ NO PERMITS REQUIRED
EXPLAIN:
NO FILL MATERIAL WILL DISCHARGE INTO ANY OF THE U.S. WATERS. STORMWATER WILL DISCHARGE THROUGH AN EXISTING OUTFALL PIPE. NO CHANNEL WORK, PIPE MODIFICATION OR FILL PLACEMENT INVOLVED IN PROPOSED PROJECTS.

III. REFERENCE / BASIS OF DETERMINATION

■ ENVIRONMENTAL CONSULTANT REPORT
BY GEOTEST ENGINEERING, INC
REPORT TITLE ENVIRONMENTAL SITE ASSESSMENT REPORT
REPORT DATE OCTOBER 29, 2024
☐ OTHER _____

NOTES:
I. – III. REQUIRED ON PROJECTS WITH WORK IN A HCFCD CHANNEL. PLEASE REFERENCE SECTION 17 OF THE FLOOD CONTROL DISTRICT POLICY, CRITERIA, AND PROCEDURE MANUAL FOR MORE INFORMATION.

IV. HCFCD STANDARD NOTES: SEE SHEET 5 OF THESE PLANS.

V. HCFCD STANDARD DETAILS: SEE SHEET N/A OF THESE PLANS.

VI. HCFCD ACCESS PLAN: SEE SHEET N/A OF THESE PLANS.

VII. REFER TO THE FOLLOWING PLAN SHEETS: _____
FOR EXISTING AND PROPOSED RIGHT(S) OF WAY INCLUDING DELINEATION AND RECORDING INFORMATION PER HCFCD POLICY, CRITERIA, & PROCEDURE MANUAL (i.e., DRAINAGE EASEMENT, FEE STRIP, ETC.) AND GRANTEE (e.g. COH, HCFCD, PUBLIC, TXDOT, ETC.)

6. REPORTS/AGREEMENTS

I. HCFCD ACCEPTED REPORTS (ALL)

STORMWATER DRAINAGE DESIGN REPORT
REPORT TITLE _____
HCFCD PROJECT #_____
ENGINEERING FIRM _____
REPORT ACCEPTANCE DATE _____

GEOTECHNICAL INVESTIGATION REPORT
REPORT TITLE GEOTECHNICAL INVESTIGATION _____
HCFCD PROJECT #_____
ENGINEERING FIRM GEOTEST ENGINEERING, INC
REPORT ACCEPTANCE DATE _____

HCFCD APPROVED VARIANCE
DESCRIPTION OF VARIANCE _____
DOCUMENT ID #_____
VARIANCE ACCEPTANCE DATE _____

~~II. AGREEMENT TYPE & No.:~~
☐ INTERLOCAL (ILA): _____
☐ HCFCD MAINTENANCE _____
☐ TURF ESTABLISHMENT _____
☐ OTHER _____

HCFCD SIGNATURE BLOCK

PROJECT NAME: LIFT STATION REHABILITATION & RECONSTRUCTION CONSENT DECREE

ADDRESS:BRETSHIRE #1,CHERRY OAK, RED GULLY, ANNUNCIATION, EMNORA #2 & SHADOW LAKES

WAS ACCEPTED BY HARRIS COUNTY FLOOD CONTROL DISTRICT FOR THE PURPOSES LISTED BY:

HARRIS COUNTY FLOOD CONTROL DISTRICT

BY _____ : NO OBJECTION 2025.12.15 10:40:56-06'00' PMM
FOR ITEMS LOCATED OUTSIDE OF HCFCD RIGHT-OF-WAY

APPROVED:
BY _____
FOR ITEMS LOCATED WITHIN EXISTING HCFCD RIGHT-OF-WAY

APPROVED:
BY _____
FOR ITEMS LOCATED WITHIN PROPOSED HCFCD RIGHT-OF-WAY

NO REVIEW REQUIRED:
BY _____
FINAL PERMITTING BY OTHERS

ADDITIONAL COMMENTS:

THE PROJECT WAS REVIEWED, HOWEVER, THIS DOES NOT MEAN THE ENTIRE PROJECT, INCLUDING ALL SUPPORTING DATA AND CALCULATIONS HAVE BEEN COMPLETELY CHECKED AND VERIFIED. THESE DRAWINGS ARE SIGNED, DATED AND SEALED BY A PROFESSIONAL ENGINEER LICENSED TO PRACTICE IN THE STATE OF TEXAS, WHICH THEREFORE CONVEYS THE ENGINEER'S RESPONSIBILITY AND ACCOUNTABILITY. THIS DOES NOT RELIEVE ANY PARTY FROM COMPLYING WITH APPROPRIATE FEDERAL, STATE AND LOCAL ENVIRONMENTAL RULES, LAWS, AND REGULATIONS AND ANY OTHER LEGALLY ADOPTED REGULATION OR ORDINANCE RELATED TO LAND DEVELOPMENT. IF THE CITY SIGNATURES ARE REQUIRED BY ORDINANCE, COUNTY PERMITS WILL NOT BE ISSUED UNTIL SUCH SIGNATURES ARE OBTAINED. PLAN APPROVAL EXPIRATION TO BE IN ACCORDANCE WITH LOCAL GOVERNEMENT CODE CH. 245.

ENGINEER'S CERTIFICATION

I, DAVID RIDGWAY , A LICENSED PROFESSIONAL ENGINEER IN THE STATE OF TEXAS, DO HEREBY CERTIFY THAT THE INFORMATION PRESENTED ON THIS SHEET IS TRUE AND CORRECT TO THE BEST OF MY KNOWLEDGE AND THAT I AM NOT VIOLATING ANY PROVISION OF THE CURRENT TEXAS ENGINEERING PRACTICE ACT AND RULES CONCERNING THE PRACTICE OF ENGINEERING AND PROFESSIONAL ENGINEERING LICENSURE.

ANY VIOLATIONS WILL BE FORWARDED TO THE HARRIS COUNTY DISTRICT ATTORNEY'S OFFICE FOR PROSECUTION.

THE COMPLETED PROJECT CONSISTS OF DRAWING SHEETS 1 THRU 312 .

SIGNATURE _____ DATE 11/21/2025

SEAL: STATE OF TEXAS · DAVID F. RIDGWAY · 105134 · LICENSED PROFESSIONAL ENGINEER · 11/21/2025

REVISIONS

NOTE: REVISION BLOCK IS TO BE USED ONLY FOR CHANGES MADE AFTER PLANS HAVE BEEN APPROVED BY HARRIS COUNTY FLOOD CONTROL.

DATE	SHEET NO.	DESCRIPTION	P.E. INITIAL	H.C.F.C.D APPROVED DATE

HARRIS COUNTY FLOOD CONTROL DISTRICT REVIEW SHEET

VERSION 1.0 OCTOBER 2019

SHEET NO.	DWG NO.	SHEET TITLE
		GENERAL
1	G-1	COVER SHEET
2	G-2	HCFCD REVIEW SHEET
3	G-3	SHEET INDEX
4	G-4	GENERAL NOTES – I
5	G-5	GENERAL NOTES – II
6	G-6	LEGEND & ABBREVIATIONS – I
7	G-7	LEGEND & ABBREVIATIONS – II
8	G-8	STRUCTURAL NOTES
9	G-9	ELECTRICAL GENERAL NOTES
10	G-10	ELECTRICAL LEGENDS & SYMBOLS – I
11	G-11	ELECTRICAL LEGENDS & SYMBOLS – II
12	G-12	INSTRUMENTATION LEGENDS & SYMBOLS – I
13	G-13	INSTRUMENTATION LEGENDS & SYMBOLS – II
14	G-14	FLOODPLAIN MAPS – I
15	G-15	FLOODPLAIN MAPS – II
16	G-16	SURVEY CONTROL MAP – BRETSHIRE #1
17	G-17	SURVEY CONTROL MAP – CHERRY OAK – I
18	G-18	SURVEY CONTROL MAP – CHERRY OAK – II
19	G-19	SURVEY CONTROL MAP – RED GULLY – I
20	G-20	SURVEY CONTROL MAP – RED GULLY – II
21	G-21	SURVEY CONTROL MAP – ANNUNCIATION
22	G-22	SURVEY CONTROL MAP – EMNORA #2 LANE – I
23	G-23	SURVEY CONTROL MAP – EMNORA #2 LANE – II
24	G-24	SURVEY CONTROL MAP – SHADOW LAKES – I
25	G-25	SURVEY CONTROL MAP – SHADOW LAKES – II
		BRETSHIRE #1 LIFT STATION
26	C-1	EXISTING SITE PLAN
27	C-2	SITE DEMOLITION PLAN
28	C-3	WET WEATHER WET WELL – DEMOLITION PLAN
29	C-4	WET WEATHER WET WELL – DEMOLITION SECTION
30	C-5	DIVERSION STRUCTURE – DEMOLITION PLANS
31	C-6	DIVERSION STRUCTURE – DEMOLITION SECTIONS
32	C-7	DRY WEATHER WET WELL – DEMOLITION PLAN
33	C-8	DRY WEATHER WET WELL – DEMOLITION SECTION
34	C-9	SITE PLAN
35	C-10	YARD PIPING PROFILE
36	C-10-A	YARD PIPING PROFILE
37	C-11	CONCRETE PAVEMENT & DRAINAGE PLAN
38	M-1	WET WELL – PLAN
39	M-2	WET WELL – SECTION
40	M-3	WET WELL – PUMP CURVE DATA
41	S-1	WET WEATHER WET WELL – DEMOLITION PLAN
42	S-2	WET WEATHER WET WELL – DEMOLITION SECTION
43	S-3	DRY WEATHER WET WELL – DEMOLITION PLAN
44	S-4	DRY WEATHER WET WELL – DEMOLITION SECTION
45	S-5	WET WELL – PLAN
46	S-6	WET WELL – REINFORCEMENT PLAN
47	S-7	WET WELL – SECTION
48	S-8	WET WELL – FINISHED SECTION
49	E-1	ELECTRICAL DEMOLITION SITE PLAN
50	E-2	ELECTRICAL PROPOSED SITE PLAN
51	E-3	SINGLE-LINE DIAGRAM
52	E-4	MCC ELEVATION & DEVICE RATING SCHEDULE
53	E-5	ELECTRICAL ENLARGED PLAN
54	E-6	ELECTRICAL BUILDING PLAN
55	E-7	ELECTRICAL CONDUIT SCHEDULE
56	E-8	MCC SCHEMATIC & WIRING DIAGRAM
57	E-9	SERVICE POLE DETAIL
58	E-10	MCC INCOMING POWER SCHEMATIC&COMMUNICATION WIRING DIAGRAM
59	E-11	TYPICAL JUNCTION BOX DETAILS
60	E-12	SERVICE RACK DETAILS
61	I-1	PROCESS & INSTRUMENTATION DIAGRAM – I
62	I-2	PROCESS & INSTRUMENTATION DIAGRAM – II
63	I-3	CONTROL CABINET EQUIPMENT LAYOUT & SCHEDULE
64	I-4	CONTROL CABINET BACK DOOR ELEVATION
65	I-5	CONTROL CABINET EQUIPMENT LAYOUT
66	I-6	CONTROL WIRING DIAGRAM – I
67	I-7	CONTROL WIRING DIAGRAM – II
68	I-8	CONTROL WIRING DIAGRAM – III
69	I-9	CONTROL WIRING DIAGRAM PUMP –101
70	I-10	CONTROL WIRING DIAGRAM PUMP –102
71	I-11	CONTROL WIRING DIAGRAM PUMP –103
72	I-12	CONTROL WIRING DIAGRAM PUMP –104
		CHERRY OAK LIFT STATION
73	C-12	EXISTING SITE PLAN
74	C-13	SITE DEMOLITION PLAN
75	C-14	WET WELL – DEMOLITION PLAN
76	C-15	WET WELL – DEMOLITION SECTIONS
77	C-16	SITE PLAN
78	C-17	YARD PIPING PROFILE – I
79	C-18	YARD PIPING PROFILE – II
80	C-19	CONCRETE PAVEMENT & DRAINAGE PLAN
81	C-20	ACCESS DRIVEWAY PLAN & PROFILE
82	M-4	WET WELL – PLAN
83	M-5	WET WELL – SECTION
84	M-6	WET WELL – PUMP CURVE DATA
85	S-9	WET WELL – DEMOLITION PLAN
86	S-10	WET WELL – DEMOLITION SECTION
87	S-11	WET WELL – PLAN
88	S-12	WET WELL – REINFORCEMENT PLAN
89	S-13	WET WELL– SECTION – I
90	S-14	WET WELL – SECTION – II
91	E-13	ELECTRICAL DEMOLITION SITE PLAN
92	E-14	ELECTRICAL PROPOSED SITE PLAN
93	E-15	SINGLE-LINE DIAGRAM
94	E-16	MCC ELEVATION & DEVICE RATING SCHEDULE
95	E-17	BUILDING PLAN

SHEET NO.	DWG NO.	SHEET TITLE
96	E-18	ELECTRICAL ENLARGED PLAN
97	E-19	CONDUIT SCHEDULE
98	E-20	MCC POWER SCHEMATIC & WIRING DIAGRAM
99	E-21	SERVICE POLE DETAILS & GENERATOR DETAILS
100	E-22	MCC INCOMING POWER SCHEMATIC&COMMUNICATION WIRING DIAGRAM
101	E-23	TYPICAL JUNCTION BOX DETAILS
102	E-24	SERVICE RACK DETAIL
103	I-13	PROCESS & INSTRUMENTATION DIAGRAM – I
104	I-14	PROCESS & INSTRUMENTATION DIAGRAM – II
105	I-15	CONTROL CABINET EQUIPMENT LAYOUT & SCHEDULE
106	I-16	CONTROL CABINET BACK DOOR ELEVATION
107	I-17	CONTROL CABINET EQUIPMENT LAYOUT
108	I-18	CONTROL WIRING DIAGRAM – I
109	I-19	CONTROL WIRING DIAGRAM – II
110	I-20	CONTROL WIRING DIAGRAM – III
111	I-21	CONTROL WIRING DIAGRAM PUMP – 101
112	I-22	CONTROL WIRING DIAGRAM PUMP – 102
113	I-23	CONTROL WIRING DIAGRAM PUMP – 103
114	I-24	CONTROL WIRING DIAGRAM PUMP – 104
115	I-25	CONTROL WIRING DIAGRAM PUMP – 105
		RED GULLY LIFT STATION
116	C-21	EXISTING SITE PLAN
117	C-22	SITE DEMOLITION PLAN
118	C-23	WET WELL – DEMOLITION PLAN & SECTION
119	C-24	SITE PLAN
120	C-25	YARD PIPING PROFILE
121	C-26	CONCRETE PAVEMENT & DRAINAGE PLAN
122	C-27	ACCESS DRIVEWAY PLAN & PROFILE – I
123	C-27-A	ACCESS DRIVEWAY PLAN & PROFILE – II
124	M-7	WET WELL – PLAN
125	M-8	WET WELL – SECTION
126	M-9	WET WELL – PUMP CURVE DATA
127	S-15	WET WELL – PLAN
128	S-16	WET WELL – REINFORCEMENT PLAN
129	S-17	WET WELL – SECTION
130	E-25	ELECTRICAL DEMOLITION SITE PLAN
131	E-26	ELECTRICAL PROPOSED SITE PLAN
132	E-27	SINGLE-LINE DIAGRAM
133	E-28	MCC ELEVATION & DEVICE RATING SCHEDULE
134	E-29	ELECTRICAL ENLARGED PLAN
135	E-30	ELECTRICAL BUILDING PLAN
136	E-31	ELECTRICAL CONDUIT SCHEDULE
137	E-32	MCC SCHEMATIC & WIRING DIAGRAM
138	E-33	SERVICE POLE DETAIL
139	E-34	MCC INCOMING POWER SCHEMATIC&COMMUNICATION WIRING DIAGRAM
140	E-35	TYPICAL JUNCTION BOX DETAILS
141	E-36	SERVICE RACK DETAILS
142	I-26	PROCESS & INSTRUMENTATION DIAGRAM – I
143	I-27	PROCESS & INSTRUMENTATION DIAGRAM – II
144	I-28	CONTROL CABINET EQUIPMENT LAYOUT & SCHEDULE
145	I-29	CONTROL CABINET BACK DOOR ELEVATION
146	I-30	CONTROL CABINET EQUIPMENT LAYOUT
147	I-31	CONTROL WIRING DIAGRAM – I
148	I-32	CONTROL WIRING DIAGRAM – II
149	I-33	CONTROL WIRING DIAGRAM – III
150	I-34	CONTROL WIRING DIAGRAM PUMP –101
151	I-35	CONTROL WIRING DIAGRAM PUMP –102
152	I-36	CONTROL WIRING DIAGRAM PUMP –103
153	I-37	CONTROL WIRING DIAGRAM PUMP –104
		ANNUNCIATION LIFT STATION
154	C-28	EXISTING SITE PLAN
155	C-29	SITE DEMOLITION PLAN
156	C-30	DEMOLITION PLAN AT GRADE
157	C-31	DEMOLITION PIPING PLAN
158	C-32	SITE PLAN
159	C-33	CONCRETE PAVEMENT & DRAINAGE PLAN
160	C-34	SITE DETENTION PLAN
161	C-35	YARD PIPING PROFILE
162	M-10	WET WELL – PLAN
163	M-11	WET WELL – PIPING PLAN
164	M-12	WET WELL – SECTIONS
165	M-13	WET WELL – PUMP CURVE DATA
166	S-18	WET WELL – DEMOLITION PLAN
167	S-19	WET WELL – DEMOLITION SECTION
168	S-20	WET WELL – PLAN
169	S-21	WET WELL – REINFORCEMENT PLAN
170	S-22	WET WELL – SECTION
171	E-37	ELECTRICAL DEMOLITION SITE PLAN
172	E-38	ELECTRICAL PROPOSED SITE PLAN
173	E-39	SINGLE-LINE DIAGRAM
174	E-40	MCC ELEVATION & DEVICE RATING SCHEDULE
175	E-41	ELECTRICAL BUILDING PLAN
176	E-42	ELECTRICAL ENLARGED PLAN
177	E-43	ELECTRICAL CONDUIT SCHEDULE
178	E-44	MCC SCHEMATIC & WIRING DIAGRAM
179	E-45	SERVICE POLE DETAIL
180	E-46	MCC INCOMING POWER SCHEMATIC&COMMUNICATION WIRING DIAGRAM
181	E-47	TYPICAL JUNCTION BOX DETAILS
182	E-48	SERVICE RACK DETAILS
183	I-38	PROCESS & INSTRUMENTATION DIAGRAM – I
184	I-39	PROCESS & INSTRUMENTATION DIAGRAM – II
185	I-40	CONTROL CABINET EQUIPMENT LAYOUT & SCHEDULE
186	I-41	CONTROL CABINET BACK DOOR ELEVATION
187	I-42	CONTROL CABINET EQUIPMENT LAYOUT
188	I-43	CONTROL WIRING DIAGRAM – I
189	I-44	CONTROL WIRING DIAGRAM – II
190	I-45	CONTROL WIRING DIAGRAM – III

SHEET NO.	DWG NO.	SHEET TITLE
191	I-46	CONTROL WIRING DIAGRAM PUMP –101
192	I-47	CONTROL WIRING DIAGRAM PUMP –102
193	I-48	CONTROL WIRING DIAGRAM PUMP –103
		EMNORA # 2 LIFT STATION
194	C-36	EXISTING SITE PLAN
195	C-37	SITE DEMOLITION PLAN
196	C-38	WET WELL – DEMOLITION PLAN AT GRADE
197	C-39	WET WELL – DEMOLITION PIPING PLAN
198	C-40	SITE PLAN
199	C-41	CONCRETE PAVEMENT & DRAINAGE PLAN
200	C-42	SITE DETENTION PLAN
201	C-43	YARD PIPING PROFILE
202	M-14	WET WELL – PLAN
203	M-15	WET WELL – PIPING PLAN
204	M-16	WET WELL – SECTION
205	M-17	WET WELL – PUMP CURVE DATA
206	S-23	WET WELL – DEMOLITION PLAN
207	S-24	WET WELL – DEMOLITION SECTION – I
208	S-25	WET WELL – DEMOLITION SECTION – II
209	S-26	WET WELL – PLANS
210	S-27	WET WELL – INTERMEDIATE PLAN
211	S-28	WET WELL – SECTION & DETAILS
212	E-49	ELECTRICAL DEMOLITION SITE PLAN
213	E-50	ELECTRICAL PROPOSED SITE PLAN
214	E-51	SINGLE-LINE DIAGRAM
215	E-52	MCC ELEVATION & DEVICE RATING SCHEDULE
216	E-53	ELECTRICAL ENLARGED PLAN
217	E-54	ELECTRICAL BUILDING PLAN
218	E-55	ELECTRICAL CONDUIT SCHEDULE
219	E-56	MCC SCHEMATIC & WIRING DIAGRAM
220	E-57	SERVICE POLE DETAILS
221	E-58	MCC INCOMING POWER SCHEMATIC&COMMUNICATION WIRING DIAGRAM
222	E-59	TYPICAL JUNCTION BOX DETAILS
223	E-60	SERVICE RACK DETAILS
224	I-49	PROCESS & INSTRUMENTATION DIAGRAM – I
225	I-50	PROCESS & INSTRUMENTATION DIAGRAM – II
226	I-51	CONTROL CABINET EQUIPMENT LAYOUT & SCHEDULE
227	I-52	CONTROL CABINET BACK DOOR ELEVATION
228	I-53	CONTROL CABINET EQUIPMENT LAYOUT
229	I-54	CONTROL WIRING DIAGRAM – I
230	I-55	CONTROL WIRING DIAGRAM – II
231	I-56	CONTROL WIRING DIAGRAM – III
232	I-57	CONTROL WIRING DIAGRAM PUMP –101
233	I-58	CONTROL WIRING DIAGRAM PUMP –102
234	I-59	CONTROL WIRING DIAGRAM PUMP –103
		SHADOW LAKES LIFT STATION
235	C-44	SITE DEMOLITION PLAN
236	C-45	WET WELL – DEMOLITION PLAN AT GRADE
237	C-46	SITE PLAN
238	C-47	SHADOWBRIAR ROAD PLAN STA 2+00 TO 7+00
239	C-48	SHADOWBRIAR ROAD PROFILE STA 2+00 TO 7+00
240	C-49	SHADOWBRIAR ROAD PLAN STA 7+00 TO 11+00
241	C-50	SHADOWBRIAR ROAD PROFILE STA 7+00 TO 11+00
242	C-51	SHADOWBRIAR ROAD PLAN STA 11+00 TO 16+00
243	C-52	SHADOWBRIAR ROAD PROFILE STA 11+00 TO 16+00
244	C-53	SHADOWBRIAR ROAD PLAN STA 16+00 TO 17+27.70
245	C-54	SHADOWBRIAR ROAD PROFILE STA 16+00 TO 17+27.70
		DETAILS
246	D-1	INDEX OF STANDARD DETAILS
247	D-2	CONSTRUCTION SIGN BUILD HOUSTON FORWARD
248	D-3	SITE – STANDARD DETAILS – I
249	D-4	SITE – STANDARD DETAILS – II
250	D-5	SITE – STANDARD DETAILS – III
251	D-6	SITE – STANDARD DETAILS – IV
252	D-7	SANITARY SEWER – STANDARD DETAILS – I
253	D-8	SANITARY SEWER – STANDARD DETAILS – II
254	D-9	SANITARY SEWER – STANDARD DETAILS – III
255	D-10	SANITARY SEWER – STANDARD DETAILS – IV
256	D-11	STORM SEWER – STANDARD DETAILS – I
257	D-12	STORM SEWER – STANDARD DETAILS – II
258	D-13	STORM SEWER – STANDARD DETAILS – III
259	D-14	CONCRETE PAVEMENT DETAILS
260	D-15	STREET AND SIDEWALK – STANDARD DETAILS – I
261	D-16	STREET AND SIDEWALK – STANDARD DETAILS – II
262	D-17	STREET AND SIDEWALK – STANDARD DETAILS – III
263	D-18	STREET AND SIDEWALK – STANDARD DETAILS – IV
264	D-19	MECHANICAL – STANDARD DETAILS – I
265	D-20	MECHANICAL – STANDARD DETAILS – II
266	D-21	MECHANICAL – STANDARD DETAILS – III
267	D-22	MECHANICAL – STANDARD DETAILS – IV
268	D-23	STRUCTURAL DETAILS
269	D-24	STANDARD CATWALK DETAILS – I
270	D-25	STANDARD CATWALK DETAILS – II
271	D-26	PRECAST CONCRETE CONTROL BUILDING & HVAC PLANS
272	D-27	PRECAST CONCRETE CONTROL BUILDING FOUNDATION
273	D-28	EMNORA # 2 PRECAST CONCRETE CONTROL BUILDING FOUNDATION
274	D-29	CATWALK PLATFORM CABINET STAIRCASE DETAILS
275	D-30	CONCRETE STAIR DETAILS
276	D-31	ELECTRICAL – LIGHTING FIXTURE SCHEDULE
277	D-32	ELECTRICAL – TYPICAL DETAILS – I
278	D-33	ELECTRICAL – TYPICAL DETAILS – II
279	D-34	ELECTRICAL – RADAR LEVEL TRANSMITTER GAUGING SYSTEM INSTALLATION & DETAILS – I
280	D-35	ELECTRICAL – RADAR LEVEL TRANSMITTER GAUGING SYSTEM INSTALLATION & DETAILS – II
281	D-36	CONCRETE LINED POND STANDARD DETAIL
282	D-37	CHERRY OAK ELECTRICAL GENERATOR FOUNDATION DETAILS – I
283	D-38	VORTEX MANHOLE DETAIL – SHADOWBRIAR DR
284	D-39	ODOR CONTROL SYSTEM – ANNUNCIATION

SHEET NO.	DWG NO.	SHEET TITLE
		STORMWATER POLLUTION PREVENTION PLAN
285	SWPPP-1	STORMWATER POLLUTION PREVENTION PLAN – BRETSHIRE #1
286	SWPPP-2	STORMWATER POLLUTION PREVENTION PLAN – CHERRY OAK
287	SWPPP-3	STORMWATER POLLUTION PREVENTION PLAN – RED GULLY – I
288	SWPPP-4	STORMWATER POLLUTION PREVENTION PLAN – RED GULLY – II
289	SWPPP-5	STORMWATER POLLUTION PREVENTION PLAN – ANNUNCIATION
290	SWPPP-6	STORMWATER POLLUTION PREVENTION PLAN – EMNORA #2
291	SWPPP-7	STORMWATER POLLUTION PREVENTION PLAN – SHADOW LAKES – I
292	SWPPP-8	STORMWATER POLLUTION PREVENTION PLAN – SHADOW LAKES – II
293	SWPPP-9	STORMWATER POLLUTION PREVENTION PLAN DETAILS – I
294	SWPPP-10	STORMWATER POLLUTION PREVENTION PLAN DETAILS – II
		TRAFFIC CONTROL PLAN
295	TCP-1	TRAFFIC CONTROL SEQUENCE OF CONSTRUCTION
296	TCP-2	SHADOWBRIAR DR – TRAFFIC CONTROL PLANS
297	TCP-3	EMNORA LN – TRAFFIC CONTROL PLANS
298	TCP-4	SHADOWBRIAR DR – DETOUR PLANS
299	TCP-5	EMNORA LN – DETOUR PLANS
300	TCP-6	TRAFFIC CONTROL – STANDARD DETAILS – I
301	TCP-7	TRAFFIC CONTROL – STANDARD DETAILS – II
302	TCP-8	TRAFFIC CONTROL – STANDARD DETAILS – III
303	TCP-9	TRAFFIC CONTROL – STANDARD DETAILS – IV
304	TCP-10	TRAFFIC CONTROL – STANDARD DETAILS – V
305	TCP-11	TRAFFIC CONTROL – STANDARD DETAILS – VI
306	TCP-12	TRAFFIC CONTROL – STANDARD DETAILS – VII
307	TCP-13	TRAFFIC CONTROL – STANDARD DETAILS – VIII
308	TCP-14	TRAFFIC CONTROL – STANDARD DETAILS – IX
		TREE PROTECTION PLAN
309	TPP-1	TREE PROTECTION PLAN – I
310	TPP-2	TREE PROTECTION PLAN – II
311	TPP-3	TREE PROTECTION PLAN – III
312	TPP-4	TREE PROTECTION PLAN – IV

ARCADIS
Infrastructure · Water · Environment · Buildings
1330 Post Oak Blvd, Suite 2250
Houston, TX 77056
Tel: 713-953-4800
Fax: 713-977-4620
www.arcadis.com
Texas Registered Engineering Firm F-533

SURVEYED BY: AMANI ENGR.
FB NO. P-6335

STATE OF TEXAS
DAVID F. RIDGWAY
105134
LICENSED
PROFESSIONAL ENGINEER
05/12/2026

CITY OF HOUSTON

HOUSTON PUBLIC WORKS

LIFT STATION REHABILITATION & RECONSTRUCTION
CONSENT DECREE

SHEET INDEX

G-3

WBS NUMBER	FOR CITY OF HOUSTON USE ONLY
R-000267-0175-4	
DRAWING SCALE	
AS NOTED	
CITY OF HOUSTON PM	
NP NAWARAJ PANTA, P.E.	
SHEET NO. 3 OF 312	

FILE PATH: C:\Users\omessan\DC\ACCDocs\Arcadis ACC US\AUS-30126616-Lift Station Rehab And Reconstruct CMAR\Project Files\10_WIP\10T Main PJ Folder\10T_GEN_General\03-Sheet Index.dwg
PLOT STYLE: COH.ctb PLOTTED: 2/25/2026 8:14 AM

GENERAL CONSTRUCTION NOTES:

1. CONSTRUCT WASTEWATER COLLECTION SYSTEMS, WATER LINES, STORM DRAINAGE AND STREET PAVING IN ACCORDANCE WITH THE LATEST EDITION OF THE PUBLICATIONS STANDARD CONSTRUCTION SPECIFICATIONS FOR WASTEWATER COLLECTION SYSTEMS, WATER LINES, STORM DRAINAGE AND STREET PAVING AND STANDARD CONSTRUCTION DETAILS FOR WASTEWATER COLLECTION SYSTEMS, WATERLINES, STORM DRAINAGE AND STREET PAVING PUBLISHED BY THE CITY OF HOUSTON, DEPARTMENT OF PUBLIC WORKS AND ENGINEERING.

2. THE GEOTECHNICAL INVESTIGATION FOR THIS PROJECT WAS CONDUCTED IN ACCORDANCE WITH CHAPTER 11 OF THE LATEST EDITION OF THE PUBLICATION INFRASTRUCTURE DESIGN MANUAL, PUBLISHED BY HOUSTON PUBLIC WORKS. SOILS REPORT WAS PREPARED BY GEOTEST ENGINEERING, INC REPORT NO. 1140291901, DATED DECEMBER 11, 2024.

3. UTILITIES PRESENTED ON THESE DRAWINGS ARE SHOWN BASED ON THE BEST AVAILABLE INFORMATION. CONTRACTOR SHALL VERIFY THE EXACT LOCATIONS IN THE FIELD PRIOR TO COMMENCING CONSTRUCTION. CONTRACTOR SHALL NOTIFY TEXAS ONE CALL AT 713-223-4567/811 OR /800-344-8377 AND LONE STAR NOTIFICATION CENTER AT 800-669-8344 AT LEAST 48 HOURS BEFORE PROCEEDING WITH ANY EXCAVATION. UTILITIES MARKED WITHIN THE PUBLIC RIGHT OF WAY OR IN EASEMENTS SHALL COMPLY WITH TAC TITLE 16, PART 1, CHAPTER 18, RULE §18.6 AND THE AMERICAN PUBLIC WORKS ADMINISTRATION (APWA) UNIFORM COLOR CODE.

4. CONTRACTOR SHALL BE RESPONSIBLE FOR DAMAGES TO EXISTING WATER, WASTEWATER, STORM WATER LINES AND TRAFFIC CONTROL DEVICES. DAMAGES SHALL BE REPAIRED IN ACCORDANCE WITH THE EFFECTIVE EDITION OF HOUSTON PUBLIC WORKS, STANDARD CONSTRUCTION SPECIFICATIONS FOR WASTEWATER COLLECTION SYSTEM, WATER LINES, STORM DRAINAGE, STREET PAVING, TRAFFIC AND STANDARD CONSTRUCTION DETAILS FOR WASTEWATER COLLECTION SYSTEMS, WATER LINES, STORM DRAINAGE, AND STREET PAVING, REFERENCED ABOVE AND SUPPLEMENTS, ADDENDA AND AMENDMENTS THERETO, AT NO ADDITIONAL COST TO THE CITY OF HOUSTON.

5. CONTRACTOR SHALL NOTIFY THE OFFICE OF THE CITY ENGINEER, HOUSTON PUBLIC WORKS AT 832-394-9098 OR VIA FAX 832-395-4424 FOR INSPECTION AT LEAST 48 HOURS PRIOR TO COMMENCING CONSTRUCTION.

6. ADEQUATE DRAINAGE SHALL BE MAINTAINED AT ALL TIMES DURING CONSTRUCTION AND ANY DRAINAGE DITCH OR STRUCTURE DISTURBED DURING CONSTRUCTION SHALL BE RESTORED TO EXISTING CONDITIONS OR BETTER AND TO THE SATISFACTION OF THE OWNING AUTHORITY.

7. CONTRACTOR SHALL TAKE NECESSARY PRECAUTIONS TO PROTECT ROOT SYSTEMS OF SHRUBS, PLANTS AND TREES ALONG THE AREA OF EXCAVATION.

8. CONTRACTOR SHALL COMPLY WITH LATEST EDITION OF OSHA REGULATIONS AND THE STATE OF TEXAS LAWS CONCERNING EXCAVATION.

9. CONTRACTOR SHALL MAINTAIN A SET OF REDLINE DRAWINGS AND RECORD AS-BUILT CONDITIONS DURING CONSTRUCTION. THESE REDLINE MARKED UP DRAWINGS WILL BE SUBMITTED TO THE DESIGN CONSULTANT WHO WILL MAKE THE CHANGES ON THE ORIGINAL TRACINGS, LABEL EACH SHEET IN THE SET AS "RECORD DRAWINGS", AND RETURN IT TO THE OFFICE CITY ENGINEER.

10. CONTRACTOR TO PERFORM CRITICAL LOCATES IN ALL AREAS WHERE PROPOSED WORK COULD NEGATIVELY AFFECT EXISTING UTILITIES. CONTRACTOR TO PROVIDE TABLE OF DEPTH BELOW GRADE AND ELEVATION. ALL RESULTS SHOULD BE PROVIDED TO THE ENGINEER AND SHOWN ON THE REDLINE DRAWINGS.

SANITARY SEWERS NOTES:

1. ALL SEWERS SHALL BE SUBJECT TO A STANDARD EXFILTRATION TEST. TESTS ARE TO BE PERFORMED ON THE TOTAL FOOTAGE OF SEWER LINE INCLUDED IN THE PROJECT. REQUIREMENTS OF TEXAS ADMINISTRATIVE CODE, TITLE 30 CHAPTER 217, "DESIGN CRITERIA FOR DOMESTIC WASTEWATER SYSTEMS" SHALL GOVERN WHERE CONFLICTS EXIST EXCEPT WHERE CITY REQUIREMENTS ARE MORE STRINGENT.

2. ALL MANHOLES ARE TO BE PER CITY OF HOUSTON STANDARD DETAILS DRAWING NUMBERS 02082-01, 02082-02, 02082N-02, 02082-03, AND 02082N-03 UNLESS OTHERWISE NOTED. USE THE LATEST VERSION AS APPLICABLE.

3. SANITARY SEWER MANHOLES WILL HAVE BEDDING AND BACKFILL PER CITY OF HOUSTON STANDARD DETAILS DRAWING NO. 02317-08 UNLESS OTHERWISE NOTED.

4. THE SANITARY SEWER PVC PIPE SHALL BE ASTM D 3034 TYPE PSM SDR 26 GRAVITY SEWER PIPE, ASTM D2241 SDR 26 PRESSURE RATED SEWER PIPE OR AWWA C-900 DR-18 GREEN PVC PRESSURE RATED SEWER PIPE BASED ON CONSTRUCTION CONDITION REQUIREMENT AND CONFORMING TO ASTM D1784 AND CITY OF HOUSTON STANDARD SPECIFICATION SECTION 02506 POLYVINYL CHLORIDE PIPE.

5. WHEN SS PRESSURE RATED PVC PIPE IS USED ON WATERLINE (WL) CROSSING UNDER CONDITION 1 OF COH IDM TABLE 7.3, THE SAME TYPE OF D2241 SDR 26 PVC PIPE OR C-900 GREEN DR-18 PVC GREEN PRESSURED TO BE UTILIZING IN-BETWEEN TWO SS MH'S. OR TO UTILIZE A DI TRANSITION ADAPTER FOR THE CONNECTING OF ASTM D-3034 PVC GRAVITY PIPE TO DI-OD AWWA C-900 PVC PIPE CENTERED AT WL WHEN CONNECTING TWO DIFFERENT TYPES OF PVC PIPES FOR SEWER CONSTRUCTION.

6. AWWA C-900 DR-18 PVC PIPE USES EITHER AWWA C900 DR-18 PVC FITTINGS OR DIP FITTINGS.

7. ALL SANITARY SEWER LINES UNDER PROPOSED OR FUTURE PAVEMENT AND TO A POINT ONE (1) FOOT BACK OF ALL PROPOSED OR FUTURE CURBS SHALL HAVE BEDDING PER CITY OF HOUSTON STANDARD DETAILS DRAWING NUMBERS 02317-01, 02317-02, OR 02317-03 AS APPLICABLE, WITH 1 ½ SACK CEMENT/CY STABILIZED SAND BACKFILL UP TO THE BOTTOM OF THE PAVEMENT SUBGRADE. 100 PSI PERFORMANCE RESULTS ARE STILL REQUIRED.

8. ALL NEW SANITARY SEWERS CROSSING WATER LINES WITH A CLEARANCE BETWEEN 12 INCHES AND 9 FEET SHALL HAVE A MINIMUM OF ONE 18' JOINT OF DUCTILE IRON OR (GREEN) C900 PVC PIPE MEETING ASTM SPECIFICATION D2241 CENTERED ON WATER LINE. WHEN WATER LINE IS BELOW SANITARY SEWER, PROVIDE MINIMUM 2 FOOT SEPARATION.

9. CONTRACTOR SHALL PROVIDE A MINIMUM HORIZONTAL CLEARANCE OF 9' FEET BETWEEN WATER LINES AND SANITARY SEWER MANHOLES AND LINES.

10. SANITARY SEWER MANHOLE RIMS OUTSIDE OF PROPOSED PAVING WILL BE SET 3" – 6" ABOVE THE SURROUNDING LEVEL FINISHED GRADE AFTER PAVING WITH SLOPED BACKFILL ADDED FOR STORM WATER TO DRAIN AWAY FROM MANHOLE RIM.

11. IN WET STABLE TRENCH AREAS USE BEDDING PER CITY OF HOUSTON STANDARD DETAILS DRAWING NUMBER 02317-02.

12. DEFLECTION TEST: DEFLECTION TESTS SHALL BE PERFORMED ON ALL FLEXIBLE AND SEMI-RIGID SEWER PIPE. THE TEST SHALL BE CONDUCTED AFTER THE FINAL BACKFILL HAS BEEN IN PLACE AT LEAST 30 DAYS. NO PIPE SHALL EXCEED A DEFLECTION OF 5% IF THE DEFLECTION TEST IS TO BE RUN USING A RIGID MANDREL, IT SHALL HAVE A DIAMETER EQUAL TO 95% OF THE INSIDE DIAMETER OF THE PIPE. THE TEST SHALL BE PERFORMED AS PER 30 TAC 217.57 LATEST AMENDMENT AND WITHOUT MECHANICAL PULLING DEVICES. NO BALL-TYPE MANDREL IS ALLOWED.

13. INFILTRATION, EXFILTRATION OR LOW-PRESSURE AIR TEST: EITHER OF THE FOLLOWING TESTS SHALL BE PERFORMED AS PER TAC, TITLE 30 217.57 WITHIN THE SPECIFIED TOLERANCES ON ALL GRAVITY SEWERS.

SANITARY SEWERS NOTES (CONT.):

A. INFILTRATION OR EXFILTRATION TEST: TOTAL LEAKAGE AS DETERMINED BY A HYDROSTATIC HEAD TEST SHALL NOT EXCEED 50 GALLONS PER INCH DIAMETER PER MILE OF PIPE PER 24 HOURS AT A MINIMUM TEST HEAD OF TWO (2) FEET.

B. LOW-PRESSURE AIR TEST: PERFORM TEST ACCORDING TO UNI-B-6-90 OR OTHER APPROPRIATE PROCEDURES. FOR SECTIONS OF PIPE LESS THAN 36" (INCH) AVERAGE INSIDE DIAMETER, THE MINIMUM ALLOWABLE TIME FOR PRESSURE DROP FROM 3.5 P.S.I.G. TO 2.5 P.S.I.G. SHALL BE AS FOLLOWS:

6" 340 SECONDS OR 0.855(L) FOR TEST LENGTHS GREATER THAN 398'

8" 454 SECONDS OR 1.520(L) FOR TEST LENGTHS GREATER THAN 298'

10" 567 SECONDS OR 2.374(L) FOR TEST LENGTHS GREATER THAN 239'

12" 680 SECONDS OR 3.419(L) FOR TEST LENGTHS GREATER THAN 199'

15" 850 SECONDS OR 5.342(L) FOR TEST LENGTHS GREATER THAN 159'

18" 1020 SECONDS OR 7.693(L) FOR TEST LENGTHS GREATER THAN 133'

WHERE L = LENGTH OF LINE OF SAME PIPE SIZE IN FEET.

14. "SAN. S. E." INDICATES "SANITARY SEWER EASEMENT"

15. FOR SANITARY MANHOLE (MH) RIMS SET INSIDE OF OR @ CURB & GUTTER PAVEMENT AND/OR BELOW T.C., MH RIMS WILL BE SET FLUSHED WITH AN ABUTTING PAVED SURFACE. THE (VALCUN, NEENAH OR EQUAL) HEAVY DUTY BOLTED SOLID MH COVER SHALL BE PROPERLY (AND SECURELY) ATTACHED AND SEALED TO ITS COMPATIBLE GASKETED FRAME BY USING BOTH A NEOPRENE GASKET AND (AT LEAST) 4 COUNTER-SUNK HEX-HEAD COARSE THREADED ½"-13 UNC STAINLESS STEEL BOLTS. THE HEAVY DUTY FRAME MH COVER SHALL BE SOLID (NO AIR HOLES). SAID FRAME SHALL BE BOTH EMBEDDED INTO THE MH'S TOP ALSO SECURELY ANCHORED TO THE UNDERLYING MH STRUCTURE WITH EITHER SECURELY ATTACHED EMBEDDED ANCHOR BOLTS OR THE CONCRETE MH'S EXPOSED REBARS WELDED TO THE FRAME OR OTHER EQUALLY SECURED METHODS TO PREVENT MH COVER/FRAME BLOW-OFFS/EJECTIONS.

STORM CONSTRUCTION NOTES:

1. STORM SEWER SHALL BE REINFORCED CONCRETE PIPE (C-76, CLASS III), AND SHALL BE INSTALLED, BEDDED, AND BACK FILLED IN ACCORDANCE WITH THE CITY OF HOUSTON DRAWING NOS. 2317-02, 02317-3, 02317-05, 02317-06, AND 02317-07 (JULY 2019) AS APPLICABLE UNLESS OTHERWISW SHOWN ON THE DRAWINGS.

2. ALL STORM SEWER CONSTRUCTED IN SIDELOT EASMENT SHALL BE R.C.P (C-76, CLASSIII) AND SHALL BE EMBEDDED IN ACCORDANCE WITH THE CITY OF HOUSTON DRAWING NOS. 02317-02, 02317-03, 02317-05, 02317-06, AND 02317-07 AS APPLICABLE.

3. ALL SEWER UNDER PROPOSED OR FUTURE PAVEMENT AND TO A POINT ONE (1) FOOT BACK OF ALL PROPOSED OR FUTURE CURBS SHALL BE BACKFILLED WITH 1-1/2 SACK CEMENT/C.Y. STABLIZED SAND TO WITHIN ONE (1) FOOT OF SUBGRADE. THE REMAINING DEPTH OF TRENCH SHALL BE BACKFILLED WITH SUITABLE EARTH MATERIAL.

4. ALL TRENCH BACKFILL SHALL BE IN 8" LIFTS, WITH TESTS TAKEN AT 100 FOOT INTERVALS IN EACH LIFT, AND MECHNICALLY COMPACTED TO A DENSITY OF NOT LESS THAN 95% OF THE MAXIMUM DRY DENSITY AS DETERMINED BY THE STANDARD PROCTOR COMACTION TEST (ASTM D-698/AASHTO T99).

5. CIRCULAR AND ELLIPTICAL REINFORCED CONCRETE PIPE SHALL BE INSTALLED USING RUBBER GASKET JOINT CONFORMING TO ASTM C443 AND ASTM C877 RESPECTIVELY.

6. ALL STORM SEWER PIPES AND INLET LEADS SHALL BE 24" AND LARGER R.C.P. (C-76, CLASSIII).

7. ALL PRPOSED PIPE STUB-OUTS FROM MANHOLES AND INLET LEADS ARE TO BE PLUGGED WITH 8" BRICK WALLS UNLESS OTHERWISE NOTED.

8. MINIMUM HORIZONTAL CLEARANCE BETWEEN ANY STORM PIPE AND BOX SHALL BE AT LEAST 48-INCHES FROM EXTERIOR OF THE STORM PIPE OR BOX TO THE EXTERIOR OF THE EXISTING OR PROPOSED PUBLIC OR PRIVATE UTILITY AND OTHER APPURTENANCES. MINIMUM VERTICAL CLEARANCE BETWEEN ANY STORM PIPE AND BOX SHALL BE AT LEAST 24-INCHES FROM EXTERIOR OF THE STORM PIPE OR BOX TO THE EXTERIOR OF THE EXISTING OR PROPOSED PUBLIC OR PRIVATE UTILITY AND OTHER APPURTENANCES.

9. ADJUST MANHOLE COVERS TO GRADE CONFORMING TO REQUIREMENTS OF SECTION 02086-ADJUSTING MANHOLES, INLETS, AND VALAVE BOXES TO GRADE.

10. THE CONTRACTOR SHALL BE RESPONSIBLE FOR PROTECTING, MAINTAINING, AND RESTORING ANY BACK SLOPE DRAINAGE SYSTEM DISTURBED AS A RESULT OF THIS WORK.

11. ALL DITCHES SHALL BE GRADED TO PROPOSED ELEVATIONS TO INSURE PROPER DRAINAGE. ALL OUTFALLS SHALL BE PROPERLY BACKFILLED AND COMPACTED. ALL DISTURBED AREA SHALL BE REGRADED, SEEDED, AND FERTILIZED.

12. ALL DRIVEWAYS WILL BE LOCATED TO AVOID EXISTING CURB INLET STRUCTURES.

WATERLINE NOTES:

1. WATERLINES SHALL BE CONSTRUCTED IN ACCORDANCE WITH THE LATEST CITY OF HOUSTON INFRASTRUCTURE DESIGN MANUAL, STANDARD SPECIFICATION AND CONSTRUCTION DETAILS.

GRADING NOTES:

1. GENERAL CONTRACTOR AND ALL SUBCONTRACTORS SHALL VERIFY THE SUITABILITY OF ALL EXISTING AND PROPOSED SITE CONDITIONS INCLUDING GRADES AND DIMENSIONS BEFORE STARTING CONSTRUCTION. THE ENGINEER SHALL BE NOTIFIED IMMEDIATELY OF ANY DISCREPANCIES.

2. BEFORE STARTING CONSTRUCTION, CONTRACTOR SHALL VERIFY BENCHMARK ELEVATION AND NOTIFY ENGINEER IF ANY DISCREPANCY AND/OR CONFLICT IS FOUND.

3. CONTRACTOR SHALL ENSURE THERE IS POSITIVE DRAINAGE FROM THE PROPOSED BUILDINGS AND NO PONDING IN PAVED AREAS, AND SHALL NOTIFY ENGINEER IF ANY GRADING DISCREPANCIES ARE FOUND IN THE EXISTING AND PROPOSED GRADES PRIOR TO PLACEMENT OF PAVEMENT OR UTILITIES.

4. CONTRACTOR SHALL PROTECT ALL MANHOLE COVERS, VALVE COVERS, VAULT LIDS, FIRE HYDRANTS, POWER POLES, GUY WIRES, AND TELEPHONE BOXES THAT ARE TO REMAIN IN PLACE AND UNDISTURBED DURING CONSTRUCTION.

5. ALL EXISTING CONCRETE PAVING, SIDEWALK, AND CURB DEMOLITION SHALL BE REMOVED AND DISPOSED OF BY CONTRACTOR. DISPOSAL SHALL BE AT AN APPROVED OFF-SITE, LAWFUL LOCATION, UNLESS DIRECTED OTHERWISE BY THE OWNER.

SWPPP NOTES:

1. CONTRACTOR SHALL IMPLEMENT INLET PROTECTION DEVICES AND REINFORCED FILTER FABRIC BARRIER ALONG ROAD AND SIDE DITCHES AT LOCATIONS SHOWN ON THE TYPICAL STORM WATER POLLUTION PREVENTION (SWPP) PLANS TO KEEP SILT AND OR EXCAVATED MATERIALS FROM ENTERING INTO THE STORM WATER INLETS AND DITCHES EVENTUALLY POLLUTING THE RECEIVING STORM.

2. DURING THE EXCAVATION PHASE OF THE PROJECT, CONTRACTOR SHALL SCHEDULE THE WORK IN SHORT SEGMENTS SO THAT EXCAVATION MATERIAL CAN BE QUICKLY HAULED AWAY FROM THE SITE AND TO PREVENT IT FROM STAYING UNCOLLECTED ON THE EXISTING PAVEMENT. ANY LOOSE EXCAVATED MATERIAL WHICH FALLS ON PAVEMENTS OR DRIVEWAYS SHALL BE SWEPT BACK INTO THE EXCAVATED AREA.

3. CONTRACTOR SHALL CLEAN UP THE EXISTING STREET INTERSECTIONS AND DRIVEWAYS DAILY, AS NECESSARY, TO REMOVE ANY EXCESS MUD, SILT OR ROCK TRACKED FORM THE EXCAVATED AREA.

4. CONTRACTOR SHALL FOLLOW GOOD HOUSEKEEPING PRACTICES DURING THE CONSTRUCTION OF THE PROJECT, ALWAYS CLEANING UP DIRT AND LOOSE MATERIAL AS CONSTRUCTION PROGRESSES.

5. CONTRACTOR TO INSPECT AND MAINTAIN THE AREAS LISTED BELOW AT LEAST ONCE EVERY FOURTEEN (14) CALENDAR DAYS AND WITHIN 24 HOURS OF THE END OF A STORM EVENT OF 0.5 INCHES OR GREATER.

   - DISTURBED AREAS OF THE CONSTRUCTION SITE THAT HAVE
   - NOT BEEN FINALLY STABILIZED.
   - AREAS USED FOR STORAGE OF MATERIALS THAT AREA
   - EXPOSED TO PRECIPITATION.
   - STRUCTURAL CONTROL MEASURES.
   - LOCATIONS WHERE VEHICLES ENTER OR EXIT THE SITE.

6. CONTRACTOR TO BE RESPONSIBLE TO MAINTAIN EXISTING DITCHES AND OR CULVERTS FOR UNOBSTRUCTED DRAINAGE AT ALL TIMES. WHERE SODDING IS DISTURBED BY EXCAVATION ON BACKFILLING OPERATIONS, SUCH AREAS SHALL BE REPLACED BY SEEDING OR SODDING. SLOPES 4:1 OR STEEPER SHALL BE REPLACED BY BLOCK SODDING.

7. CONTRACTOR SHALL REMOVE AND REPLACE INLET PROTECTION BARRIER PER REQUEST OF THE CITY RELATED TO SEVERE WEATHER EVENTS.

TRAFFIC NOTES:

CONTRACTOR OR OWNER SHALL SUBMIT TRAFFIC CONTROL PLANS WITH THE MOBILITY PERMIT APPLICATION. THE PLANS SHALL BE DRAWN TO SCALE AND SEALED BY A LICENSED PROFESSIONAL ENGINEER IN THE STATE OF TEXAS.

THE GENERAL NOTES THAT SHALL BE INCLUDED ON THE TRAFFIC CONTROL PLAN CAN BE FOUND IN CHAPTER 15 (15.12 TRAFFIC CONTROL PLAN) OF THE CITY OF HOUSTON'S (CITY) INFRASTRUCTURE DESIGN MANUAL (IDM). BELOW ARE SEVERAL KEY NOTES FROM THE IDM TO BE AWARE OF:

1. THE CONTRACTOR SHALL PROVIDE AND INSTALL TRAFFIC CONTROL DEVICES IN CONFORMANCE WITH PART VI OF THE TEXAS MANUAL ON UNIFORM TRAFFIC CONTROL DEVICES (TMUTCD) LATEST EDITION WITH REVISIONS DURING THE ENTIRE CONSTRUCTION PERIOD.

2. NO WORK SHALL BE PERFORMED IN RESIDENTIAL AREAS FROM 7:00PM TO 7:00AM.

3. CONTRACTOR SHALL MAINTAIN APPROVED NUMBER OF LANES OF TRAFFIC IN EACH DIRECTION DURING CONSTRUCTION WORKING HOURS. TRAFFIC CONTROL PLANS SHALL INCLUDE ONE-WAY AND/OR DETOUR PLANS. CONTRACTOR SHALL MAINTAIN ADA COMPLAINT PEDESTRIAN ACCESS TO BUS STOPS AND ADEQUATE BUS ACCESS TO THE BUS STOP.

4. CONTRACTOR SHALL COVER OPEN PAVEMENT EXCAVATIONS FOR MINOR UTILITY WORK WITH ANCHORED STEEL PLATES DURING NON-WORKING HOURS, OPEN LANES FOR NORMAL TRAFFIC FLOW WHEN FEASIBLE.

5. CONTRACTOR SHALL SECURE LANE/SIDEWALK/BICYCLE FACILITY CLOSURE PERMITS FROM TRANSPORTATION & DRAINAGE OPERATIONS (MOBILITY PERMIT SECTION AT WWW.GIMS.HOUSTONTX.GOV) BEFORE IMPLEMENTING THE TRAFFIC CONTROL PLAN. THE APPLICATION MUST BE SUBMITTED AT LEAST TEN BUSINESS DAYS PRIOR TO THE IMPLEMENTATION OF THE TRAFFIC CONTROL PLAN AND/OR BEGINNING CONSTRUCTION WORK. THE CONTRACTOR SHALL PROVIDE TRAFFIC CONTROL PLANS, CONSTRUCTION SEQUENCING, AND CONSTRUCTION SCHEDULE WITH THE APPLICATION.

6. CONTRACTOR SHALL HAVE APPROVED TRAFFIC CONTROL PLAN AND PERMIT AT THE JOB SITE FOR INSPECTION AT ALL TIMES ACCESS TO DRIVEWAYS ADJACENT TO THE CONSTRUCTION WORK ZONE SHALL BE MAINTAINED AT ALL TIMES AS MUCH AS POSSIBLE. ADDITIONAL CONES AND/OR DELINEATORS MAY BE REQUIRED TO DELINEATE THE DRIVEWAY ACCESS ROUTE THROUGH THE CONSTRUCTION WORK ZONE. A MINIMUM OF ONE TRAVEL LANE SHALL BE MAINTAINED ACROSS THE DRIVEWAY, UNLESS PRIOR WRITTEN APPROVAL IS OBTAINED FROM THE CITY OF HOUSTON.

7. ADDITIONAL OFF DUTY POLICE OFFICERS/FLAGGERS MAY BE REQUESTED TO DIRECT TRAFFIC WHEN LANES ARE BLOCKED AT THE DIRECTION OF THE CITY EVEN IF THEY ARE NOT SPECIFICALLY IDENTIFIED ON THE PROJECT PLANS. CONTRACTOR SHALL IMPLEMENT INLET PROTECTION DEVICES AND REINFORCED FILTER FABRIC BARRIER ALONG ROAD AND SIDE DITCHES AT LOCATIONS SHOWN ON THE TYPICAL STORM WATER POLLUTION PREVENTION (SWPP) PLANS TO KEEP SILT AND OR EXCAVATED MATERIALS FROM ENTERING INTO THE STORM WATER INLETS AND DITCHES EVENTUALLY POLLUTING THE RECEIVING STORM.

STREET & BRIDGE CONSTRUCTION NOTES:

1. FILL AREAS ON PLANS SHALL BE FILLED IN LAYERS NOT EXCEEDING 8" IN DEPTH AND EACH COMPACTED T NOT LESS THAN 95% STANDARD PROCTOR DENSITY PRIOR TO INSTALLATION OF WATER LINE AND FILL AREA SHALL BE SEEDED AND FERTILIZED WITHIN 10 WORKING DAYS.

2. UTILITY CONTRACTOR SHALL PROVIDE TEMPORARY SILT BARRIER FENCE ON ALL NON-CURBED INLETS WHICH WILL REMAIN IN PLACE AFTER UNDERGROUND CONTRACT IS COMPLETE.

3. CONTRACTOR SHALL PROVIDE SILT BARRIER FENCE ON ALL STAGE 1 CURB INLETS.

4. EXISTING PAVEMENTS, CURBS, DRIVEWAYS, AND SIDEWALKS DAMAGED OR REMOVED DURING CONSTRUCTION SHALL BE REPLACED TO CITY OF HOUSTON STANDARDS, WITH LATEST ADDENDA AND AMENDMENTS THERETO

5. CONDITION OF THE ROAD AND/OR RIGHT-OF-WAY UPON COMPLETION OF JOB SHALL BE AS GOOD AS OR BETTER THAN PRIOR TO STARTING WORK.

6. EXPOSED 15" OF REINFORCING STEEL AT PROPOSED SAWED JOINT IF NO REINFORCING STEEL EXISTS, USE HORIZONTAL DOWELS. HORIZONTAL DOWELS SHALL BE #6 BARS 24" LONG 24" C-C DRILLED AND EMBEDDED 8" INTO THE CENTER OF THE EXISTING SLAB WITH "PO ROC" OR EQUAL.

7. WHEELCHAIR RAMPS SHALL BE INSTALLED IN ACCORDANCE WITH CITY OF HOUSTON STANDARDS AT ALL INTERSECTIONS WHERE SIDEWALKS EXIST AND THE EXISTING CURB OR SIDEWALK IS DAMAGED OR REMOVED DURING CONSTRUCTION.

8. PRIOR TO STREET CONSTRUCTION, THE CONTRACTOR SHALL CONTACT HOUSTON PUBLIC WORKS AT (PHONE) 832-394-9578 AND COMPLY WITH ALL REQUIREMENTS FOR THE ISSUANCE OF NECESSARY PERMITS/WORK ORDERS FOR STREET CONSTRUCTION.

9. DOUBLE REFLECTORIZED BLUE TRAFFIC MARKERS SHALL BE PLACED 6-INCHES OFFSET OF THE CENTERLINE OF ALL FIRE HYDRANT LOCATIONS BY THE PAVING CONTRACTOR. HYDRANTS LOCATED AT INTERSECTIONS SHALL HAVE A BUTTON PLACED ON EACH STREET.

NO.	DATE	REVISION	APP.

NOTICE:
FOR YOUR SAFETY, YOU ARE REQUIRED BY TEXAS LAW TO CALL 811 AT LEAST 48 HOURS BEFORE YOU DIG SO THAT UNDERGROUND LINES CAN BE MARKED. THIS SIGNATURE DOES NOT FULFILL YOUR OBLIGATION TO CALL 811

VERIFICATION OF PRIVATE UTILITY LINES

N/A
Date

CenterPoint Energy natural gas utilities shown. (Gas service lines are not shown). This signature not be used for conflict verification.
Signature valid for six months.

N/A
Date

CenterPoint Energy/UNDERGROUND Electrical Facilities Verification ONLY. (This signature verifies existing underground facilities – not to be used for conflict verification)
Signature valid for six months.

Date

Approved for AT&T underground conduit facilities only.
Signature valid for one year.

ARCADIS
Infrastructure · Water · Environment · Buildings
1330 Post Oak Blvd, Suite 2250
Houston, TX 77056
Tel: 713-953-4800
Fax: 713-977-4620
www.arcadis.com
Texas Registered Engineering Firm F-533

SURVEYED BY: AMANI ENGR.
FB NO. P-6335

STATE OF TEXAS
DAVID F. RIDGWAY
105134
LICENSED
PROFESSIONAL ENGINEER
11/20/2025

CITY OF HOUSTON
HOUSTON PUBLIC WORKS

LIFT STATION REHABILITATION & RECONSTRUCTION
CONSENT DECREE

GENERAL NOTES-I

G-4

WBS NUMBER	FOR CITY OF HOUSTON USE ONLY
R-000267-0175-4	
DRAWING SCALE	
AS NOTED	
CITY OF HOUSTON PM	
NP NAWARAJ PANTA, P.E.	
SHEET NO. 4 OF 312	

FILE PATH: C:\Users\omesson\DC\ACCDocs\Arcadis ACC US\AUS-30126616-Lift Station Rehab And Reconstruct CMAR\Project Files\10_WIP\10T Main PJ Folder\10T_GEN_General\04-General Notes-1.dwg
PLOT STYLE: COH.ctb PLOTTED: 11/17/2025 1:04 PM

PRIVATE UTILITY NOTES:

AT&T TEXAS/ SWBT FACILITIES:

1. THE LOCATIONS OF AT&T TEXAS/SWBT FACILITIES ARE SHOWN IN AN APPROXIMATE WAY ONLY. THE CONTRACTOR SHALL DETERMINE THE EXACT LOCATION BEFORE COMMENCING WORK. HE AGREES TO BE FULLY RESPONSIBLE FOR ANY AND ALL DAMAGES WHICH MIGHT BE OCCASIONED BY THIS FAILURE TO EXACTLY LOCATE AND PRESERVE THESE UNDERGROUND UTILITIES.
2. THE CONTRACTOR SHALL CALL 1-800-344-8377 (TEXAS 811) A MINIMUM OF 48 HOURS PRIOR TO CONSTRUCTION TO HAVE UNDERGROUND LINES FIELD LOCATED.
3. WHEN EXCAVATING WITHIN EIGHTEEN INCHES (18") OF THE INDICATED LOCATION OF AT&T TEXAS/SWBT FACILITIES, ALL EXCAVATIONS MUST BE ACCOMPLISHED USING NON-MECHANIZED EXCAVATION PROCEDURES. WHEN BORING, THE CONTRACTOR SHALL EXPOSE THE AT&T TEXAS/SWBT FACILITIES.
4. WHEN AT&T TEXAS/SWBT FACILITIES ARE EXPOSED, THE CONTRACTOR WILL PROVIDE SUPPORT TO PREVENT DAMAGE TO THE CONDUIT DUCTS OR CABLES. WHEN EXCAVATING NEAR TELEPHONE POLES THE CONTRACTOR SHALL BRACE THE POLE FOR SUPPORT.
5. THE PRESENCE OR ABSENCE OF AT&T TEXAS/SWBT UNDERGROUND CONDUIT FACILITIES OR BURIED CABLE FACILITIES SHOWN ON THESE PLANS DOES NOT MEAN THAT THERE ARE NO DIRECT BURIED CABLES OR OTHER CABLES IN CONDUIT IN THE AREA.
6. PLEASE CONTACT THE AT&T TEXAS DAMAGE PREVENTION MANAGER KEVIN RAY AT (713) 614-1983 OR EMAIL HIM AT KR7896@ATT.COM, IF CABLE LOCATE REQUESTS ARE NOT COMPLETED FOR OUR AT&T TEXAS/SWBT FACILITIES.

CENTERPOINT ENERGY NOTES:

CAUTION: UNDERGROUND GAS FACILITIES

1. THE CONTRACTOR SHALL CONTACT THE UTILITY COORDINATING COMMITTEE AT 1-800-545-6005 OR 811 A MINIMUM OF 48 HOURS PRIOR TO CONSTRUCTION TO HAVE MAIN AND SERVICE LINES FIELD LOCATED.
   - -WHEN CENTERPOINT ENERGY PIPE LINE MARKINGS ARE NOT VISIBLE, CALL (713)-207-5463 OR (713)-945-8037 (7:00 AM TO 4:30 PM) FOR STATUS OF LINE LOCATION REQUEST BEFORE EXCAVATION BEGINS.
   - -WHEN EXCAVATING WITHIN EIGHTEEN INCHES (18") OF THE INDICATED LOCATION OF CENTERPOINT ENERGY FACILITIES, ALL EXCAVATION MUST BE ACCOMPLISHED USING NON-MECHANIZED EXCAVATION PROCEDURES.
   - -WHEN CENTERPOINT ENERGY FACILITIES ARE EXPOSED, SUFFICIENT SUPPORT MUST BE PROVIDED TO THE FACILITIES TO PREVENT EXCESSIVE STRESS ON THE PIPING.
   - -FOR EMERGENCIES REGARDING GAS LINES CALL (713)-659-2111 OR (713)-207-4200.
2. THE CONTRACTOR IS FULLY RESPONSIBLE FOR ANY DAMAGES CAUSED BY HIS FAILURE TO EXACTLY LOCATE AND PRESERVE THESE UNDERGROUND FACILITIES.

WARNING: OVERHEAD ELECTRICAL LINES

1. OVERHEAD LINES MAY EXIST ON THE PROPERTY. THE LOCATION OF OVERHEAD LINES HAS NOT BEEN SHOWN ON THESE DRAWINGS AS THE LINES ARE CLEARLY VISIBLE, BUT YOU SHOULD LOCATE THEM PRIOR TO BEGINNING ANY CONSTRUCTION. TEXAS LAW, SECTION 752, HEALTH & SAFETY CODE FORBIDS ACTIVITIES THAT OCCUR IN CLOSE PROXIMITY TO HIGH VOLTAGE LINES, SPECIFICALLY:
   - -ANY ACTIVITY WHERE PERSONS OR THINGS MAY COME WITHIN SIX (6) FEET OF LIVE OVERHEAD HIGH VOLTAGE LINES; AND
   - -OPERATING A CRANE, DERRICK, POWER SHOVEL, DRILLING RIG, PILE DRIVER, HOISTING EQUIPMENT, OR SIMILAR APPARATUS WITHIN 10 FEET OF LIVE OVERHEAD HIGH VOLTAGE LINES.
2. PARTIES RESPONSIBLE FOR THE WORK, INCLUDING CONTRACTORS, ARE LEGALLY RESPONSIBLE FOR THE SAFETY OF CONSTRUCTION WORKERS UNDER THIS LAW. THIS LAW CARRIES BOTH CRIMINAL AND CIVIL LIABILITY. TO ARRANGE FOR LINES TO BE TURNED OFF OR REMOVED CALL CENTERPOINT ENERGY AT 713-207-2222.

ACTIVITIES ON/OR ACROSS CENTERPOINT ENERGY FEE OR EASEMENT PROPERTY

1. NO APPROVAL TO USE, CROSS, OR OCCUPY NO CENTERPOINT FEE OR EASEMENT PROPERTY IS GIVEN. IF YOU NEED TO USE CENTERPOINT PROPERTY, PLEASE CONTACT OUR SURVEYING AND RIGHT OF WAY DIVISION AT (713) 207-6348 OR (713) 207-5769

WARNING: UNDERGROUND ELECTRICAL UTILITIES

1. THE CONTRACTOR SHALL CONTACT THE UTILITY COORDINATING COMMITTEE AT 1-800-545-6005 OR 811 A MINIMUM OF 48 HOURS PRIOR TO CONSTRUCTION TO HAVE MAIN AND SERVICE LINES FIELD LOCATED.
   - -ALL INFORMATION CONCERNING TYPE AND LOCATION OF UNDERGROUND UTILITIES IS NOT GUARANTEED TO BE ACCURATE OR ALL INCLUSIVE. THE CONTRACTORS ARE RESPONSIBLE MAKING THEIR OWN DETERMINATIONS AS TO TYPE AND LOCATION OF UNDERGROUND UTILITIES AS MAY BE NECESSARY TO AVOID DAMAGE THERETO. THE CONTRACTOR SHALL VERIFY LOCATION OF UNDERGROUND PIPELINES, CONDUITS, AND STRUCTURES BY CONTACTING OWNERS OF UNDERGROUND UTILITIES OR BY EXCAVATING IN ADVANCE OF CONSTRUCTION.
   - -THE CONTRACTOR IS RESPONSIBLE FOR DETERMINING THE EXACT LOCATION OF ALL UTILITIES WHEN AND WHERE THEY THEY FALL IN THE PATH OF CONSTRUCTION.
   - -THE CONTRACTOR IS ALSO RESPONSIBLE FOR CONTACTING THE UTILITY COORDINATING COMMITTEE AT (713) 223-4567 AND TEXAS ONE CALL AT 1-800-245-4545, FORTY-EIGHT (48) HOURS PRIOR TO ANY CONSTRUCTION.
   - -THE LOCATION OF ANY CENTERPOINT ENERGY UTILITIES ARE SHOWN IN APPROXIMATE WAY ONLY. THE CONTRACTOR SHALL DETERMINE THE EXACT LOCATION BEFORE COMMENCING WORK. THEY AGREE TO BE FULLY RESPONSIBLE FOR ANY AND ALL DAMAGES WHICH MIGHT BE OCCASIONED BY THIS FAILURE TO EXACTLY LOCATE AND PRESERVE THESE UNDERGROUND UTILITIES.
   - -ALL PROPOSED FACILITIES SHALL MAINTAIN 12" CLEAR FROM ALL EXISTING UTILITIES.

STANDARD NOTES FOR CONSTRUCTION DRAWINGS (HCFCD):

1. OBTAIN AND COMPLY WITH ALL APPLICABLE CITY, COUNTY, STATE, AND FEDERAL PERMITS AND APPROVALS, WITH ASSISTANCE FROM ENGINEER, IF NECESSARY. OBTAIN PERMIT (CERTIFICATION) FROM HARRIS COUNTY ENGINEER TO ENTER HARRIS COUNTY FLOOD CONTROL DISTRICT RIGHT-OF-WAY.
2. NOTIFY THE HARRIS COUNTY FLOOD CONTROL DISTRICT'S PROPERTY MANAGEMENT DEPARTMENT IN WRITING AT LEAST 48 HOURS PRIOR TO CONSTRUCTION. SUBMIT THE HCFCD 48 HOUR PRE-CONSTRUCTION NOTIFICATION FORM, A COPY OF THE APPROVED CONSTRUCTION DRAWINGS, AND A COPY OF THE CORPS OF ENGINEERS INDIVIDUAL SECTION 404 PERMIT, IF APPLICABLE, TO HCFCD, 9900 NORTHWEST FREEWAY, HOUSTON, TEXAS 77092, ATTN: PROPERTY MANAGEMENT DEPT. BY HAND DELIVERY, OR FAX TO 713-684-4129 (FAX NUMBER).
3. ENGINEER SHALL SUBMIT CERTIFICATION LETTER AND RECORD DRAWINGS TO THE HARRIS COUNTY FLOOD CONTROL DISTRICT'S PROPERTY MANAGEMENT DEPARTMENT REQUESTING INSPECTION OF ITEMS CONSTRUCTED IN HARRIS COUNTY FLOOD CONTROL DISTRICT RIGHT-OF-WAY. PRIOR TO REQUESTING INSPECTION, THE DRAINAGE RIGHT-OF-WAY AND/OR EASEMENTS SHALL BE STAKED AND FLAGGED.
4. PROTECT, MAINTAIN, AND RESTORE EXISTING BACKSLOPE DRAINAGE SYSTEMS.
5. BACKSLOPE SWALE AND INTERCEPTOR STRUCTURE ELEVATIONS AND LOCATIONS SHOWN ON PLANS ARE APPROXIMATE. FINAL ELEVATIONS AND LOCATIONS SHALL BE FIELD VERIFIED BY THE ENGINEER PRIOR TO INSTALLATION.
6. ESTABLISH TURF GRASS ON ALL DISTURBED AREAS WITHIN THE CHANNEL OR DETENTION RIGHT-OF-WAY, EXCEPT THE CHANNEL BOTTOM AND WHERE STRUCTURAL EROSION MEASURES ARE USED. MINIMUM ACCEPTANCE CRITERIA ARE 75% COVERAGE OF LIVE BERMUDA GRASS AND NO EROSION OR RILLS DEEPER THAN 4".
7. BACKFILL IN ACCORDANCE WITH THE HARRIS COUNTY FLOOD CONTROL DISTRICT STANDARD SPECIFICATION, SECTION 02315 – EXCAVATING AND BACKFILLING, OR EQUIVALENT.
8. EXCAVATE CHANNEL FLOWLINE TO DESIGN ELEVATION AS SHOWN ON PLANS AND DOWNSTREAM, AS NECESSARY, TO ENSURE NO WATER REMAINS IN THE FACILITY (STORM SEWER, LATERAL CHANNEL, OR DRY BOTTOM DETENTION BASIN) DURING NORMAL WATER SURFACE CONDITIONS IN THE CHANNEL, SO THE FACILITY WILL FUNCTION AS INTENDED. FOR WET BOTTOM DETENTION BASINS, ENSURE NO WATER IS ABOVE THE DESIGN LEVEL IN THE WET BOTTOM DURING NORMAL WATER SURFACE CONDITIONS IN THE CHANNEL.
9. MAINTAIN FLOW IN CHANNEL DURING CONSTRUCTION AND RESTORE CHANNEL TO ORIGINAL CONDITION.
10. REMOVE ALL EXCAVATED MATERIAL FROM THE HARRIS COUNTY FLOOD CONTROL DISTRICT OR DRAINAGE RIGHT-OF-WAY. NO FILL IS TO BE PLACED WITHIN A DESIGNATED FLOOD PLAIN AREA WITHOUT FIRST OBTAINING A FILL PERMIT FROM THE APPROPRIATE JURISDICTIONAL AUTHORITY.

GENERAL NOTES – METRO:

1. CONTRACTOR SHALL NOTIFY METRO AT 713-615-6195 TWO WEEKS PRIOR TO DISTURBING EXISTING BUS STOPS.
1. CONTRACTOR SHALL COORDINATE WITH METRO TO REMOVE EXISTING AMENITIES.
2. BUS STOPS SHALL CONSTRUCTED PER CITY OF HOUSTON INFRASTRUCTURE DESIGN MANUAL AND MEET CURRENT ADA REQUIREMENTS

NO.	DATE	REVISION	APP.

NOTICE:
FOR YOUR SAFETY, YOU ARE REQUIRED BY TEXAS LAW TO CALL 811 AT LEAST 48 HOURS BEFORE YOU DIG SO THAT UNDERGROUND LINES CAN BE MARKED. THIS SIGNATURE DOES NOT FULFILL YOUR OBLIGATION TO CALL 811

VERIFICATION OF PRIVATE UTILITY LINES

Mike Brower 02/17/26
Date

CenterPoint Energy natural gas utilities shown. (Gas service lines are not shown). This signature not be used for conflict verification.
Signature valid for six months.

Mike Brower 02/17/26
Date

CenterPoint Energy/UNDERGROUND Electrical Facilities Verification ONLY. (This signature verifies existing underground facilities – not to be used for conflict verification)
Signature valid for six months.

Tarina Allison 02/16/2026
Date

Approved for AT&T underground conduit facilities only.
Signature valid for one year.

ARCADIS
Infrastructure · Water · Environment · Buildings
1330 Post Oak Blvd, Suite 2250
Houston, TX 77056
Tel: 713-953-4800
Fax: 713-977-4620
www.arcadis.com
Texas Registered Engineering Firm F-533

SURVEYED BY: AMANI ENGR.
FB NO. P-6335

STATE OF TEXAS
DAVID F. RIDGWAY
105134
LICENSED
PROFESSIONAL ENGINEER
01/26/2026

CITY OF HOUSTON
HOUSTON PUBLIC WORKS

LIFT STATION REHABILITATION & RECONSTRUCTION CONSENT DECREE

GENERAL NOTES–II

G–5

WBS NUMBER	FOR CITY OF HOUSTON USE ONLY
R-000267-0175-4	
DRAWING SCALE	
AS NOTED	
CITY OF HOUSTON PM	
NP NAWARAJ PANTA, P.E.	
SHEET NO. 5 OF 312	

FILE PATH: C:\Users\omessan\DC\ACCDocs\Arcadis ACC US\AUS-30126616-Lift Station Rehab And Reconstruct CMAR\Project Files\10_WIP\10T Main PJ Folder\10T_GEN_General\05-General Notes-II.dwg
PLOT STYLE: COH.ctb PLOTTED: 2/16/2026 4:56 PM

EXISTING PLAN VIEW

- WATER METER
- WATER VALVE (GATE)
- WATER VALVE (BUTTERFLY)
- FIRE HYDRANT/FLUSHING VALVE
- TAPPING SLEEVE & VALVE
- REDUCER
- ROUND CONNECTION
- SANITARY SEWER CLEANOUT & MANHOLE
- STORM SEWER MANHOLE
- STORM SEWER INLETS
- CULVERT PIPE AND HEADWALL
- TOP OF CURB ELEVATION
- GUTTER ELEVATION
- TOP OF PAVEMENT ELEVATION
- CONTOUR LINE
- ROW LINE
- PROPERTY LINE
- LOT LINES
- EASEMENT LINE
- CENTER LINE OF ROW
- TRANSIT LINE
- EDGE OF DITCHES
- CENTER LINE OF DITCHES
- EDGE OF DITCHES
- FENCE LINE, WOOD
- FENCE LINE, CHAIN LINK
- FENCE LINE, BARBED WIRE
- FENCE LINE, HOG WIRE
- EDGE OF CONCRETE
- CURB LINE
- CONCRETE WALK
- EDGE OF ASPHALT
- EDGE OF SHELL OR GRAVEL
- DIMENSION LINE
- AERIAL POWER LINE
- UNDERGROUND POWER LINE
- GAS LINE
- UNKNOWN UNDERGROUND LINE
- OIL PIPELINE
- UNDERGROUND TELECOMM LINE W/VAULT
- AERIAL TELECOMM LINE
- RAILROAD LINE
- WATER LINE
- SANITARY SEWER LINE
- STORM SEWER LINE
- SANITARY SEWER FORCE MAIN
- RECLAIMED WATER LINE
- NON–POTABLE WATER LINE
- GAS METER
- GAS VALVE
- PROPANE LINE
- STEAM LINE
- MISC UNDERGROUND PIPELINE LABLE

PROPOSED PLAN VIEW

- WATER METER
- WATER VALVE (GATE)
- WATER VALVE (BUTTERFLY)
- FIRE HYDRANT/FLUSHING VALVE
- TAPPING SLEEVE & VALVE
- REDUCER
- ROUND CONNECTION
- SANITARY SEWER CLEANOUT & MANHOLE
- STORM SEWER MANHOLE
- STORM SEWER INLETS
- CULVERT PIPE AND HEADWALL
- TOP OF CURB ELEVATION
- GUTTER ELEVATION
- TOP OF PAVEMENT ELEVATION
- CONTOUR LINE
- ROW LINE
- PROPERTY LINE
- LOT LINES
- EASEMENT LINE
- CENTER LINE OF ROW
- TRANSIT LINE
- EDGE OF DITCHES
- CENTER LINE OF DITCHES
- EDGE OF DITCHES
- FENCE LINE, WOOD
- FENCE LINE, CHAIN LINK
- FENCE LINE, BARBED WIRE
- FENCE LINE, HOG WIRE
- EDGE OF CONCRETE
- CURB LINE
- CONCRETE WALK
- EDGE OF ASPHALT
- EDGE OF SHELL OR GRAVEL
- DIMENSION LINE
- AERIAL POWER LINE
- UNDERGROUND POWER LINE
- GAS LINE
- UNKNOWN UNDERGROUND LINE
- OIL PIPELINE
- UNDERGROUND TELECOMM LINE W/ VAULT
- AERIAL TELECOMM LINE
- RAILROAD LINE
- WATER LINE
- SANITARY SEWER LINE
- STORM SEWER LINE
- SANITARY SEWER FORCE MAIN
- RECLAIMED WATER LINE
- NON–POTABLE WATER LINE
- GAS METER
- GAS VALVE
- PROPANE LINE
- STEAM LINE
- MISC UNDERGROUND PIPELINE LABLE
- MATCH LINE

EXISTING PLAN VIEW

- PAVING HEADER
- BUILDING, RESIDENTIAL
- BUILDING, COMMERCIAL
- TREE
- HEDGE
- IRON PIPE OR IRON ROD MONUMENT
- POINT OF INTERSECTION (PI)
- POINT OF CURVE (PC)
- POINT OF TANGENCY (PT)
- POWER POLE
- POWER POLE W/DOWN GUY

EXISTING PROFILE VIEW

- NORTH OR EAST PROPERTY LINE
- SOUTH OR WEST PROPERTY LINE
- NORTH OR EAST CURB
- SOUTH OR WEST CURB
- NORTH OR EAST DITCH
- SOUTH OR WEST DITCH
- NORTH OR EAST NATURAL GROUND
- SOUTH OR WEST NATURAL GROUND
- NORTH OR EAST CULVERT
- SOUTH OR WEST CULVERT
- CENTERLINE OF ROW
- CENTERPOINT ENERGY CONDUIT
- GAS LINE
- WESTERN UNION
- AT&T CONDUIT
- WATER LINE
- SANITARY SEWER LINE
- STORM SEWER LINE
- SANITARY SEWER FORCE MAIN
- RECLAIMED WATER LINE
- NON–POTABLE WATER LINE
- CENTERPOINT ENERGY MANHOLE
- AT&T MANHOLE
- WATER LINE MANHOLE
- SANITARY SEWER MANHOLE & CLEANOUT
- STORM SEWER MANHOLE
- STORM SEWER INLET

PROPOSED PLAN VIEW

- PAVING HEADER
- BUILDING, RESIDENTIAL
- BUILDING, COMMERCIAL
- TREE
- HEDGE
- IRON PIPE OR IRON ROD MONUMENT
- POINT OF INTERSECTION (PI)
- POINT OF CURVE (PC)
- POINT OF TANGENCY (PT)
- POWER POLE
- POWER POLE W/DOWN GUY

PROPOSED PROFILE VIEW

- NORTH OR EAST PROPERTY LINE
- SOUTH OR WEST PROPERTY LINE
- NORTH OR EAST CURB
- SOUTH OR WEST CURB
- NORTH OR EAST DITCH
- SOUTH OR WEST DITCH
- NORTH OR EAST NATURAL GROUND
- SOUTH OR WEST NATURAL GROUND
- NORTH OR EAST CULVERT
- SOUTH OR WEST CULVERT
- CENTERLINE OF ROW
- CENTERPOINT ENERGY CONDUIT
- GAS LINE
- WESTERN UNION
- AT&T CONDUIT
- WATER LINE
- SANITARY SEWER LINE
- STORM SEWER LINE
- SANITARY SEWER FORCE MAIN
- RECLAIMED WATER LINE
- NON–POTABLE WATER LINE
- CENTERPOINT ENERGY MANHOLE
- AT&T MANHOLE
- WATER LINE MANHOLE
- SANITARY SEWER MANHOLE & CLEANOUT
- STORM SEWER MANHOLE
- STORM SEWER INLET

MISC STANDARD ELEMENTS

- COH NORTH ARROW
- COH BAR SCALE (SCALE: 1"=20')
- REVISION CLOUD/DELTA
- DETAIL/SECTION TITLE (SCALE: 1:1)
- SECTION CALLOUT
- DETAIL CALLOUT

NO.	DATE	REVISION	APP.

ARCADIS
Infrastructure · Water · Environment · Buildings
1330 Post Oak Blvd, Suite 2250
Houston, TX 77056
Tel: 713–953–4800
Fax: 713–977–4620
www.arcadis.com
Texas Registered Engineering Firm F–533

SURVEYED BY: AMANI ENGR.
FB NO. P–6335

STATE OF TEXAS · DAVID F. RIDGWAY · 105134 · LICENSED PROFESSIONAL ENGINEER · 11/20/2025

CITY OF HOUSTON

HOUSTON PUBLIC WORKS

LIFT STATION REHABILITATION & RECONSTRUCTION
CONSENT DECREE

LEGEND & ABBREVIATIONS–I

G–6

WBS NUMBER	FOR CITY OF HOUSTON USE ONLY
R–000267–0175–4	
DRAWING SCALE	
AS NOTED	
CITY OF HOUSTON PM	
NP NAWARAJ PANTA, P.E.	
SHEET NO. 6 OF 312	

FILE PATH: C:\Users\tomesson\DC\ACCDocs\Arcadis ACC US\AUS–30126616–Lift Station Rehab And Reconstruct CMAR\Project Files\10_WIP\10T Main PJ Folder\10T_GEN_General\06–Legend & Abbrevations–I.dwg
PLOT STYLE: COH.ctb PLOTTED: 11/17/2025 1:06 PM

ABBREVIATIONS:

&	AND
@	AT
AB	ALL BELL
AC	ACRE / ASBESTOS CEMENT
AI/VR	AIR INLET / VACUUM RELIEF
APPROX	APPROXIMATELY
ASPH	ASPHALT
AVE	AVENUE
℄	BASELINE
B/B	BACK TO BACK
BC	BACK OF CURB
BFV	BUTTERFLY VALVE
BL	BUILDING LINE
BLDG	BUILDING
BLVD	BOULEVARD
℄	CENTER LINE
C/C	CENTER TO CENTER
CGMP	CORRUGATED GALVANIZED METAL PIPE
CIPP	CURED IN PLACE PIPE
CMP	CORRUGATED METAL PIPE
CIP	CAST IRON PIPE
CLR	CLEARANCE
CO	CLEAN OUT
COH	CITY OF HOUSTON
CONC	CONCRETE
CONSTR	CONSTRUCTION
CPEE	CENTERPOINT ENERGY ELECTRIC
CPEG	CENTERPOINT ENERGY GAS
DET	DETAIL
DIA	DIAMETER
DIP	DUCTILE IRON PIPE
DR	DRIVE
DWG	DRAWING
DWY	DRIVEWAY
E	EAST
EL	ELEVATION
EP	EDGE OF PAVEMENT
E/R	END OF RADIUS
ESMT	EASEMENT
EXST	EXISTING
FC	FACE OF CURB
F/F	FACE TO FACE
FFE	FINISHED FLOOR ELEVATION
FH	FIRE HYDRANT
℄	FLOW LINE
FM	FORCE MAIN
FT	FEET
GPS	GLOBAL POSITIONING SYSTEM
GV	GATE VALVE
GV&B	GATE VALVE AND BOX
HCFCD	HARRIS COUNTY FLOOD CONTROL DISTRICT
HDPE	HIGH-DENSITY POLYETHYLENE
HGL	HYDRAULIC GRADE LINE
HP	HIGH PRESSURE
INV EL	INVERT ELEVATION
IP	INTERMEDIATE PRESSURE
IR	IRON ROD

ABBREVIATIONS:

J-BOX	JUNCTION BOX
JT	JOINT
JUNCT	JUNCTION
LF	LINEAR FEET
LN	LANE
LPT	LOW POINT
LT	LEFT
LS	LIFT STATION
MAX	MAXIMUM
METRO	METROPOLITAN TRANSIT AUTHORITY
MH	MANHOLE
MIN	MINIMUM
MON	MONUMENT
N	NORTH
NA	NOT APPLICABLE
NAVD	NORTH AMERICAN VERTICAL DATUM
NG	NATURAL GROUND
NO	NUMBER
NTS	NOT TO SCALE
OCC	ZERO CURB CUT
OS	OFFSET
OH	OVERHEAD
PC	POINT OF CURVE
PCC	POINT OF COMPOUND CURVATURE
PCCP	PRESTRESSED CONCRETE CYLINDER PIPE
PERM	PERMANENT
PGL	PROFILE GRADE LINE
PI	POINT OF INTERSECTION
PL	PROPERTY LINE
PNT	POINT
PPCA	POTENTIALLY PETROLEUM CONTAMINATED AREA
PRC	POINT OF REVERSE
PROP	PROPOSED
PSI	POUND PER SQUARE INCH
PT	POINT OF TANGENCY
PVC	POLYVINYL CHLORIDE PIPE / POINT OF VERTICAL CURVATURE
PVMT	PAVEMENT
PVI	POINT OF VERTICAL INTERSECTION
PVT	POINT OF VERTICAL TANGENCY

ABBREVIATIONS:

(R)	RECORD DRAWING
R	RADIUS
RCB	REINFORCED CONCRETE BOX
RCP	REINFORCED CONCRETE PIPE
RD	ROAD
REF	REFER
REINF	REINFORCED
REM	REMOVABLE
RJ	RESTRAINED JOINT
ROW	RIGHT OF WAY
RR	RAILROAD
RRPM	REFLECTIVE REMOVABLE PAVEMENT MARKERS
RT	RIGHT
S	SOUTH
SAN	SANITARY
SCHED	SCHEDULE
SF	SQUARE FEET
SHT	SHEET
SPEC	SPECIFICATION
SSE	SANITARY SEWER EASEMENT
ST	STREET
STA	STATION
STD	STANDARD
STL	STEEL
STM	STORM
SWBT	SOUTHWESTERN BELL TELEPHONE
SWR	SEWER
SY	SQUARE YARD
TAN	TANGENT
TBM	TEMPORARY BENCHMARK
TEMP	TEMPORARY
TOB	TOP OF BANK
TOC	TOP OF CURB
TOP	TOP OF PAVEMENT
TOS	TOP OF STACK
TS&V	TAPPING SLEEVE AND VALVE
TXDOT	TEXAS DEPARTMENT OF TRANSPORTATION
TYP	TYPICAL
UE	UTILITY EASEMENT
UGND	UNDERGROUND
VC	VERTICAL CURVE
VPI	VERTICAL POINT OF INTERSECTION
W	WEST
W/	WITH
WL	WATER LINE
WLE	WATER LINE EASEMENT
WM	WATER METER
WP	WOOD POLE
WSEL	WATER SURFACE ELEVATION
WV	WATER VALVE
WWTP	WASTE WATER TREATMENT PLANT

NO.	DATE	REVISION	APP.

NOTICE:
FOR YOUR SAFETY, YOU ARE REQUIRED BY TEXAS LAW TO CALL 811 AT LEAST 48 HOURS BEFORE YOU DIG SO THAT UNDERGROUND LINES CAN BE MARKED. THIS SIGNATURE DOES NOT FULFILL YOUR OBLIGATION TO CALL 811

VERIFICATION OF PRIVATE UTILITY LINES

N/A

Date

CenterPoint Energy natural gas utilities shown. (Gas service lines are not shown). This signature not be used for conflict verification.

Signature valid for six months.

N/A

Date

CenterPoint Energy/UNDERGROUND Electrical Facilities Verification ONLY. (This signature verifies existing underground facilities – not to be used for conflict verification)

Signature valid for six months.

Date

Approved for AT&T underground conduit facilities only.
Signature valid for one year.

ARCADIS
Infrastructure · Water · Environment · Buildings
1330 Post Oak Blvd, Suite 2250
Houston, TX 77056
Tel: 713-953-4800
Fax: 713-977-4620
www.arcadis.com
Texas Registered Engineering Firm F-533

SURVEYED BY: **AMANI ENGR.**
FB NO. P-6335

STATE OF TEXAS
DAVID F. RIDGWAY
105134
LICENSED
PROFESSIONAL ENGINEER
11/20/2025

CITY OF HOUSTON
HOUSTON PUBLIC WORKS

LIFT STATION REHABILITATION & RECONSTRUCTION
CONSENT DECREE

LEGEND & ABBREVIATIONS-II

G-7

WBS NUMBER	FOR CITY OF HOUSTON USE ONLY
R-000267-0175-4	
DRAWING SCALE	
AS NOTED	
CITY OF HOUSTON PM	
NP NAWARAJ PANTA, P.E.	
SHEET NO. 7 OF 312	

FILE PATH: C:\Users\omessan\DC\ACCDocs\Arcadis ACC US\AUS-30126616-Lift Station Rehab And Reconstruct CMAR\Project Files\10_WIP\10T Main PJ Folder\10T_GEN_General\07-Legend & Abbreviations-II.dwg
PLOT STYLE: COH.ctb PLOTTED: 11/17/2025 1:15 PM

GENERAL NOTES FOR STRUCTURES

CONCRETE

1. DESIGN SHALL CONFORM TO THE LATEST BUILDING CODE REQUIREMENTS FOR STRUCTURAL CONCRETE (ACI 318–19) WITH SPECIAL REQUIREMENTS OF ENVIRONMENTAL ENGINEERING CONCRETE STRUCTURES (ACI 350–20). THE DESIGN SHALL CONFORM TO THE INTERNATIONAL BUILDING CODE (IBC 2021) ADOPTED BY THE CITY OF HOUSTON.
2. ALL REINFORCING BARS SHALL CONFORM TO ASTM A–615, GRADE 60. ARRANGEMENT AND DETAILS OF REINFORCING STEEL, INCLUDING BAR SUPPORTS AND SPACERS, SHALL BE IN ACCORDANCE WITH THE LATEST ACI DETAILING MANUAL, UNLESS OTHERWISE NOTED
3. ALL SLAB AND BEAM REINFORCEMENT SHALL HAVE A MINIMUM EXTENSION INTO THE SUPPORT IN ACCORDANCE WITH THE LATEST ACI CODE. IF SUCH EXTENSION IS NOT POSSIBLE, BARS SHALL TERMINATE IN STANDARD HOOKS.
4. HORIZONTAL WALL REINFORCEMENT AND TEMPERATURE REINFORCEMENT SHALL LAP A MINIMUM OF 1.7 Ld AT SPLICES. WALL DOWELS AND WALL BAR EXTENSIONS AND ALL STRESS SPLICES SHALL LAP A MINIMUM OF 1.7 Ld, UNLESS OTHERWISE NOTED.
5. WALL OR COLUMNS SHALL HAVE DOWELS FROM FOUNDATIONS OR CONSTRUCTION BELOW OF SAME SIZE AND SPACING AS WALL OR COLUMN VERTICAL STEEL.
6. UNLESS OTHERWISE NOTED ON THE DRAWINGS, CONCRETE COMPRESSIVE STRENGTH AT 28 DAYS SHALL NOT BE LESS THAN THE FOLLOWING:

   - STRUCTURAL MEMBERS, FOUNDATIONS, WALLS AND SUSPENDED SLABS 4,000 PSI
   - SLABS ON GRADE ---------- 4,000 PSI
   - LEAN CONCRETE CLASS B ---------- 1,500 PSI
   - GROUT FILL CLASS H ---------- 3,000 PSI

7. UNLESS SHOWN OTHERWISE, THE COVER FOR REINFORCING STEEL SHALL BE AS FOLLOWS:

   - SLABS
     TOP AND BOTTOM OF FORMED SLABS ---------- 2"
     TOP OF WALK AND DRIVEWAY SLABS ---------- 2"
     SURFACES IN CONTACT WITH LIQUID ---------- 2"
     BOTTOM OF SLABS ON FILL OR SOIL ---------- 3"
   - FOOTINGS:
     TOP AND SIDES ---------- 2 1/2"
     BOTTOM ---------- 3"
   - WALLS:
     12" OR OVER IN THICKNESS WITH POURS LESS THAN 10 FEET HIGH----- 2"
     12" OR OVER IN THICKNESS WITH POURS MORE THAN 10 FEET HIGH----- 2 1/2"
   - BEAMS AND GIRDERS:
     COVER AT TOP, BOTTOM OR SIDES OF LONGITUDINAL REINF---------- 2"
   - COLUMNS:
     COVER FOR VERTICAL BARS ---------- 2"

8. HORIZONTAL AND VERTICAL CONSTRUCTION JOINTS SHOWN OR NOTED ON THE PLANS ARE RECOMMENDED. ANY DEVIATION FROM THOSE SHOWN SHALL HAVE APPROVAL OF THE ENGINEER.
9. ANY STOP IN FRAMED CONCRETE WORK MUST BE MADE IN THE CENTER OF THE SPAN AND INCORPORATE AN APPROVED KEYWAY. REINFORCEMENT SHALL EXTEND THROUGH THESE JOINTS IF REQUIRED FOR CONTINUITY.
10. USE TYPE 'C2' JOINT FOR ALL CONSTRUCTION JOINTS IN WALLS AND SLABS BELOW GRADE AND WALLS WHICH SEPARATE AREAS OF SOIL OR LIQUID FROM PERMANENTLY DRY AREAS SUCH AS TUNNELS, GALLERIES, BASEMENT ROOMS, ETC. USE TYPE 'C1' JOINT AT ALL OTHER CONSTRUCTION JOINTS, UNLESS OTHERWISE NOTED ON DRAWINGS.
11. CONCRETE WALLS AND PARTITIONS SHALL BE POURED IN MAXIMUM LENGTHS OF 40 FEET BETWEEN VERTICAL CONSTRUCTION JOINTS.
12. ALL CONCRETE SLABS OVER 8" IN THICKNESS, REINFORCED WITH BARS, AND POURED AGAINST SOIL SHALL BE POURED IN A STRIP PATTERN OF 40 FEET OR LESS IN EACH DIRECTION.
13. ALL EXPOSED EDGES OF BEAMS, COLUMNS, SLABS AND WALLS SHALL BE CHAMFERED 3/4" UNLESS MASONRY OR OTHER MEMBERS ARE ERECTED FLUSH WITH THEM.
14. REFER TO ARCHITECTURAL, PROCESS, MECHANICAL AND ELECTRICAL DRAWINGS FOR ALL SLEEVES, PIPES, CONDUITS AND MISCELLANEOUS ANCHORING DEVICES TO BE INCORPORATED IN THE CONSTRUCTION

STRUCTURAL STEEL

1. STRUCTURAL STEEL SHALL CONFORM TO THE LATEST AISC "SPECIFICATION FOR THE DESIGN, FABRICATION AND ERECTION OF STRUCTURAL STEEL FOR BUILDINGS". ALL STRUCTURAL STEEL SHALL BE STAINLESS STEEL TYPE 316 UNLESS OTHERWISE SPECIFIED.
2. STRUCTURAL STEEL FOR CATWALK PLATFORM AND STAIRS SHALL CONFORM TO THE LATEST AISC "SPECIFICATION FOR THE DESIGN, FABRICATION AND ERECTION OF STRUCTURAL STEEL FOR BUILDINGS". ALL STRUCTURAL STEEL SHALL BE GALV STEEL ASTM A36 UNLESS OTHERWISE SPECIFIED.
3. ELEVATIONS OF STEEL BEAMS SHOWN ON FRAMING PLANS REFER TO TOP OF FLANGE, UNLESS OTHERWISE NOTED.
4. CONTRACTOR TO PROVIDE DETAIL DRAWINGS INCLUDING CONNECTION DETAILS DURING SHOP SHOP DRAWING SUBMISSION.
5. FIELD CONNECTIONS SHALL BE BOLTED, EXCEPT AS OTHERWISE SHOWN OR NOTED.
6. ALL WELDING SHALL CONFORM TO THE LATEST SPECIFICATION OF THE AMERICAN WELDING SOCIETY. ALL WELDED CONNECTIONS SHALL BE MADE WITH AWS A5.1 OR A5.5 E70 XX ELECTRODE.
7. UNLESS OTHERWISE NOTED,
   ANCHOR BOLTS AND MISC EMBEDDED STEEL----------ASTM A36.
   ANCHOR BOLTS WHICH ARE SUBMERGED, LOCATED ABOVE A LIQUID SURFACE, OR ARE IN A CORROSIVE ATMOSPHERE----------316 SS.
8. ALL EQUIPMENT ANCHOR BOLT DIMENSIONS AND LOCATIONS SHALL BE VERIFIED FROM CERTIFIED VENDOR DRAWINGS, PRIOR TO CONSTRUCTION.

FOUNDATIONS

1. ALLOWABLE SOIL BEARING PRESSURE, EXCAVATION AND BACKFILL FOR FOUNDATIONS AND STRUCTURES SHALL BE AS RECOMMENDED IN THE GEOTECHNICAL REPORT.
2. ALL EXCAVATIONS SHALL BE CARRIED OUT IN THE DRY, AND PROVISIONS SHALL BE MADE TO PREVENT THE BOTTOM OF ALL EXCAVATIONS FROM FREEZING OR FLOODING AT ALL TIMES.
3. ALL FOUNDATIONS SHALL BE CONSTRUCTED IN EXCAVATIONS FREE OF STANDING WATER.
4. BACKFILL MATERIAL, PLACING AND COMPACTION OF BACKFILL SHALL BE IN ACCORDANCE WITH THE DRAWINGS, AND THE CONTRACT SPECIFICATIONS.

DESIGN LIVE LOADS:
POUNDS PER SQ. FT. (UON)
LIVE LOAD.....150
LIVE LOAD FOR LIFT STATION TOP SLAB.....300
SUPERIMPOSED DEAD LOAD:

FINISHES WHEREVER SHOWN ON ARCH. DRAWINGS....AS REQUIRED

LIVE LOAD REDUCTIONS:

LIVE LOAD REDUCTIONS HAVE BEEN TAKEN FOR BEAMS, GIRDERS, AND COLUMNS. THESE REDUCTIONS HAVE BEEN TAKEN ONLY AS ALLOWED BY THE BUILDING CODE.

WIND LOADS:
ULTIMATE DESIGN WIND SPEED (3–SEC.GUST) = 150 MPH
RISK CATEGORY III
EXPOSURE CATEGORY : C
FOR EXTERIOR WINDOW WALL LIMIT OUT–OF–PLANE MOVEMENT TO L/200 AND ALLOW IN–PLANE MOVEMENT OF H/400.

HANDRAIL AND GUARDRAILS ARE DESIGNED TO RESIST A LIVE LOAD OF 50 PLF APPLIED IN ANY DIRECTION AT THE TOP AND TO TRANSFER THIS LOAD THROUGH THE SUPPORTS TO THE STRUCTURE AND TO RESIST A SINGLE CONCENTRATED LOAD OF 200 LBS APPLIED IN ANY DIRECTION.

STAIR TREADS ARE DESIGNED FOR A UNIFORM LIVE LOAD OF 150 LBS

ALUMINUM

A1. STRUCTURAL ALUMINUM YIELD STRENGTHS
STRUCTURAL ALUMINUM: Fy=35 KSI
STRUCTURAL ALUMINUM IS ALLOY 6061–T6 OR 6061–T–5.

A2. DIMENSIONS:
TO CENTERLINES OF COLUMNS AND BEAMS,
TOP SURFACES OF BEAMS AND TUBES AND BACKS OF CHANNELS AND ANGLES UON.

A3. ELEVATIONS;
TOP OF ALUMINUM REFERS TO TOP SURFACE OR FLANGE OF MEMBER UON.

A4. WHEN FILLET WELD SIZE IS NOT INDICATED, PROVIDE MAXIMUM WELD SIZE FOR THE MATERIAL THICKNESS IN ACCORDANCE WITH THE LATEST EDITION OF THE "ALUMINUM DESIGN MANUAL" BY THE ALUMINUM ASSOCIATION.

A5. ALUMINUM IN CONTACT WITH DISSIMILAR MATERIALS OR CONCRETE: CONTACT SURFACES SHALL BE PROVIDED WITH GALVANIC SEPARATION PER SPECIFICATIONS.

A6. ALL ALUMINUM SHALL BE POWDER COATED DARK GREEN.

STRUCTURAL ABBREVIATIONS

ADDITIONAL	– **ADDL**
ALTERNATE	– ALT
AND	– &
ANCHOR BOLT	– AB
APPROXIMATE	– APPROX
ARCHITECTURAL	– ARCH
AT	– @
ALUMINIUM	– ALUM
BEAM	– BM
BEARING	– BRG
BELOW FINISH FLOOR	– BFF
BETWEEN	– BTWN
BOTTOM	– BOT
BOTTOM OF	– B/
BUILDING	– BLDG
CAST–IN–PLACE	– CIP
CEILING	– CLG
CENTER LINE	– CL OR ℄
CENTER TO CENTER	– C/C
CLEAR	– CLR
COLUMN	– COL
COMPRESSION	– C OR COMP
CONCRETE	– CONC
CONCRETE MASONRY UNIT	– CMU
CONNECTION (S)	– CONN(S)
CONTINUOUS	– CONT
CONSTRUCTION JOINT	– CJ
CONSTRUCTION	– CONST
DETAIL	– DET
DEAD LOAD	– DL
DEMOLITION	– DEMO
DIAGONAL	– DIAG
DIAMETER	– DIA OR ø
DIMENSION(S)	– DIM(S)
DRAWING(S)	– DWG(S)
DOUBLE	– DBL
DOWEL(S)	– DWL(S)
EACH	– EA
EACH FACE	– EF
EACH WAY	– EW
ELECTRICAL	– ELEC
ELEVATION	– EL
EMBEDMENT	– EMBED
EQUAL	– EQ
EXPANSION JOINT	– EJ
EXPANSION	– EXP
EXISTING	– EXIST OR EX
EXTERIOR	– EXT
FACE TO FACE	– F TO F
FAR SIDE	– FS
FINISHED FLOOR	– FF
FOUNDATION	– FDN
FOOTING	– FTG
FEET	– FT
GAGE OR GUAGE	– GA
GALVANIZED	– GALV
HEIGHT	– HT
HORIZONTAL	– HORIZ
HIGH POINT	– H.P.
INFORMATION	– INFO
INSIDE DIAMETER	– ID
INSIDE FACE	– IF
INTERIOR	– INT
INTERMEDIATE	– INTERM
ISOLATION JOINT	– IJ
JOINT	– JT
JOIST(S)	– JSY(S)
LOW POINT	– L.P.
LIVE LOAD	– LL
LONG	– LG
LONGITUDINAL	– LONG
MANHOLE	– MH
MAXIMUM	– MAX
MINIMUM	– MIN
MISCELLANEOUS	– MISC
MANUFACTURER	– MFR
NEAR SIDE	– NS
NOMINAL	– NOM
NUMBER	– NO OR # OR NOS
ON CENTER	– OC
OPENING(S)	– OPNG(S)
OPPOSITE	– OPP
OPPOSITE HAND	– OH
OUTSIDE FACE	– OF
OUTSIDE DIAMETER	– OD
OVERALL	– OA
POLYVINYL CHLORIDE	– PVC
REINFORCEMENT	– REINF.
RADIUS	– R
REINFORCED CONCRETE PIPE	– RCP
REQUIRED	– REQ'D
ROOF DRAIN	– RD

SCHEDULE(D)	_ SCHED
SECTION	_ SECT
SHEET	_ SHT
SIMILAR	_ SIM
SPACE	_ SP
SPECIFICATION(S)	_ SPEC(S)
SQUARE FOOT (FEET)	_ SF
STAINLESS STEEL	_ SS
STANDARD	_ STD
STEEL	_ STL
STRAIGHT	_ STRA
STIRRUPS	_ STIR
STRUCTURAL	_ STRUCT'L
SYMMETRICAL	_ SYMM
TOP	_ TP
TOP OF	_ T/
THICK	_ THK
TOUNGE AND GROOVE	_ T&G
TOP AND BOTTOM	_ T&B
TOP OF BEAM	_ TOB
TOP OF FOOTING	_ TOF
TOP OF PIER	_ TOP
TOP OF SLAB	_ TOS
TOP OF WALL	_ TOW
TYPICAL	_ TYP
UNLESS OTHERWISE NOTED	_ UON
VERTICAL	_ VERT
VARIES	_ VAR
WELDED WIRE FABRIC	_ WWF
WITH	_ W/

NO.	DATE	REVISION	APP.
01	01/16/26	95% SUBMITTAL	TH

ARCADIS
Infrastructure · Water · Environment · Buildings
1330 Post Oak Blvd, Suite 2250
Houston, TX 77056
Tel: 713–953–4800
Fax: 713–977–4620
www.arcadis.com
Texas Registered Engineering Firm F–533

SURVEYED BY: AMANI ENGR.
FB NO. P–6335

STATE OF TEXAS
TANVIR HOSSAIN
121767
LICENSED PROFESSIONAL ENGINEER

CITY OF HOUSTON
HOUSTON PUBLIC WORKS

LIFT STATION REHABILITATION & RECONSTRUCTION
CONSENT DECREE

STRUCTURAL NOTES

G–8

WBS NUMBER	FOR CITY OF HOUSTON USE ONLY
R–000267–0175–4	
DRAWING SCALE	
AS NOTED	
CITY OF HOUSTON PM	
NP NAWARAJ PANTA, P.E.	
SHEET NO. 8 OF 312	

ELECTRICAL GENERAL NOTES

1. THE NOTES CONTAINED ON THIS SHEET ARE PROVIDED FOR THE CONVENIENCE OF THE CONTRACTOR WHEN WORKING IN THE FIELD, AND CONTAIN EXCERPTS FROM THE SPECIFICATION SECTIONS. HOWEVER THE CONTRACTOR IS HEREBY ADVISED THAT THE CONTRACT DOCUMENTS CONSIST OF BOTH THE DRAWINGS AND THE SPECIFICATIONS, AND THAT THE CONTRACTOR MUST COMPLY FULLY WITH BOTH THE BOUND DRAWINGS AND THE BOUND SPECIFICATIONS.

2. ALL EQUIPMENT WIRING, RACEWAYS, ETC. SHALL BE INSTALLED AND GROUNDED IN ACCORDANCE WITH THE LATEST EDITION OF THE NATIONAL ELECTRICAL CODE, LOCAL CODES, AND INDUSTRY STANDARDS (IE. UL, NEMA, IEEE, ANSI, ETC.) THE DRAWING NOTES AND DETAILS SHALL BE COMPLIED WITH IN ADDITION TO THE REQUIREMENTS IN THE SPECIFICATIONS. REFER TO EACH SPECIFICATION SECTION FOR SPECIFIC REQUIREMENTS.

3. ALL RACEWAY INSTALLATIONS SHALL BE INSTALLED IN A MANNER TO PREVENT CONFLICTS WITH EQUIPMENT AND STRUCTURAL CONDITIONS. ALL EXPOSED RACEWAY SHALL BE INSTALLED PARALLEL TO BEAMS, CEILINGS, FLOORS AND WALLS. SEE SPECIFICATION ON RACEWAYS FOR ADDITIONAL REQUIREMENTS.

4. CONDUITS SHALL BE TERMINATED IN A NEAT MANNER AND STRICTLY IN ACCORDANCE WITH THE SPECIFICATIONS AND DRAWING DETAILS.

5. CONDUITS TERMINATED INTO ENCLOSURES SHALL BE PERPENDICULAR TO THE WALLS OF THE ENCLOSURE. THE USE OF SHORT SEALTIGHT ELBOW FITTINGS FOR SUCH TERMINATIONS IS NOT PERMITTED.

6. ALL RACEWAY INSTALLATIONS, CROSSING EXPANSION JOINTS OR TRANSITIONS FROM BELOW GRADE TO EXPOSED ABOVE GRADE, SHALL HAVE EXPANSION OR EXPANSION/DEFLECTION TYPE FITTINGS AS SPECIFIED FOR THE APPLICATION. SEE THE DRAWINGS AND THE SPECIFICATION ON RACEWAYS FOR THE EXACT TYPE OF FITTING TO BE USED.

7. NO CONDUIT SMALLER THAN 3/4", NOR WIRE SMALLER THAN NO. 12 AWG, SHALL BE USED UNLESS SPECIFICALLY NOTED.

8. ALL UNDERGROUND SINGLE CONDUITS AND DUCTBANKS OF MULTIPLE CONDUITS SHALL BE RIGID PVC CONDUIT ENCASED IN REINFORCED RED CONCRETE. CONCRETE DYED RED BEFORE PLACEMENT. MINIMUM SIZE IS 2 INCH. FIELD VERIFY THE ROUTING OF ALL EXISTING UNDERGROUND CONDUIT AND DUCTBANKS. COORDINATE ROUTING OF NEW CONDUIT AND DUCTBANKS TO AVOID INTERFERENCE WITH EXISTING CONDUIT, DUCTBANKS, AND OTHER UNDERGROUND UTILITIES.

9. ALL CHANGES OF DIRECTION GREATER THAN 20 DEGREES IN UNDERGROUND SINGLE, OR DUCTBANKS OF MULTIPLE CONDUITS, SHALL BE ACCOMPLISHED USING PVC COATED RIGID ALUMINUM LONG RADIUS BENDS. BENDS OF PVC CONDUIT GREATER THAN 20 DEGREES, OR THE USE OF FLEXIBLE CONDUIT OF ANY TYPE, WILL NOT BE PERMITTED. SEE THE SPECIFICATIONS FOR MORE REQUIREMENTS.

10. LIQUID TIGHT FLEXIBLE ALUMINUM CONDUIT SHALL BE USED FOR THE PRIMARY AND SECONDARY OF TRANSFORMERS, GENERATOR TERMINATIONS AND OTHER EQUIPMENT WHERE VIBRATION IS PRESENT. USE IN OTHER LOCATIONS IS NOT PERMITTED, EXCEPT FOR CONNECTIONS TO INSTRUMENTATION TRANSMITTERS, WHERE MULTIPLE PENETRATIONS ARE REQUIRED. LIQUID TIGHT FLEXIBLE ALUMINUM CONDUIT SHALL HAVE A MAXIMUM LENGTH NOT GREATER THAN THAT OF A FACTORY MANUFACTURED LONG RADIUS ELBOW OF THE CONDUIT SIZE BEING USED. THE MAXIMUM BENDING RADIUS SHALL NOT BE LESS THAN THAT SHOWN IN THE NEC CHAPTER 9, TABLE 2, "OTHER BENDS". BX OR AC TYPE PREFABRICATED CABLES WILL NOT BE PERMITTED.

11. THE WIRING DIAGRAMS, BLOCK DIAGRAMS, QUANTITY/SIZES OF WIRES/CONDUITS REPRESENT A SUGGESTED ARRANGEMENT BASED UPON SELECTED STANDARD COMPONENTS OF ELECTRICAL EQUIPMENT. MODIFICATIONS ACCEPTABLE TO THE ENGINEER MAY BE MADE BY THE CONTRACTOR TO ACCOMMODATE EQUIPMENT ACTUALLY APPROVED. ALL MODIFICATIONS SHALL BE SUBMITTED TO THE ENGINEER FOR APPROVAL. THE BASIC SEQUENCE AND METHOD OF CONTROL MUST BE MAINTAINED AS INDICATED ON THE DRAWINGS AND/OR SPECIFIED.

12. ALL JUNCTION BOXES, PULL BOXES AND TERMINATION BOXES IN NEMA 12 AREAS SHALL BE ALUMINUM. FOR NEMA 4X AREAS SEE SPECIFICATIONS FOR BOX DETAILS AND SPECIFICATIONS.

13. SEAL ALL RACEWAYS ENTERING JUNCTION BOXES OR CONTROL PANELS CONTAINING ELECTRICAL OR INSTRUMENTATION EQUIPMENT WITH WATERTIGHT SEALANT. REFER TO THE SPECIFICATIONS FOR DETAILS.

14. ALL EQUIPMENT AND ELECTRICAL EQUIPMENT ENCLOSURE LOCATIONS, OR TERMINAL BOX LOCATIONS, ARE APPROXIMATE. THE EXACT LOCATIONS SHALL BE COORDINATED WITH AND APPROVED BY THE OWNER/ENGINEER, DURING CONSTRUCTION, AT NO ADDITIONAL COST TO THE OWNER.

15. ALL EQUIPMENT AND ELECTRICAL EQUIPMENT ENCLOSURES DIMENSIONS ARE APPROXIMATE. ALL EQUIPMENT AND ELECTRICAL EQUIPMENT ENCLOSURES OR TERMINAL BOX DIMENSIONS SHALL BE VERIFIED WITH THE EQUIPMENT SUPPLIER. ALLOW FOR LOCATION CHANGES AND INCLUDE IN THE CONTRACT PRICE. THE EXACT LOCATIONS OF ALL ELECTRICAL EQUIPMENT AND ROUTING OF ALL CABLES AND CONDUITS SHALL BE COORDINATED WITH AND APPROVED BY THE OWNER/ENGINEER DURING CONSTRUCTION.

16. CORING OF AN EXISTING STRUCTURE SHALL BE COORDINATED WITH AND APPROVED BY THE OWNER/ENGINEER. CORING THROUGH STRUCTURAL BEAMS IS STRICTLY PROHIBITED WITHOUT PRIOR WRITTEN APPROVAL FROM THE OWNER/ENGINEER.

17. THE LOCATION OF ALL ELECTRICAL EQUIPMENT AND ROUTING OF CABLES AND CONDUITS SHALL BE COORDINATED AND APPROVED BY THE OWNER.

18. THE DUCTBANK ROUTING AS SHOWN ON THE DRAWING IS APPROXIMATE. FIELD VERIFY THE EXACT DUCTBANK ROUTING, CABLE LENGTH AND CONDUIT LENGTH.

19. PROVIDE CONDUIT SEALS FOR CONDUIT PENETRATIONS AS PER NEC AND NFPA820.

20. COORDINATE ALL WORK WITH THE OWNER.

21. LOCATE ALL UNDERGROUND UTILITIES BEFORE DIGGING. COORDINATE THE EFFORT WITH THE OWNER.

22. ALL SLOTTED CHANNEL, SLOTTED CHANNEL SUPPORT MATERIAL, WASHERS, SCREWS, NUTS, CONDUIT CLAMPS, ALL THREAD SPRING NUTS AND MISC. MOUNTING HARDWARE SHALL BE 316 STAINLESS STEEL.

23. LIGHTING FIXTURES SHALL BE MOUNTED ACCORDING TO THE MOUNTING HEIGHT GIVEN ON THE DRAWINGS. THE MOUNTING HEIGHT SHALL BE MEASURED FROM THE BOTTOM OF THE LIGHTING FIXTURE TO THE FINISHED FLOOR.

24. CONDUIT AND WIRE FOR THE HVAC EQUIPMENT AND MISCELLANEOUS DEVICES SHALL BE:

    A. 3/4" (MIN) RIGID ALUMINUM.

    B. NO.14 XHHW CU. WIRE XHHW (MIN.).

    C. IN ACCORDANCE WITH ALL ELECTRICAL AND HVAC SPECIFICATIONS REQUIREMENTS.

25. CONDUITS AND WIRES SHOWN ON THE INTERFACE DIAGRAM SHALL BE INSTALLED BY THE CONTRACTOR. GROUPING OF CONDUIT AND WIRE MAY BE CHANGED, IF APPROVED BY THE ENGINEER AND OWNER.

26. ALL CONDULETS SHALL BE FORM 7 AND SHALL HAVE 316 SS CLAMP COVERS WITH 316 SS CLAMPS AND SCREWS. SCREW DOWN COVERS ARE UNACCEPTABLE. REFER TO THE SPECIFICATIONS FOR MORE INFORMATION.

27. ALL BARE COPPER GROUNDING CONDUCTORS SHALL BE TINNED, ALL GROUND RODS SHALL BE 3/4" BY 10' LONG. ALL EXPOSED COPPER GROUND CABLES SHALL BE GREEN INSULATED CONDUCTORS. PROVIDE XHHW INSULATION.

28. WHERE NOTES ON THE DRAWING INDICATE THAT THE CONTRACTOR SHALL FIELD-VERIFY, THE INTENT IS FOR THE CONTRACTOR TO INVESTIGATE TO THE EXTENT NECESSARY TO PROVIDE THE WORK AND MATERIALS PRIOR TO BIDDING AND INCLUDE ALL COSTS IN THE BID PRICE. THE CONTRACT PRICE SHALL NOT BE INCREASED WHEN THE CONTRACTOR HAS NOT INVESTIGATED PER THE NOTES DIRECTING THAT BE DONE.

TYPICAL ENCLOSURE TYPES BY AREA TYPE

NON-HAZARDOUS AREAS	BOXES & ENCLOSURES 1	3R	4X	4X*	12	CONDUIT
OUTDOOR; GENERAL AREAS		X	X			PVC COATED ALUMINUM
OUTDOOR; CHEMICAL AREAS				X		SCHEDULE 80 PVC
INDOOR; CHEMICAL ROOM				X		SCHEDULE 80 PVC
INDOOR; CONDITIONED SPACE					X	RIGID ALUMINUM
INDOOR; NON-CONDITIONED SHOP SPACE					X	RIGID ALUMINUM
INDOOR; NON-CONDITIONED PROCESS AREA			X			RIGID ALUMINUM
INDOOR, ADMIN BUILDING	X					EMT/RIGID ALUMINUM
CLASS I, DIVISION 1	REFER TO NEC, NFPA-820, AND CONTRACT CONSTRUCTION SPECIFICATIONS					
CLASS I, DIVISION 2	REFER TO NEC, NFPA-820, AND CONTRACT CONSTRUCTION SPECIFICATIONS					

GENERAL NOTES:

- EQUIPMENT SUCH AS MOTOR CONTROL CENTER, SWITCHGEAR, VFDS, AND OTHER STAND-ALONE MOTOR STARTERS ARE TO BE SPECIFIED UNIQUELY.
- NEMA 1 ENCLOSURES ARE TO BE NEMA 1 GASKETED.
- NEMA 4X* ENCLOSURES ARE TO BE NON-METALLIC (ie PVC) NEMA 4X
- CONDUIT INSIDE ADMIN BUILDING LOCATION IS TO BE EMT IF CONCEALED IN DRY WALL (AKA SHEET ROCK WALL): OTHERWISE RIGID ALUMINUM.
- OUTDOOR GENERAL AREAS COULD BE 3R OR 4X DEPENDING ON OWNER PREFERENCE AND WHETHER WTP OR WWTP - REFER TO DRAWINGS.

CONDUIT TYPE	LOCATION
RIGID GALVANIZED CONDUIT	NOT ACCEPTABLE FOR USE ON THIS PROJECT EXCEPT FOR THE UTILITY COMPANY'S CONDUCTORS. ALL UTILITY COMPANY'S DUCTS SHALL BE AS SPECIFIED BY UTILITY COMPANY.
PVC COATED ALUMINUM CONDUIT	ALL EMBEDDED CONDUIT BENDS, UNDERGROUND DUCTBANK OF MORE THAN 20 DEGREES, AND ALL CONDUIT STUB-UPS TO A MINIMUM OF 6" ABOVE FINISHED FLOOR OR GRADE AND IN CHLORINE AND CAUSTIC ROOMS.
LIQUID TIGHT FLEXIBLE ALUMINUM CONDUIT	RACEWAY CONNECTION TO VIBRATING EQUIPMENT ONLY, IN ALL AREAS.
RIGID NON-METALLIC, SCHEDULE 40 PVC CONDUIT	UNDERGROUND ENCASED IN RED DYE REINFORCED CONCRETE. (AS WHERE SPECIFIED)
RIGID NON-METALLIC, SCHEDULE 80 PVC CONDUIT	FOR USE IN CHLORINE AND CAUSTIC ROOMS, AND UNDERGROUND. ENCASED IN RED DYED REINFORCED CONCRETE. (AS WHERE SPECIFIED)
FLEXIBLE ALUMINUM CONDUIT	FIXTURE WHIP CONNECTION TO LIGHTING FIXTURES IN NEMA 12 AREAS (MAXIMUM 3-FT). BX OR AC TYPE PREFABRICATED CABLES ARE NOT PERMITTED.
ALUMINUM RIGID METAL CONDUIT	ALL ABOVE GRADE AREAS, EXCEPT FOR CONCRETE EMBEDDED AND THOSE AREAS ALREADY DESCRIBED IN THIS TABLE
ELECTRIC METALLIC TUBING (EMT) CONDUIT	FOR USE ONLY ON CONCEALED, ABOVE GROUND, INTERIOR ELECTRICAL WIRING IN AIR-CONDITIONED ADMINISTRATIVE BUILDINGS REMOTE TO THE PROCESS AREA, AND CLEARLY DEFINED AS SUCH ON THE DRAWINGS OR IN THE SPECIFICATIONS.

ELECTRICAL DEMOLITION NOTES

1. COORDINATE THE DEMOLITION OF ELECTRICAL CONDUIT, WIRE, EQUIPMENT AND DEVICES WITH THE GENERAL DEMOLITION AND SCHEDULE. THE DRAWINGS ARE INTENDED TO CONVEY THE GENERAL NATURE AND SCOPE OF THE DEMOLITION WORK. EVERY ITEM TO BE DEMOLISHED MAY NOT BE SHOWN. FIELD VERIFY, AND INCLUDE ALL DEMOLITION WORK IN THE CONTRACT PRICE.

2. PROVIDE TEMPORARY WIRE AND CONDUIT FOR THE EQUIPMENT WHICH MAY BE AFFECTED BY THE DEMOLITION BUT TO REMAIN IN SERVICE.

3. RELOCATE AND RECONNECT POWER AND CONTROL RACEWAYS AND CONDUCTORS TO EQUIPMENT AFFECTED BY DEMOLITION WORK.

4. ALL CONDUCTORS BEING DEMOLISHED SHALL BE DISCONNECTED AND REMOVED FROM THE LOAD TO THE SOURCE. SURFACE MOUNTED CONDUITS AND MOUNTING HARDWARE SHALL BE REMOVED. UNDERGROUND CONDUITS WHICH ARE NOT BEING REMOVED OR OTHERWISE NOT BEING MADE UNUSABLE SHALL BE CAPPED AND TAGGED AS SPARE, WITH INFORMATION CLEARLY INDICATING THE LOCATION OF THE OTHER END.

5. ALL SURFACES WHERE DEMOLISHED EQUIPMENT OR CONDUIT IS REMOVED SHALL BE CLEANED, PATCHED AND PAINTED TO MATCH THE SURROUNDING SURFACE.

6. CHECK THE FUNCTION OF EACH CONDUCTOR BEFORE REMOVING OR DISCONNECTING.

7. IF A CONDUCTOR WHICH HAS TO STAY IN SERVICE (NOT BEING DEMOLISHED) IS INSTALLED IN A COMMON CONDUIT WITH CONDUCTORS WHICH ARE BEING DEMOLISHED, THE CONTRACTOR SHALL REMOVE ALL CONDUCTORS FROM THE CONDUIT, PROVIDE NEW CONDUCTORS WHICH ARE REPLACEMENTS FOR THE CONDUCTORS THAT ARE TO REMAIN IN SERVICE AND RE-INSTALL THE NEW CONDUCTORS. AFTER THE CONDUCTORS ARE PULLED, MEGGER OR VFL TEST EACH CONDUCTOR. CONNECT BOTH ENDS OF THE NEW CONDUCTORS AND TEST THE SYSTEM FOR PROPER FUNCTION. DO NOT RE-PULL USED CONDUCTORS UNLESS SPECIFIED.

8. WHERE EQUIPMENT IS BEING RE-FED FROM A NEW SOURCE, EXISTING CONDUIT MAY BE REUSED ONLY IF THE CONDUIT AND FITTINGS ARE OF THE TYPE SPECIFIED FOR NEW WORK ON THIS CONTRACT. IF NOT, THE CONDUIT AND CONDUCTORS SHALL BE REPLACED WITH NEW MATERIAL MEETING THE SPECIFICATIONS, AT NO ADDITIONAL COST TO THE OWNER.

9. THE CONTRACTOR SHALL COORDINATE WITH THE OWNER/ENGINEER TO FLAG EXISTING UNDERGROUND CONDUITS BEFORE DIGGING.

10. THE OWNER HAS THE RIGHT OF FIRST REFUSAL TO THE EQUIPMENT BEING REMOVED. THE CONTRACTOR SHALL DELIVER THE EQUIPMENT WHICH THE OWNER WISHES TO KEEP AT A LOCATION DESIGNATED BY THE OWNER. SEE SPECIFICATIONS.

11. DO NOT MAKE ANY MODIFICATIONS TO THE EXISTING ELECTRICAL EQUIPMENT UNTIL THE FOLLOWING HAS BEEN DONE:

    A. THE OWNER/CONTRACTOR SHALL WITNESS AND RECORD THE CONDITION OF THE EXISTING EQUIPMENT, THE CONTRACTOR SHALL NOTE DOWN ANY DEFECTS OR DEFICIENCIES.

    B. THE OWNER SHALL OPERATE THE EQUIPMENT TO DEMONSTRATE THE CURRENT CONDITIONS. THE CONTRACTOR SHALL NOTE DOWN ANY DEFECTS OR DEFICIENCIES.

    C. A WRITTEN AND PHOTOGRAPHIC RECORD OF THE OPERATION AND EXISTING CONDITION SHALL BE KEPT IN A THREE RING BINDER AT THE OWNER/CONTRACTOR TRAILER, IN FORM OF PICTURES AND INFORMATION.

    D. A FORM SHALL BE GENERATED BY THE CONTRACTOR TO RECORD THE OBSERVATIONS. BOTH PARTIES SHALL SIGN ON THE FORM.

    E. REPLACE ALL MATERIAL OR EQUIPMENT DAMAGED DURING THE COURSE OF WORK.

    F. AFTER THE CHANGES ARE MADE, THE EQUIPMENT SHALL BE INSPECTED AND RE-TESTED TO DEMONSTRATE THAT IT FUNCTIONS CORRECTLY.

    G. NO PORTION OF EXISTING CONDUCTORS SHALL BE SPLICED TO NEW CONDUCTORS FOR RE-USE WITHOUT SPECIFIC APPROVAL FROM THE OWNER/ENGINEER ON A CASE-BY-CASE BASIS.

MCC, CONTROL PANELS, PANELBOARDS

THESE NOTES APPLY TO CONTROL PANELS, MCC ETC WHICH HAS TO BE REFURBISHED, MODIFIED, DISCONNECTED & RECONNECTED OR REWORKED. SEE SECTION 16060:

THE CONTRACTOR SHALL NOT MAKE ANY MODIFICATION UNTIL THE FOLLOWING HAS BEEN DONE:

A. THE OWNER/CONTRACTOR SHALL WITNESS THE CONDITION OF THE EXISTING EQUIPMENT, THE CONTRACTOR SHALL NOTE DOWN ANY DEFECTS OR DEFICIENCY.

B. THE OWNER SHALL OPERATE THE EQUIPMENT TO DEMONSTRATE THE CURRENT CONDITIONS. THE CONTRACTOR SHALL NOTE DOWN ANY DEFECTS OR DEFICIENCIES.

C. A RECORD OF THE OPERATION AND EXISTING CONDITION SHALL BE KEPT IN A THREE RING BINDER AT THE OWNER/CONTRACTOR TRAILER, IN FORM OF PICTURES AND INFORMATION.

D. A FORM SHALL BE GENERATED BY THE CONTRACTOR TO RECORD THE OBSERVATIONS. BOTH PARTIES SHALL SIGN ON THE FORM.

E. REPLACE ALL MATERIAL OR EQUIPMENT DAMAGED DURING THE COURSE OF WORK.

F. AFTER THE CHANGES ARE MADE, THE EQUIPMENT SHALL BE INSPECTED AND RE-TESTED TO DEMONSTRATE THAT IT FUNCTIONS CORRECTLY.

NO.	DATE	REVISION	APP.

GAI
Gupta & Associates, Inc.
CONSULTING ENGINEERING
Registration No. F-2593
302 Dennis St.,
Houston, Texas 77006
Tel: 713-636-2936
Fax: 713-636-2987
email: hforouzan@gaiconsulting.com

ARCADIS
Infrastructure · Water · Environment · Buildings
1330 Post Oak Blvd, Suite 2250
Houston, TX 77056
Tel: 713-953-4800
Fax: 713-977-4620
www.arcadis.com
Texas Registered Engineering Firm F-533
SURVEYED BY: AMANI ENGR.
FB NO. P-6335

STATE OF TEXAS · H. A. FOROUZAN · 77748 · REGISTERED PROFESSIONAL ENGINEER
11/18/2025

CITY OF HOUSTON
HOUSTON PUBLIC WORKS

LIFT STATION REHABILITATION & RECONSTRUCTION CONSENT DECREE

ELECTRICAL GENERAL NOTES

G-9

WBS NUMBER	FOR CITY OF HOUSTON USE ONLY
R-000267-0175-4	
DRAWING SCALE	
NONE	
CITY OF HOUSTON PM	
NP NAWARAJ PANTA, P.E.	
SHEET NO. 9 OF 312	

FILE PATH: O:\H8103_Houston Lift Station Removal And Replacement (CMAR)\6 Drawings\Electrical\Working\Electrical General\H8103_G-09.dwg
PLOT STYLE: COH.ctb PLOTTED: 11/18/2025 6:51 PM

SYMBOLS	DESCRIPTION
52 CS	MEDIUM VOLTAGE DRAWOUT TYPE POWER CIRCUIT BREAKER CS-CONTROL SWITCH
(E.O.) FRAME TRIP	LOW VOLTAGE CIRCUIT BREAKER, 3 POLE UNLESS OTHERWISE NOTED. LSIG IF NOTED MCP IF NOTED ERMS IF NOTED
✳ OR	COMBINATION MOTOR CIRCUIT PROTECTOR AND MAGNETIC MOTOR STARTER, FULL VOLTAGE NON-REVERSING UNLESS OTHERWISE NOTED: ✳ FVR-FULL VOLTAGE REVERSING RVNR-REDUCED VOLTAGE NON-REVERSING 2S1W-TWO SPEED, ONE WINDING 2S2W-TWO SPEED, TWO WINDING
✳ OR	NON-FUSIBLE DISCONNECT SWITCH, 600 VOLT, 3 POLE ✳ AMPERE RATING NOTED IF OTHER THAN 30A
✳ ✱ OR F	FUSIBLE DISCONNECT SWITCH, 600 VOLT, 3 POLE, AMPERE RATING AND FUSE SIZE AS NOTED: ✳ AMPERE RATING NOTED IF OTHER THAN 30A ✱ FUSE RATING
MIS OR I	MOTOR ISOLATION SWITCH, HORSEPOWER RATED
	DRAWOUT TYPE EQUIPMENT OR DEVICE
	MEDIUM VOLTAGE CABLE TERMINATION
	MEDIUM VOLTAGE AIR INTERRUPTER SWITCH
	MEDIUM VOLTAGE FUSED AIR INTERRUPTER SWITCH
	MEDIUM VOLTAGE FUSED MOTOR CONTROLLER
30KVA 480V- 120/208Y K-*	TRANSFORMER, RATINGS AND CONNECTIONS AS NOTED. UNLESS OTHERWISE NOTED ON THE SINGLE LINE DIAGRAMS ALL DRY TYPE TRANSFORMERS SERVICING ADMINISTRATIVE AND LABORATORY SPACES SHALL HAVE A K FACTOR OF 13. ALL OTHER DRY TYPE TRANSFORMERS SHALL HAVE A K-4 RATING. ISOLATION TRANSFORMERS SHALL HAVE A K-20 RATING
✳ A:5	CURRENT TRANSFORMER: ✳ QUANTITY A= PRIMARY AMPERES
✳ PV-SV	POTENTIAL TRANSFORMER: ✳ QUANTITY PV= PRIMARY VOLTAGE SV= SECONDARY VOLTAGE
	GENERATOR, RATINGS AND CONNECTIONS AS NOTED
100A ATS-1 N S	TRANSFER SWITCH AUTOMATIC TRANSFER SWITCH (EG ATS-1) MANUAL TRANSFER SWITCH (EG MTS-1) "N" INDICATES NORMAL SOURCE "S" INDICATES STANDBY SOURCE 100A INDICATES CONTINUOUS CURRENT RATING
✳	VARIABLE SPEED DRIVE CONTROLLER ✳ D.C.= D.C. DRIVE CONTROLLER SCR= SILICON CONTROLLED RECTIFIER VFD= VARIABLE FREQUENCY DRIVE AFD= ADJUSTABLE FREQUENCY DRIVE
	VACUUM CONTACTOR
5KW OR E	UNIT HEATER - ELECTRIC HEATING COIL AND FAN
5KW OR U	UNIT HEATER - STEAM OR WATER HEATING COIL AND FAN
M	MOTOR, NUMERAL INDICATES HORSEPOWER
SPD	SURGE PROTECTION DEVICE
VFD	VARIABLE FREQUENCY DRIVE

SYMBOLS	DESCRIPTION
VM ✳	VOLTMETER (WITH SWITCH IF 3-PHASE)
AM ✳	AMMETER (WITH SWITCH IF 3-PHASE)
*	METER ✳ WM- WATTMETER WHM- WATTHOUR METER WHDM- WATTHOUR DEMAND METER WHDR- WATTHOUR DEMAND RECORDER PF- POWER FACTOR METER RT- RUNNING TIME METER TRANSDUCER AX- CURRENT TRANSDUCER WX- WATT TRANSDUCER
#	RELAY, NO. AS INDICATED 25- SYNCHRONISM CHECK RELAY 27- UNDER VOLTAGE RELAY 38- BEARING PROTECTIVE DEVICE 40- LOSS OF EXCITATION RELAY 42- RUNNING CONTACTOR/PILOT RELAY 46- REVERSE PHASE/PHASE BALANCE/CURRENT RELAY 47- PHASE SEQUENCE VOLTAGE RELAY 49- MACHINE OR TRANSFORMER THERMAL RELAY 50- INSTANTANEOUS OVERCURRENT RELAY 50G- INSTANTANEOUS GROUND 51- TIME OVER CURRENT RELAY 51G- TIME OVERCURRENT RELAY, GROUNDING RESISTOR TYPE 51N- TIME OVERCURRENT RELAY, RESIDUAL TYPE 51V- TIME OVERCURRENT RELAY WITH VOLTAGE RESTRAINT 60- NEGATIVE SEQUENCE VOLTAGE RELAY 62- TIME DELAY RELAY 63- OVER PRESSURE RELAY 67- AC DIRECTIONAL OVERCURRENT RELAY 83- AUTOMATIC SELECTIVE CONTROL OR TRANSFER RELAY 86- LOCKING-OUT RELAY 87- DIFFERENTIAL PROTECTIVE RELAY B- SUFFIX INDICATES "BUS" G- SUFFIX INDICATES "GENERATOR" GF- GROUND FAULT ST- SHUNT TRIP T- SUFFIX INDICATES "TRANSFORMER" X- SUFFIX INDICATES "AUXILIARY"
*	SPECIAL CAPACITOR ✳ SC- SURGE CAPACITOR PF- POWER FACTOR CORRECTION CAPACITOR INCLUDING INDUCTIVE LINK AS NEEDED
	PUSH BUTTON, MOMENTARY CONTACT, SPRING RETURN, NORMALLY CLOSED
	PUSH BUTTON, MOMENTARY CONTACT, SPRING RETURN, NORMALLY OPEN
E-STOP	EMERGENCY STOP PUSH BUTTON WITH RED MUSHROOM HEAD OPERATOR (MAINTAINED CONTACT)
✳ N	STOP PUSH BUTTON WITH RED HEAD OPERATOR (MAINTAINED CONTACT) WITH LOCKABLE OPTION ✳: E-STOP ✳: STOP
STOP START	START-STOP PUSH BUTTON CONTROL STATION (MOMENTARY CONTACT) "L" DENOTES LOCKOUT TYPE
STOP START	START-STOP PUSH BUTTON CONTROL STATION, MAINTAINED CONTACT WITH LOCKOUT DEVICE ON STOP
OFF ON	OFF/ON SELECTOR SWITCH
A B C ✳ (XOO) (OOX)	3 POSITION SELECTOR SWITCH, MAINTAINED CONTACT O-OPEN X-CLOSED

POSITION	TOP CONTACT	MIDDLE CONTACT	BOTTOM CONTACT
A	X	O	O
B	0	0	O
C	0	O	X

✳ NAMEPLATE (A/B/C)
HOA- HAND/OFF/AUTO
HOR- HAND/OFF/REMOTE
LOR- LOCAL/OFF/REMOTE
RSL- RAISE/STOP/LOWER
TOA- TEST/OFF/AUTO

NOTE: 2 POSITION MULTI-CONTACT SWITCH FOLLOWS SAME CONVENTION

M #	MOTOR STARTER COIL, NUMBER AS INDICATED
CR #	CONTROL RELAY COIL, NUMBER AS INDICATED
	RVSS: REDUCED VOLTAGE STATIC SOLID SOFT STARTER

SYMBOLS	DESCRIPTION
*	PILOT LIGHT, COLOR AS NOTED ✳ R- RED G- GREEN B- BLUE W- WHITE A- AMBER
* PTT	PILOT LIGHT, PUSH-TO-TEST TYPE, COLOR AS NOTED ABOVE.
TD	TIME DELAY RELAY RANGE AS NOTED SET POINT AS NOTED TDD-TIME DELAY AFTER DE-ENERGIZATION-OFF DELAY TDE-TIME DELAY AFTER ENERGIZATION-ON DELAY
	NOTC-NORMALLY OPEN, TIMED CLOSING WHEN ENERGIZED
	NCTO-NORMALLY CLOSED, TIMED OPENING WHEN ENERGIZED
	NOTO-NORMALLY OPEN, TIMED OPENING WHEN DE-ENERGIZED
	NCTC-NORMALLY CLOSED, TIMED CLOSING WHEN DE-ENERGIZED
⊗	FIELD INSTRUMENT, TAG NO. OR LOOP # AS INDICATED ✳INDICATES INSTRUMENT TYPE DEFINED ON LOOP SHEETS ## - INDICATES LOOP NO.
OR ⊗	LIQUID LEVEL (FLOAT) SWITCH NORMALLY OPEN, CLOSES ON RISING LEVEL NORMALLY CLOSED, OPENS ON RISING LEVEL NORMALLY OPEN, CLOSES ON DROPPING LEVEL NORMALLY CLOSED, OPENS ON DROPPING LEVEL
OR ⊗	PRESSURE OR VACUUM SWITCH NORMALLY OPEN, CLOSES ON RISING PRESSURE NORMALLY CLOSED, OPENS ON RISING PRESSURE NORMALLY OPEN, CLOSES ON DROPPING PRESSURE NORMALLY CLOSED, OPENS ON DROPPING PRESSURE
OR ⊗	TEMPERATURE SWITCH OR THERMOSTAT NORMALLY OPEN, CLOSES ON RISING TEMPERATURE NORMALLY CLOSED, OPENS ON RISING TEMPERATURE NORMALLY OPEN, CLOSES ON DROPPING TEMPERATURE NORMALLY CLOSED, OPENS ON DROPPING TEMPERATURE
OR ⊗	FLOW SWITCH (AIR, WATER, ETC.) NORMALLY OPEN, CLOSES ON INCREASED FLOW NORMALLY OPEN, CLOSES ON DROPPING FLOW NORMALLY CLOSED, OPENS ON INCREASED FLOW NORMALLY CLOSED, OPENS ON DROPPING FLOW
OR ⊗	POSITION (LIMIT) SWITCH NORMALLY OPEN NORMALLY OPEN - HELD CLOSED NORMALLY CLOSED NORMALLY CLOSED - HELD OPEN
OR ⊗	TORQUE SWITCH NORMALLY CLOSED, OPENS ON HIGH TORQUE
	CONDUCTORS OR CONDUITS CROSSING PATHS BUT NOT CONNECTED
	CONDUCTORS ELECTRICALLY CONNECTED
FAN	SUPPLY/EXHAUST FAN

SYMBOLS	DESCRIPTION
LA SC	LIGHTNING ARRESTER/SURGE CAPACITOR
OR	GROUND ROD GROUND ROD WELL
30A	FUSE, AMPERE RATING AS NOTED
OR HTR	HEATER
	INDUCTOR
TG	TACHOMETER GENERATOR
	CONTACT, NORMALLY OPEN (NO)
	CONTACT, NORMALLY CLOSED (NC)
	OVERLOAD RELAY HEATER
K	KEY INTERLOCK
TB	TERMINAL OR TEST BLOCK
RTD	RESISTANCE TEMPERATURE DETECTOR
VE	VIBRATION DETECTOR
DM	DAMPER MOTOR
ETM OR	ELAPSED TIME METER
MOV	MOTOR OPERATED VALVE
	PUSH BUTTON STATION, REFER TO ELECTRICAL SCHEMATIC FOR NUMBER OF DEVICES.
J	JUNCTION BOX
JP	POWER JUNCTION BOX
JI	4-20mA SIGNAL JUNCTION BOX
JC	CONTROL JUNCTION BOX
PB	PULL BOX
TC	TERMINATION CABINET
	REMOTE DEVICES
5	MOV WITHOUT INTEGRATED DISCONNECT
5	MOV WITH INTEGRATED DISCONNECT
	INDICATES LIMITS OF EQUIPMENT OR WIRING ENCLOSURE
MPR	(MPR) MOTOR PROTECTION RELAY

GENERAL NOTE

THIS IS A STANDARD LEGEND. SOME SYMBOLS MAY NOT APPEAR ON THE DRAWINGS.

NO.	DATE	REVISION	APP.

GAI
Gupta & Associates, Inc.
CONSULTING ENGINEERING
Registration No. F-2593
302 Dennis St.,
Houston, Texas 77006
Tel: 713-636-2936
Fax: 713-636-2967
email: hforouzan@gaiconsulting.com

ARCADIS
Infrastructure · Water · Environment · Buildings
1330 Post Oak Blvd, Suite 2250
Houston, TX 77056
Tel: 713-953-4800
Fax: 713-977-4620
www.arcadis.com
Texas Registered Engineering Firm F-533

SURVEYED BY: AMANI ENGR.
FB NO. P-6335

STATE OF TEXAS
H. A. FOROUZAN
77748
REGISTERED PROFESSIONAL ENGINEER
11/18/2025

CITY OF HOUSTON
HOUSTON PUBLIC WORKS

LIFT STATION REHABILITATION & RECONSTRUCTION CONSENT DECREE

ELECTRICAL LEGENDS AND SYMBOLS – I

G-10

WBS NUMBER	FOR CITY OF HOUSTON USE ONLY
R-000267-0175-4	
DRAWING SCALE	
NONE	
CITY OF HOUSTON PM	
NP NAWARAJ PANTA, P.E.	
SHEET NO. 10 OF 312	

FILE PATH: O:\H8103_Houston Lift Station Removal And Replacement (CMAR)\6 Drawings\Electrical\Working\Electrical General\H8103_G-10.dwg
PLOT STYLE: GAI.ctb PLOTTED: 11/18/2025 6:51 PM

SYMBOLS	DESCRIPTION
A LA-3 b	REFER TO LIGHT FIXTURE SCHEDULE FOR TYPE FIXTURE: "A"- FIXTURE TYPE "b"- CONTROLLED BY SWITCH "b" "LA-3"- CIRCUIT 3 FROM PANEL LA
b A LA-3	REFER TO LIGHT FIXTURE SCHEDULE FOR TYPE FIXTURE, NOTATIONS SAME AS ABOVE
A LA-3 OR LA-3 A NS	INDICATES LIGHT FIXTURES WHICH ARE NONSWITCHED, NOTATIONS SAME AS ABOVE "NS" - NONSWITCHED
A LA-3 b	WALL MOUNTED LIGHTING FIXTURE, NOTATIONS SAME AS ABOVE
A LA-3 b	POLE MOUNTED LIGHTING FIXTURE, NOTATIONS SAME AS ABOVE
A LA-3	EMERGENCY LIGHTING BATTERY UNIT WITH TWO LAMP HEADS, NOTATIONS SAME AS ABOVE
A	REMOTE EMERGENCY ADJUSTABLE WALL LIGHTING FIXTURE WITH TWO LAMP HEADS, NOTATIONS SAME AS ABOVE
A LA-3	CEILING MOUNTED EXIT SIGN, NOTATIONS SAME AS ABOVE
A LA-3	WALL OUTLET EXIT SIGN. ARROW INDICATES DIRECTION OF EGRESS, NOTATIONS SAME AS ABOVE
	CONDUIT, EXPOSED/SURFACE MOUNTED
	CONDUIT OR DUCTBANK, CONCEALED
	CONDUIT, EXPOSED/SURFACE MOUNTED, TURNING UP
	CONDUIT, EXPOSED/SURFACE MOUNTED, TURNING DOWN
	CONDUIT STUBBED OUT AND CAPPED
2(3#3/0+1#2G, 3"C)	DENOTES A QUANTITY OF 2 SETS OF THREE (3) NO.3/0 AWG CONDUCTORS AND 1 NO.AWG GROUND CONDUCTOR EACH INSTALLED IN 3" CONDUIT.
2(2/C#16TS)	DENOTES A QUANTITY OF TWO INSTRUMENT CABLES. EACH CONSISTS OF TWO NO.16 AWG CONDUCTORS TWISTED TOGETHER AND COVERED WITH A METALLIC SHIELD AND AN OVERALL PROTECTIVE JACKET. REFER TO THE SPECIFICATIONS FOR THE EXACT CABLE TO BE PROVIDED.
3(4"C)	DENOTES A QUANTITY OF THREE 4-INCH CONDUITS.
	FLEXIBLE METAL CONDUIT "WHIP" (2#12, #12G, 3/4"C UNLESS OTHERWISE NOTED) FOR RECESSED LIGHTING FIXTURES AND LIQUID TIGHT MOTOR CONNECTIONS
LP#-1,3	HOMERUN, CIRCUITS 1 AND 3 RUN TO PANEL LP-1
$b	SINGLE POLE SWITCH "b"- INDICATES SWITCH LEG SHALL CONTROL LIGHT FIXTURES WITH "b" DESIGNATION
$b^x	MULTI POLE SWITCH "x"- INDICATES NUMBER OF POLE "b"- NOTATIONS SAME AS ABOVE
$b^P	SINGLE POLE SWITCH AND PILOT LIGHT, "b"- NOTATIONS SAME AS ABOVE
$b^D	DIMMER LIGHTING CONTROL SWITCH, "b"- NOTATIONS SAME AS ABOVE
$b^TM	TIME SWITCH, "b"-NOTATIONS SAME AS ABOVE
$^M	MANUAL MOTOR STARTER /DISCONNECT
$^OS	SINGLE POLE SWITCH WITH OCCUPANCY SENSOR
$^DM	SINGLE POLE DIMMER SWITCH
$x b xx	SWITCH ENCLOSURE "x"- NOTATIONS SAME AS ABOVE "b"- NOTATIONS SAME AS ABOVE "xx"- INDICATES ENCLOSURE TYPE
LC-1	LIGHTING CONTACTOR WITH NUMBER OF POLES AS INDICATED

SYMBOLS	DESCRIPTION
L*-## OR L*-##	LIGHTING PANELBOARD (TYPICAL 120V/240V OR 120V/208V)
H*-## OR H*-##	DISTRIBUTION PANELBOARD (TYPICAL 277V/480V)
LA-3	DUPLEX RECEPTACLE, 20A, 120V, 2P, 3W GFI- GROUND FAULT INTERRUPTER TYPE WP- WEATHERPROOF "LA-3"- CIRCUIT 3 FROM PANEL LA
	WELDING RECEPTACLE
	20A, 240V, 2P, 3W, RECEPTACLE
	CLASS 1, DIVISION 1, RATED TWIST LOCK RECEPTACLE, VOLTAGE AND AMPERAGE RATING AS NOTED
	SINGLE FACE, SINGLE GANG PEDESTAL WITH 20A, 120V, 2P, 3W DUPLEX RECEPTACLE, FURNISHED AND INSTALLED UNDER DIVISION 16 UNLESS OTHERWISE NOTED. * DENOTES FURNISHED UNDER OTHER DIVISIONS OF THE SPECIFICATIONS BUT INSTALLED UNDER DIVISION 16
D	DOUBLE FACE, SINGLE GANG PEDESTAL WITH 20A, 120V, 2P, 3W DUPLEX RECEPTACLE AND 20A, 240V, 2P, 3W SINGLE RECEPTACLE, FURNISHED AND INSTALLED UNDER DIVISION 16 UNLESS OTHERWISE NOTED. * DENOTES FURNISHED UNDER OTHER DIVISIONS OF THE SPECIFICATIONS BUT INSTALLED UNDER DIVISION 16
	DOUBLE RECEPTACLE, 20A, 120V, 2P, 3W MOUNTED IN BOX CURB FURNISHED UNDER OTHER DIVISIONS OF THE SPECIFICATIONS BUT INSTALLED UNDER DIVISION 16
	SINGLE GANG 20A, 120V, 3P, 3W RECEPTACLE
	QUAD RECEPTACLE
OS	OCCUPANCY SENSOR CAPABLE OF VACANCY
PC	PHOTOCELL
	QUICK CONNECT TERMINALS

TAGGING		
EQUIPMENT	EQUIPMENT TAG	CONDUIT TAG
MOTOR CONTROL CENTER	MCC-1	MC1-XX
SWITCHBOARD	SWBD-1	SB1-XX
SWITCHGEAR	SWGR-1	SG1-XX
PROGRAMMABLE LOGIC CABINET	PLC-1	PL1-XX
VARIABLE FREQUENCY DRIVE	VFD-1	VF1-P
LOW VOLTAGE TRANSFORMER	TX-LX OR TX-HX	TXLX-P OR TXHX-P
SERVICE TRANSFORMER	TX-1	TX1-P
GENERATOR	GEN-1	GN1-X
LIGHTING/POWER PANELBOARD	LP/PP-XX	XX-XX
AUTOMATIC TRANSFER SWITCH	ATS-1	AT1-XX
TYPICAL TAG FOR CONDUIT FROM THIS EQUIPMENT TO DOWN STREAM LOAD FOR EXAMPLE.		

EXAMPLE LEGEND:

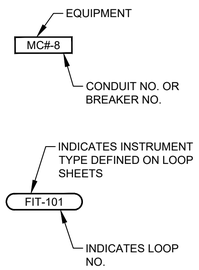

SYMBOLS	DESCRIPTION
COMMUNICATIONS SYSTEMS	
	TELEPHONE OUTLET
	DATA OUTLET
P	DATA INPUT/OUTPUT CABLE OUTLET. "P" DENOTES PROCESS COMPUTER SYSTEM
	VOICE/DATA OUTLET
S	PAGING SPEAKER HORN
S	PAGING SPEAKER BI-DIRECTIONAL
S	PAGING SPEAKER, CEILING MOUNTED TYPE
S	PAGING SPEAKER, WALL MOUNTED TYPE
SECURITY SYSTEMS	
SAP	SECURITY ALARM PANEL
DS	SECURITY ALARM DOOR SWITCH
KP	SECURITY ALARM KEY PAD
CR	SECURITY SYSTEM CARD ACCESS READER
WS	SECURITY ALARM WINDOW SWITCH
MD	SECURITY ALARM MOTION DETECTOR
	SECURITY CAMERA CCTV- CLOSED CIRCUIT TV CAMERA PTZ- PAN, TILT, ZOOM CAMERA LENS CONTROLS
GB	GLASS BREAK DETECTOR
ACP	ACCESS CONTROL PANEL
FIRE ALARM SYSTEMS	
FACP	FIRE ALARM CONTROL PANEL
SD	SMOKE DETECTOR : D- DENOTES DUCT SMOKE DETECTOR R- DENOTES FIXED TEMPERATURE RATE-OF-RISE TYPE.
F	FIRE ALARM MANUAL PULL STATION, MOUNT AT 4'-0"
	ALARM HORN, MOUNT AT 7'-6" : F- DENOTES FIRE ALARM
	ALARM STROBE, MOUNT AT 6'-8" : F- DENOTES FIRE ALARM
	ALARM HORN AND STROBE LIGHT COMBINATION, MOUNT AT 6'-8" : F- DENOTES FIRE ALARM

ABBREVIATIONS	
AC	ALTERNATING CURRENT
AFD	ADJUSTABLE FREQUENCY DRIVE
AFF	ABOVE FINISHED FLOOR
AG	ABOVE GRADE
ALUM	ALUMINUM
AMP/A	AMPERE
ATS	AUTOMATIC TRANSFER SWITCH
AUTO	AUTOMATIC
AUX	AUXILIARY
AWG	AMERICAN WIRE GAUGE
C	CONDUIT
CB	CIRCUIT BREAKER
CKT	CIRCUIT
CLF	CURRENT LIMITING FUSE
CP	CONTROL PANEL
CPT	CONTROL POWER TRANSFORMER
CR	CONTROL RELAY
CS	CONTROL SWITCH
CT	CURRENT TRANSFORMER
CU	COPPER
DC	DIRECT CURRENT
DI	DOOR INTERLOCK
DN	DOWN
DWG	DRAWING
EHH	ELECTRICAL HANDHOLE
EC	EMPTY CONDUIT
ELEC	ELECTRICAL
ELEV	ELEVATION
EM	EMERGENCY
EMH	ELECTRICAL MANHOLE
EO	ELECTRICALLY OPERATED
ERMS	ENERGY-REDUCING MAINTENANCE SWITCH
FBO	FURNISHED BY OTHERS
FO	FIBER OPTIC
FRP	FIBERGLASS REINFORCED POLYESTER
FU	FUSE
GCP	GENERATOR CONTROL PANEL
GEN	GENERATOR
G, GRD	GROUND
GFI	GROUND FAULT INTERRUPTER
GFCI	GROUND FAULT CIRCUIT INTERRUPTER
GO	GATE OPERATOR
GRS	GALVANIZED RIGID STEEL
HH	HANDHOLE
HT	HEIGHT
HTP	HEAT TRACE PANEL
HZ	HERTZ
IMH	INSTRUMENT MAN HOLE
INST	INSTRUMENT
LA	LIGHTNING ARRESTER
LC	LIGHTNING CONTACTOR
LCP	LOCAL CONTROL PANEL
LGTS	LIGHTS
LP	LIGHTING PANEL
	CONTINUED ABOVE RIGHT

	CONTINUED BELOW LEFT
LSIG	LONG TIME/SHORT TIME/ INSTANTANEOUS/GROUND FAULT FEATURE INCLUDED
MCC	MOTOR CONTROL CENTER
MCP	MOTOR CIRCUIT PROTECTOR
MFR	MANUFACTURER
MH	MANHOLE
MLO	MAIN LUGS ONLY
MTG	MOUNTING
MTD	MOUNTED
MTS	MANUAL TRANSFER SWITCH
NC	NORMALLY CLOSED
NO	NORMALLY OPEN OR NUMBER
NTS	NOT TO SCALE
OL	OVERLOAD
OLX	OVERLOAD CONTROL RELAY
PB	PUSH BUTTON OR PULL BOX
PCC	PUMP CONTROL CONSOLE
PPR	PHASE PROTECTIVE RELAY
PFR	PHASE FAILURE RELAY
PH	PHASE
PNLBD	PANELBOARD
PR	PAIR
PT	POTENTIAL TRANSFORMER
PTT	PUSH TO TEST TYPE
PVC	POLYVINYL CHLORIDE
QTY	QUANTITY
RCP	RELAY CONTROL PANEL
RECP	RECEPTACLES
RVSS	REDUCED VOLTAGE SOFT STARTER
SC	SURGE CAPACITOR
SCH	SCHEMATIC
SCCR	SHORT CIRCUIT CURRENT RATING
SEC	SECONDS OR SECONDARY
SH	SHIELDED OR SHEET
SHT	SHEET
SM	MOTOR RATED SWITCH
SN	SOLID NEUTRAL
SS	STAINLESS STEEL
ST	STARTER
SV	SOLENOID VALVE
SW	SWITCH
SWBD	SWITCHBOARD
SWGR	SWITCHGEAR
TC	TERMINATION CABINET
TEL	TELEPHONE
TO	TIME DELAY ON OPENING
TS	TEMPERATURE SWITCH
TVSS	TRANSIENT VOLTAGE SURGE SUPPRESSOR
TSW	TWISTED SHIELDED WIRE
TYP	TYPICAL
UG	UNDERGROUND
V	VOLTS
VFD	VARIABLE FREQUENCY DRIVE
VO	VALVE OPERATOR
W	WIRE
WP	WEATHERPROOF
XP	EXPLOSION PROOF
XFMR	TRANSFORMER

GENERAL NOTE

THIS IS A STANDARD LEGEND. SOME SYMBOLS MAY NOT APPEAR ON THE DRAWINGS.

NO.	DATE	REVISION	APP.

GAI
Gupta & Associates, Inc.
CONSULTING ENGINEERING
Registration No. F-2593
302 Dennis St., Houston, Texas 77006
Tel: 713-636-2936
Fax: 713-636-2967
email: hforouzan@gaiconsulting.com

ARCADIS
Infrastructure · Water · Environment · Buildings
1330 Post Oak Blvd, Suite 2250
Houston, TX 77056
Tel: 713-953-4800
Fax: 713-977-4620
www.arcadis.com
Texas Registered Engineering Firm F-533

STATE OF TEXAS
H. A. FOROUZAN
77748
REGISTERED PROFESSIONAL ENGINEER
11/18/2025

SURVEYED BY: AMANI ENGR.
FB NO. P-6335

CITY OF HOUSTON

HOUSTON PUBLIC WORKS

LIFT STATION REHABILITATION & RECONSTRUCTION CONSENT DECREE

ELECTRICAL LEGENDS AND SYMBOLS – II

G-11

WBS NUMBER	FOR CITY OF HOUSTON USE ONLY
R-000267-0175-4	
DRAWING SCALE	
NONE	
CITY OF HOUSTON PM	
NP NAWARAJ PANTA, P.E.	
SHEET NO. 11 OF 312	

FILE PATH: O:\H8103_Houston Lift Station Removal And Replacement (CMAR)\6 Drawings\Electrical\Working\Electrical General\H8103_G-11.dwg
PLOT STYLE: GAI.ctb PLOTTED: 11/18/2025 6:51 PM

PRIMARY FLOW ELEMENTS

	MAGNETIC FLOW METER
	ULTRASONIC DOPPLER FLOW METER
	ULTRASONIC TIME TRANSIT FLOW METER
	VORTEX FLOW METER
	VENTURI TUBE
	TURBINE OR PROPELLER TYPE METER
	ROTAMETER
	PITOT TUBE
	WEIR FLOW METER
	PARSHALL FLUME OR TRAPEZOIDAL FLUME
	ORIFICE PLATE
	THERMAL MASS FLOWMETER

PRIMARY LEVEL ELEMENTS

	ULTRASONIC LEVEL TRANSDUCER
	RADAR LEVEL TRANSDUCER
	PRIMARY ELEMENT PRESSURE PROBE LEVEL TRANSMITTER
	BUBBLER LEVEL TUBE ELEMENT
	CONDUCTIVE LEVEL PROBE
	FLOAT SWITCH

VALVES

	VALVE - OTHER IN-LINE TYPE NOT OTHERWISE IDENTIFIED
	THREE-WAY VALVE
	BALL VALVE
	GLOBE VALVE
	PINCH VALVE
	GATE VALVE
	NEEDLE VALVE
	DIAPHRAGM VALVE
	BUTTERFLY VALVE
	CHECK VALVE WITH FLOW DIRECTION
	PLUG VALVE
	PRESSURE-REDUCING REGULATOR INTERNAL PRESSURE TAP
	BACK PRESSURE REGULATOR INTERNAL PRESSURE TAP
	PRESSURE-REDUCING REGULATOR EXTERNAL PRESSURE TAP
	BACK PRESSURE REGULATOR EXTERNAL PRESSURE TAP

VALVES

S	SOLENOID ACTUATED VALVE
	"X" table below
OR NO SYMBOL	MANUAL VALVE

"X"	
P	AIR CYLINDER
O	OIL CYLINDER
H	HYDRAULIC CYLINDER
E	ELECTRIC MOTOR
S	SOLENOID VALVE

MISC PROCESS SYMBOLS

	ANNULAR TYPE SEAL
	CHEMICAL INJECTION POINT
	STRAINER
	DRAIN
	NORMAL OPERATING LEVEL
	UV CHAMBER
	FLOW STRAIGHTENER
	LOAD CELL
	SPRAY NOZZLE
	BLIND FLANGE
	FLANGE
	DIAPHRAGM SEAL
	PRESSURE RELIEF (OUT)
	VACUUM RELIEF (IN)

GATES

	SLUICE/SLIDE GATE
	FLOW CONTROL GATE

MOTORS

M	VARIABLE SPEED MOTOR
M	CONSTANT SPEED MOTOR

PUMPS, BLOWERS AND MISC EQUIPMENT

	CENTRIFUGAL BLOWER
	CENTRIFUGAL PUMP
	DIAPHRAGM PUMP AND MOTOR
	PROGRESSIVE CAVITY PUMP
	SUBMERSIBLE PUMP
	POSITIVE DISPLACEMENT BLOWER

PUMPS, BLOWERS AND MISC EQUIPMENT

	MIXER/FLOCCULATOR/AERATOR
	VERTICAL PUMP-1 USED WHEN DISCHARGE LINE IS IN WETWELL
	VERTICAL PUMP-2 USED WHEN DISCHARGE LINE IS EXPOSED.
	VERTICAL PUMP SHAFT USED WHEN INTAKE OF PUMP IS ENCASED.
	SUBMERSIBLE MIXER
	COMPRESSOR
	HEAT EXCHANGER
	FEED PUMP
	GRINDER/MACERATOR
	METERING PUMP
	PLUNGER PUMP
	PERISTALTIC METERING PUMP
	CENTRIFUGE
	PULSATION DAMPENER
	TURBO BLOWER

PUMPS, BLOWERS AND MISC EQUIPMENT

	ROTARY SCREEN

CONTROL ENCLOSURE, INSTRUMENTS AND SCADA

XXX / P AAA YY / BBB CCC D / ZZZ	DIGITAL/ANALOG INSTRUMENT

AAA	ISA TAG (REFER TO TABLE)
BBB	LOOP NUMBER
CCC	LOOP NUMBER SUB
D	DIVISION NUMBER
P	POWER REQUIREMENT
XXX	DESCRIPTION (USED ON PANEL INSTRUMENTS)
YY	CHEMICAL
ZZZ	LOCATION

DIGITAL/ANALOG INSTRUMENT
-LOCATED IN THE FIELD
-NOT INSIDE OF PANEL
-VISIBLE AT FIELD LOCATION
-NORMALLY OPERATOR ACCESSIBLE

DIGITAL/ANALOG INSTRUMENT
-LOCATED ON PANEL
-VISIBLE TO OPERATOR
-NORMALLY OPERATOR ACCESSIBLE

DIGITAL/ANALOG INSTRUMENT
-LOCATED INSIDE PANEL
-NOT VISIBLE TO OPERATOR
-NORMALLY NOT ACCESSIBLE

DISPLAY (INDICATION/CONTROLLER)

AAA	ISA TAG (REFER TO TABLE)
BBB	LOOP NUMBER
CCC	LOOP NUMBER SUB
XXX	DESCRIPTION

DISPLAY (INDICATION/CONTROLLER)
-LOCATED IN THE FIELD
-NOT INSIDE OF PANEL
-VISIBLE AT FIELD LOCATION
-NORMALLY OPERATOR ACCESSIBLE

DISPLAY (INDICATION/CONTROLLER)
-LOCATED ON PANEL
-VISIBLE TO OPERATOR
-NORMALLY OPERATOR ACCESSIBLE

DISPLAY (INDICATION/CONTROLLER)
-LOCATED INSIDE PANEL
-NOT VISIBLE TO OPERATOR
-NORMALLY NOT ACCESSIBLE

INTERLOCKING RELAY

CONTROL ENCLOSURE AND SCADA

	DIGITAL INPUT
	DIGITAL OUTPUT
	ANALOG INPUT
	ANALOG OUTPUT
	SURGE SUPPRESSOR
	OPTO ISOLATOR
/	SIGNAL CONVERTER/ ISOLATOR

/ - (INPUT/OUTPUT)
* DEFINED AS FOLLOWS:
E - VOLTAGE
I - CURRENT
P - PNEUMATIC
PD - PULSE DURATION
H - HYDRAULIC
O - ELECTROMAGNETIC, SONIC
R - RESISTANCE (ELECTRIC)

CONTROL ENCLOSURE, INSTRUMENTS AND SCADA

PLC/RTU LOGIC

FUNCTION SYMBOLS AND ABBREVIATIONS

K	PROPORTIONAL GAIN OR ATTENUATE (INPUT:OUTPUT)
- K	REVERSE PROPORTIONAL GAIN OR ATTENUATE (INPUT:OUTPUT)
Σ	SUMMING
Σ/n	AVERAGING
Δ	SUBTRACTING
√	EXTRACT SQUARE ROOT
÷	DIVIDE
X	MULTIPLY
S	INTEGRATE
+	BIAS POSITIVE
-	BIAS NEGATIVE
F(x)	NONLINEAR OR UNSPECIFIED FUNCTION
>	HIGH SELECT
<	LOW SELECT
⊦	HIGH LIMIT
⊥	LOW LIMIT

F(X)

INSTRUMENT (COMMON HOUSING)	INSTRUMENT (SEPERATOR HOUSING)	INSTRUMENT (PART OF MAJOR EQUIPMENT)

GENERAL NOTES:

1. THIS IS A GENERAL LEGEND SHEET, SOME SYMBOLS AND ABBREVIATIONS MAY NOT APPLY TO THIS SPECIFIC PROJECT.
2. THIS LEGEND APPLIES TO INSTRUMENTATION DIAGRAMS ONLY AND MAY DIFFER FROM LEGENDS FOR OTHER SHEETS.
3. IN GENERAL THIS LEGEND SHEET AND THE INSTRUMENTATION DIAGRAMS ARE BASED ON INTERNATIONAL SOCIETY OF AUTOMATION, STANDARDS FOR PRACTICES FOR INSTRUMENTATION, STANDARD S5.1 SOME MODIFICATIONS, ADDITIONS AND ALTERATIONS HAVE BEEN MADE AS REQUIRED TO ACCOMMODATE THE PROJECT REQUIREMENTS.
4. SOME PROCESS ITEMS, SUCH AS EQUIPMENT ISOLATION VALVES, BYPASS LINES, ETC., WHICH ARE NOT CRITICAL FOR AN UNDERSTANDING OF THE INSTRUMENTATION AND CONTROL FUNCTIONS ARE NOT SHOWN ON THE INSTRUMENTATION SHEETS.
5. SEE ELECTRICAL SHEETS AND SPECIFICATIONS FOR ADDITIONAL CONTROL AND INTERLOCK REQUIREMENTS FOR EQUIPMENT NOT SHOWN OR NOT PROVIDED BY THE INSTRUMENTATION SUPPLIER.
6. IN THE EVENT OF DISCREPANCY BETWEEN THE PROCESS & INSTRUMENTATION DIAGRAMS AND THE LOOP DIAGRAMS, THE INFORMATION FROM THE LOOP DIAGRAMS SHALL BE USED.

HAND SWITCH ABBREVIATIONS:

HOA	HAND/OFF/AUTO
HOR	HAND/OFF/REMOTE
LOC	LOCAL/OFF/COMPUTER
LOR	LOCAL/OFF/REMOTE
LOS	LOCKOUT STOP
OSC	OPEN/STOP/CLOSE
RSL	RAISE/STOP/LOWER
L/C	LOCAL/COMPUTER
L/R	LOCAL/REMOTE
O/C	OPEN/CLOSE
S/S	START/STOP
A/M	AUTO/MANUAL
H/C	HAND/COMPUTER
PB	PUSHBUTTON

GENERAL NOTE

THIS IS A STANDARD LEGEND. SOME SYMBOLS MAY NOT APPEAR ON THE DRAWINGS.

GAI
Gupta & Associates, Inc.
CONSULTING ENGINEERING
Registration No. F-2593
302 Dennis St., Houston, Texas 77006
Tel: 713-636-2936
Fax: 713-636-2987
email: hforouzan@gaiconsulting.com

ARCADIS
Infrastructure · Water · Environment · Buildings
1330 Post Oak Blvd, Suite 2250
Houston, TX 77056
Tel: 713-953-4800
Fax: 713-977-4620
www.arcadis.com
Texas Registered Engineering Firm F-533
SURVEYED BY: AMANI ENGR.
FB NO. P-6335

STATE OF TEXAS · H. A. FOROUZAN · 77748 · REGISTERED PROFESSIONAL ENGINEER
11/18/2025

CITY OF HOUSTON

HOUSTON PUBLIC WORKS

LIFT STATION REHABILITATION & RECONSTRUCTION CONSENT DECREE

INSTRUMENTATION LEGENDS AND SYMBOLS – I

G–12

WBS NUMBER	FOR CITY OF HOUSTON USE ONLY
R–000267–0175–4	
DRAWING SCALE	
NTS	
CITY OF HOUSTON PM	
NP NAWARAJ PANTA, P.E.	
SHEET NO. 12 OF 312	

NO.	DATE	REVISION	APP.

FILE PATH: O:\H8103_Houston Lift Station Removal And Replacement (CMAR)\6 Drawings\Electrical\Working\Electrical General\H8103_G-12.dwg
PLOT STYLE: GAI.ctb PLOTTED: 11/18/2025 6:51 PM

LINE SYMBOLS

	MAJOR PROCESS LINE
	MINOR PROCESS LINE
	FUTURE PROCESS LINE
	EXISTING PROCESS LINE
	HARDWIRED SIGNAL
	SOFT LINK
	HYDRAULIC LINK
	PNEUMATIC LINK
	CAPILLARY TUBE OR FILLED SYSTEM SIGNAL
	ELECTROMAGNET OR SONIC SIGNAL (GUIDED)
DESCRIPTION X SHEET# Y	(USED WHEN REFERRING TO A SHEET IN THE DESIGN SET) DESCRIPTION - WHERE FLOW IS GOING SHEET# - WHAT SHEET PROCESS CONTINUES ON X - USED WHEN TWO OR MORE ARROWS ARE REFERING TO THE SAME SHEET. Y - USED WHEN TWO OR MORE ARROWS ARE REFERRING TO THE SAME SHEET.
DESCRIPTION	(USED WHEN REFERRING TO A SHEET NOT IN THE DESIGN SET) DESCRIPTION - WHERE FLOW IS GOING
CAT5e — CAT5e	CAT-5e ETHERNET CABLE
CAT6 — CAT6	CAT-6 ETHERNET CABLE
— - — - —	MODBUS PLUS CABLE
— —	RS-485 CABLE
RS-232 — RS-232	RS-232 CABLE
POE — POE	POWER OVER ETHERNET CABLE
T1 — T1	T1 FIBER CONNECTION
FO — FO	NON-SPECIFIC FIBER OPTIC CABLE
100 — 100	FIBER 100BASE-FX
1000 — 1000	FIBER 1000BASE-FX
	SIGNAL CROSSING
	PROCESS LINE CROSSING
	PROCESS LINE/ HARDWIRE SIGNAL CROSSING

EQUIPMENT/LOOP TAGGING

X	EQUIPMENT TAG USED TO IDENTIFY NON-INSTRUMENT EQUIPMENT
X	LOOP TAG USED TO TIE THE PROCESS FLOW DIAGRAM TO A LOOP DIAGRAM

STANDARD VALVE AND PIPING USAGE

PDIT 1	BLOCK/BLEED VALVE ARRANGEMENT
PI 1	INSTRUMENTS WITH VALVE ONLY
PI 1	INSTRUMENTS WITH DIAPHRAGM SEAL
PI 1	INSTRUMENTS WITH ANNULAR SEAL

PANEL DETAIL SYMBOLS

RUN	INDICATING LIGHT -R RED (ACTIVE EQUIPMENT) -G GREEN (EQUIPMENT OFF) -W WHITE (POWER) -B BLUE (CONDITION IE BACKWASH IN PROGRESS) -A AMBER (ALARM CONDITION)
H/O/A	SWITCH -L/R (LOCAL - REMOTE) -L/O/A (LOCAL - OFF - AUTO) -L/O/R (LOCAL - OFF - REMOTE) -H/O/A (HAND - OFF - AUTO) -H/O/R (HAND - OFF - REMOTE)
START	PUSHBUTTON
START	PUSHBUTTON
	HORN
	BEACON
OIT	OPERATOR INTERFACE TERMINAL

SECURITY SYSTEM SYMBOLS

CCTV	CLOSED CIRCUIT TELEVISION CAMERA
PTZ	PAN, TILT, ZOOM CAMERA

GENERAL ABBREVIATIONS

AI	ANALOG INPUT
AL	ALARM PILOT LIGHT
AO	ANALOG OUTPUT
AS	AIR SUPPLY
ASP	APPLICATION SERVICE PROVIDER
BFV	BUTTERFLY VALVE
CCTV	CLOSED CIRCUIT TELEVISION
CH4	METHANE
CL2	CHLORINE
COND	CONDUCTIVITY
COMP	COMPUTER
CP	CONTROL PANEL
CPU	CENTRAL PROCESSING UNIT
CRC	CONTROL ROOM CONSOLE
CTU	CENTRAL TELEMETRY UNIT
DCU	DISTRIBUTED CONTROL UNIT
DI	DIGITAL OR DISCRETE INPUT
DO	DISSOLVED OXYGEN OR DIGITAL OUTPUT
DPU	DISTRIBUTED PROCESSING UNIT
EPP	ETHERNET PATCH PANEL
ES	EMERGENCY STOP
ESW	ETHERNET SWITCH
ETM	ELAPSED TIME METER
FC	FAIL CLOSED
FCP	FIELD CONTROL PANEL
FCS	FILTER CONTROL STATION
FCV	FLOW CONTROL VALVE
FLP	FAIL LAST POSITION
FO	FAIL OPEN
FOPP	FIBER OPTIC PATCH PANEL
FPR	FEEDER PROTECTION RELAY
H2S	HYDROGEN SULFIDE
HMI	HUMAN MACHINE INTERFACE
JB	JUNCTION BOX
IO	INPUT/OUTPUT
IR	INFARED
LAS	LIQUID AMMONIA SULFATE
LCP	LOCAL CONTROL PANEL
LCS	LOCAL CONTROL STATION
LT	LEVEL TRANSMITTER
LPU	LOCAL PROCESSING UNIT
LTS	LOCAL TERMINAL SYSTEM
MC	MOTOR CONTROLLER
NAOCL	SODIUM HYPOCHLORIDE
NC	NORMALLY CLOSED
NH3	AMMONIA
NIM	NETWORK INTERFACE MODULE
NO	NORMALLY OPEN
MCC	MOTOR CONTROL CENTER
MM	MULTI MODE FIBER OPTIC CABLE
MPR	MOTOR PROTECTION RELAY
OIT	OPERATIONS INTERFACE TERMINAL
OL	OVERLOAD
OWS	OPERATOR WORKSTATION
PB	PUSH BUTTON
PCSI	PROCESS CONTROL SYSTEM INTEGRATOR
pH	HYDROGEN ION
PLC	PROGRAMMABLE LOGIC CONTROLLER
PMCS	PROCESS MONITORING CONTROL SYSTEM
POLY	POLYMER
PQM	POWER QUALITY METER
PS	POWER SUPPLY
PSU	POWER SUPPLY UNIT
PV	PINCH VALVE
RBC	REMOTE BASE CONTROLLER
RIO	REMOTE INPUT OUTPUT
RTU	REMOTE TERMINAL UNIT
SCADA	SUPERVISORY CONTROL AND DATA AQUISITION
SM	SINGLE MODE FIBER OPTIC CABLE
SO2	SULFUR DIOXIDE
SOL	SOLENOID
SPD	SURGE PROTECTION DEVICE
UPS	UNINTERRUPTIBLE POWER SUPPLY
TC	TERMINATION CABINET
TURB	TURBIDITY
VIB	VIBRATION
VFD	VARIABLE FREQUENCY DRIVE
VLV	VALVE

MEANINGS OF IDENTIFICATION LETTERS

THIS TABLE APPLIES ONLY TO THE FUNCTIONAL IDENTIFICATION OF INSTRUMENTS.

	FIRST LETTER		SUCCEEDING LETTERS		
	MEASURED OR INITIATING VARIABLE	MODIFIER	READOUT OR PASSIVE FUNCTION	OUTPUT FUNCTION	MODIFIER
A	ANALYSIS/ANALYTICAL		ALARM		
B	BURNER, COMBUSTION			CLOSE, STOP, DECREASE (1)	
C	CONDUCTIVITY			CONTROL	
D	DENSITY (MASS) OR SPECIFIC GRAVITY	DIFFERENTIAL		OPEN START, INCREASE (1)	
E	VOLTAGE (EMF)		SENSOR (PRIMARY ELEMENT)		
F	FLOW RATE	RATIO (FRACTION)			FAIL (1)
G	GAUGING (DIMENSIONAL)		GLASS VIEWING DEVICE		
H	HAND				HIGH OR OPEN
I	CURRENT (ELECTRICAL)		INDICATE		
J	POWER	SCAN			
K	TIME OR TIME SCHEDULE	TIME RATE OR CHANGE		CONTROL STATION	
L	LEVEL		LIGHT (PILOT)		LOW OR CLOSED
M	MOISTURE, HUMIDITY, MOTOR, MOTION	MOMENTARY		MOTOR (1)	MIDDLE OR INTERMEDIATE
N	USERS CHOICE		USER'S CHOICE		ON OR OPERATE (1)
O	USER'S CHOICE		ORIFICE (RESTRICTION)		OVERLOAD (1)
P	PRESSURE OR VACUUM		POINT (TEST CONNECTION)	PUMP (1)	
Q	QUANTITY (2)	INTEGRATE OR TOTALIZE			
R	RADIATION		RECORD		
S	SPEED OR FREQUENCY	SAFETY		SWITCH	
T	TEMPERATURE			TRANSMIT	
U	MULTIVARIABLE (2)		MULTIFUNCTION (2)	MULTIFUNCTION (2)	MULTIFUNCTION (2)
V	VIBRATION, MECHANICAL ANALYSIS			VALVE, DAMPER OR LOUVER	
W	WEIGHT OR FORCE		WELL		UNCLASSIFIED (2)
X	UNCLASSIFIED (2)	X AXIS	UNCLASSIFIED (2)	UNCLASSIFIED (2)	UNCLASSIFIED (2)
Y	EVENT, STATE, PRESENCE	Y AXIS		RELAY, COMPUTE, CONVERT	
Z	POSITION, DIMENSION	Z AXIS		DRIVE, ACTUATE OR UNCLASSIFIED FINAL CONTROL ELEMENT	

COMMON HMI/INSTRUMENT ISA TAGGING

ABBREVIATION	MEANING
AIT	ANALYTICAL INDICATING TRANSMITTER
AE	ANALYTICAL ELEMENT
AI	CHEMICAL RESIDUAL/INDICATION
CT	CYCLE TIMER
FIT	FLOW INDICATING TRANSMITTER
FE	FLOW ELEMENT
FI	FLOW INDICATION
FS	FLOAT SWITCH
HS	HAND SWITCH
JAL	POWER ALARM LOW
II	CURRENT INDICATION
LIT	LEVEL INDICATING TRANSMITTER
LE	LEVEL ELEMENT
LI	LEVEL INDICATION
LSH	LEVEL SWITCH HIGH
LSL	LEVEL SWITCH LOW
LAL	LEVEL ALARM LOW
LAH	LEVEL ALARM HIGH
PIT	PRESSURE INDICATING TRANSMITTER
PE	PRESSURE ELEMENT
PI	PRESSURE INDICATION
PPU	PERPETUAL POWER UNIT
PSH	PRESSURE SWITCH HIGH
PSL	PRESSURE SWITCH LOW
SI	SPEED INDICATION
SIC	SPEED INDICATING CONTROLLER
TIT	TEMPERATURE INDICATING TRANSMITTER
TE	TEMPERATURE ELEMENT
TI	TEMPERATURE INDICATION
TSH	TEMPERATURE SWITCH HIGH
WIT	WEIGHT INDICATING TRANSMITTER
WE	WEIGHT ELEMENT
WI	WEIGHT INDICATION
XA	FAULT ANNUNCIATION
YL	MISC. EVENT LIGHT (IN REMOTE)

COMMON HMI/INSTRUMENT ISA TAGGING

ABBREVIATION	MEANING
ZCH	OPEN GATE/VALVE
ZCL	CLOSE GATE/VALVE
ZSH	POSITION SWITCH HIGH
ZSL	POSITION SWITCH LOW
ZLH	VALVE/GATE OPEN
ZLL	VALVE/GATE CLOSED
ZIT	POSITION INDICATING TRANSMITTER

GENERAL NOTE

THIS IS A STANDARD LEGEND. SOME SYMBOLS MAY NOT APPEAR ON THE DRAWINGS.

NO.	DATE	REVISION	APP.

GAI
Gupta & Associates, Inc.
CONSULTING ENGINEERING
Registration No. F-2593
302 Dennis St.,
Houston, Texas 77006
Tel: 713-636-2936
Fax: 713-636-2967
email: hforouzan@gaiconsulting.com

ARCADIS
Infrastructure · Water · Environment · Buildings
1330 Post Oak Blvd, Suite 2250
Houston, TX 77056
Tel: 713-953-4800
Fax: 713-977-4620
www.arcadis.com
Texas Registered Engineering Firm F-533
SURVEYED BY: AMANI ENGR.
FB NO. P-6335

STATE OF TEXAS
H. A. FOROUZAN
97748
REGISTERED PROFESSIONAL ENGINEER
11/18/2025

CITY OF HOUSTON
HOUSTON PUBLIC WORKS

LIFT STATION REHABILITATION & RECONSTRUCTION CONSENT DECREE

INSTRUMENTATION LEGENDS & SYMBOLS – II

G–13

WBS NUMBER	FOR CITY OF HOUSTON USE ONLY
R–000267–0175–4	
DRAWING SCALE	
NONE	
CITY OF HOUSTON PM	
NP NAWARAJ PANTA, P.E.	
SHEET NO. 13 OF 312	

FILE PATH: O:\H8103_Houston Lift Station Removal And Replacement (CMAR)\6 Drawings\Electrical\Working\Electrical General\H8103_G-13.dwg
PLOT STYLE: GAI.ctb PLOTTED: 11/18/2025 6:51 PM

National Flood Hazard Layer FIRMette

FEMA

95°18'30"W 29°51'32"N

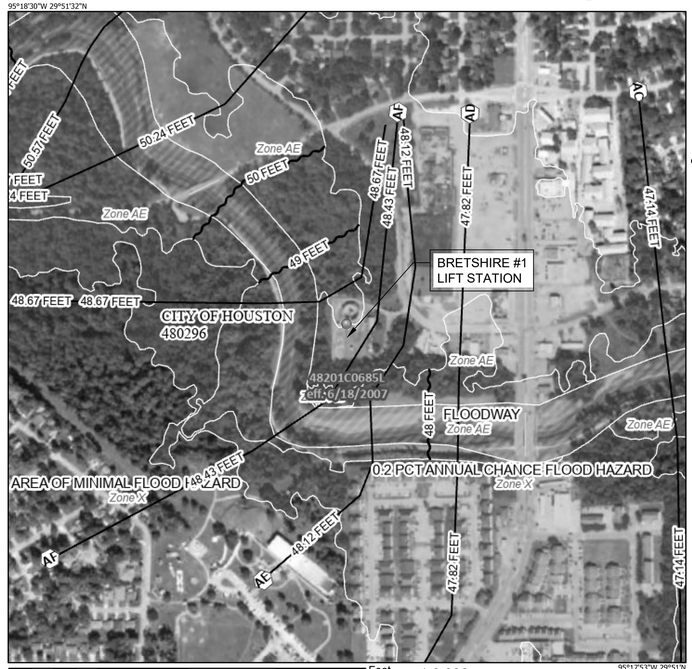

95°17'53"W 29°51'N

95°18'7"W 29°51'18"N

Feet 1:6,000

0 250 500 1,000 1,500 2,000

Basemap: USGS National Map: Orthoimagery: Data refreshed October, 2020

Legend

SEE FIS REPORT FOR DETAILED LEGEND AND INDEX MAP FOR FIRM PANEL LAYOUT

- SPECIAL FLOOD HAZARD AREAS
  - Without Base Flood Elevation (BFE) — Zone A, V, A99
  - With BFE or Depth — Zone AE, AO, AH, VE, AR
  - Regulatory Floodway
- OTHER AREAS OF FLOOD HAZARD
  - 0.2% Annual Chance Flood Hazard, Areas of 1% annual chance flood with average depth less than one foot or with drainage areas of less than one square mile — Zone X
  - Future Conditions 1% Annual Chance Flood Hazard — Zone X
  - Area with Reduced Flood Risk due to Levee. See Notes. — Zone X
  - Area with Flood Risk due to Levee — Zone D
- OTHER AREAS
  - NO SCREEN — Area of Minimal Flood Hazard — Zone X
  - Effective LOMRs
  - Area of Undetermined Flood Hazard — Zone D
- GENERAL STRUCTURES
  - Channel, Culvert, or Storm Sewer
  - Levee, Dike, or Floodwall
- OTHER FEATURES
  - 20.2 / 17.5 — Cross Sections with 1% Annual Chance Water Surface Elevation
  - Coastal Transect
  - Base Flood Elevation Line (BFE)
  - Limit of Study
  - Jurisdiction Boundary
  - Coastal Transect Baseline
  - Profile Baseline
  - Hydrographic Feature
- MAP PANELS
  - Digital Data Available
  - No Digital Data Available
  - Unmapped

N

The pin displayed on the map is an approximate point selected by the user and does not represent an authoritative property location.

This map complies with FEMA's standards for the use of digital flood maps if it is not void as described below. The basemap shown complies with FEMA's basemap accuracy standards

The flood hazard information is derived directly from the authoritative NFHL web services provided by FEMA. This map was exported on 10/21/2022 at 12:20 PM and does not reflect changes or amendments subsequent to this date and time. The NFHL and effective information may change or become superseded by new data over time.

This map image is void if the one or more of the following map elements do not appear: basemap imagery, flood zone labels, legend, scale bar, map creation date, community identifiers, FIRM panel number, and FIRM effective date. Map images for unmapped and unmodernized areas cannot be used for regulatory purposes.

National Flood Hazard Layer FIRMette

FEMA

95°28'22"W 29°52'18"N

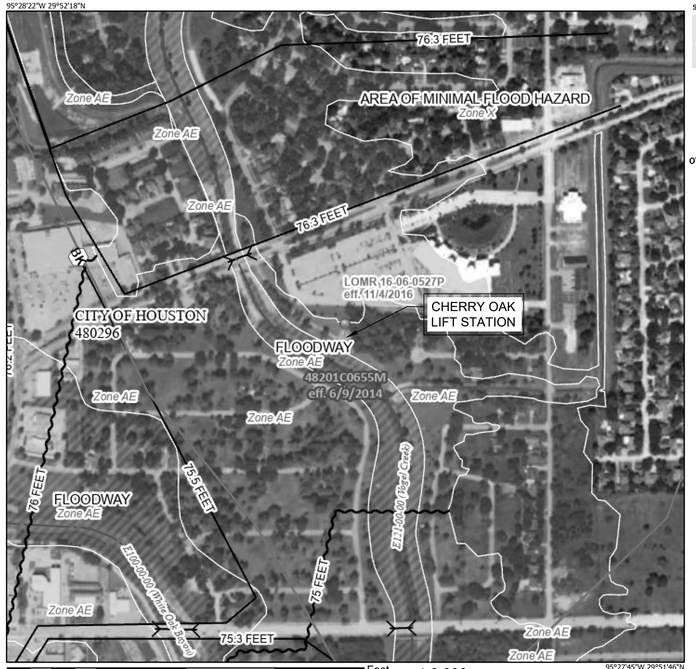

95°27'45"W 29°51'46"N

Feet 1:6,000

0 250 500 1,000 1,500 2,000

Basemap: USGS National Map: Orthoimagery: Data refreshed October, 2020

Legend

SEE FIS REPORT FOR DETAILED LEGEND AND INDEX MAP FOR FIRM PANEL LAYOUT

- SPECIAL FLOOD HAZARD AREAS
  - Without Base Flood Elevation (BFE) — Zone A, V, A99
  - With BFE or Depth — Zone AE, AO, AH, VE, AR
  - Regulatory Floodway
- OTHER AREAS OF FLOOD HAZARD
  - 0.2% Annual Chance Flood Hazard, Areas of 1% annual chance flood with average depth less than one foot or with drainage areas of less than one square mile — Zone X
  - Future Conditions 1% Annual Chance Flood Hazard — Zone X
  - Area with Reduced Flood Risk due to Levee. See Notes. — Zone X
  - Area with Flood Risk due to Levee — Zone D
- OTHER AREAS
  - NO SCREEN — Area of Minimal Flood Hazard — Zone X
  - Effective LOMRs
  - Area of Undetermined Flood Hazard — Zone D
- GENERAL STRUCTURES
  - Channel, Culvert, or Storm Sewer
  - Levee, Dike, or Floodwall
- OTHER FEATURES
  - 20.2 / 17.5 — Cross Sections with 1% Annual Chance Water Surface Elevation
  - Coastal Transect
  - Base Flood Elevation Line (BFE)
  - Limit of Study
  - Jurisdiction Boundary
  - Coastal Transect Baseline
  - Profile Baseline
  - Hydrographic Feature
- MAP PANELS
  - Digital Data Available
  - No Digital Data Available
  - Unmapped

N

The pin displayed on the map is an approximate point selected by the user and does not represent an authoritative property location.

This map complies with FEMA's standards for the use of digital flood maps if it is not void as described below. The basemap shown complies with FEMA's basemap accuracy standards

The flood hazard information is derived directly from the authoritative NFHL web services provided by FEMA. This map was exported on 10/21/2022 at 12:05 PM and does not reflect changes or amendments subsequent to this date and time. The NFHL and effective information may change or become superseded by new data over time.

This map image is void if the one or more of the following map elements do not appear: basemap imagery, flood zone labels, legend, scale bar, map creation date, community identifiers, FIRM panel number, and FIRM effective date. Map images for unmapped and unmodernized areas cannot be used for regulatory purposes.

National Flood Hazard Layer FIRMette

FEMA

95°15'18"W 29°52'5"N

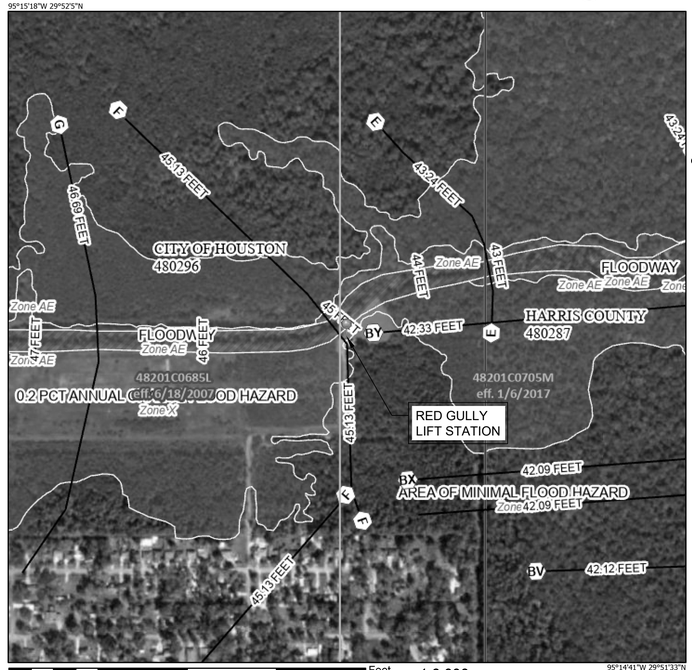

95°14'41"W 29°51'33"N

Feet 1:6,000

0 250 500 1,000 1,500 2,000

Basemap: USGS National Map: Orthoimagery: Data refreshed October, 2020

Legend

SEE FIS REPORT FOR DETAILED LEGEND AND INDEX MAP FOR FIRM PANEL LAYOUT

- SPECIAL FLOOD HAZARD AREAS
  - Without Base Flood Elevation (BFE) — Zone A, V, A99
  - With BFE or Depth — Zone AE, AO, AH, VE, AR
  - Regulatory Floodway
- OTHER AREAS OF FLOOD HAZARD
  - 0.2% Annual Chance Flood Hazard, Areas of 1% annual chance flood with average depth less than one foot or with drainage areas of less than one square mile — Zone X
  - Future Conditions 1% Annual Chance Flood Hazard — Zone X
  - Area with Reduced Flood Risk due to Levee. See Notes. — Zone X
  - Area with Flood Risk due to Levee — Zone D
- OTHER AREAS
  - NO SCREEN — Area of Minimal Flood Hazard — Zone X
  - Effective LOMRs
  - Area of Undetermined Flood Hazard — Zone D
- GENERAL STRUCTURES
  - Channel, Culvert, or Storm Sewer
  - Levee, Dike, or Floodwall
- OTHER FEATURES
  - 20.2 / 17.5 — Cross Sections with 1% Annual Chance Water Surface Elevation
  - Coastal Transect
  - Base Flood Elevation Line (BFE)
  - Limit of Study
  - Jurisdiction Boundary
  - Coastal Transect Baseline
  - Profile Baseline
  - Hydrographic Feature
- MAP PANELS
  - Digital Data Available
  - No Digital Data Available
  - Unmapped

N

The pin displayed on the map is an approximate point selected by the user and does not represent an authoritative property location.

This map complies with FEMA's standards for the use of digital flood maps if it is not void as described below. The basemap shown complies with FEMA's basemap accuracy standards

The flood hazard information is derived directly from the authoritative NFHL web services provided by FEMA. This map was exported on 10/21/2022 at 12:11 PM and does not reflect changes or amendments subsequent to this date and time. The NFHL and effective information may change or become superseded by new data over time.

This map image is void if the one or more of the following map elements do not appear: basemap imagery, flood zone labels, legend, scale bar, map creation date, community identifiers, FIRM panel number, and FIRM effective date. Map images for unmapped and unmodernized areas cannot be used for regulatory purposes.

NO.	DATE	REVISION	APP.

ARCADIS
Infrastructure · Water · Environment · Buildings
1330 Post Oak Blvd, Suite 2250
Houston, TX 77056
Tel: 713-953-4800
Fax: 713-977-4620
www.arcadis.com
Texas Registered Engineering Firm F-533

SURVEYED BY: **AMANI ENGR.**

FB NO. P-6335

STATE OF TEXAS · DAVID F. RIDGWAY · 105134 · LICENSED · PROFESSIONAL ENGINEER · 11/20/2025

CITY OF HOUSTON

HOUSTON PUBLIC WORKS

LIFT STATION REHABILITATION & RECONSTRUCTION CONSENT DECREE

FLOODPLAIN MAPS-I

G-14

WBS NUMBER	FOR CITY OF HOUSTON USE ONLY
R-000267-0175-4	
DRAWING SCALE	
AS NOTED	
CITY OF HOUSTON PM	
NP NAWARAJ PANTA, P.E.	
SHEET NO. 14 OF 312	

FILE PATH: C:\Users\omessan\DC\ACCDocs\Arcadis ACC US\AUS-30126616-Lift Station Rehab And Reconstruct CMAR\Project Files\10_WIP\10T Main PJ Folder\10T_GEN_General\14-Floodplain Maps-1.dwg
PLOT STYLE: COH.ctb PLOTTED: 11/17/2025 1:16 PM

National Flood Hazard Layer FIRMette

FEMA

Basemap: USGS National Map: Orthoimagery: Data refreshed October, 2020

Legend

SEE FIS REPORT FOR DETAILED LEGEND AND INDEX MAP FOR FIRM PANEL LAYOUT

- **SPECIAL FLOOD HAZARD AREAS**
  - Without Base Flood Elevation (BFE) — Zone A, V, A99
  - With BFE or Depth — Zone AE, AO, AH, VE, AR
  - Regulatory Floodway
- **OTHER AREAS OF FLOOD HAZARD**
  - 0.2% Annual Chance Flood Hazard, Areas of 1% annual chance flood with average depth less than one foot or with drainage areas of less than one square mile — Zone X
  - Future Conditions 1% Annual Chance Flood Hazard — Zone X
  - Area with Reduced Flood Risk due to Levee. See Notes. — Zone X
  - Area with Flood Risk due to Levee — Zone D
- **OTHER AREAS**
  - NO SCREEN — Area of Minimal Flood Hazard — Zone X
  - Effective LOMRs
  - Area of Undetermined Flood Hazard — Zone D
- **GENERAL STRUCTURES**
  - Channel, Culvert, or Storm Sewer
  - Levee, Dike, or Floodwall
- **OTHER FEATURES**
  - 20.2 / 17.5 — Cross Sections with 1% Annual Chance Water Surface Elevation
  - Coastal Transect
  - Base Flood Elevation Line (BFE)
  - Limit of Study
  - Jurisdiction Boundary
  - Coastal Transect Baseline
  - Profile Baseline
  - Hydrographic Feature
- **MAP PANELS**
  - Digital Data Available
  - No Digital Data Available
  - Unmapped

The pin displayed on the map is an approximate point selected by the user and does not represent an authoritative property location.

This map complies with FEMA's standards for the use of digital flood maps if it is not void as described below. The basemap shown complies with FEMA's basemap accuracy standards

The flood hazard information is derived directly from the authoritative NFHL web services provided by FEMA. This map was exported on 10/21/2022 at 12:15 PM and does not reflect changes or amendments subsequent to this date and time. The NFHL and effective information may change or become superseded by new data over time.

This map image is void if the one or more of the following map elements do not appear: basemap imagery, flood zone labels, legend, scale bar, map creation date, community identifiers, FIRM panel number, and FIRM effective date. Map images for unmapped and unmodernized areas cannot be used for regulatory purposes.

National Flood Hazard Layer FIRMette

FEMA

Basemap: USGS National Map: Orthoimagery: Data refreshed October, 2020

Legend

SEE FIS REPORT FOR DETAILED LEGEND AND INDEX MAP FOR FIRM PANEL LAYOUT

- **SPECIAL FLOOD HAZARD AREAS**
  - Without Base Flood Elevation (BFE) — Zone A, V, A99
  - With BFE or Depth — Zone AE, AO, AH, VE, AR
  - Regulatory Floodway
- **OTHER AREAS OF FLOOD HAZARD**
  - 0.2% Annual Chance Flood Hazard, Areas of 1% annual chance flood with average depth less than one foot or with drainage areas of less than one square mile — Zone X
  - Future Conditions 1% Annual Chance Flood Hazard — Zone X
  - Area with Reduced Flood Risk due to Levee. See Notes. — Zone X
  - Area with Flood Risk due to Levee — Zone D
- **OTHER AREAS**
  - NO SCREEN — Area of Minimal Flood Hazard — Zone X
  - Effective LOMRs
  - Area of Undetermined Flood Hazard — Zone D
- **GENERAL STRUCTURES**
  - Channel, Culvert, or Storm Sewer
  - Levee, Dike, or Floodwall
- **OTHER FEATURES**
  - 20.2 / 17.5 — Cross Sections with 1% Annual Chance Water Surface Elevation
  - Coastal Transect
  - Base Flood Elevation Line (BFE)
  - Limit of Study
  - Jurisdiction Boundary
  - Coastal Transect Baseline
  - Profile Baseline
  - Hydrographic Feature
- **MAP PANELS**
  - Digital Data Available
  - No Digital Data Available
  - Unmapped

The pin displayed on the map is an approximate point selected by the user and does not represent an authoritative property location.

This map complies with FEMA's standards for the use of digital flood maps if it is not void as described below. The basemap shown complies with FEMA's basemap accuracy standards

The flood hazard information is derived directly from the authoritative NFHL web services provided by FEMA. This map was exported on 10/18/2022 at 10:09 AM and does not reflect changes or amendments subsequent to this date and time. The NFHL and effective information may change or become superseded by new data over time.

This map image is void if the one or more of the following map elements do not appear: basemap imagery, flood zone labels, legend, scale bar, map creation date, community identifiers, FIRM panel number, and FIRM effective date. Map images for unmapped and unmodernized areas cannot be used for regulatory purposes.

National Flood Hazard Layer FIRMette

FEMA

Basemap: USGS National Map: Orthoimagery: Data refreshed October, 2020

Legend

SEE FIS REPORT FOR DETAILED LEGEND AND INDEX MAP FOR FIRM PANEL LAYOUT

- **SPECIAL FLOOD HAZARD AREAS**
  - Without Base Flood Elevation (BFE) — Zone A, V, A99
  - With BFE or Depth — Zone AE, AO, AH, VE, AR
  - Regulatory Floodway
- **OTHER AREAS OF FLOOD HAZARD**
  - 0.2% Annual Chance Flood Hazard, Areas of 1% annual chance flood with average depth less than one foot or with drainage areas of less than one square mile — Zone X
  - Future Conditions 1% Annual Chance Flood Hazard — Zone X
  - Area with Reduced Flood Risk due to Levee. See Notes. — Zone X
  - Area with Flood Risk due to Levee — Zone D
- **OTHER AREAS**
  - NO SCREEN — Area of Minimal Flood Hazard — Zone X
  - Effective LOMRs
  - Area of Undetermined Flood Hazard — Zone D
- **GENERAL STRUCTURES**
  - Channel, Culvert, or Storm Sewer
  - Levee, Dike, or Floodwall
- **OTHER FEATURES**
  - 20.2 / 17.5 — Cross Sections with 1% Annual Chance Water Surface Elevation
  - Coastal Transect
  - Base Flood Elevation Line (BFE)
  - Limit of Study
  - Jurisdiction Boundary
  - Coastal Transect Baseline
  - Profile Baseline
  - Hydrographic Feature
- **MAP PANELS**
  - Digital Data Available
  - No Digital Data Available
  - Unmapped

The pin displayed on the map is an approximate point selected by the user and does not represent an authoritative property location.

This map complies with FEMA's standards for the use of digital flood maps if it is not void as described below. The basemap shown complies with FEMA's basemap accuracy standards

The flood hazard information is derived directly from the authoritative NFHL web services provided by FEMA. This map was exported on 10/21/2022 at 12:28 PM and does not reflect changes or amendments subsequent to this date and time. The NFHL and effective information may change or become superseded by new data over time.

This map image is void if the one or more of the following map elements do not appear: basemap imagery, flood zone labels, legend, scale bar, map creation date, community identifiers, FIRM panel number, and FIRM effective date. Map images for unmapped and unmodernized areas cannot be used for regulatory purposes.

FLOODPLAIN MANAGEMENT OFFICE

APPROVED

ILMS # 26023603

Development Permit #: 26-1091

Date: 03/20/2026 **By:** Juan R. Diaz Ortiz

NO.	DATE	REVISION	APP.

ARCADIS
Infrastructure · Water · Environment · Buildings
1330 Post Oak Blvd, Suite 2250
Houston, TX 77056
Tel: 713-953-4800
Fax: 713-977-4620
www.arcadis.com
Texas Registered Engineering Firm F-533

SURVEYED BY: AMANI ENGR.
FB NO. P-6335

STATE OF TEXAS · DAVID F. RIDGWAY · 105134 · LICENSED PROFESSIONAL ENGINEER · 11/20/2025

CITY OF HOUSTON

HOUSTON PUBLIC WORKS

LIFT STATION REHABILITATION & RECONSTRUCTION CONSENT DECREE

FLOODPLAIN MAPS-II

G-15

WBS NUMBER	FOR CITY OF HOUSTON USE ONLY
R-000267-0175-4	
DRAWING SCALE	
AS NOTED	
CITY OF HOUSTON PM	
NP NAWARAJ PANTA, P.E.	
SHEET NO. 15 OF 312	

FILE PATH: C:\Users\omessan\DC\ACCDocs\Arcadis ACC US\AUS-30126616-Lift Station Rehab And Reconstruct CMAR\Project Files\10_WIP\10T Main PJ Folder\10T_GEN_General\15-Floodplain Maps-II.dwg
PLOT STYLE: COH.ctb PLOTTED: 11/17/2025 1:17 PM

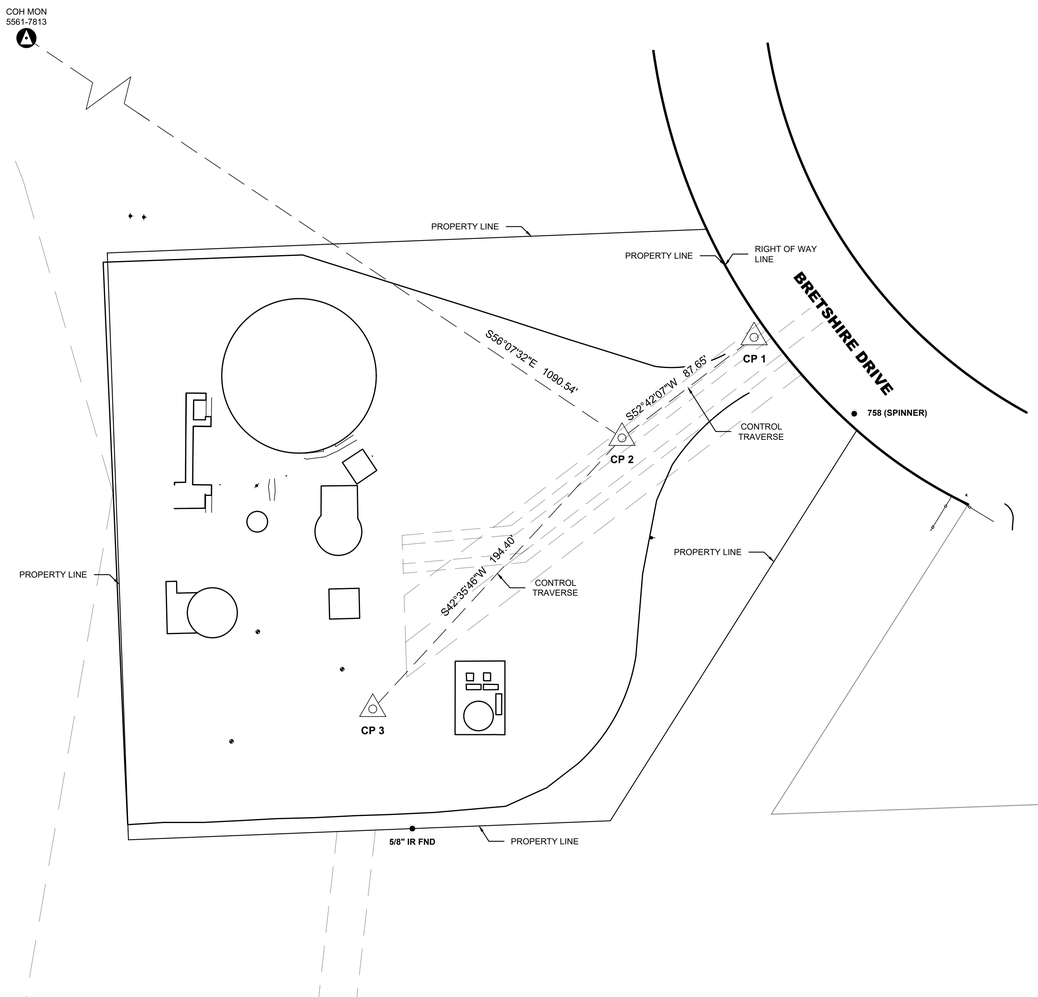

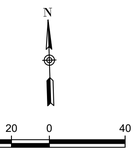

SCALE IN FEET

22 X 34 : 1" = 40'
11 X 17 : 1" = 80'

NO.	DATE	REVISION	APP.
1	10/31/25	COH COMMENTS	WHR

POINT	GRID NORTHING	GRID EASTING	ELEVATION	DESCRIPTION
1	13876872.59	3140386.43	47.04	X-Cut
2	13876819.48	3140316.70	47.24	X-Cut
3	13876676.38	3140185.14	47.77	X-Cut

CITY OF HOUSTON

CITY SURVEY 5561-7813
SITE CONTROL MONUMENT
FLOODPLAIN RM#150300

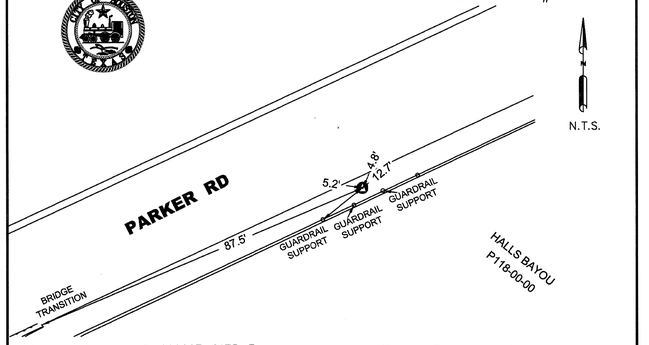

Project WBS# R-000267-0175-3
Texas Coordinate System of 1983,
South Central Zone, U. S. Survey Feet
X= 3,139,411.36
Y= 13,877,427.26

Lat.= N 29° 22' 22.9887"
Lon.= W 95° 18' 19.5305"

Keymap Page: 454D
Orthometric Elevation = 48.92
Ellipsoid Height= -40.88
Geoid: GEOID 18
Datum Source & Adjustment:
2-HR STATIC GPS OBSERVATION
MADE ON MONUMENT ON 08/05/2024

Reference Frame Used: NAD_83(2011)(EPOCH: 2010.0000)
Vertical Adjustment used: NAVD 88 GEOID18
General Location: LOCATED ON THE SOUTHSIDE OF BRIDGE ON PARKER ROAD, APPROXIMATELY 640 FEET SOUTHWEST OF BRETSHIRE ROAD INTERSECTION.

Date Set: MAY 14, 2003 Type of Mark: BRASS DISK

3 Nearest project control points (bearings and distances stated below):
1. CP #3, X-CUT, S 45° 51' 39" E, 1078.32'
2. CP #2, X-CUT, S 56° 07' 32" E, 1090.54'
3. CP #1, X-CUT, S 60° 21' 59" E, 1121.90'

NOTE:
1. Bearings are grid bearings.
2. Combined Factor (C.F)= 0.99990649.

Surface= Grid
C.F.

Surveyed By: Amani Engineering, Inc.
11011 Richmond Avenue, Suite 700
Houston, TX 77042
Tel. (713)270-5700
Texas Registered Survey Firm 10028200

STATE OF TEXAS REGISTERED CHRISTINA I. WEAVER 6753 PROFESSIONAL LAND SURVEYOR 12.10.24

P:\Cadd\2023\23020-Arcadis COH MAR\Monuments\Bretshire #1\5561-7813.dwg

CP 1 -- X-CUT

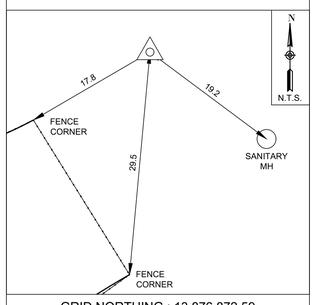

GRID NORTHING : 13,876,872.59
GRID EASTING : 3,140,386.43

CP 2 -- X-CUT

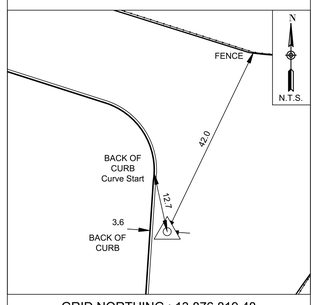

GRID NORTHING : 13,876,819.48
GRID EASTING : 3,140,316.70

CP 3 -- X-CUT

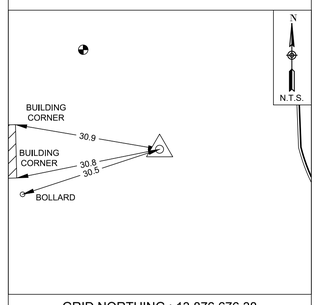

GRID NORTHING : 13,876,676.38
GRID EASTING : 3,140,185.14

NOTES:

1. ALL BEARINGS AND COORDINATES ARE BASED ON THE TEXAS COORDINATE SYSTEM, SOUTH CENTRAL ZONE (4204) NORTH AMERICAN DATUM OF 1983 (2011 ADJ) 2010 EPOCH. COORDINATES SHOWN HEREON ARE GRID VALUES AND ALL DISTANCES SHOWN ARE SURFACE VALUES. THE HCFCD PUBLISHED COMBINED SCALE FACTOR IS 0.99990648.
2. GRID COORDINATES/SCALE FACTOR = SURFACE COORDINATES.
3. FIELD DATA COLLECTED AUGUST 2024.
4. ALL ELEVATIONS SHOWN HEREON ARE REFERENCED TO THE NORTH AMERICAN VERTICAL DATUM OF 1988 (NAVD88) GEOID 99. ALL CONTROL NETWORK ELEVATIONS ARE TIED TO HCFCD FLOOD PLAIN RM 150300 USING DIFFERENTIAL LEVELING. CALL ELEVATION = 48.86'.
5. THE CONVERSION FACTOR FROM PROJECT (CALLED GEOID 99) ELEVATION TO THE CITY OF HOUSTON (OBSERVED GEOID 18) ELEVATION = 0.06'.

PROJECT BENCH MARK:

STATIC GPS OBSERVATION MADE ON CITY OF HOUSTON MONUMENT 5561-7813 08/05/2024. A BRASS DISK LOCATED ON THE SOUTH SIDE OF BRIDGE ON PARKER ROAD, APPROXIMATELY 640 FEET SOUTHWEST OF BRETSHIRE ROAD INTERSECTION ELEVATION = 48.92' (NAVD 88 GEOID 18)

AMANI ENGINEERING, INC.
11011 RICHMOND AVENUE, SUITE 700
HOUSTON, TEXAS 77042
TEL: (713) 270-5700
Texas Registered Engineering Firm No. F-4528
Texas Registered Surveying Firm No.100282-00

SURVEYED BY: AMANI
FB NO. P-6335

STATE OF TEXAS REGISTERED WILLIAM H. REIMER III 4044 PROFESSIONAL LAND SURVEYOR
William H. Reimer III 10-31-2025

CITY OF HOUSTON
HOUSTON PUBLIC WORKS

SURVEY CONTROL MAP

LIFT STATION CMAR PROJECT

BRETSHIRE

WBS NUMBER	FOR CITY OF HOUSTON USE ONLY
R-000267-0175-4	
DRAWING SCALE	
1" = 20'	
CITY OF HOUSTON PM	
NP NAWARAJ PANTA, P.E.	
SHEET NO. 16 OF 312	

FILE PATH: P:\Cadd\2023\23020-Arcadis COH MAR\CAD_DWG\Survey Control Drawings\Control-Bretshire-23020.dwg

0 1 2 3 ORIGINAL SCALE IN INCHES FOR REDUCED PLANS

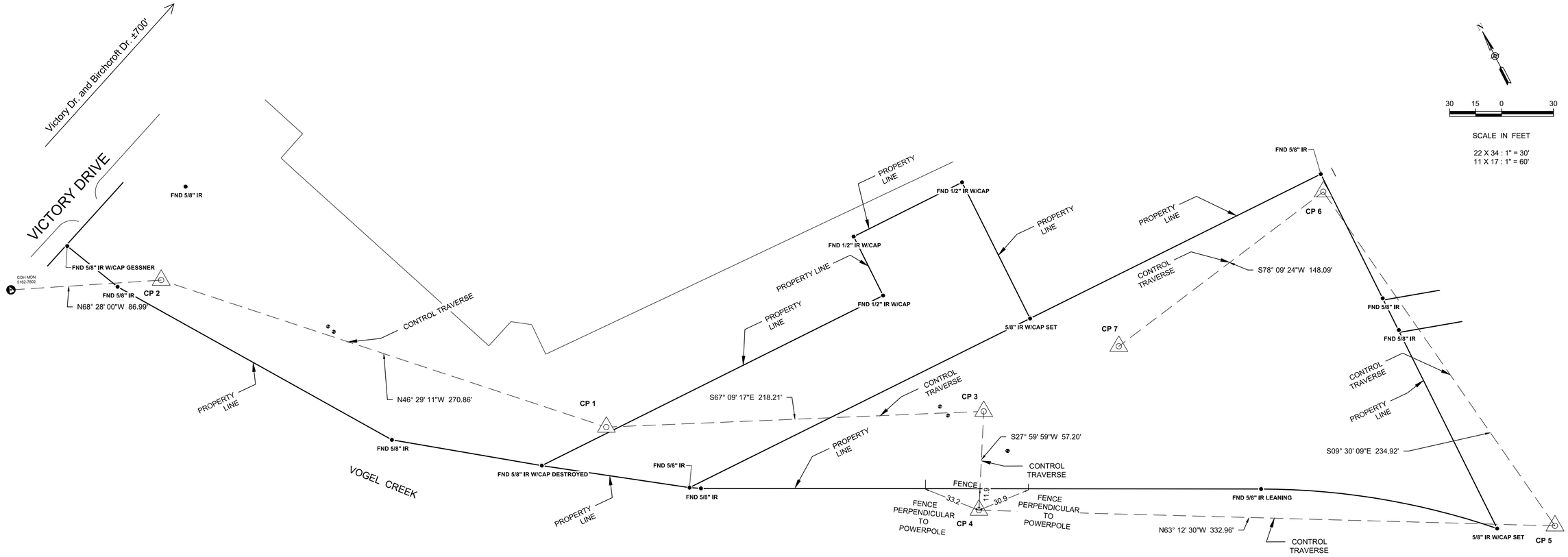

NO.	DATE	REVISION	APP.
1	10/31/25	COH COMMENTS	WHR

NOTES:

1. ALL BEARINGS AND COORDINATES ARE BASED ON THE TEXAS COORDINATE SYSTEM, SOUTH CENTRAL ZONE (4204) NORTH AMERICAN DATUM OF 1983 (2011 ADJ) 2010 EPOCH. COORDINATES SHOWN HEREON ARE GRID VALUES AND ALL DISTANCES SHOWN ARE SURFACE VALUES. THE HCFCD PUBLISHED COMBINED SCALE FACTOR IS 0.99990712.
2. GRID COORDINATES/SCALE FACTOR = SURFACE COORDINATES.
3. FIELD DATA COLLECTED AUGUST 2024.
4. ALL ELEVATIONS SHOWN HEREON ARE REFERENCED TO THE NORTH AMERICAN VERTICAL DATUM OF 1988 (NAVD88) GEOID 99. ALL CONTROL NETWORK ELEVATIONS ARE TIED TO HCFCD FLOOD PLAIN RM 050338 USING DIFFERENTIAL LEVELING. CALL ELEVATION = 75.11'.
5. THE CONVERSION FACTOR FROM PROJECT (CALLED GEOID 99) ELEVATION TO THE CITY OF HOUSTON (OBSERVED GEOID 18) ELEVATION = - 0.27'.

PROJECT BENCH MARK:

STATIC GPS OBSERVATION OF CITY OF HOUSTON MONUMENT 5162-7802 MADE ON 08/02/2024. A BRASS DISK LOCATED ON THE SOUTHSIDE OF BRIDGE ON VICTORY DRIVE APPROXIMATELY 0.23 MILES NORTHEAST OF ANTOINE DRIVE.
ELEVATION =74.84' (NAVD 88 GEOID 18)

AMANI ENGINEERING, INC.
11011 RICHMOND AVENUE, SUITE 700
HOUSTON, TEXAS 77042
TEL: (713) 270-5700
Texas Registered Engineering Firm No. F-4528
Texas Registered Surveying Firm No.100282-00

SURVEYED BY: AMANI
FB NO. P-6335

STATE OF TEXAS REGISTERED WILLIAM H. REIMER III 4044 PROFESSIONAL LAND SURVEYOR
William H. Reimer III 10-31-2025

CITY OF HOUSTON
HOUSTON PUBLIC WORKS

SURVEY CONTROL MAP
LIFT STATION CMAR PROJECT

CHERRY OAK
SHEET 1 OF 2

WBS NUMBER	FOR CITY OF HOUSTON USE ONLY
R-000267-0175-4	
DRAWING SCALE	
1" = 30'	
CITY OF HOUSTON PM	
NP NAWARAJ PANTA, P.E.	
SHEET NO. 17 OF 312	

FILE PATH: P:\Cadd\2023\23020-Arcadis COH MAR\CAD_DWG\Survey Control Drawings\Control-CherryOak-23020.dwg

0 1 2 3 ORIGINAL SCALE IN INCHES FOR REDUCED PLANS

CP 1 -- X-CUT

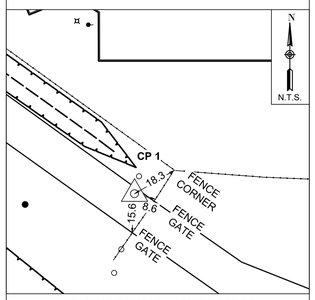

GRID NORTHING : 13,879,868.30
GRID EASTING : 3,087,650.80

CP 2 -- X-CUT

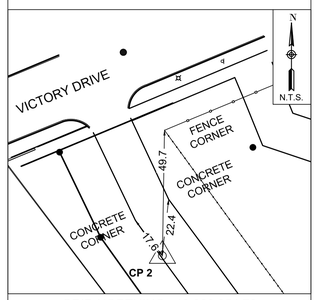

GRID NORTHING : 13,880,054.78
GRID EASTING : 3,087,454.39

CP 3 -- X-CUT

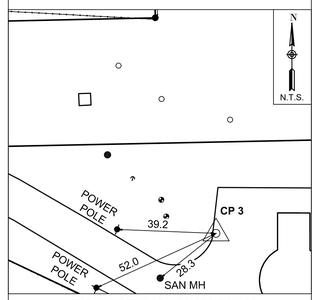

GRID NORTHING : 13,879,783.60
GRID EASTING : 3,087,851.87

CP 4 -- 5/8" IR w/CAP

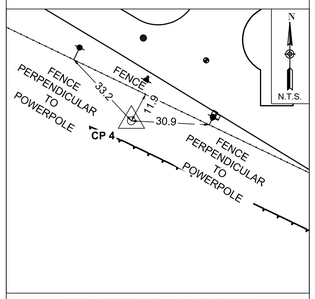

GRID NORTHING : 13,879,733.09
GRID EASTING : 3,087,825.02

CP 5 -- 5/8" IR w/CAP

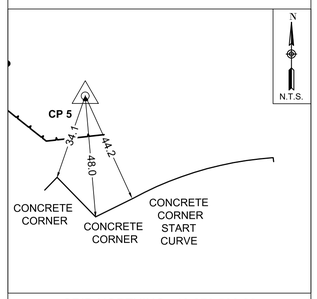

GRID NORTHING : 13,879,583.03
GRID EASTING : 3,088,122.20

CP 6 -- 5/8" IR w/CAP

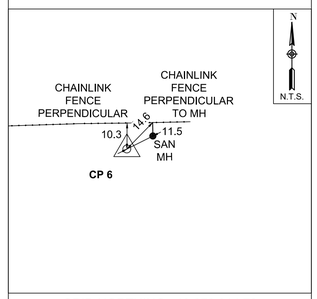

GRID NORTHING : 13,879,814.70
GRID EASTING : 3,088,083.42

CP 7 -- 5/8" IR w/CAP

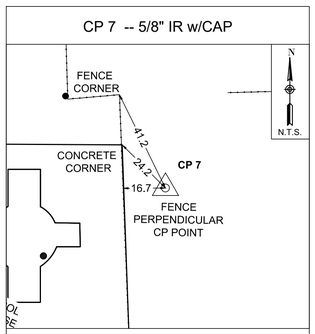

GRID NORTHING : 13,879,784.31
GRID EASTING : 3,087,938.50

POINT	GRID NORTHING	GRID EASTING	ELEVATION	DESCRIPTION
1	13,879,868.30	3,087,650.80	72.69	X-CUT
2	13,880,054.78	3,087,454.39	75.16	X-CUT
3	13,879,783.60	3,087,851.87	73.50	X-CUT
4	13,879,733.09	3,087,825.02	73.05	5/8" IR w/CAP
5	13,879,583.03	3,088,122.20	73.13	5/8" IR w/CAP
6	13,879,814.70	3,088,083.42	73.43	5/8" IR w/CAP
7	13,879,784.31	3,087,938.50	73.51	5/8" IR w/CAP

CITY OF HOUSTON

CITY SURVEY 5162-7802
SITE CONTROL MONUMENT
FLOODPLAIN RM#050338

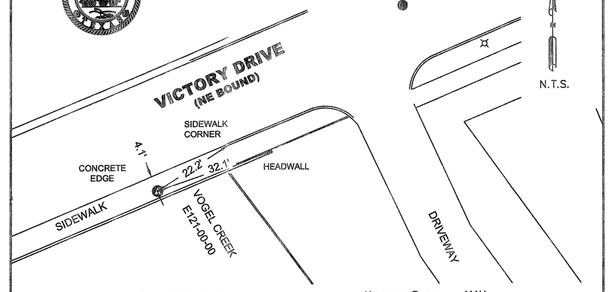

Project WBS# R-000267-0175-3
Texas Coordinate System of 1983, South Central Zone, U. S. Survey Feet
X= 3,087,373.47
Y= 13,880,086.71
Lat.= N 29° 52' 5.2149"
Lon.= W 95° 28' 9.3535"

Keymap Page: 411U
Orthometric Elevation = 74.84
Ellipsoid Height= -15.22
Geoid: GEOID 18
Datum Source & Adjustment:
2-HR STATIC GPS OBSERVATION
MADE ON MONUMENT ON 08/05/2024

Reference Frame Used: NAD_83(2011)(EPOCH: 2010.0000)
Vertical Adjustment used: NAVD 88 GEOID18
General Location: LOCATED ON THE SOUTHSIDE OF BRIDGE ON VICTORY DRIVE, APPROXIMATELY 0.23 MILE NORTHEAST OF ANTOINE DRIVE INTERSECTION.
Date Set: MAY 2, 2005 Type of Mark: BRASS DISK

3 Nearest project control points (bearings and distances stated below):
1. CP #2, X-CUT, S 68° 28' 00" E, 86.99'
2. CP #1, X-CUT, S 51° 46' 42" E, 353.03'
3. CP #3, X-CUT, S 57° 38' 29" E, 566.39'

NOTE:
1. Bearings are grid bearings.
2. Combined Factor (C.F)= 0.99990714.

Surface= Grid
C.F.

Surveyed By: Amani Engineering, Inc.
11011 Richmond Avenue, Suite 700
Houston, TX 77042
Tel. (713)270-5700
Texas Registered Surveyor Firm 10028200

STATE OF TEXAS REGISTERED CHRISTINA I. WEAVER 6753 PROFESSIONAL LAND SURVEYOR
10.10.24

P:\Cadd\2023\23020-Arcadis COH MAR\Monumentation\Cherry Oak\CofH-5162-7802.dwg

NOTES:

1. ALL BEARINGS AND COORDINATES ARE BASED ON THE TEXAS COORDINATE SYSTEM, SOUTH CENTRAL ZONE (4204) NORTH AMERICAN DATUM OF 1983 (2011 ADJ) 2010 EPOCH. COORDINATES SHOWN HEREON ARE GRID VALUES AND ALL DISTANCES SHOWN ARE SURFACE VALUES. THE HCFCD PUBLISHED COMBINED SCALE FACTOR IS 0.99990712.
2. GRID COORDINATES/SCALE FACTOR = SURFACE COORDINATES.
3. FIELD DATA COLLECTED AUGUST 2024.
4. ALL ELEVATIONS SHOWN HEREON ARE REFERENCED TO THE NORTH AMERICAN VERTICAL DATUM OF 1988 (NAVD88) GEOID 99. ALL CONTROL NETWORK ELEVATIONS ARE TIED TO HCFCD FLOOD PLAIN RM 050338 USING DIFFERENTIAL LEVELING. CALL ELEVATION = 75.11'.
5. THE CONVERSION FACTOR FROM PROJECT (CALLED GEOID 99) ELEVATION TO THE CITY OF HOUSTON (OBSERVED GEOID 18) ELEVATION = - 0.27'.

PROJECT BENCH MARK:

STATIC GPS OBSERVATION OF CITY OF HOUSTON MONUMENT 5162-7802 MADE ON 08/02/2024. A BRASS DISK LOCATED ON THE SOUTHSIDE OF BRIDGE ON VICTORY DRIVE APPROXIMATELY 0.23 MILES NORTHEAST OF ANTOINE DRIVE.
ELEVATION =74.84' (NAVD 88 GEOID 18)

NO.	DATE	COH COMMENTS REVISION	APP.
1	10/31/25		WHR

AMANI ENGINEERING, INC.
11011 RICHMOND AVENUE, SUITE 700
HOUSTON, TEXAS 77042
TEL: (713) 270-5700
Texas Registered Engineering Firm No. F-4528
Texas Registered Surveying Firm No.100282-00

SURVEYED BY: AMANI
FB NO. P-6335

STATE OF TEXAS REGISTERED WILLIAM H. REINER III 6044 PROFESSIONAL LAND SURVEYOR
10-31-2025

CITY OF HOUSTON
HOUSTON PUBLIC WORKS

SURVEY CONTROL MAP
LIFT STATION CMAR PROJECT

CHERRY OAK
SHEET 2 0F 2

WBS NUMBER	FOR CITY OF HOUSTON USE ONLY
R-000267-0175-4	
DRAWING SCALE	
N.T.S.	
CITY OF HOUSTON PM	
NP NAWARAJ PANTA, P.E.	
SHEET NO. 18 OF 312	

FILE PATH: P:\Cadd\2023\23020-Arcadis COH MAR\CAD_DWG\Survey Control Drawings\Control-CherryOak-23020.dwg

0 1 2 3 ORIGINAL SCALE IN INCHES FOR REDUCED PLANS

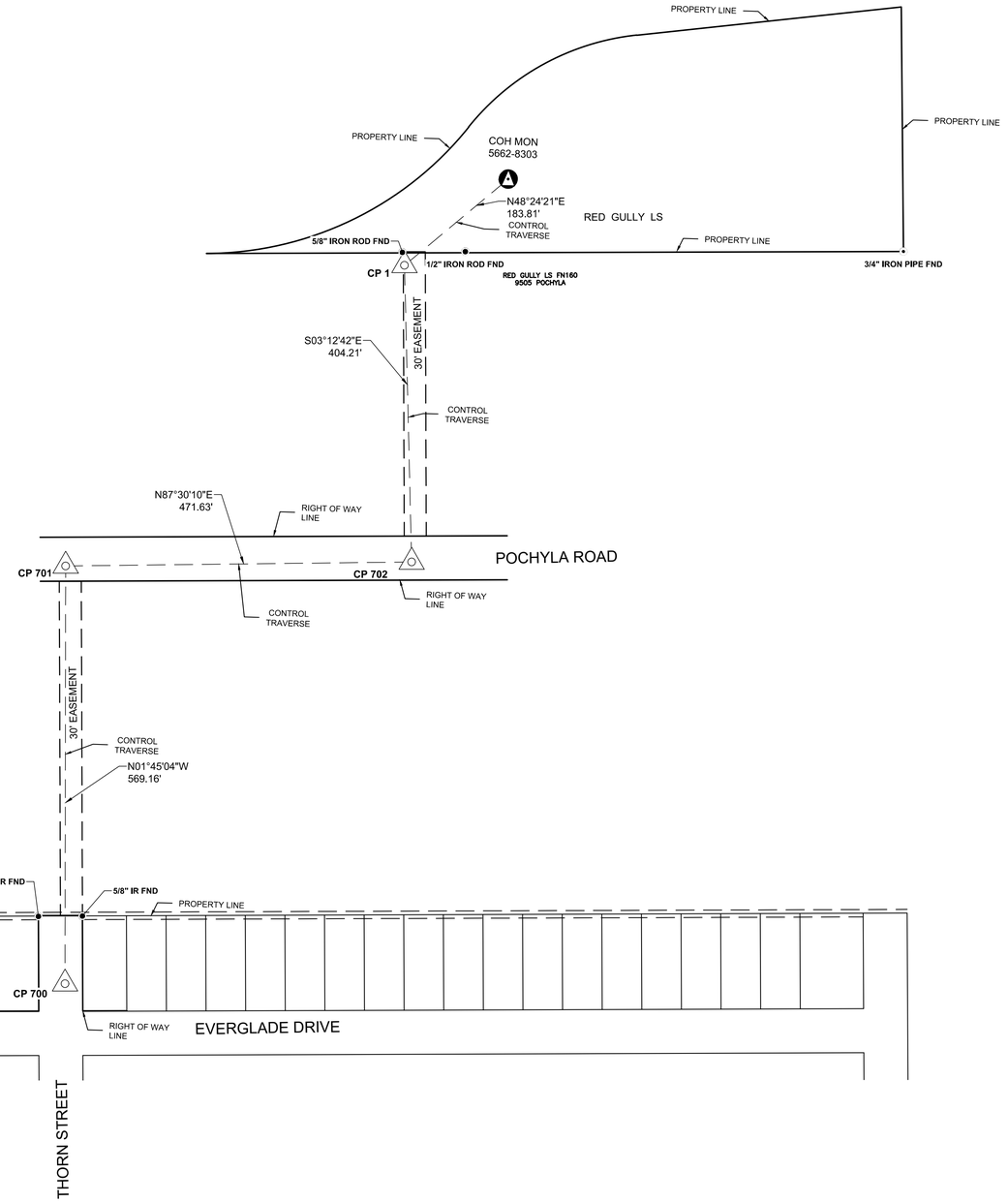

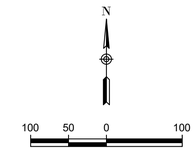

NO.	DATE	REVISION	APP.
1	10/31/25	COH COMMENTS	WHR

NOTES:

1. ALL BEARINGS AND COORDINATES ARE BASED ON THE TEXAS COORDINATE SYSTEM, SOUTH CENTRAL ZONE (4204) NORTH AMERICAN DATUM OF 1983 (2011 ADJ) 2010 EPOCH. COORDINATES SHOWN HEREON ARE GRID VALUES AND ALL DISTANCES SHOWN ARE SURFACE VALUES. THE HCFCD PUBLISHED COMBINED SCALE FACTOR IS 0.99990774.
2. GRID COORDINATES/SCALE FACTOR = SURFACE COORDINATES.
3. FIELD DATA COLLECTED AUGUST 2024.
4. ALL ELEVATIONS SHOWN HEREON ARE REFERENCED TO THE NORTH AMERICAN VERTICAL DATUM OF 1988 (NAVD88) GEOID 99. ALL CONTROL NETWORK ELEVATIONS ARE TIED TO HCFCD FLOOD PLAIN RM 150410 USING DIFFERENTIAL LEVELING. CALL ELEVATION = 46.98'.
5. THE CONVERSION FACTOR FROM PROJECT (CALLED GEOID 99) ELEVATION TO THE CITY OF HOUSTON (OBSERVED GEOID 18) ELEVATION = 0.03'.

PROJECT BENCH MARK:

STATIC GPS OBSERVATION OF CITY OF HOUSTON MONUMENT 5662-8303 MADE ON 08/14/2024. A STEEL PIN LOCATED ABOUT 80 FEET NORTH EAST OF LIFT STATION AT SITE.
ELEVATION = 47.01' (NAVD 88 GEOID 18)

AMANI ENGINEERING, INC.
11011 RICHMOND AVENUE, SUITE 700
HOUSTON, TEXAS 77042
TEL: (713) 270-5700
Texas Registered Engineering Firm No. F-4528
Texas Registered Surveying Firm No.100282-00

SURVEYED BY: AMANI
FB NO. P-6335

STATE OF TEXAS REGISTERED WILLIAM H. REIMER III 4044 PROFESSIONAL LAND SURVEYOR
William H. Reimer III 10-31-2025

CITY OF HOUSTON
HOUSTON PUBLIC WORKS

SURVEY CONTROL MAP
LIFT STATION CMAR PROJECT

RED GULLY
SHEET 1 OF 2

WBS NUMBER	FOR CITY OF HOUSTON USE ONLY
R-000267-0175-4	
DRAWING SCALE	
1" = 100'	
CITY OF HOUSTON PM	
NP NAWARAJ PANTA, P.E.	
SHEET NO. 19 OF 312	

FILE PATH: P:\Cadd\2023\23020-Arcadis COH MAR\CAD_DWG\Survey Control Drawings\Control-Red Gully-23020.dwg

0 1 2 3 ORIGINAL SCALE IN INCHES FOR REDUCED PLANS

CITY OF HOUSTON

CITY SURVEY 5662-8303
SITE CONTROL MONUMENT
FLOODPLAIN RM#150410

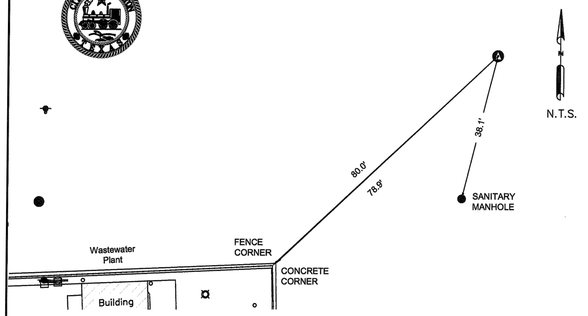

Project WBS# R-000267-0175-3
Texas Coordinate System of 1983,
South Central Zone, U. S. Survey Feet
X= 3,157,042.04
Y= 13,880,658.35

Lat.= N 29° 51' 49.4049"
Lon.= W 95° 14' 58.2219"

Keymap Page: 416W
Orthometric Elevation = 47.01
Ellipsoid Height= -42.74
Geoid: GEOID 18
Datum Source & Adjustment:
2-HR STATIC GPS OBSERVATION
MADE ON MONUMENT ON 08/14/2024

Reference Frame Used: NAD_83(2011)(EPOCH: 2010.0000)
Vertical Adjustment used: NAVD 88 GEOID18
General Location: LOCATED 0.25 MILE NORTHEAST OF EVERGLADE DR AND THORN ST INTERSECTION, APPROXIMATELY 80 FEET FROM NORTHEAST CORNER OF THE WASTEWATER PLANT.

Date Set: MAY 14, 2003 Type of Mark: ALUMINUM ROD

3 Nearest project control points (bearings and distances stated below):
1. CP #1, 5/8" IRON ROD CAPPED 'AMANI', S 48° 24' 21" W, 183.81'
2. CP #702, MAG NAIL, S 12° 19' 23" W, 538.00'
3. CP #701, MAG NAIL, S 47° 00' 58" W, 801.05'

NOTE:
1. Bearings are grid bearings.
2. Combined Factor (C.F)= 0.99990775.

Surface= Grid / C.F.

Surveyed By: Amani Engineering, Inc.
11011 Richmond Avenue, Suite 700
Houston, TX 77042
Tel. (713)270-5700
Texas Registered Survey Firm 10028200

STATE OF TEXAS REGISTERED CHRISTINA I. WEAVER 6753 PROFESSIONAL LAND SURVEYOR
11.19.24

P:\Cadd\2023\23020-Arcadis COH MAR\Monuments\Red Gully\CofH-Red Gully-5662-8303.dwg

POINT	GRID NORTHING	GRID EASTING	ELEVATION	DESCRIPTION
1	13,880,536.34	3,156,904.58	46.49	5/8" IR w/CAP
700	13,879,543.41	3,156,473.47	48.17	MAG NAIL
701	13,880,112.25	3,156,456.08	47.75	MAG NAIL
702	13,880,132.80	3,156,927.23	48.10	MAG NAIL

CP 1 -- 5/8" IR w/CAP

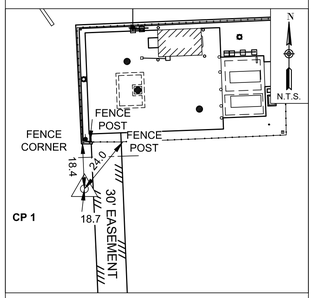

GRID NORTHING : 13,880,536.34
GRID EASTING : 3,156,904.58

CP 700 -- MAG NAIL

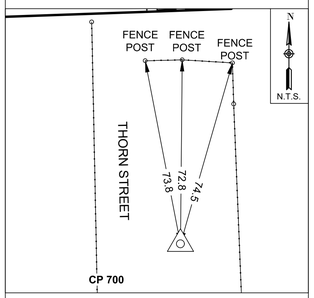

GRID NORTHING : 13,879,543.41
GRID EASTING : 3,156,473.47

CP 701 -- MAG NAIL

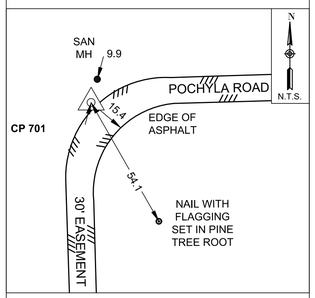

GRID NORTHING : 13,880,112.25
GRID EASTING : 3,156,456.08

CP 702 -- MAG NAIL

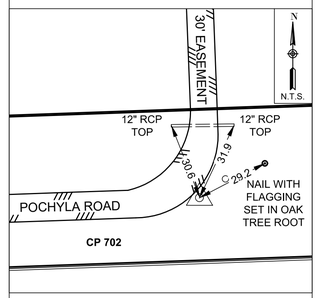

GRID NORTHING : 13,880,132.80
GRID EASTING : 3,156,927.23

NOTES:

1. ALL BEARINGS AND COORDINATES ARE BASED ON THE TEXAS COORDINATE SYSTEM, SOUTH CENTRAL ZONE (4204) NORTH AMERICAN DATUM OF 1983 (2011 ADJ) 2010 EPOCH. COORDINATES SHOWN HEREON ARE GRID VALUES AND ALL DISTANCES SHOWN ARE SURFACE VALUES. THE HCFCD PUBLISHED COMBINED SCALE FACTOR IS 0.99990774.
2. GRID COORDINATES/SCALE FACTOR = SURFACE COORDINATES.
3. FIELD DATA COLLECTED AUGUST 2024.
4. ALL ELEVATIONS SHOWN HEREON ARE REFERENCED TO THE NORTH AMERICAN VERTICAL DATUM OF 1988 (NAVD88) GEOID 99. ALL CONTROL NETWORK ELEVATIONS ARE TIED TO HCFCD FLOOD PLAIN RM 150410 USING DIFFERENTIAL LEVELING. CALL ELEVATION = 46.98'.
5. THE CONVERSION FACTOR FROM PROJECT (CALLED GEOID 99) ELEVATION TO THE CITY OF HOUSTON (OBSERVED GEOID 18) ELEVATION = 0.03'.

PROJECT BENCH MARK:

STATIC GPS OBSERVATION OF CITY OF HOUSTON MONUMENT 5662-8303 MADE ON 08/14/2024. A STEEL PIN LOCATED ABOUT 80 FEET NORTH EAST OF LIFT STATION AT SITE.
ELEVATION = 47.01' (NAVD 88 GEOID 18)

NO.	DATE	REVISION	APP.
1	10/31/25	COH COMMENTS	WHR

AMANI ENGINEERING, INC.
11011 RICHMOND AVENUE, SUITE 700
HOUSTON, TEXAS 77042
TEL: (713) 270-5700
Texas Registered Engineering Firm No. F-4528
Texas Registered Surveying Firm No.100282-00

SURVEYED BY: AMANI
FB NO. P-6335

STATE OF TEXAS REGISTERED WILLIAM H. REIMER III 4044 PROFESSIONAL LAND SURVEYOR
10-31-2025

CITY OF HOUSTON
HOUSTON PUBLIC WORKS

SURVEY CONTROL MAP

LIFT STATION CMAR PROJECT

RED GULLY
SHEET 2 OF 2

WBS NUMBER	FOR CITY OF HOUSTON USE ONLY
R-000267-0175-4	
DRAWING SCALE	
N.T.S.	
CITY OF HOUSTON PM	
NP NAWARAJ PANTA, P.E.	
SHEET NO. 20 OF 312	

FILE PATH: P:\Cadd\2023\23020-Arcadis COH MAR\CAD_DWG\Survey Control Drawings\Control-Red Gully-23020.dwg

0 1 2 3 ORIGINAL SCALE IN INCHES FOR REDUCED PLANS

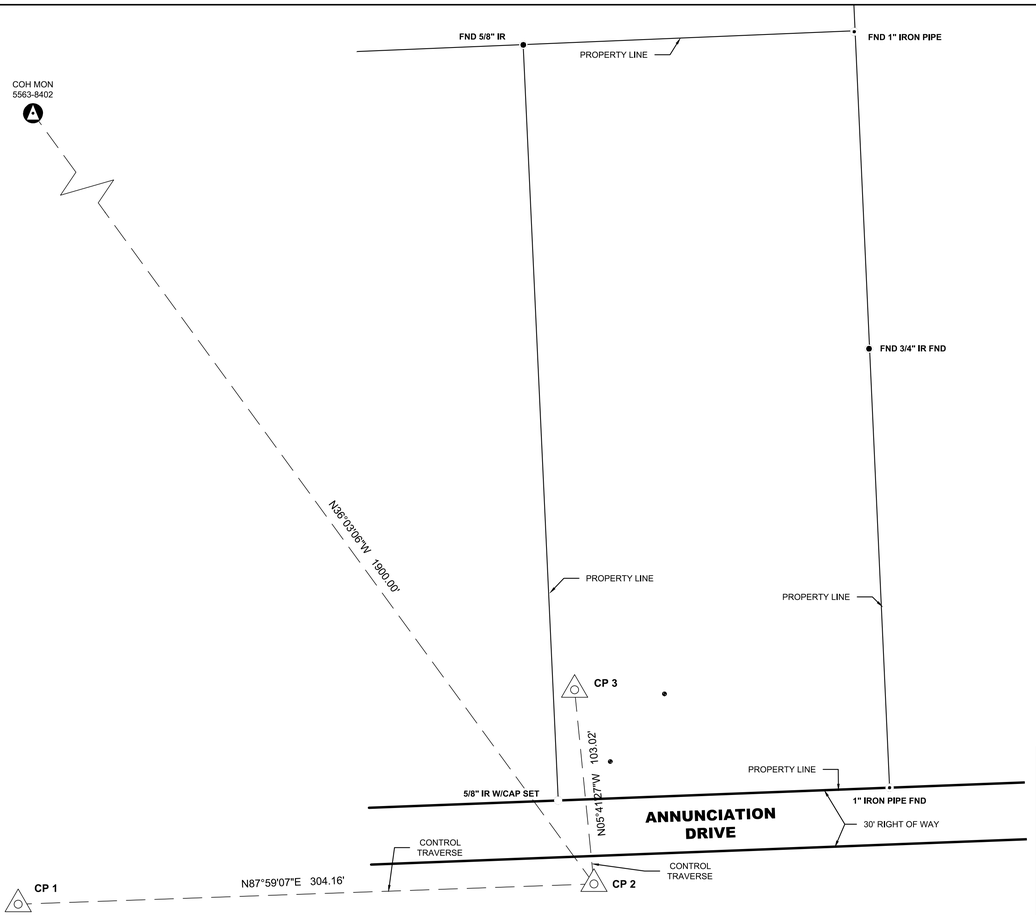

N

40 20 0 40

SCALE IN FEET

22 X 34 : 1" = 40'
11 X 17 : 1" = 80'

NO.	DATE	REVISION	APP.

NOTES:

1. ALL BEARINGS AND COORDINATES ARE BASED ON THE TEXAS COORDINATE SYSTEM, SOUTH CENTRAL ZONE (4204) NORTH AMERICAN DATUM OF 1983 (2011 ADJ) 2010 EPOCH. COORDINATES SHOWN HEREON ARE GRID VALUES AND ALL DISTANCES SHOWN ARE SURFACE VALUES. THE HCFCD PUBLISHED COMBINED SCALE FACTOR IS 0.99991080.
2. GRID COORDINATES/SCALE FACTOR = SURFACE COORDINATES.
3. FIELD DATA COLLECTED AUGUST 2024.
4. ALL ELEVATIONS SHOWN HEREON ARE REFERENCED TO THE NORTH AMERICAN VERTICAL DATUM OF 1988 (NAVD88) GEOID 99. ALL CONTROL NETWORK ELEVATIONS ARE TIED TO HCFCD FLOOD PLAIN RM 150445 USING DIFFERENTIAL LEVELING. CALL ELEVATION = 64.20'.
5. THE CONVERSION FACTOR FROM PROJECT (CALLED GEOID 99) ELEVATION TO THE CITY OF HOUSTON (OBSERVED GEOID 18) ELEVATION = - 0.24'.

PROJECT BENCH MARK:

STATIC GPS OBSERVATION OF CITY OF HOUSTON MONUMENT 5563-8402 MADE ON 08/01/2024. A BRASS DISK LOCATED ON THE WEST SIDE OF BRIDGE ON SUBURBAN STREET, APPROXIMATELY 0.24 MILE SOUTH OF MT. HOUSTON ROAD INTERSECTION ELEVATION = 63.96' (NAVD 88 GEOID 18)

CP 1 -- MAG NAIL

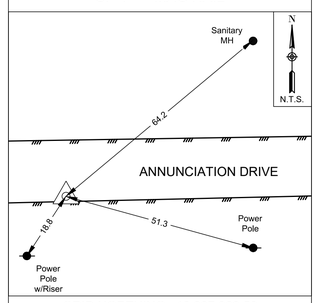

GRID NORTHING : 13,887,320.53
GRID EASTING : 3,145,460.93

CP 2 -- MAG NAIL

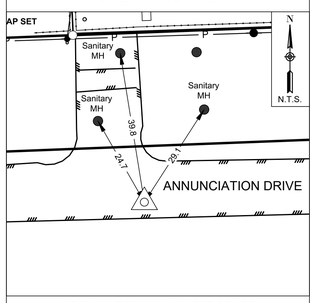

GRID NORTHING : 13,887,331.22
GRID EASTING : 3,145,764.88

CP 3 -- X-CUT

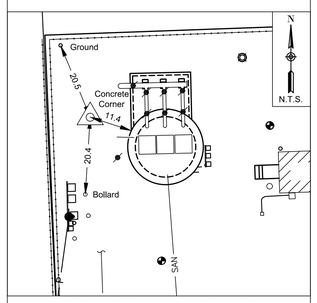

GRID NORTHING : 13,887,433.72
GRID EASTING : 3,145,754.67

POINT	GRID NORTHING	GRID EASTING	ELEVATION	DESCRIPTION
1	13,887,320.53	3,145,460.93	61.35	Mag Nail
2	13,887,331.22	3,145,764.88	60.04	Mag Nail
3	13,887,433.72	3,145,754.67	59.56	X-Cut

CITY OF HOUSTON

CITY SURVEY 5563-8402
SITE CONTROL MONUMENT
FLOODPLAIN RM#150445

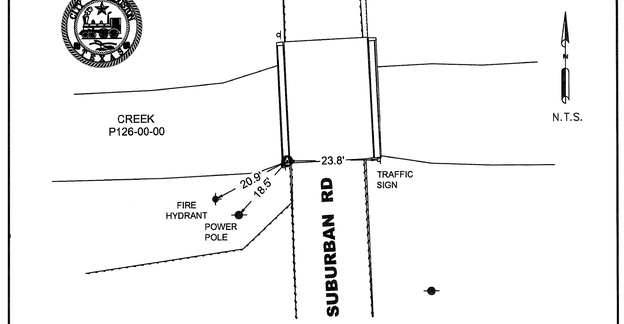

Project WBS# R-000267-0175-3
Texas Coordinate System of 1983,
South Central Zone, U. S. Survey Feet
X= 3,144,646.81
Y= 13,888,867.21

Lat.= N 29° 53' 14.5430"
Lon.= W 95° 17' 15.9771"

Keymap Page: 415N
Orthometric Elevation = 63.96
Ellipsoid Height= -25.88
Geoid: GEOID 18
Datum Source & Adjustment:
2-HR STATIC GPS OBSERVATION
MADE ON MONUMENT ON 08/01/2024

Reference Frame Used: NAD_83(2011)(EPOCH: 2010.0000)
Vertical Adjustment used: NAVD 88 GEOID18
General Location: LOCATED ON THE WESTSIDE OF BRIDGE ON SUBURBAN STREET, APPROXIMATELY 0.24 MILE SOUTH OF MT. HOUSTON ROAD INTERSECTION.
Date Set: MAY 14, 2003 Type of Mark: BRASS DISK
3 Nearest project control points (bearings and distances stated below):
1. CP #1, MAG NAIL, S 27° 45' 39" E, 1748.02'
2. CP #3, X-CUT, S 37° 41' 54" E, 1811.86'
3. CP #2, MAG NAIL, S 36° 03' 06" E, 1900.00'

NOTE:
1. Bearings are grid bearings.
2. Combined Factor (C.F)= 0.99991083.

Surface= Grid / C.F.

Surveyed By: Amani Engineering, Inc.
11011 Richmond Avenue, Suite 700
Houston, TX 77042
Tel. (713)270-5700
Texas Registered Survey Firm 10028200

STATE OF TEXAS REGISTERED CHRISTINA I. WEAVER 6753 PROFESSIONAL LAND SURVEYOR 10.31.24

P:\Cadd\2023\23020-Arcadis COH MAR\Monuments\Annunciation\5563-8402.dwg

AMANI ENGINEERING, INC.
11011 RICHMOND AVENUE, SUITE 700
HOUSTON, TEXAS 77042
TEL: (713) 270-5700
Texas Registered Engineering Firm No. F-4528
Texas Registered Surveying Firm No.100282-00

SURVEYED BY: AMANI
FB NO. P-6335

STATE OF TEXAS REGISTERED WILLIAM H. REIMER III 4044 PROFESSIONAL LAND SURVEYOR
William H. Reimer III
09-25-2025

CITY OF HOUSTON
HOUSTON PUBLIC WORKS

SURVEY CONTROL MAP

LIFT STATION CMAR PROJECT

ANNUNCIATION

WBS NUMBER	FOR CITY OF HOUSTON USE ONLY
R-000267-0175-4	
DRAWING SCALE	
1" = 20'	
CITY OF HOUSTON PM	
NP NAWARAJ PANTA, P.E.	
SHEET NO. 21 OF 312	

FILE PATH: P:\Cadd\2023\23020-Arcadis COH MAR\CAD_DWG\Survey Control Drawings\Control-Annunciation-23020.dwg

0 1 2 3 ORIGINAL SCALE IN INCHES FOR REDUCED PLANS

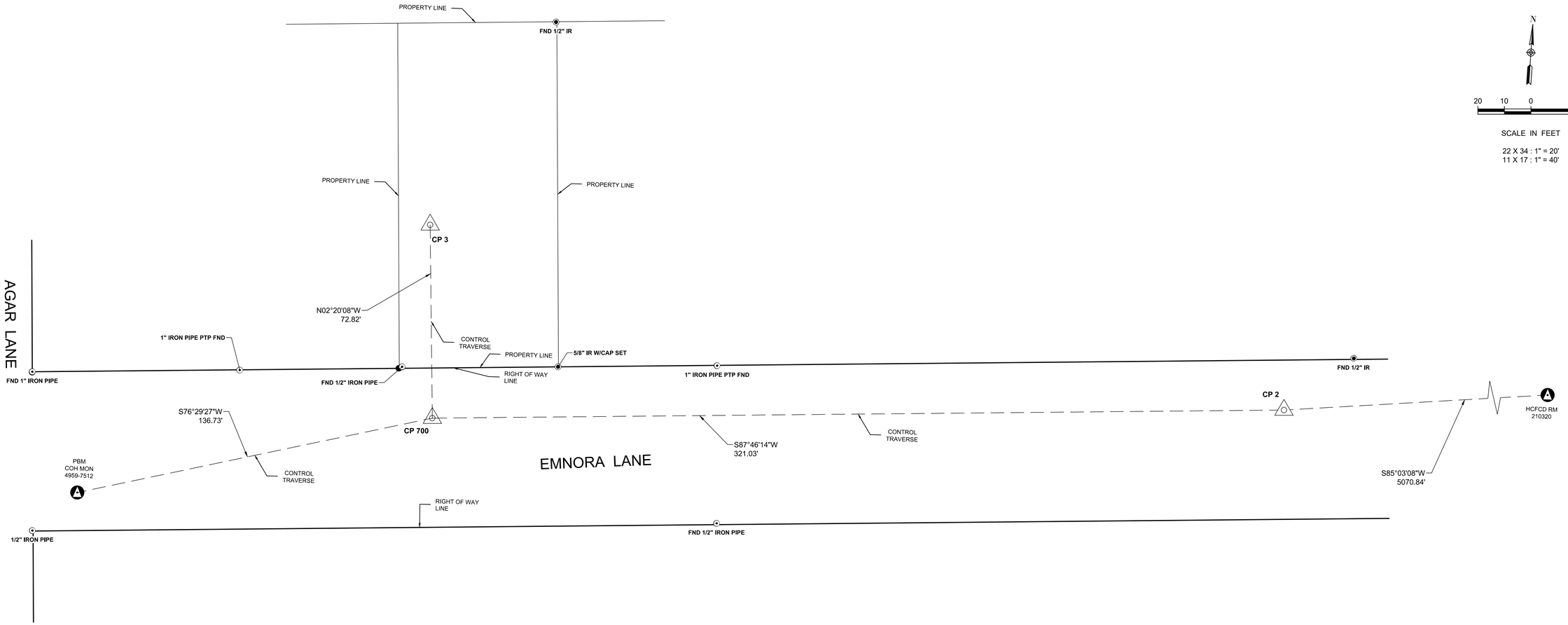

N

20 10 0 20

SCALE IN FEET

22 X 34 : 1" = 20'
11 X 17 : 1" = 40'

NO.	DATE	REVISION	APP.

CP 2 -- MAG NAIL

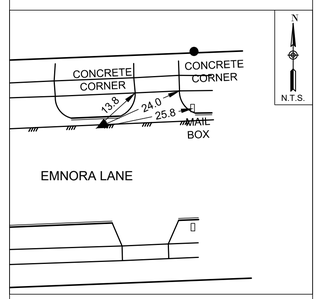

GRID NORTHING : 13,859,960.33
GRID EASTING : 3,058,874.86

CP 3 -- X-CUT

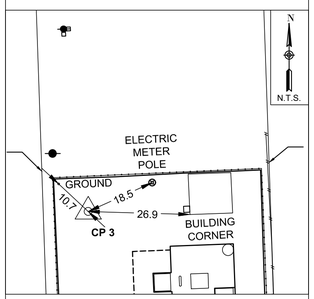

GRID NORTHING : 13,860,020.59
GRID EASTING : 3,058,551.14

CP 700 -- MAG NAIL

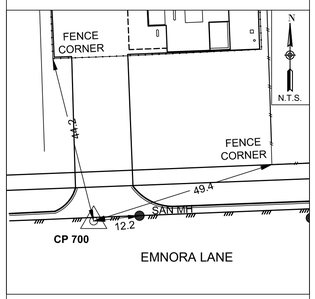

GRID NORTHING : 13,859,947.84
GRID EASTING : 3,058,554.11

NOTES:

1. ALL BEARINGS AND COORDINATES ARE BASED ON THE TEXAS COORDINATE SYSTEM, SOUTH CENTRAL ZONE (4204) NORTH AMERICAN DATUM OF 1983 (2011 ADJ) 2010 EPOCH. COORDINATES SHOWN HEREON ARE GRID VALUES AND ALL DISTANCES SHOWN ARE SURFACE VALUES. THE HCFCD PUBLISHED COMBINED SCALE FACTOR IS 0.99989818.
2. GRID COORDINATES/SCALE FACTOR = SURFACE COORDINATES.
3. FIELD DATA COLLECTED AUGUST 2024.
4. ALL ELEVATIONS SHOWN HEREON ARE REFERENCED TO THE NORTH AMERICAN VERTICAL DATUM OF 1988 (NAVD88) GEOID 99. ALL CONTROL NETWORK ELEVATIONS ARE TIED TO HCFCD FLOOD PLAIN RM 210320 USING DIFFERENTIAL LEVELING. CALL ELEVATION = 93.69'.
5. THE CONVERSION FACTOR FROM PROJECT (CALLED GEOID 99) ELEVATION TO THE CITY OF HOUSTON (OBSERVED GEOID 18) ELEVATION = -0.51'.

PROJECT BENCH MARK:

STATIC GPS OBSERVATION OF CITY OF HOUSTON MONUMENT 4959-7512 MADE ON 07/30/2024. AN ALUMINUM DISK LOCATED AT THE SOUTHEAST CORNER OF EMNORA LANE AND AGAR LANE. ELEVATION = 91.48' (NAVD 88 GEOID 18).

AMANI ENGINEERING, INC.
11011 RICHMOND AVENUE, SUITE 700
HOUSTON, TEXAS 77042
TEL: (713) 270-6700
Texas Registered Engineering Firm No. F-4528
Texas Registered Surveying Firm No.100282-00

STATE OF TEXAS
REGISTERED
WILLIAM H. REIMER III
4044
PROFESSIONAL
LAND SURVEYOR
09-25-2025

SURVEYED BY: AMANI
FB NO. P-6335

CITY OF HOUSTON
HOUSTON PUBLIC WORKS

SURVEY CONTROL MAP

LIFT STATION CMAR PROJECT

EMNORA LANE

SHEET 1 OF 2

WBS NUMBER	FOR CITY OF HOUSTON USE ONLY
R-000267-0175-4	
DRAWING SCALE	
1" = 20'	
CITY OF HOUSTON PM	
NP NAWARAJ PANTA, P.E.	
SHEET NO. 22 OF 312	

FILE PATH: P:\Cadd\2023\23020-Arcadis COH MAR\CAD_DWG\Survey Control Drawings\Control-Emnora-23020.dwg

0 1 2 3 ORIGINAL SCALE IN INCHES FOR REDUCED PLANS

CITY OF HOUSTON

CITY SURVEY 4959-7512
SITE CONTROL MONUMENT

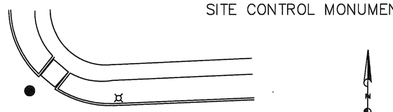

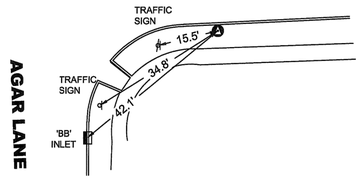

Project WBS# R-000267-0175-3
Texas Coordinate System of 1983,
South Central Zone, U. S. Survey Feet
X= 3,058,421.17
Y= 13,859,915.90

Lat.= N 29° 48' 54.1544"
Lon.= W 95° 33' 44.7993"

Keymap Page: 449Q
Orthometric Elevation = 91.48
Ellipsoid Height= 1.41
Geoid: GEOID 18
Datum Source & Adjustment:
2-HR STATIC GPS OBSERVATION
MADE ON MONUMENT ON 07/30/2024

Reference Frame Used: NAD_83(2011)(EPOCH:2010.0000)
Vertical Adjustment used: NAVD 88 GEOID18
General Location: LOCATED AT THE SOUTHEAST CORNER OF INTERSECTION OF EMNORA LANE AND AGAR LANE.

Date Set: JULY 30, 2024 Type of Mark: ALUMINUM DISK

3 Nearest project control points (bearings and distances stated below):
1. CP #700, MAG NAIL, N 76° 29' 27" E, 136.73'
2. CP #3, X-CUT, N 51° 08' 56" E, 166.91'
3. CP #1, MAG NAIL, N 80° 04' 17" E, 177.44'

NOTE:
1. Bearings are grid bearings.
2. Combined Factor (C.F)= 0.9998917.

Surface= Grid / C.F.

Surveyed By: Amani Engineering, Inc.
11011 Richmond Avenue, Suite 700
Houston, TX 77042
Tel. (713)270-5700
Texas Registered Survey Firm 10028200

STATE OF TEXAS · REGISTERED · CHRISTINA I. WEAVER · 6753 · PROFESSIONAL LAND SURVEYOR
10.15.24

P:\Cadd\2023\23020-Arcadis COH MAR\Monumenta\Emnora Lane #2\4959-7512.dwg

POINT	GRID NORTHING	GRID EASTING	ELEVATION	DESCRIPTION
1	13,859,946.49	3,058,595.93	91.84	MAG NAIL
3	13,860,020.59	3,058,551.14	93.48	MAG NAIL
700	13,859,947.84	3,058,554.11	91.71	MAG NAIL

HARRIS COUNTY FLOOD CONTROL DISTRICT

Harris County Floodplain Reference Marks

Floodplain RM No.:	210320	**Reference Mark Status**	
Stream Number:	W140-06-00	**Date:**	6/4/2013
		Condition:	Recovered
County: Harris	**State:** Texas	**Established By:**	CDS/Muery & Pate Eng.
Key Map No.:	450N	**Date Established:**	5/14/2003
NGS Classification(1):	Range VI	**Watershed:**	Buffalo Bayou
RM's Directly Tied:	210245,210240,210365	**Survey Method Horz:**	GPSOBS
Units of Measure:	US Survey Foot	**Survey Method Vert:**	GPSOBS
Horizontal Datum:	NAD83	**Vertical Datum:**	NAVD88
Horizontal Adj.(2):	2001 Adjustment	**Vertical Adj.(3):**	2001 Adjustment
Projection Zone:	Texas South Central 4204	**Geoid Model Used:**	GEOID99 (CONUS)
Station Name:	210320	**Contractor PID:**	8079
Marker:	Brass DISC	**Rod Depth:**	NA
Stamping:	W140.06 BM10	**Sleeve Depth:**	NA
Mark Logo:	HCFCD	**Geoid Height:**	-89.59
Latitude:	29° 48' 57.31567" N	**Northing:**	13860397.63
Longitude:	95° 32' 42.16776" W	**Easting:**	3063926.29
Ellipsoid Height:	3.84	**Elevation(4):**	93.69
Convergence:	1° 41' 33"	**Scale Factor:**	0.99989836
Satellite Observable:	YES	**Elevation Factor:**	0.99999982
NGS PID (if applic):	NA	**Combined Factor:**	0.99989818

Notes:

1. This is NGS' new classification system. Range VI indicates that this position meets the 0.02m-0.05m Accuracy Standard for Horizontal Position, Ellipsoidal Height, and Orthometric Height (elevation) at the 95% confidence level (m=meters).
2. Horizontal Adjustment - This survey is constrained to the NGS Published Horizontal positions of the geodetic stations adjusted by NGS in 2001.
3. Vertical Adjustment - This survey is constrained to the NGS Published Elevation for Northeast 2250 CORS ARP adjusted by NGS in 2001 and as published in PID AJ6430, Epoch Date 1997.00.
4. The elevation shown equals the Ellipsoid Height minus Geoid Height (from GEOID99) plus a constant of 0.253 feet.
5. The elevation is established by differential leveling techniques, utilizing the published elevations from nearby Reference Marks.

Station Recovery Data: Report an Issue with a Reference Mark - submit to Harris County Flood Control

HARRIS COUNTY FLOOD CONTROL DISTRICT

HARRIS COUNTY FLOODPLAIN REFERENCE MARKS

Floodplain RM Number: 210320
Stream Number: W140-06-00
Northing: 13860397.63 **Easting:** 3063926.29 **Elevation:** 93.69

Location:
Gessner Road @ Emnora Lane

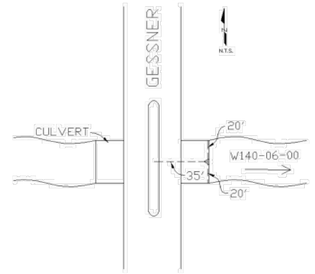

To Reach Description
From the intersection of Hammerly Boulevard and Gessner Road, travel North on Gessner Road approximately 0.2 mile to box culvert. Monument is located on concrete rail on East side centerline culvert.

Photo 1-Station Detail:

Photo 2-Station Area Picture:

NOTES:

1. ALL BEARINGS AND COORDINATES ARE BASED ON THE TEXAS COORDINATE SYSTEM, SOUTH CENTRAL ZONE (4204) NORTH AMERICAN DATUM OF 1983 (2011 ADJ.) 2010 EPOCH. COORDINATES SHOWN HEREON ARE GRID VALUES AND ALL DISTANCES SHOWN ARE SURFACE VALUES. THE HCFCD PUBLISHED COMBINED SCALE FACTOR IS 0.99989818.
2. GRID COORDINATES/SCALE FACTOR = SURFACE COORDINATES.
3. FIELD DATA COLLECTED AUGUST 2024.
4. ALL ELEVATIONS SHOWN HEREON ARE REFERENCED TO THE NORTH AMERICAN VERTICAL DATUM OF 1988 (NAVD88) GEOID 99. ALL CONTROL NETWORK ELEVATIONS ARE TIED TO HCFCD FLOOD PLAIN RM 210320 USING DIFFERENTIAL LEVELING. CALL ELEVATION = 93.69'.
5. THE CONVERSION FACTOR FROM PROJECT (CALLED GEOID 99) ELEVATION TO THE CITY OF HOUSTON (OBSERVED GEOID 18) ELEVATION = -0.51'.

PROJECT BENCH MARK:

STATIC GPS OBSERVATION OF CITY OF HOUSTON MONUMENT 4959-7512 MADE ON 07/30/2024. AN ALUMINUM DISK LOCATED AT THE SOUTHEAST CORNER OF EMNORA LANE AND AGAR LANE. ELEVATION = 91.48' (NAVD 88 GEOID 18).

NO.	DATE	REVISION	APP.

AMANI ENGINEERING, INC.
11011 RICHMOND AVENUE, SUITE 700
HOUSTON, TEXAS 77042
TEL: (713) 270-5700
Texas Registered Engineering Firm No. F-4528
Texas Registered Surveying Firm No.100282-00

SURVEYED BY: AMANI
FB NO. P-6335

STATE OF TEXAS · REGISTERED · WILLIAM H. REIMER III · 4044 · PROFESSIONAL LAND SURVEYOR
09-25-2025

CITY OF HOUSTON
HOUSTON PUBLIC WORKS

SURVEY CONTROL MAP
LIFT STATION CMAR PROJECT

EMNORA LANE
SHEET 2 0F 2

WBS NUMBER	FOR CITY OF HOUSTON USE ONLY
R-000267-0175-4	
DRAWING SCALE	
N.T.S.	
CITY OF HOUSTON PM	
NP NAWARAJ PANTA, P.E.	
SHEET NO. 23 OF 312	

FILE PATH: P:\Cadd\2023\23020-Arcadis COH MAR\CAD_DWG\Survey Control Drawings\Control-Emnora-23020.dwg

0 1 2 3 ORIGINAL SCALE IN INCHES FOR REDUCED PLANS

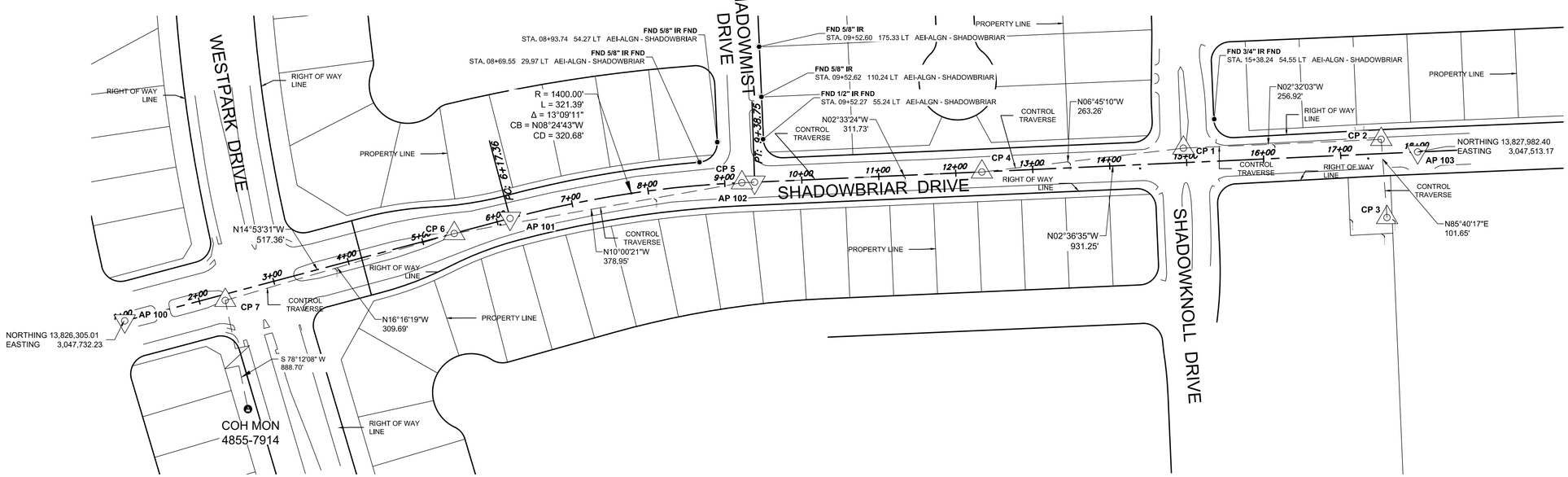

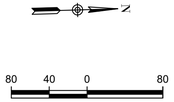

NO.	DATE	REVISION	APP.
1	10/31/25	COH COMMENTS	WHR

NOTES:

1. ALL BEARINGS AND COORDINATES ARE BASED ON THE TEXAS COORDINATE SYSTEM, SOUTH CENTRAL ZONE (4204) NORTH AMERICAN DATUM OF 1983 (2011 ADJ) 2010 EPOCH. COORDINATES SHOWN HEREON ARE GRID VALUES AND ALL DISTANCES SHOWN ARE SURFACE VALUES. THE HCFCD PUBLISHED COMBINED SCALE FACTOR IS 0.99988713.
2. GRID COORDINATES/SCALE FACTOR = SURFACE COORDINATES.
3. FIELD DATA COLLECTED AUGUST 2024.
4. ALL ELEVATIONS SHOWN HEREON ARE REFERENCED TO THE NORTH AMERICAN VERTICAL DATUM OF 1988 (NAVD88) GEOID 99. ALL CONTROL NETWORK ELEVATIONS ARE TIED TO HCFCD FLOOD PLAIN RM 040615 USING DIFFERENTIAL LEVELING. CALL ELEVATION = 71.40'.
5. THE CONVERSION FACTOR FROM PROJECT (CALLED GEOID 99) ELEVATION TO THE CITY OF HOUSTON (OBSERVED GEOID 18) ELEVATION = - 0.44'.

PROJECT BENCH MARK:

STATIC GPS OBSERVATION OF CITY OF HOUSTON MONUMENT 48557914 MADE ON 08/01/2024. A BRASS DISK LOCATED ON SOUTHSIDE OF WESTPARK APPROXIMATELY 0.24 MILES WEST OF W. HOUSTON CENTER BLVD.
ELEVATION = 70.96' (NAVD 88 GEOID 18)

CP 1 -- X-CUT

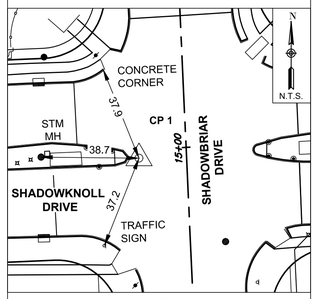

STA. 14+96.57 (18.81' LT)
SHADOWBRIAR BASELINE

CP 2 -- X-CUT

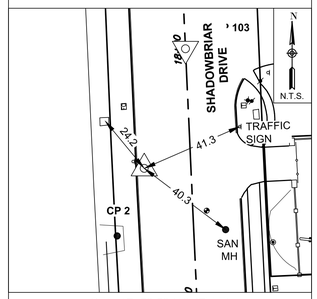

STA. 17+53.50 (18.47' LT)
SHADOWBRIAR BASELINE

CP 3 -- X-CUT

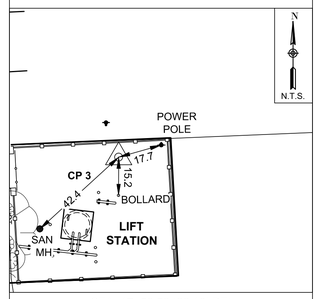

STA. 17+56.53 (83.13' RT)
SHADOWBRIAR BASELINE

CP 4 -- MAG NAIL

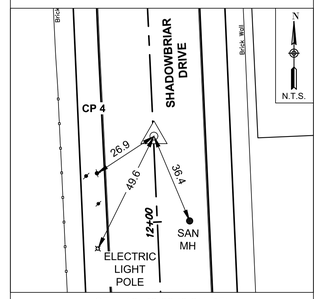

STA. 12+43.00 (0.21' RT)
SHADOWBRIAR BASELINE

CP 5 -- MAG NAIL

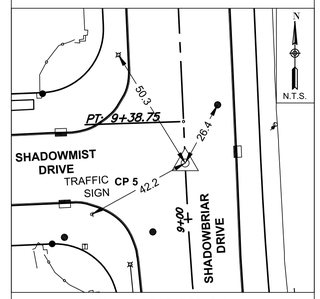

STA. 9+22.27 (0.05' RT)
SHADOWBRIAR BASELINE

AMANI ENGINEERING, INC.
11011 RICHMOND AVENUE, SUITE 700
HOUSTON, TEXAS 77042
TEL: (713) 270-5700
Texas Registered Engineering Firm No. F-4528
Texas Registered Surveying Firm No.100282-00

SURVEYED BY: AMANI
FB NO. P-6335

STATE OF TEXAS REGISTERED WILLIAM H. REIMER III 4044 PROFESSIONAL LAND SURVEYOR
William H. Reimer III
10-31-2025

CITY OF HOUSTON
HOUSTON PUBLIC WORKS

SURVEY CONTROL MAP
LIFT STATION CMAR PROJECT

SHADOW LAKES
SHEET 1 OF 2

WBS NUMBER	FOR CITY OF HOUSTON USE ONLY
R-000267-0175-4	
DRAWING SCALE	
1" = 80'	
CITY OF HOUSTON PM	
NP NAWARAJ PANTA, P.E.	
SHEET NO. 24 OF 312	

FILE PATH: P:\Cadd\2023\23020-Arcadis COH MAR\CAD_DWG\Survey Control Drawings\Control-Shadow Lakes-23020.dwg

0 1 2 3 ORIGINAL SCALE IN INCHES FOR REDUCED PLANS

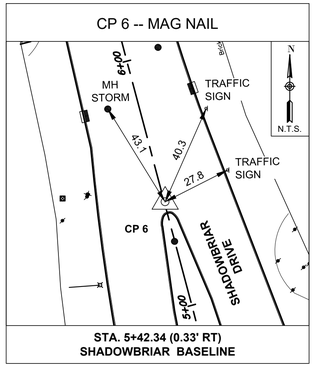

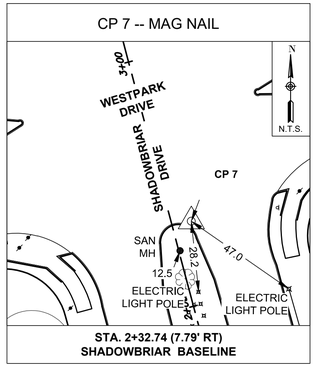

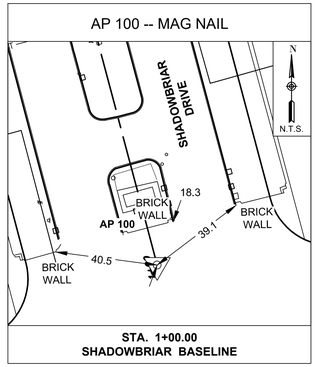

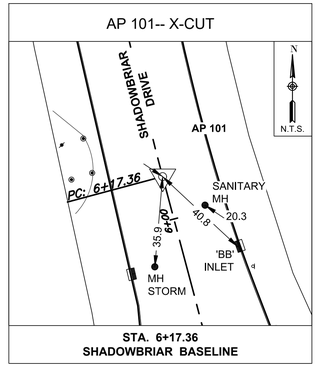

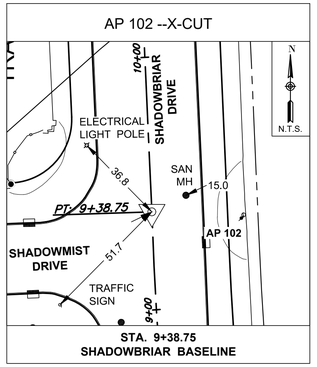

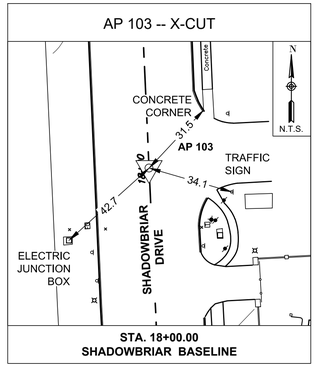

CP No.	GRID NORTHING	GRID EASTING	ELEVATION	DESCRIPTION	BASELINE
1	13,827,678.48	3,047,508.15	77.97	X-CUT	Sta. 14+96.57; 18.81' LT
2	13,827,935.09	3,047,496.83	78.29	X-CUT	Sta. 17+53.50; 18.47' LT
3	13,827,942.76	3,047,598.18	79.27	X-CUT	Sta. 17+56.53; 83.13' RT
4	13,827,417.06	3,047,539.14	78.49	MAG NAIL	Sta. 12+43.00; 0.21' RT
5	13,827,105.67	3,047,553.05	77.91	MAG NAIL	Sta. 9+22.27; 0.05' RT
6	13,826,732.53	3,047,618.88	77.61	MAG NAIL	Sta. 5+42.34; 0.33' RT
7	13,826,435.28	3,047,705.65	77.67	MAG NAIL	Sta. 2+32.74, 7.79' RT

AP No.	GRID NORTHING	GRID EASTING	DESCRIPTION	BASELINE
100	13,826,305.01	3,047,732.23	5/8" IR w/CAP	Sta. 1+00.00
101	13,826,804.94	3,047,599.29	X-CUT	Sta. 6+17.36
102	13,827,122.14	3,047,552.38	X-CUT	Sta. 9+38.75
103	13,827,982.40	3,047,513.17	X-CUT	Sta. 18+00.00

CITY OF HOUSTON

CITY SURVEY 4855-7914
SITE CONTROL MONUMENT
FLOODPLAIN RM#040615

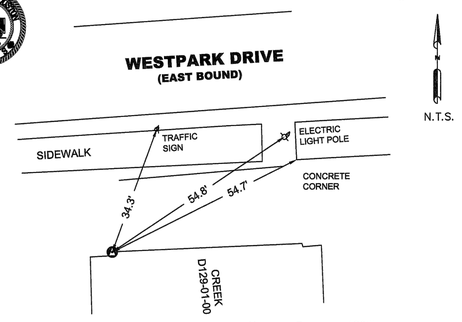

Project WBS# R-000267-0175-3
Texas Coordinate System of 1983,
South Central Zone, U. S. Survey Feet
X= 3,048,575.47
Y= 13,826,616.96

Lat.= N 29° 43' 27.4864"
Lon.= W 95° 35' 47.5258"

Keymap Page: 489W
Orthometric Elevation = 70.96
Ellipsoid Height= -18.94
Geoid: GEOID 18
Datum Source & Adjustment:
2-HR STATIC GPS OBSERVATION
MADE ON MONUMENT ON 08/01/2024

Reference Frame Used: NAD_83(2011)(EPOCH: 2010.0000)
Vertical Adjustment used: NAVD 88 GEOID18
General Location: LOCATED ON THE SOUTHSIDE OF WESTPARK DRIVE, APPROXIMATELY 0.24 MILE WEST OF W. HOUSTON CENTER BLVD INTERSECTION.

Date Set: MAY 14, 2003 Type of Mark: BRASS DISK

3 Nearest project control points (bearings and distances stated below):

1. CP #7, MAG NAIL, S 78° 12' 08" W, 888.70'
2. CP #6, MAG NAIL, N 83° 06' 40" W, 963.66'
3. CP #5, MAG NAIL, N 64° 27' 09" W, 1133.35'

NOTE:
1. Bearings are grid bearings.
2. Combined Factor (C.F)= 0.99988717.

Surface= Grid
C.F.

Surveyed By: Amani Engineering, Inc.
11011 Richmond Avenue, Suite 700
Houston, TX 77042
Tel. (713)270-5700
Texas Registered Survey Firm 10028200

STATE OF TEXAS REGISTERED CHRISTINA I. WEAVERS 6753 PROFESSIONAL LAND SURVEYOR 9.24.24

P:\Cadd\2023\23020-Arcadis COH MAR\Monuments\Shadow Lakes\COH Mon 4855-7914.dwg

NOTES:

1. ALL BEARINGS AND COORDINATES ARE BASED ON THE TEXAS COORDINATE SYSTEM, SOUTH CENTRAL ZONE (4204) NORTH AMERICAN DATUM OF 1983 (2011 ADJ) 2010 EPOCH. COORDINATES SHOWN HEREON ARE GRID VALUES AND ALL DISTANCES SHOWN ARE SURFACE VALUES. THE HCFCD PUBLISHED COMBINED SCALE FACTOR IS 0.99988713.
2. GRID COORDINATES/SCALE FACTOR = SURFACE COORDINATES.
3. FIELD DATA COLLECTED AUGUST 2024.
4. ALL ELEVATIONS SHOWN HEREON ARE REFERENCED TO THE NORTH AMERICAN VERTICAL DATUM OF 1988 (NAVD88) GEOID 99. ALL CONTROL NETWORK ELEVATIONS ARE TIED TO HCFCD FLOOD PLAIN RM 040615 USING DIFFERENTIAL LEVELING. CALL ELEVATION = 71.40'.
5. THE CONVERSION FACTOR FROM PROJECT (CALLED GEOID 99) ELEVATION TO THE CITY OF HOUSTON (OBSERVED GEOID 18) ELEVATION = - 0.44'.

PROJECT BENCH MARK:

STATIC GPS OBSERVATION OF CITY OF HOUSTON MONUMENT 48557914 MADE ON 08/01/2024. A BRASS DISK LOCATED ON SOUTHSIDE OF WESTPARK APPROXIMATELY 0.24 MILES WEST OF W. HOUSTON CENTER BLVD.
ELEVATION = 70.96' (NAVD 88 GEOID 18)

NO.	DATE	REVISION	APP.
1	10/31/25	COH COMMENTS	WHR

AMANI ENGINEERING, INC.
11011 RICHMOND AVENUE, SUITE 700
HOUSTON, TEXAS 77042
TEL: (713) 270-5700
Texas Registered Engineering Firm No. F-4528
Texas Registered Surveying Firm No.100282-00

SURVEYED BY: AMANI
FB NO. P-6335

STATE OF TEXAS REGISTERED WILLIAM H. REINER III 4044 PROFESSIONAL LAND SURVEYOR
William H. Reiner III 10-31-2025

CITY OF HOUSTON
HOUSTON PUBLIC WORKS

SURVEY CONTROL MAP
LIFT STATION CMAR PROJECT

SHADOW LAKES
SHEET 2 OF 2

WBS NUMBER	FOR CITY OF HOUSTON USE ONLY
R-000267-0175-4	
DRAWING SCALE	
N.T.S.	
CITY OF HOUSTON PM	
NP NAWARAJ PANTA, P.E.	
SHEET NO. 25 OF 312	

FILE PATH: P:\Cadd\2023\23020-Arcadis COH MAR\CAD_DWG\Survey Control Drawings\Control-Shadow Lakes-23020.dwg

0 1 2 3 ORIGINAL SCALE IN INCHES FOR REDUCED PLANS

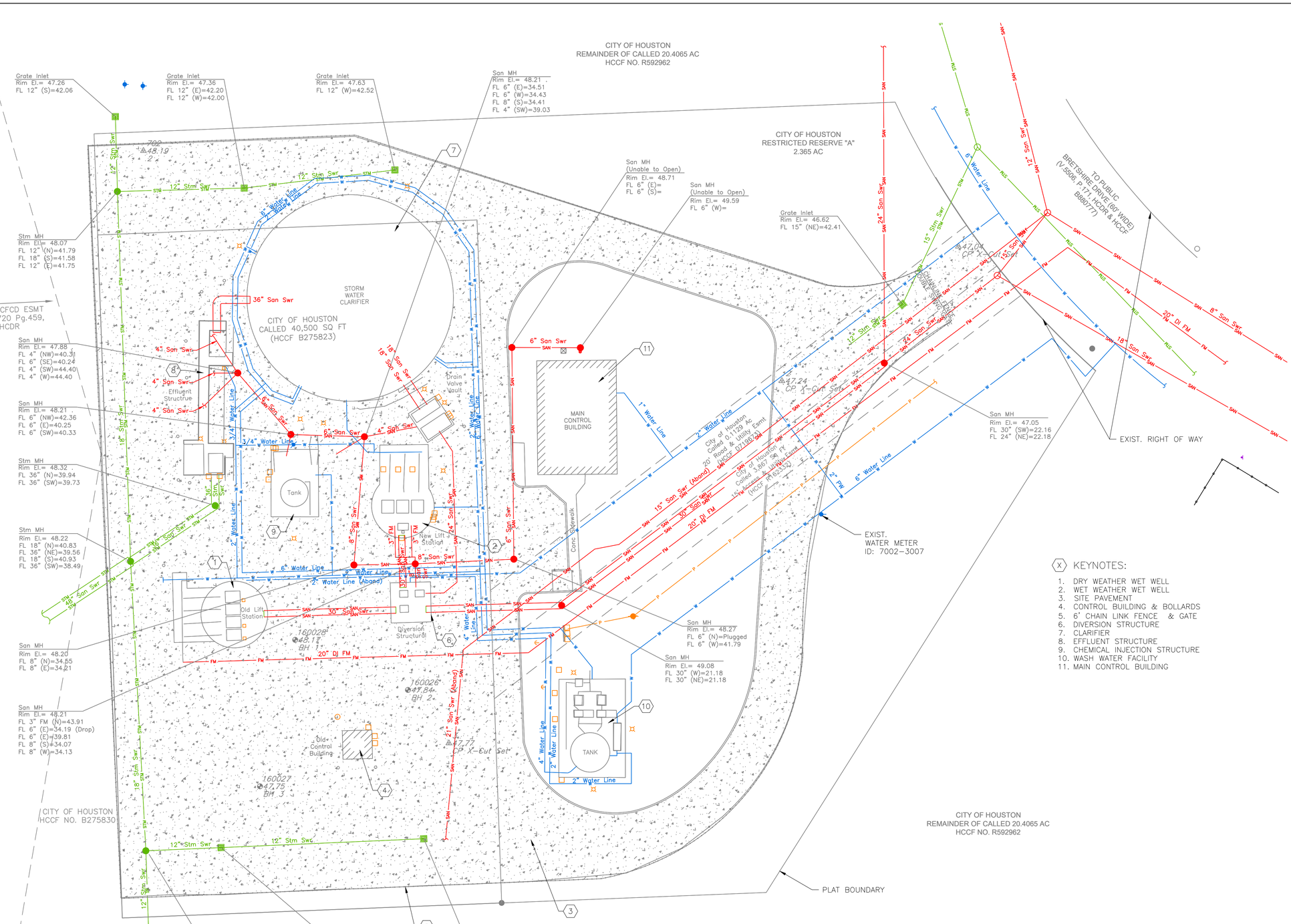

KEYNOTES:

1. DRY WEATHER WET WELL
2. WET WEATHER WET WELL
3. SITE PAVEMENT
4. CONTROL BUILDING & BOLLARDS
5. 6' CHAIN LINK FENCE & GATE
6. DIVERSION STRUCTURE
7. CLARIFIER
8. EFFLUENT STRUCTURE
9. CHEMICAL INJECTION STRUCTURE
10. WASH WATER FACILITY
11. MAIN CONTROL BUILDING

N

0' 10' 20' 40'
HORIZ.
1"=20'

NO.	DATE	REVISION	APP.

BENCHMARK:

STATIC GPS OBSERVATION MADE ON CITY OF HOUSTON MONUMENT 5561-7813 08/05/2024. A BRASS DISK LOCATED ON THE SOUTH SIDE OF BRIDGE ON PARKER ROAD, APPROXIMATELY 640 FEET SOUTHWEST OF BRETSHIRE ROAD INTERSECTION
ELEVATION = 48.92' (NAVD 88 GEOID 18)

100 YEAR BFE = 48.5 FEET (NAVD 88, 2001 ADJ)

500 YEAR BFE = 50.9 FEET (NAVD 88, 2001 ADJ)

NOTICE:
FOR YOUR SAFETY, YOU ARE REQUIRED BY TEXAS LAW TO CALL 811 AT LEAST 48 HOURS BEFORE YOU DIG SO THAT UNDERGROUND LINES CAN BE MARKED. THIS SIGNATURE DOES NOT FULFILL YOUR OBLIGATION TO CALL 811

VERIFICATION OF PRIVATE UTILITY LINES

Mike Brower 03/25/26
Date

CenterPoint Energy natural gas utilities shown. (Gas service lines are not shown). This signature not be used for conflict verification.

Signature valid for six months.

Mike Brower 03/25/26
Date

CenterPoint Energy/UNDERGROUND Electrical Facilities Verification ONLY. (This signature verifies existing underground facilities – not to be used for conflict verification)

Signature valid for six months.

Chris Primrose 3/25/26
Date

Approved for AT&T underground conduit facilities only.
Signature valid for one year.

ARCADIS
Infrastructure · Water · Environment · Buildings
1330 Post Oak Blvd, Suite 2250
Houston, TX 77056
Tel: 713-953-4800
Fax: 713-977-4620
www.arcadis.com
Texas Registered Engineering Firm F-533

SURVEYED BY: AMANI ENGR.
FB NO. P-6335

STATE OF TEXAS
DAVID F. RIDGWAY
105134
LICENSED
PROFESSIONAL ENGINEER
03/12/2026

CITY OF HOUSTON
HOUSTON PUBLIC WORKS

LIFT STATION REHABILITATION & RECONSTRUCTION
CONSENT DECREE

BRETSHIRE #1 LIFT STATION
EXISTING SITE PLAN
C-1

WBS NUMBER	FOR CITY OF HOUSTON USE ONLY
R-000267-0175-4	
DRAWING SCALE	
AS NOTED	
CITY OF HOUSTON PM	
NP NAWARAJ PANTA, P.E.	
SHEET NO. 26 OF 312	

FILE PATH: C:\Users\omesson\DC\ACCDocs\Arcadis ACC US\AUS-30126616-Lift Station Rehab And Reconstruct CMAR\Project Files\10_WIP\...\10T-C-Civil\B.C-1.dwg
PLOT STYLE: Coh_ctb_2580.ctb 3/12/2026 4:50 PM
HCFCD CHANNEL P-118-00-00
(HALLS BAYOU)

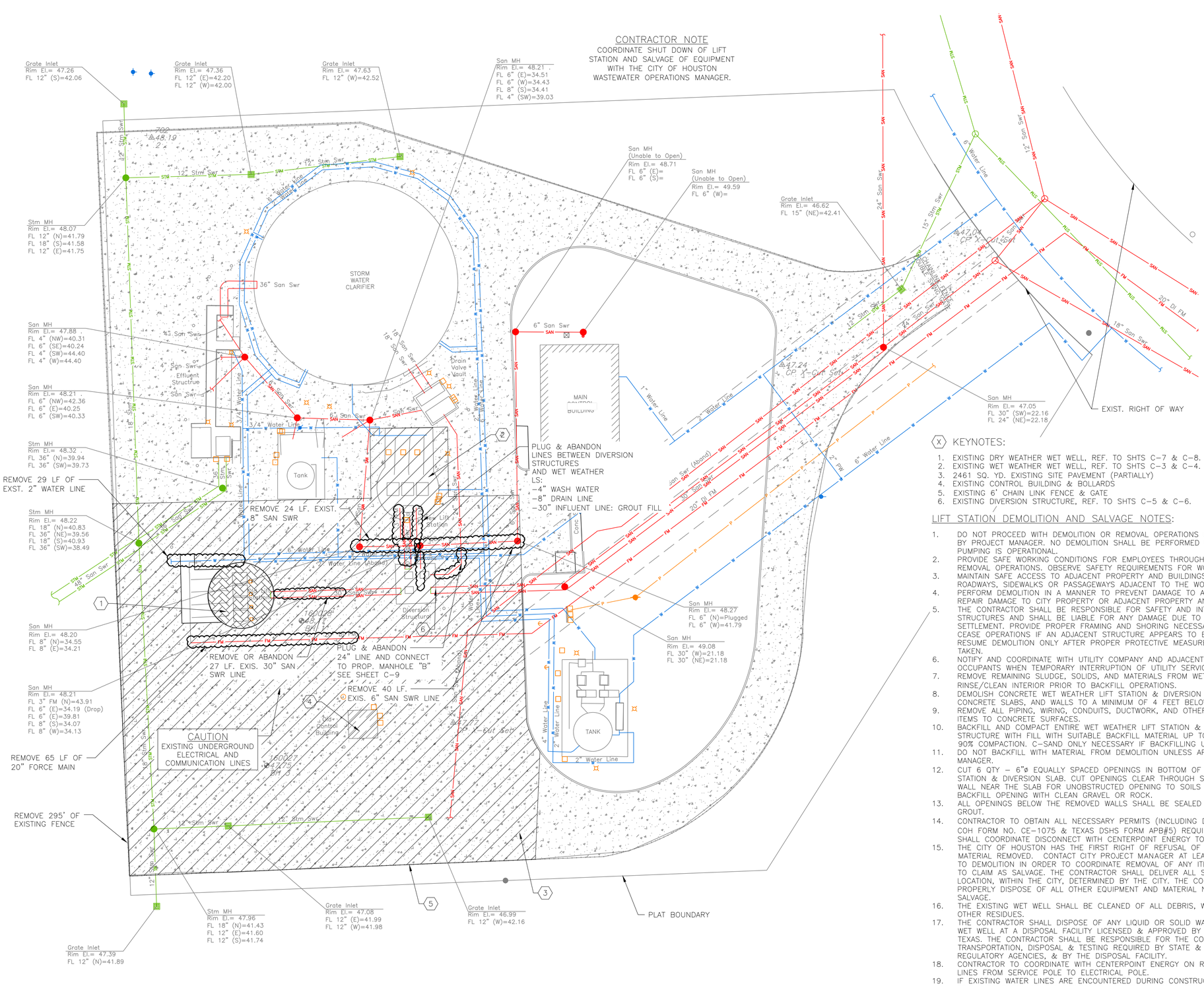

KEYNOTES:

1. EXISTING DRY WEATHER WET WELL, REF. TO SHTS C-7 & C-8.
2. EXISTING WET WEATHER WET WELL, REF. TO SHTS C-3 & C-4.
3. 2461 SQ. YD. EXISTING SITE PAVEMENT (PARTIALLY)
4. EXISTING CONTROL BUILDING & BOLLARDS
5. EXISTING 6' CHAIN LINK FENCE & GATE
6. EXISTING DIVERSION STRUCTURE, REF. TO SHTS C-5 & C-6.

LIFT STATION DEMOLITION AND SALVAGE NOTES:

1. DO NOT PROCEED WITH DEMOLITION OR REMOVAL OPERATIONS UNTIL AUTHORIZED BY PROJECT MANAGER. NO DEMOLITION SHALL BE PERFORMED UNTIL BYPASS PUMPING IS OPERATIONAL.
2. PROVIDE SAFE WORKING CONDITIONS FOR EMPLOYEES THROUGHOUT DEMOLITION AND REMOVAL OPERATIONS. OBSERVE SAFETY REQUIREMENTS FOR WORK BELOW GRADE.
3. MAINTAIN SAFE ACCESS TO ADJACENT PROPERTY AND BUILDINGS. DO NOT OBSTRUCT ROADWAYS, SIDEWALKS OR PASSAGEWAYS ADJACENT TO THE WORK.
4. PERFORM DEMOLITION IN A MANNER TO PREVENT DAMAGE TO ADJACENT PROPERTY. REPAIR DAMAGE TO CITY PROPERTY OR ADJACENT PROPERTY AND FACILITIES.
5. THE CONTRACTOR SHALL BE RESPONSIBLE FOR SAFETY AND INTEGRITY OF ADJACENT STRUCTURES AND SHALL BE LIABLE FOR ANY DAMAGE DUE TO MOVEMENT OR SETTLEMENT. PROVIDE PROPER FRAMING AND SHORING NECESSARY FOR SUPPORT. CEASE OPERATIONS IF AN ADJACENT STRUCTURE APPEARS TO BE ENDANGERED. RESUME DEMOLITION ONLY AFTER PROPER PROTECTIVE MEASURES HAVE BEEN TAKEN.
6. NOTIFY AND COORDINATE WITH UTILITY COMPANY AND ADJACENT BUILDING OCCUPANTS WHEN TEMPORARY INTERRUPTION OF UTILITY SERVICE IS NECESSARY.
7. REMOVE REMAINING SLUDGE, SOLIDS, AND MATERIALS FROM WET WELL AND RINSE/CLEAN INTERIOR PRIOR TO BACKFILL OPERATIONS.
8. DEMOLISH CONCRETE WET WEATHER LIFT STATION & DIVERSION STRUCTURES, CONCRETE SLABS, AND WALLS TO A MINIMUM OF 4 FEET BELOW FINISHED GRADE.
9. REMOVE ALL PIPING, WIRING, CONDUITS, DUCTWORK, AND OTHER MISCELLANEOUS ITEMS TO CONCRETE SURFACES.
10. BACKFILL AND COMPACT ENTIRE WET WEATHER LIFT STATION & DIVERSION STRUCTURE WITH FILL WITH SUITABLE BACKFILL MATERIAL UP TO THE SURFACE TO 90% COMPACTION. C-SAND ONLY NECESSARY IF BACKFILLING UNDER PAVEMENT.
11. DO NOT BACKFILL WITH MATERIAL FROM DEMOLITION UNLESS APPROVED BY PROJECT MANAGER.
12. CUT 6 QTY – 6"ø EQUALLY SPACED OPENINGS IN BOTTOM OF WET WEATHER LIFT STATION & DIVERSION SLAB. CUT OPENINGS CLEAR THROUGH SLAB OR WET WELL WALL NEAR THE SLAB FOR UNOBSTRUCTED OPENING TO SOILS UNDERNEATH. BACKFILL OPENING WITH CLEAN GRAVEL OR ROCK.
13. ALL OPENINGS BELOW THE REMOVED WALLS SHALL BE SEALED WITH NON-SHRINK GROUT.
14. CONTRACTOR TO OBTAIN ALL NECESSARY PERMITS (INCLUDING DEMOLITION PERMITS, COH FORM NO. CE-1075 & TEXAS DSHS FORM APB#5) REQUIRED. CONTRACTOR SHALL COORDINATE DISCONNECT WITH CENTERPOINT ENERGY TO ELECTRICAL POWER.
15. THE CITY OF HOUSTON HAS THE FIRST RIGHT OF REFUSAL OF ANY EQUIPMENT OR MATERIAL REMOVED. CONTACT CITY PROJECT MANAGER AT LEAST 72 HOURS PRIOR TO DEMOLITION IN ORDER TO COORDINATE REMOVAL OF ANY ITEMS THE CITY WISHES TO CLAIM AS SALVAGE. THE CONTRACTOR SHALL DELIVER ALL SALVAGED ITEMS TO A LOCATION, WITHIN THE CITY, DETERMINED BY THE CITY. THE CONTRACTOR SHALL PROPERLY DISPOSE OF ALL OTHER EQUIPMENT AND MATERIAL NOT IDENTIFIED FOR SALVAGE.
16. THE EXISTING WET WELL SHALL BE CLEANED OF ALL DEBRIS, WASTEWATER, AND OTHER RESIDUES.
17. THE CONTRACTOR SHALL DISPOSE OF ANY LIQUID OR SOLID WASTE FOUND IN THE WET WELL AT A DISPOSAL FACILITY LICENSED & APPROVED BY THE STATE OF TEXAS. THE CONTRACTOR SHALL BE RESPONSIBLE FOR THE COST OF TRANSPORTATION, DISPOSAL & TESTING REQUIRED BY STATE & FEDERAL REGULATORY AGENCIES, & BY THE DISPOSAL FACILITY.
18. CONTRACTOR TO COORDINATE WITH CENTERPOINT ENERGY ON REMOVAL OF POWER LINES FROM SERVICE POLE TO ELECTRICAL POLE.
19. IF EXISTING WATER LINES ARE ENCOUNTERED DURING CONSTRUCTION AND ARE FOUND TO OBSTRUCT THE PROPOSED LIFT STATION FACILITIES OR ASSOCIATED UTILITIES, THE CONTRACTOR SHALL NOTIFY THE ENGINEER AND THE CITY OF HOUSTON PUBLIC WORKS INSPECTOR IMMEDIATELY. EXISTING WATER LINES THAT ARE VERIFIED TO BE INACTIVE AND NOT IN SERVICE SHALL BE ABANDONED IN ACCORDANCE WITH THE CITY OF HOUSTON INFRASTRUCTURE DESIGN MANUAL AND STANDARD CONSTRUCTION SPECIFICATION.

LEGENDS:

- TO BE DEMOLISHED
- TO BE REMOVED OR ABANDONED
- TOP OF WET WELL TO BE DEMOLISHED

NO.	DATE	REVISION	APP.

NOTICE:
FOR YOUR SAFETY, YOU ARE REQUIRED BY TEXAS LAW TO CALL 811 AT LEAST 48 HOURS BEFORE YOU DIG SO THAT UNDERGROUND LINES CAN BE MARKED. THIS SIGNATURE DOES NOT FULFILL YOUR OBLIGATION TO CALL 811

VERIFICATION OF PRIVATE UTILITY LINES

Mike Brower — 02/17/26 (Date)

CenterPoint Energy natural gas utilities shown. (Gas service lines are not shown). This signature not be used for conflict verification.

Signature valid for six months.

Mike Brower — 02/17/26 (Date)

CenterPoint Energy/UNDERGROUND Electrical Facilities Verification ONLY. (This signature verifies existing underground facilities – not to be used for conflict verification)

Signature valid for six months.

Elvina Allison — 02/18/2026 (Date)

Approved for AT&T underground conduit facilities only. Signature valid for one year.

ARCADIS
Infrastructure · Water · Environment · Buildings
1330 Post Oak Blvd, Suite 2250
Houston, TX 77056
Tel: 713-953-4800
Fax: 713-977-4620
www.arcadis.com
Texas Registered Engineering Firm F-533

SURVEYED BY: AMANI ENGR.
FB NO. P-6335

STATE OF TEXAS
DAVID F. RIDGWAY
105134
LICENSED
PROFESSIONAL ENGINEER
01/26/2026

CITY OF HOUSTON
HOUSTON PUBLIC WORKS

LIFT STATION REHABILITATION & RECONSTRUCTION CONSENT DECREE

BRETSHIRE #1 LIFT STATION SITE DEMOLITION PLAN C-2

WBS NUMBER	FOR CITY OF HOUSTON USE ONLY
R-000267-0175-4	
DRAWING SCALE	
AS NOTED	
CITY OF HOUSTON PM	
NP NAWARAJ PANTA, P.E.	
SHEET NO. 27 OF 312	

FILE PATH: C:\Users\omessan\DC\ACCDocs\Arcadis ACC US\AUS-30126616-Lift Station Rehab And Reconstruct CMAR\Project Files\10_WIP\20-Bretshire#1\10T-C-Civil\B.C-2.dwg
PLOT STYLE: COH.ctb PLOTTED: 2/11/2026 10:54 AM

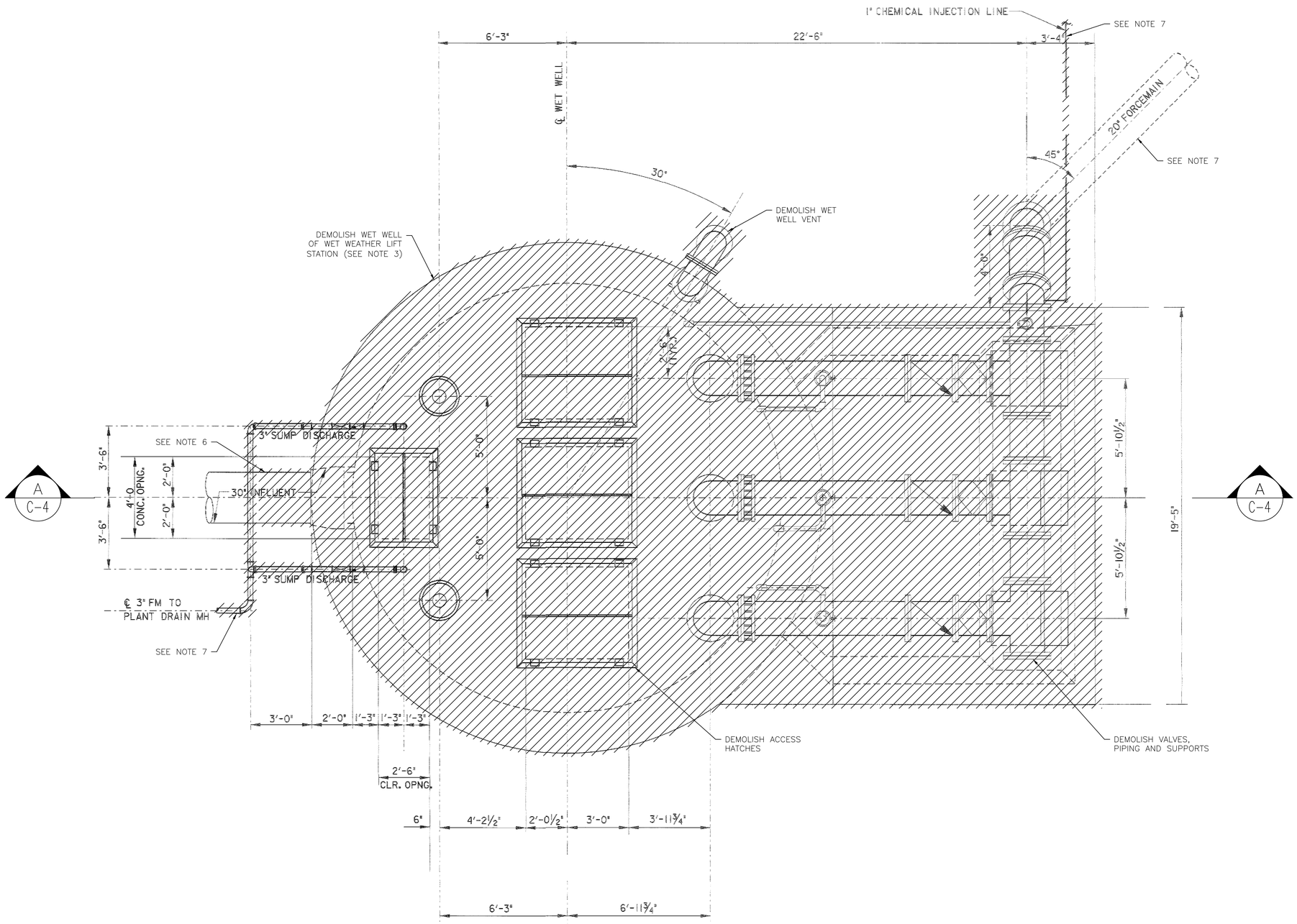

PLAN VIEW @ GRADE

0 2' 4' 6'

SCALE: 3/8"=1'-0"

NO.	DATE	REVISION	APP.

NOTES:

1. THE BACKGROUND OF THIS DRAWING IS BASED ON RECORD DRAWING NO. 31220 FROM PROJECT NO. 4426-2, PREPARED BY OMEGA ENGINEERS, INC. CONTRACTOR IS RESPONSIBLE FOR VERIFYING EXISTING CONDITIONS PRIOR TO SUBMITTING BID. A CLAIM FOR CHANGED CONDITIONS BETWEEN THE EXISTING CONDITIONS AND THE RECORD DRAWINGS WILL NOT BE CONSIDERED.
2. REMOVE AND SALVAGE ALL LADDERS, STAIRS, GRATING, ACCESS HATCHES, PIPING, PUMPS, MOTORS, VENTS, MECHANICAL, ELECTRICAL AND INSTRUMENTATION EQUIPMENT.
3. DEMOLISH AND REMOVE WET WELL TO 4-FEET BELOW EXISTING GRADE. DEMOLISH AND REMOVE PAVEMENT STRUCTURE AND EQUIPMENT PADS. GRADE AREA TO DRAIN, BACKFILL AND PAVE. REFER TO SHEET C-2, NOTES 7, 8, 9 & 10.
4. THE CITY OF HOUSTON HAS THE FIRST RIGHT OF REFUSAL OF ANY EQUIPMENT OR MATERIAL REMOVED. CONTACT CONSTRUCTION MANAGER AT LEAST 72 HOURS PRIOR TO DEMOLITION IN ORDER TO COORDINATE REMOVAL OF ANY ITEMS THE CITY WISHES TO CLAIM AS SALVAGED ITEMS TO A LOCATION WITHIN THE CITY. THE CONTRACTOR SHALL PROPERLY DISPOSE OF ALL OTHER MATERIAL NOT IDENTIFIED FOR SALVAGE.
5. THE EXISTING WET WELL SHALL BE CLEANED OF ALL DEBRIS, WASTEWATER DEMOLITION WASTE AND OTHER RESIDUES BY APPROVED CITY OF HOUSTON DISPOSAL CONTRACTOR.
6. GROUT FILL & ABANDON-IN-PLACE 30-INCH INFLUENT PIPE.
7. CUT & PLUG AND ABANDON-IN-PLACE 20-INCH FORCE MAIN, 1-INCH CHEMICAL INJECTION AND 3-INCH SUMP DISCHARGE UP TO 5-FEET FROM WET WELL STRUCTURE.

LEGEND:

TO BE DEMOLISHED

ARCADIS
Infrastructure · Water · Environment · Buildings
1330 Post Oak Blvd, Suite 2250
Houston, TX 77056
Tel: 713-953-4800
Fax: 713-977-4620
www.arcadis.com
Texas Registered Engineering Firm F-533

SURVEYED BY: AMANI ENGR.
FB NO. P-6335

STATE OF TEXAS
DAVID F. RIDGWAY
105134
LICENSED
PROFESSIONAL ENGINEER
11/21/2025

CITY OF HOUSTON

HOUSTON PUBLIC WORKS

LIFT STATION REHABILITATION & RECONSTRUCTION CONSENT DECREE

BRETSHIRE #1 LIFT STATION WET WEATHER WET WELL DEMOLITION PLAN

C-3

WBS NUMBER	FOR CITY OF HOUSTON USE ONLY
R-000267-0175-4	
DRAWING SCALE	
AS NOTED	
CITY OF HOUSTON PM	
NP NAWARAJ PANTA, P.E.	
SHEET NO. 28 OF 312	

FILE PATH: C:\Users\guldagak0287\DC\ACCDocs\Arcadis ACC US\AUS-30126616-Lift Station Rehab And Reconstruct CMAR\Project Files\10_WIP\20-Bretshire#1\10T-D-Demolition\C-3.dwg
PLOT STYLE: COH.ctb PLOTTED: 11/21/2025 8:15 PM

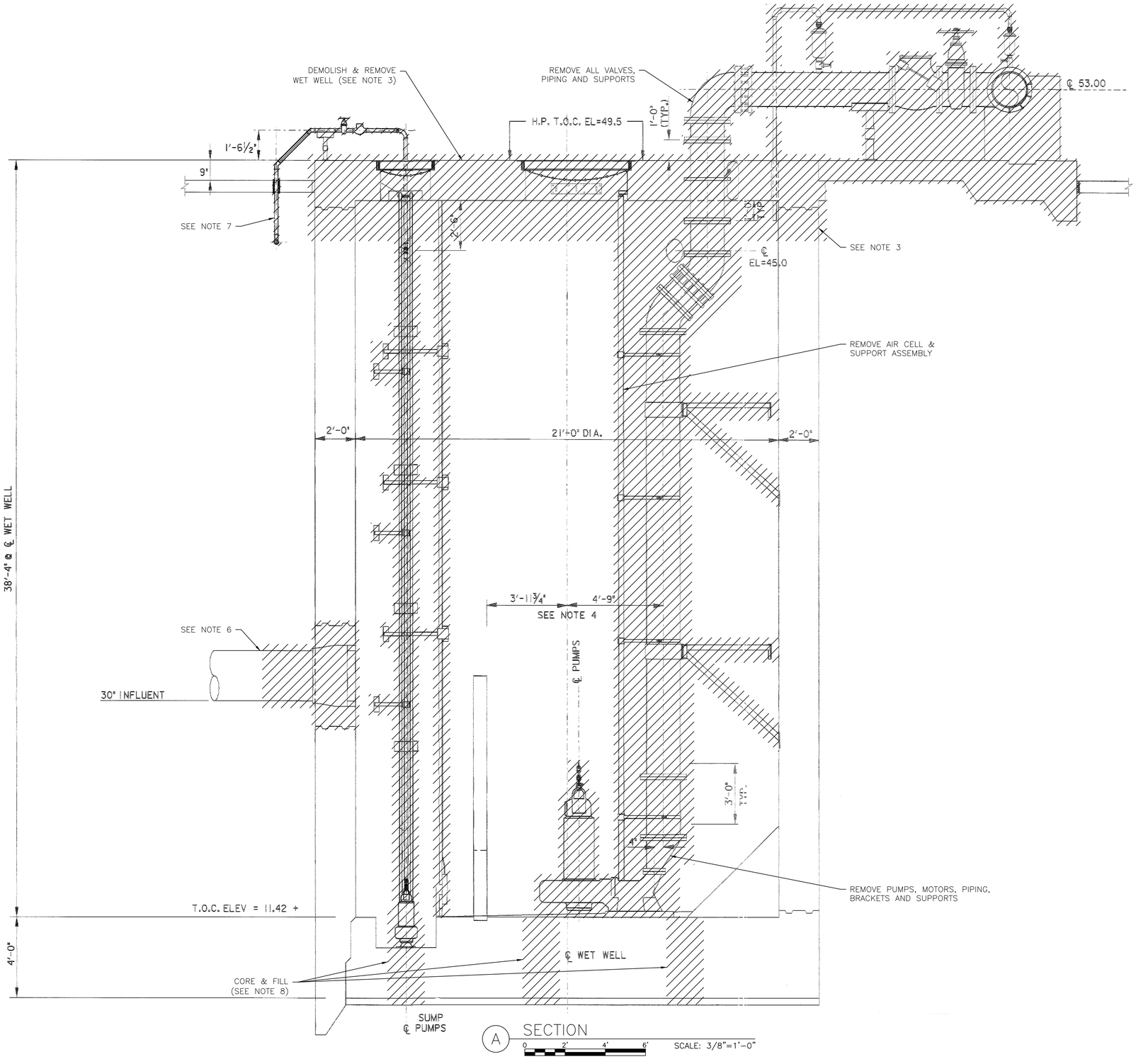

NO.	DATE	REVISION	APP.

NOTES:

1. THE BACKGROUND OF THIS DRAWING IS BASED ON RECORD DRAWING NO. 31220 FROM PROJECT NO. 4426-2, PREPARED BY OMEGA ENGINEERS, INC. CONTRACTOR IS RESPONSIBLE FOR VERIFYING EXISTING CONDITIONS PRIOR TO SUBMITTING BID. A CLAIM FOR CHANGED CONDITIONS BETWEEN THE EXISTING CONDITIONS AND THE RECORD DRAWINGS WILL NOT BE CONSIDERED.
2. REMOVE AND SALVAGE ALL LADDERS, STAIRS, GRATING, ACCESS HATCHES, PIPING, PUMPS, MOTORS, VENTS, MECHANICAL, ELECTRICAL AND INSTRUMENTATION EQUIPMENT.
3. DEMOLISH AND REMOVE WET WELL TO 4-FEET BELOW EXISTING GRADE. DEMOLISH AND REMOVE PAVEMENT STRUCTURE AND EQUIPMENT PADS. GRADE AREA TO DRAIN, BACKFILL AND PAVE. REFER TO SHEET C-2, NOTES 7, 8, 9 & 10.
4. THE CITY OF HOUSTON HAS THE FIRST RIGHT OF REFUSAL OF ANY EQUIPMENT OR MATERIAL REMOVED. CONTACT CONSTRUCTION MANAGER AT LEAST 72 HOURS PRIOR TO DEMOLITION IN ORDER TO COORDINATE REMOVAL OF ANY ITEMS THE CITY WISHES TO CLAIM AS SALVAGED ITEMS TO A LOCATION WITHIN THE CITY. THE CONTRACTOR SHALL PROPERLY DISPOSE OF ALL OTHER MATERIAL NOT IDENTIFIED FOR SALVAGE.
5. THE EXISTING WET WELL SHALL BE CLEANED OF ALL DEBRIS, WASTEWATER DEMOLITION WASTE AND OTHER RESIDUES BY APPROVED CITY OF HOUSTON DISPOSAL CONTRACTOR.
6. GROUT FILL & ABANDON-IN-PLACE 30-INCH INFLUENT PIPE.
7. CUT, GROUT FILL AND ABANDON-IN-PLACE 20-INCH FORCE MAIN, 1-INCH CHEMICAL INJECTION AND 3-INCH SUMP DISCHARGE UPTO 5-FEET FROM WET WELL STRUCTURE.
8. REFER TO SHEET C-2, NOTE 12.

LEGEND:

TO BE DEMOLISHED

ARCADIS
Infrastructure · Water · Environment · Buildings
1330 Post Oak Blvd, Suite 2250
Houston, TX 77056
Tel: 713-953-4800
Fax: 713-977-4620
www.arcadis.com
Texas Registered Engineering Firm F-533

SURVEYED BY: AMANI ENGR.
FB NO. P-6335

STATE OF TEXAS
DAVID F. RIDGWAY
105134
LICENSED PROFESSIONAL ENGINEER
11/21/2025

CITY OF HOUSTON
HOUSTON PUBLIC WORKS

LIFT STATION REHABILITATION & RECONSTRUCTION CONSENT DECREE

BRETSHIRE #1 LIFT STATION WET WEATHER WET WELL DEMOLITION SECTION

C-4

WBS NUMBER	FOR CITY OF HOUSTON USE ONLY
R-000267-0175-4	
DRAWING SCALE	
AS NOTED	
CITY OF HOUSTON PM	
NP NAWARAJ PANTA, P.E.	
SHEET NO. 29 OF 312	

FILE PATH: C:\Users\guildagpk0287\DC\ACCDocs\Arcadis ACC US\AUS-30126616-Lift Station Rehab And Reconstruct CMAR\Project Files\10_WIP\20-Bretshire#1\10T-D-Demolition\C-4.dwg
PLOT STYLE: COH.ctb PLOTTED: 11/21/2025 8:15 PM

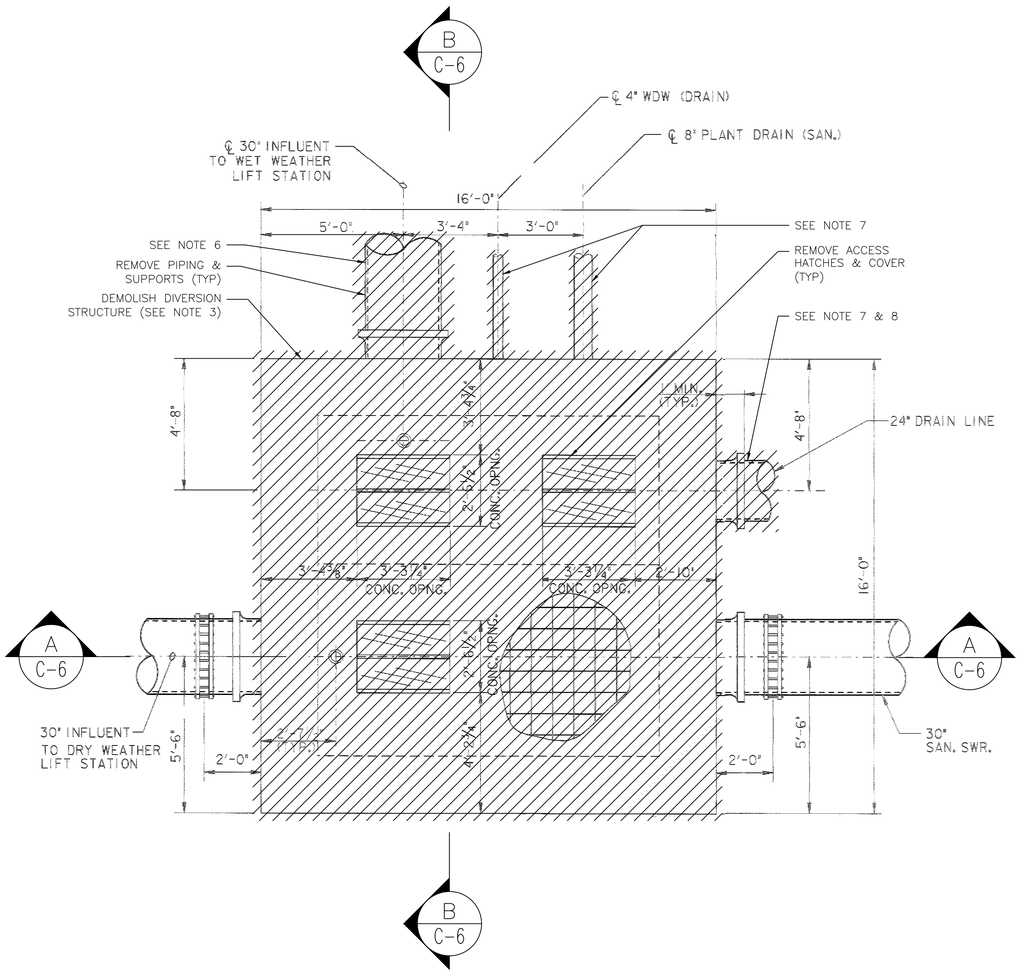

DIVERSION STRUCTURE
PLAN VIEW @ GRADE

0 2' 4' 6'

SCALE: 3/8"=1'-0"

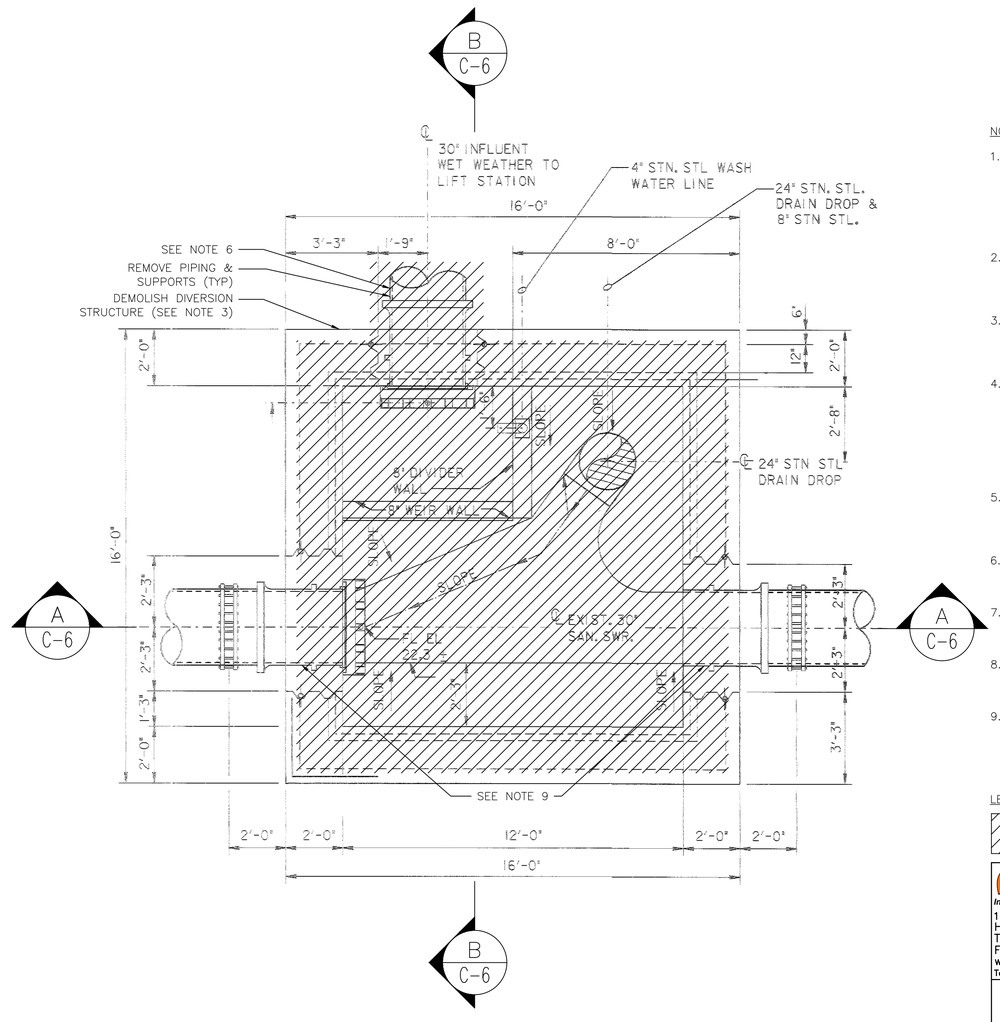

DIVERSION STRUCTURE
PLAN VIEW @ BOTTOM EL.=22.31

0 2' 4' 6'

SCALE: 3/8"=1'-0"

NO.	DATE	REVISION	APP.

NOTES:

1. THE BACKGROUND OF THIS DRAWING IS BASED ON RECORD DRAWING NO. 32181 FROM PROJECT NO. 4428-2, PREPARED BY OMEGA ENGINEERS, INC. CONTRACTOR IS RESPONSIBLE FOR VERIFYING EXISTING CONDITIONS PRIOR TO SUBMITTING BID. A CLAIM FOR CHANGED CONDITIONS BETWEEN THE EXISTING CONDITIONS AND THE RECORD DRAWINGS WILL NOT BE CONSIDERED.
2. REMOVE AND SALVAGE ALL LADDERS, STAIRS, GRATING, PIPING, WEIR PLATE, SLUICE GATE, HATCH, COVER, MECHANICAL, ELECTRICAL, AND INSTRUMENTATION EQUIPMENT.
3. DEMOLISH AND REMOVE DIVERSION STRUCTURE TO 4-FEET BELOW EXISTING GRADE. DEMOLISH AND REMOVE PAVEMENT STRUCTURE. GRADE AREA TO DRAIN, BACKFILL AND PAVE. REFER SHEET C-2, NOTES 7, 8, 9 & 10.
4. THE CITY OF HOUSTON HAS THE FIRST RIGHT OF REFUSAL OF ANY EQUIPMENT OR MATERIAL REMOVED. CONTACT CONSTRUCTION MANAGER AT LEAST 72 HOURS PRIOR TO DEMOLITION IN ORDER TO COORDINATE REMOVAL OF ANY ITEMS THE CITY WISHES TO CLAIM AS SALVAGED ITEMS TO A LOCATION WITHIN THE CITY. THE CONTRACTOR SHALL PROPERLY DISPOSE OF ALL OTHER MATERIAL NOT IDENTIFIED FOR SALVAGE.
5. THE DIVERSION STRUCTURE SHALL BE CLEANED OF ALL DEBRIS, WASTEWATER DEMOLITION WASTE AND OTHER RESIDUES BY APPROVED CITY OF HOUSTON DISPOSAL CONTRACTOR.
6. PLUG, GROUT FILL & ABANDON 30-INCH INFLUENT LINE (TO WET WEATHER LIFT STATION). SEE SHEET C-2 FOR PIPE CONTINUATION.
7. CUT AND REMOVE 24-INCH DRAIN LINE, 8-INCH PLANT DRAIN, 4-INCH WDW (DRAIN) UPTO 5-FEET FROM DIVERSION STRUCTURE.
8. CONTRACTOR TO REROUTE 24-INCH DRAIN LINE AND 4-INCH WDW (DRAIN) TO MH-B. REFER TO CIVIL SITE PLAN.
9. CUT AND REMOVE SUFFICIENT CONCRETE WALL AROUND EXISTING WALL PIPES FOR PROP. COUPLING TO BE INSTALLED ON EX. WALL PIPES.

LEGEND:

TO BE DEMOLISHED

ARCADIS
Infrastructure · Water · Environment · Buildings
1330 Post Oak Blvd, Suite 2250
Houston, TX 77056
Tel: 713-953-4800
Fax: 713-977-4620
www.arcadis.com
Texas Registered Engineering Firm F-533

SURVEYED BY: AMANI ENGR.
FB NO. P-6335

STATE OF TEXAS
DAVID F. RIDGWAY
105134
LICENSED
PROFESSIONAL ENGINEER
11/21/2025

CITY OF HOUSTON

HOUSTON PUBLIC WORKS

LIFT STATION REHABILITATION & RECONSTRUCTION
CONSENT DECREE

BRETSHIRE #1 LIFT STATION DIVERSION STRUCTURE DEMOLITION PLANS

C-5

WBS NUMBER	FOR CITY OF HOUSTON USE ONLY
R-000267-0175-4	
DRAWING SCALE	
AS NOTED	
CITY OF HOUSTON PM	
NP NAWARAJ PANTA, P.E.	
SHEET NO. 30 OF 312	

FILE PATH: C:\Users\guldagak0287\DC\ACCDocs\Arcadis ACC US\AUS-30126616-Lift Station Rehab And Reconstruct CMAR\Project Files\10_WIP\20-Bretshire#1\10T-D-Demolition\C-5.dwg
PLOT STYLE: COH.ctb PLOTTED: 11/21/2025 8:16 PM

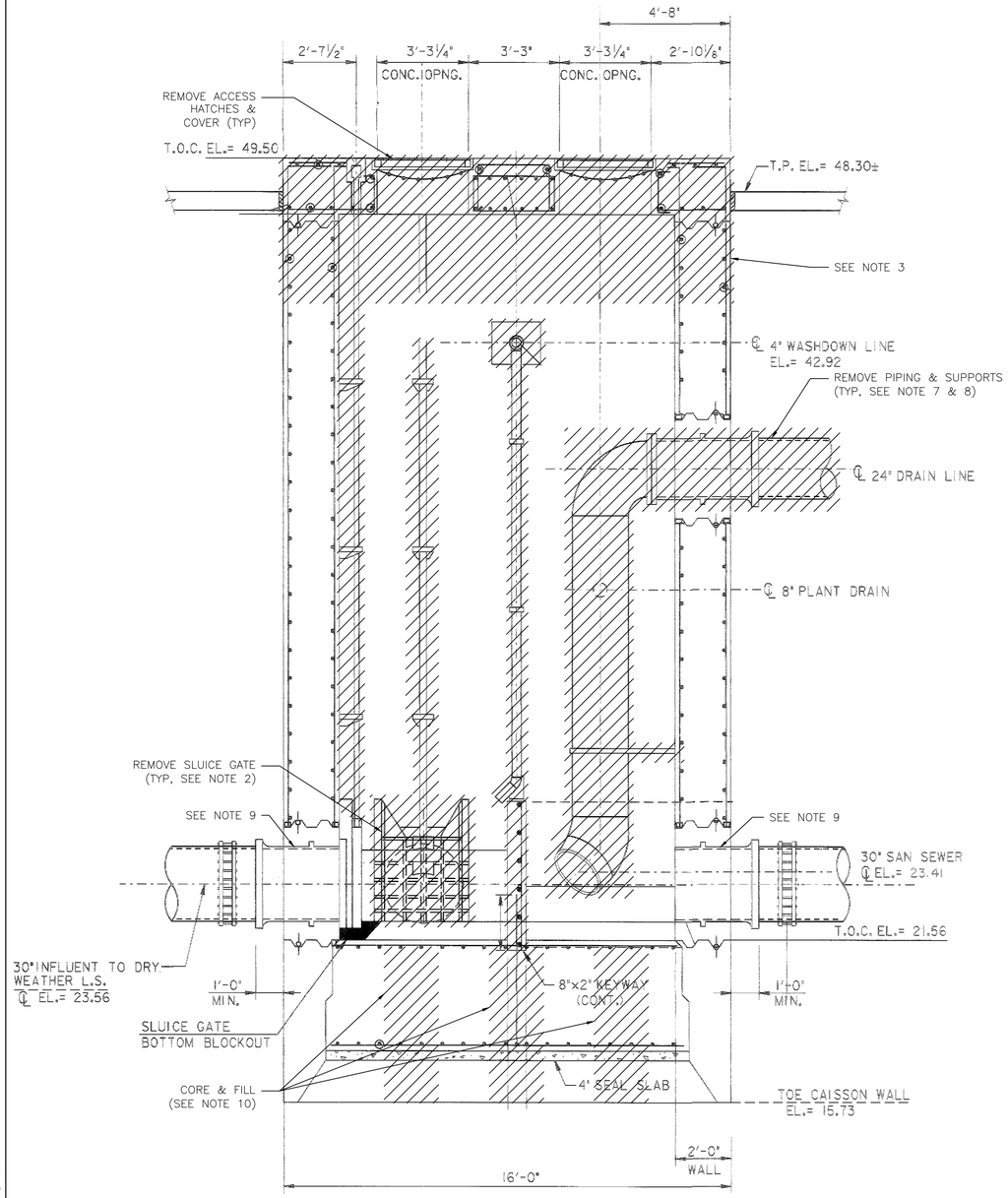

A SECTION

0 2' 4' 6' SCALE: 3/8"=1'-0"

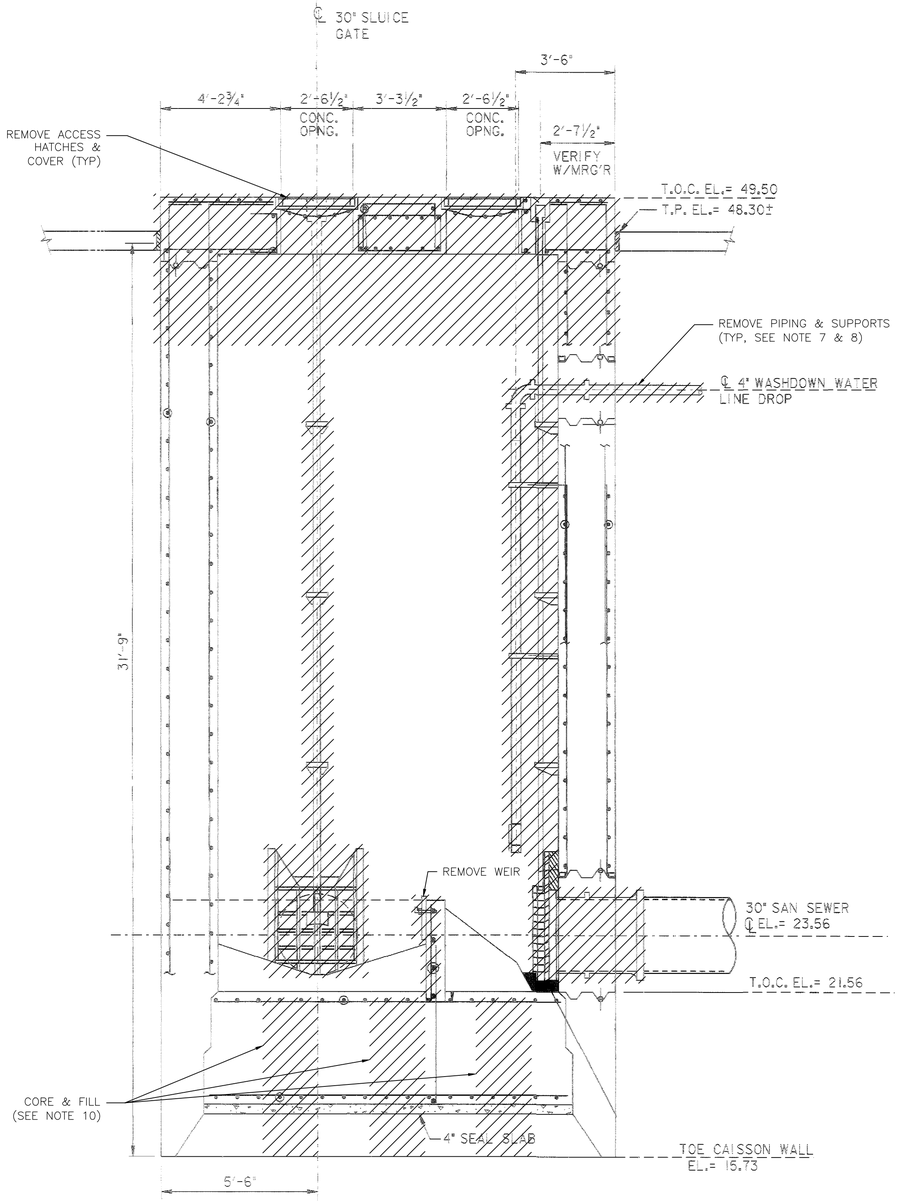

B SECTION

0 2' 4' 6' SCALE: 3/8"=1'-0"

NO.	DATE	REVISION	APP.

NOTES:

1. THE BACKGROUND OF THIS DRAWING IS BASED ON RECORD DRAWING NO. 32181 FROM PROJECT NO. 4428-2, PREPARED BY OMEGA ENGINEERS, INC. CONTRACTOR IS RESPONSIBLE FOR VERIFYING EXISTING CONDITIONS PRIOR TO SUBMITTING BID. A CLAIM FOR CHANGED CONDITIONS BETWEEN THE EXISTING CONDITIONS AND THE RECORD DRAWINGS WILL NOT BE CONSIDERED.
2. REMOVE AND SALVAGE ALL LADDERS, STAIRS, GRATING, PIPING, WEIR PLATE, SLUICE GATE, HATCH, COVER, MECHANICAL, ELECTRICAL, AND INSTRUMENTATION EQUIPMENT.
3. DEMOLISH AND REMOVE DIVERSION STRUCTURE TO 4-FEET BELOW EXISTING GRADE. DEMOLISH AND REMOVE PAVEMENT STRUCTURE. GRADE AREA TO DRAIN, BACKFILL WITH CEMENT STABILIZED SAND AND PAVE. REFER SHEET C-2, NOTES 7, 8, 9 & 10.
4. THE CITY OF HOUSTON HAS THE FIRST RIGHT OF REFUSAL OF ANY EQUIPMENT OR MATERIAL REMOVED. CONTACT CONSTRUCTION MANAGER AT LEAST 72 HOURS PRIOR TO DEMOLITION IN ORDER TO COORDINATE REMOVAL OF ANY ITEMS THE CITY WISHES TO CLAIM AS SALVAGED ITEMS TO A LOCATION WITHIN THE CITY. THE CONTRACTOR SHALL PROPERLY DISPOSE OF ALL OTHER MATERIAL NOT IDENTIFIED FOR SALVAGE.
5. THE EXISTING DIVERSION STRUCTURE SHALL BE CLEANED OF ALL DEBRIS, WASTEWATER DEMOLITION WASTE AND OTHER RESIDUES BY APPROVED CITY OF HOUSTON DISPOSAL CONTRACTOR.
6. PLUG, GROUT FILL, & ABANDON 30-INCH INFLUENT LINE (TO WET WEATHER LIFT STATION).
7. CUT, PLUG, AND REMOVE 24-INCH DRAIN LINE, 8-INCH PLANT DRAIN, 4-INCH WDW (DRAIN) UPTO 5-FEET FROM DIVERSION STRUCTURE.
8. CONTRACTOR TO REROUTE 24-INCH DRAIN LINE AND 4-INCH WDW (DRAIN) TO MH-B. REFER TO CIVIL SITE PLAN.
9. CUT AND REMOVE SUFFICIENT CONCRETE WALL AROUND EXISTING WALL PIPES FOR PROP. COUPLING TO BE INSTALLED ON EX. WALL PIPES.
10. REFER TO SHEET C-2, NOTE 12.

LEGEND:

TO BE DEMOLISHED

ARCADIS
Infrastructure · Water · Environment · Buildings
1330 Post Oak Blvd, Suite 2250
Houston, TX 77056
Tel: 713-953-4800
Fax: 713-977-4620
www.arcadis.com
Texas Registered Engineering Firm F-533

SURVEYED BY: **AMANI ENGR.**
FB NO. P-6335

STATE OF TEXAS
DAVID F. RIDGWAY
105134
LICENSED PROFESSIONAL ENGINEER
11/21/2025

CITY OF HOUSTON

HOUSTON PUBLIC WORKS

LIFT STATION REHABILITATION & RECONSTRUCTION CONSENT DECREE

BRETSHIRE #1 LIFT STATION DIVERSION STRUCTURE DEMOLITION SECTIONS

C-6

WBS NUMBER	FOR CITY OF HOUSTON USE ONLY
R-000267-0175-4	
DRAWING SCALE	
AS NOTED	
CITY OF HOUSTON PM	
NP NAWARAJ PANTA, P.E.	
SHEET NO. 31 OF 312	

FILE PATH: C:\Users\guldagak0287\DC\ACCDocs\Arcadis ACC US\AUS-30126616-Lift Station Rehab And Reconstruct CMAR\Project Files\10_WIP\20-Bretshire#1\10T-D-Demolition\C-6.dwg
PLOT STYLE: COH.ctb PLOTTED: 11/21/2025 8:15 PM

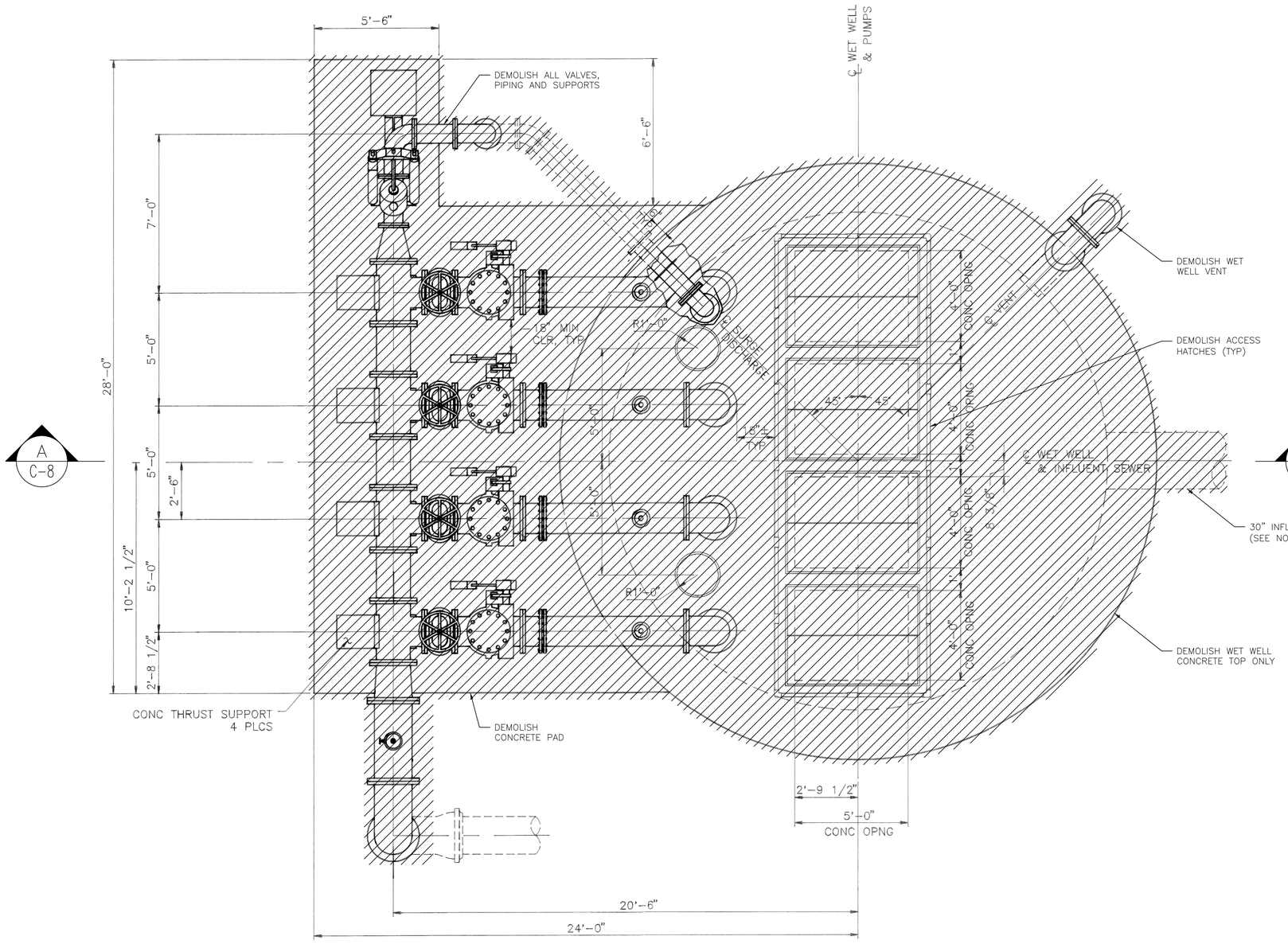

PLAN VIEW @ GRADE

0 2' 4' 6'

SCALE: 3/8"=1'-0"

N

NO.	DATE	REVISION	APP.

NOTES:

1. THE BACKGROUND OF THIS DRAWING IS BASED ON RECORD DRAWING NO. 31220 FROM PROJECT NO. 4426-2, PREPARED BY OMEGA ENGINEERS, INC. CONTRACTOR IS RESPONSIBLE FOR VERIFYING EXISTING CONDITIONS PRIOR TO SUBMITTING BID. A CLAIM FOR CHANGED CONDITIONS BETWEEN THE EXISTING CONDITIONS AND THE RECORD DRAWINGS WILL NOT BE CONSIDERED.
2. DEMOLISH LIFT STATION CONCRETE WET WELL TOP. SEE STRUCTURAL SHEETS FOR ADDITIONAL DETAILS.
3. REMOVE EXISTING COATING IN THE WET WELL AND POWER WASH PRIOR TO CONSTRUCTION PER SPECIFICATIONS 03931 & 09901.
4. REMOVE ALL PIPING, WIRING CONDUITS, DUCTWORK AND OTHER MISCELLANEOUS ITEMS TO CONCRETE SURFACES.
5. THE CITY OF HOUSTON HAS THE FIRST RIGHT OF REFUSAL OF ANY EQUIPMENT OR MATERIAL REMOVED. CONTACT CONSTRUCTION MANAGER AT LEAST 72 HOURS PRIOR TO DEMOLITION IN ORDER TO COORDINATE REMOVAL OF ANY ITEMS THE CITY WISHES TO CLAIM AS SALVAGED ITEMS TO A LOCATION WITHIN THE CITY. THE CONTRACTOR SHALL PROPERLY DISPOSE OF ALL OTHER MATERIAL NOT IDENTIFIED FOR SALVAGE.
6. THE EXISTING WET WELL SHALL BE CLEANED OF ALL DEBRIS, WASTEWATER DEMOLITION WASTE AND OTHER RESIDUES BY APPROVED CITY OF HOUSTON DISPOSAL CONTRACTOR.
7. CONTRACTOR SHALL OBTAIN CITY OF HOUSTON DEMOLITION PERMIT OR SUBMIT PROOF OF NON-APPLICABILITY TO COH CONSTRUCTION PROJECT MANAGER PRIOR TO THE STARTUP OR DEMOLITION ACTIVITIES AT THE SITE.
8. REMOVE AND SALVAGE ALL LADDERS, STAIRS, GRATING, PIPING, PUMPS, MOTORS, VENTS, MECHANICAL, ELECTRICAL AND INSTRUMENTATION EQUIPMENT.
9. SEE SHEET C-2 FOR CONTINUATION OF INFLUENT SEWER PIPE DEMOLITION OR GROUT FILL & ABANDONMENT EXTENT.

LEGEND:

TO BE DEMOLISHED

ARCADIS
Infrastructure · Water · Environment · Buildings
1330 Post Oak Blvd, Suite 2250
Houston, TX 77056
Tel: 713-953-4800
Fax: 713-977-4620
www.arcadis.com
Texas Registered Engineering Firm F-533

SURVEYED BY: AMANI ENGR.
FB NO. P-6335

STATE OF TEXAS
DAVID F. RIDGWAY
105134
LICENSED PROFESSIONAL ENGINEER
11/21/2025

CITY OF HOUSTON

HOUSTON PUBLIC WORKS

LIFT STATION REHABILITATION & RECONSTRUCTION CONSENT DECREE

BRETSHIRE #1 LIFT STATION DRY WEATHER WET WELL DEMOLITION PLAN

C-7

WBS NUMBER	FOR CITY OF HOUSTON USE ONLY
R-000267-0175-4	
DRAWING SCALE	
AS NOTED	
CITY OF HOUSTON PM	
NP NAWARAJ PANTA, P.E.	
SHEET NO. 32 OF 312	

FILE PATH: C:\Users\guildgak0287\DC\ACCDocs\Arcadis ACC US\AUS-30126616-Lift Station Rehab And Reconstruct CMAR\Project Files\10_WIP\20-Bretshire#1\10T-D-Demolition\C-7.dwg
PLOT STYLE: COH.ctb PLOTTED: 11/21/2025 8:16 PM

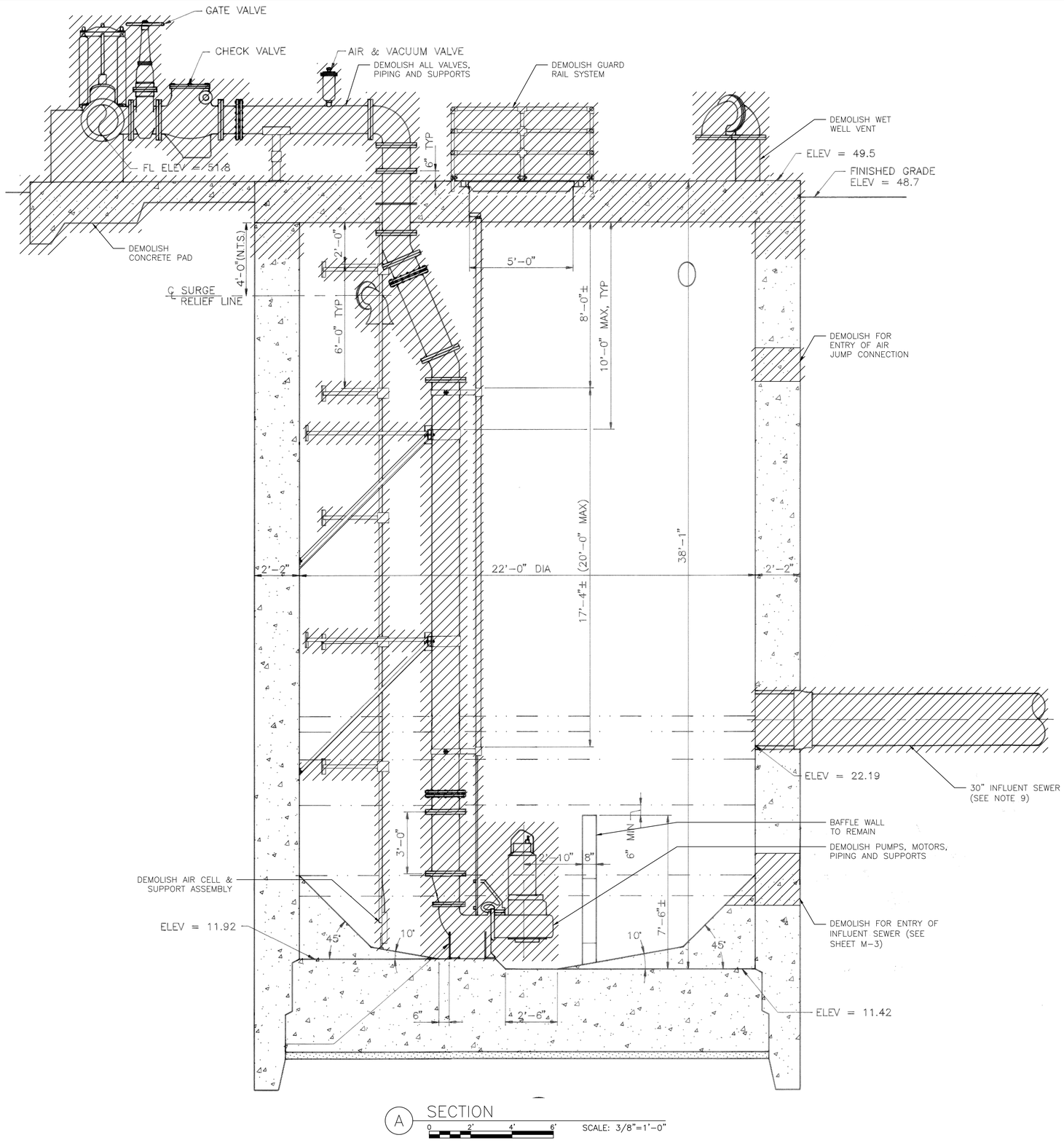

A SECTION

0 2' 4' 6' SCALE: 3/8"=1'-0"

NO.	DATE	REVISION	APP.

NOTES

1. THE BACKGROUND OF THIS DRAWING IS BASED ON RECORD DRAWING NO. 31220 FROM PROJECT NO. 4426-2, PREPARED BY OMEGA ENGINEERS, INC. CONTRACTOR IS RESPONSIBLE FOR VERIFYING EXISTING CONDITIONS PRIOR TO SUBMITTING BID. A CLAIM FOR CHANGED CONDITIONS BETWEEN THE EXISTING CONDITIONS AND THE RECORD DRAWINGS WILL NOT BE CONSIDERED.
2. DEMOLISH LIFT STATION CONCRETE WET WELL TOP. SEE STRUCTURAL SHEETS #1.
3. REMOVE EXISTING COATING AND POWER WASH THE LIFT STATION PRIOR TO CONSTRUCTION PER SPECIFICATIONS 03931 & 09901
4. REMOVE ALL PIPING, WIRING CONDUITS, DUCTWORK AND OTHER MISCELLANEOUS ITEMS TO CONCRETE SURFACES.
5. THE CITY OF HOUSTON HAS THE FIRST RIGHT OF REFUSAL OF ANY EQUIPMENT OR MATERIAL REMOVED. CONTACT CONSTRUCTION MANAGER AT LEAST 72 HOURS PRIOR TO DEMOLITION IN ORDER TO COORDINATE REMOVAL OF ANY ITEMS THE CITY WISHES TO CLAIM AS SALVAGED ITEMS TO A LOCATION WITHIN THE CITY. THE CONTRACTOR SHALL PROPERLY DISPOSE OF ALL OTHER MATERIAL NOT IDENTIFIED FOR SALVAGE.
6. THE EXISTING WET WELL SHALL BE CLEANED OF ALL DEBRIS, WASTEWATER DEMOLITION WASTE AND OTHER RESIDUES BY CERTIFIED APPROVED CITY OF HOUSTON DISPOSAL CONTRACTOR.
7. CONTRACTOR SHALL OBTAIN CITY OF HOUSTON DEMOLITION PERMIT OR SUBMIT PROOF OF NON-APPLICABILITY TO COH CONSTRUCTION PROJECT MANAGER PRIOR TO THE STARTUP OR DEMOLITION ACTIVITIES AT THE SITE.
8. REMOVE AND SALVAGE ALL LADDERS, STAIRS, GRATING, PIPING, PUMPS, MOTORS, VENTS, MECHANICAL, ELECTRICAL AND INSTRUMENTATION EQUIPMENT. REFER TO SHEET C-2, NOTE 16.
9. SEE SHEET C-2 FOR CONTINUATION OF INFLUENT SEWER PIPE DEMOLITION OR GROUT FILL & ABANDONMENT EXTENT.

LEGEND:

TO BE DEMOLISHED

ARCADIS
Infrastructure · Water · Environment · Buildings
1330 Post Oak Blvd, Suite 2250
Houston, TX 77056
Tel: 713-953-4800
Fax: 713-977-4620
www.arcadis.com
Texas Registered Engineering Firm F-533

SURVEYED BY: AMANI ENGR.
FB NO. P-6335

STATE OF TEXAS
DAVID F. RIDGWAY
105134
LICENSED PROFESSIONAL ENGINEER
11/21/2025

CITY OF HOUSTON
HOUSTON PUBLIC WORKS

LIFT STATION REHABILITATION & RECONSTRUCTION CONSENT DECREE

BRETSHIRE #1 LIFT STATION DRY WEATHER WET WELL DEMOLITION SECTION

C-8

WBS NUMBER	FOR CITY OF HOUSTON USE ONLY
R-000267-0175-4	
DRAWING SCALE	
AS NOTED	
CITY OF HOUSTON PM	
NP NAWARAJ PANTA, P.E.	
SHEET NO. 33 OF 312	

FILE PATH: C:\Users\guldagok0287\DC\ACCDocs\Arcadis ACC US\AUS-30126616-Lift Station Rehab And Reconstruct CMAR\Project Files\10_WIP\20-Bretshire#1\10T-D-Demolition\C-8.dwg
PLOT STYLE: COH.ctb PLOTTED: 11/21/2025 8:16 PM

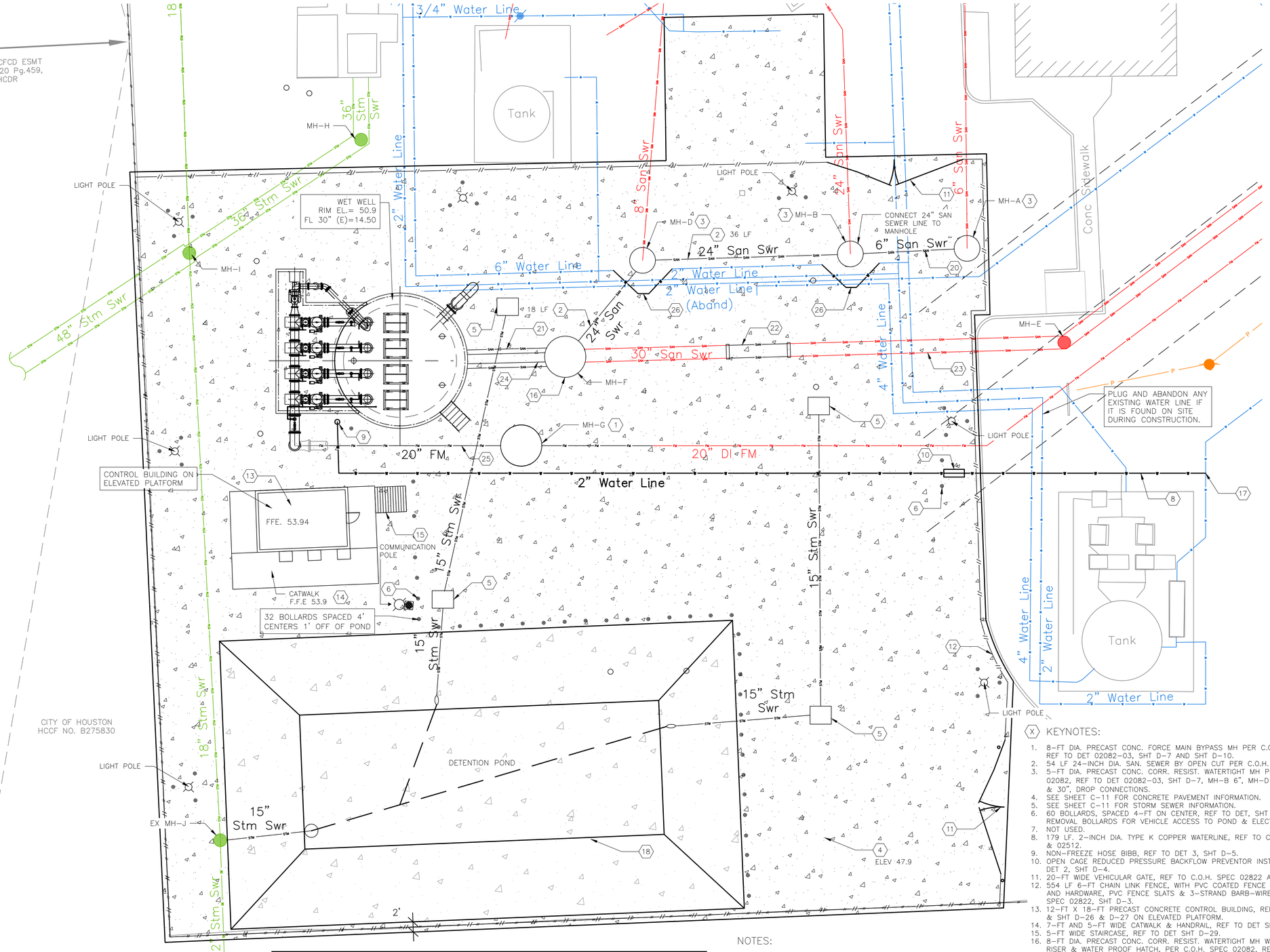

SUMMARY		
POND CUT VOLUME	18,231	FT^3
OVERALL OCCUPIED VOLUME TO 500-YEAR FLOOD STORM ELEVATION	2,641	FT^3
NET CUT VOLUME BELOW THE 500-YEAR FLOOD STORM ELEVATION	15,680	FT^3

NOTES:

1. CONTRACTOR TO REMOVE EXISTING PAVEMENT, LEVEL UPGRADE, FILL WITH TOP SOIL AND SOD WITH GRASS, ENTIRE AREA DISTURBED DURING CONSTRUCTION.
2. EXISTING UTILITY LOCATIONS WERE DEVELOPED FROM BEST INFORMATION AVAILABLE. CONTRACTOR IS TO FIELD VERIFY EXISTING UTILITY LOCATIONS PRIOR TO EXCAVATION. ALL SHOP DRAWINGS USE TO HAVE FIELD VERIFIED FACILITY, STRUCTURAL, AND UTILITY LOCATION INDICATED.
3. SEE DETAIL AND STRUCTURAL DRAWINGS FOR DIMENSIONS AND INFORMATION NOT SHOWN.
4. REFER TO ELECTRICAL PLANS FOR LIGHT LOCATIONS.

(X) KEYNOTES:

1. 8-FT DIA. PRECAST CONC. FORCE MAIN BYPASS MH PER C.O.H. SPEC 02082, REF TO DET 02082-03, SHT D-7 AND SHT D-10.
2. 54 LF 24-INCH DIA. SAN. SEWER BY OPEN CUT PER C.O.H. SPEC 02531.
3. 5-FT DIA. PRECAST CONC. CORR. RESIST. WATERTIGHT MH PER C.O.H. SPEC 02082, REF TO DET 02082-03, SHT D-7, MH-B 6", MH-D 24", MH-F 24" & 30", DROP CONNECTIONS.
4. SEE SHEET C-11 FOR CONCRETE PAVEMENT INFORMATION.
5. SEE SHEET C-11 FOR STORM SEWER INFORMATION.
6. 60 BOLLARDS, SPACED 4-FT ON CENTER, REF TO DET, SHT D-7. PROVIDE REMOVAL BOLLARDS FOR VEHICLE ACCESS TO POND & ELECT. BLDG
7. NOT USED.
8. 179 LF. 2-INCH DIA. TYPE K COPPER WATERLINE, REF TO C.O.H. SPEC 02511 & 02512.
9. NON-FREEZE HOSE BIBB, REF TO DET 3, SHT D-5.
10. OPEN CAGE REDUCED PRESSURE BACKFLOW PREVENTOR INSTALLATION, REF TO DET 2, SHT D-4.
11. 20-FT WIDE VEHICULAR GATE, REF TO C.O.H. SPEC 02822 AND SHT D-3.
12. 554 LF 6-FT CHAIN LINK FENCE, WITH PVC COATED FENCE FABRIC, POSTS AND HARDWARE, PVC FENCE SLATS & 3-STRAND BARB-WIRE, REF TO C.O.H. SPEC 02822, SHT D-3.
13. 12-FT X 18-FT PRECAST CONCRETE CONTROL BUILDING, REF TO SPEC 13455 & SHT D-26 & D-27 ON ELEVATED PLATFORM.
14. 7-FT AND 5-FT WIDE CATWALK & HANDRAIL, REF TO DET SHT D-24 & D-25.
15. 5-FT WIDE STAIRCASE, REF TO DET SHT D-29.
16. 8-FT DIA. PRECAST CONC. CORR. RESIST. WATERTIGHT MH WITH 8-FT DIA. RISER & WATER PROOF HATCH, PER C.O.H. SPEC 02082, REF TO DET 02082-03, SHT D-7.
17. TAP 6-INCH EXISTING WATERLINE.
18. SEE SHEET C-11 FOR DETENTION POND INFORMATION.
19. PLUG DRAIN LINES THAT CONNECT EXISTING DIVERSION STRUCTURE.
20. 23-FT 6-INCH DIA. SAN. SEWER BY OPEN CUT PER C.O.H. SPEC 02531
21. 21 LF. 36-INCH SANITARY SEWER.
22. INSTALL TWO DRESSER COUPLINGS ON EX. WALL PIPES IN EX. DIVERSION STRUCTURE. INSTALL 12 LF OF 30" SAN SEWER & BACKFILL PIPE & STRUCTURE WITH CEMENT STABILIZED SAND.
23. 96 LF OF 30" CIPP, REF TO COH SPEC 02556.
24. 21 LF OF 18" AIR JUMP CONNECTION.
25. 65 LF OF 20" DIP FORCE MAIN PER C.O.H. SPEC 02532
26. TWO REROUTE 16 LF OF 6" WATERLINE, PER C.O.H. SPEC 02511

NO.	DATE	REVISION	APP.

NOTICE:
FOR YOUR SAFETY, YOU ARE REQUIRED BY TEXAS LAW TO CALL 811 AT LEAST 48 HOURS BEFORE YOU DIG SO THAT UNDERGROUND LINES CAN BE MARKED. THIS SIGNATURE DOES NOT FULFILL YOUR OBLIGATION TO CALL 811

VERIFICATION OF PRIVATE UTILITY LINES

Mike Brower 03/25/26
Date

CenterPoint Energy natural gas utilities shown. (Gas service lines are not shown). This signature not be used for conflict verification.
Signature valid for six months.

Mike Brower 03/25/26
Date

CenterPoint Energy/UNDERGROUND Electrical Facilities Verification ONLY. (This signature verifies existing underground facilities – not to be used for conflict verification)
Signature valid for six months.

Chris Primrose 3/25/26
Date

Approved for AT&T underground conduit facilities only.
Signature valid for one year.

ARCADIS
Infrastructure · Water · Environment · Buildings
1330 Post Oak Blvd, Suite 2250
Houston, TX 77056
Tel: 713-953-4800
Fax: 713-977-4620
www.arcadis.com
Texas Registered Engineering Firm F-533

SURVEYED BY: AMANI ENGR.
FB NO. P-6335

STATE OF TEXAS · DAVID F. RIDGWAY · 105134 · LICENSED PROFESSIONAL ENGINEER · 03/12/2026

CITY OF HOUSTON
HOUSTON PUBLIC WORKS

LIFT STATION REHABILITATION & RECONSTRUCTION CONSENT DECREE

BRETSHIRE #1 LIFT STATION SITE PLAN

C-9

WBS NUMBER	FOR CITY OF HOUSTON USE ONLY
R-000267-0175-4	
DRAWING SCALE	
AS NOTED	
CITY OF HOUSTON PM	
NP NAWARAJ PANTA, P.E.	
SHEET NO. 34 OF 312	

FILE PATH: C:\Users\vmesson\DC\ACCDocs\Arcadis ACC US\AUS-30126616-Lift Station Rehab And Reconstruct CMAR\Project Files\10_WIP\20-Bretshire#1\10T-C-Civil\B.C-9.dwg
PLOT STYLE: Coh_ctb_23B30B1Eb 3/13/2026 10:47 AM

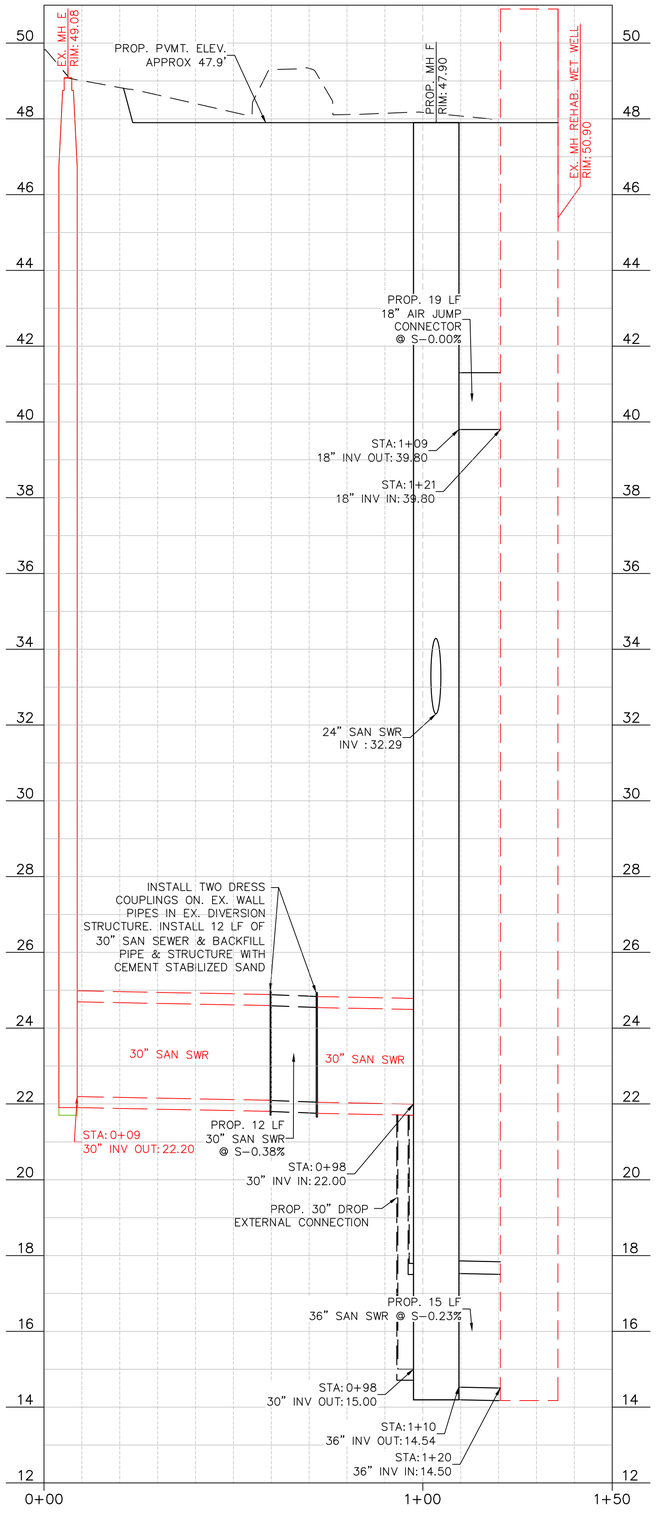

PROFILE FROM EX MH E TO REHAB WET WELL

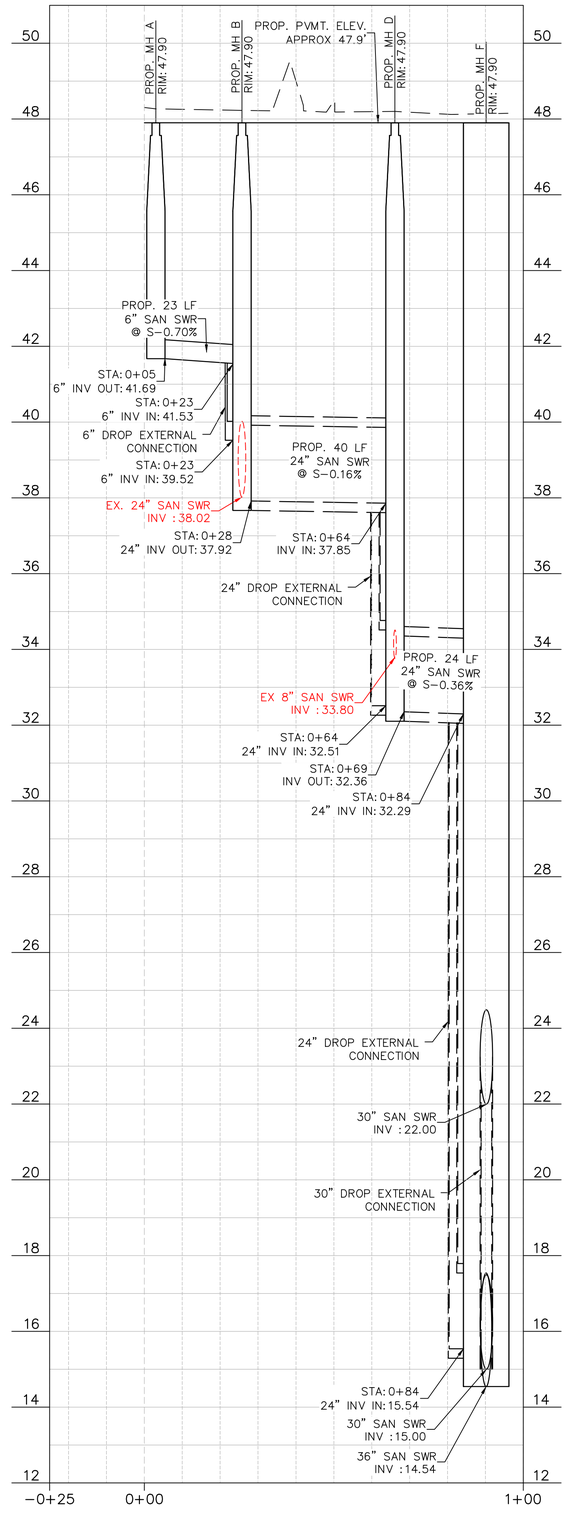

PROFILE FROM EX MH A TO MH F

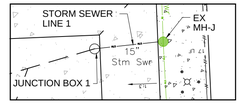

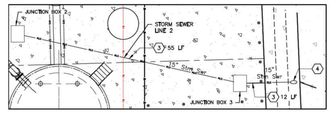

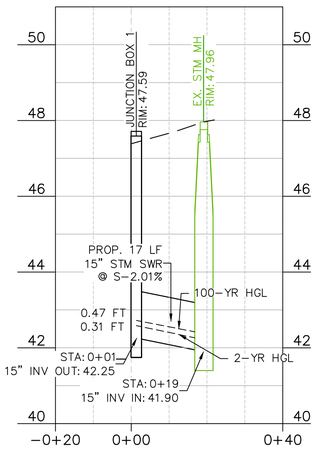

STORM SEWER LINE 1

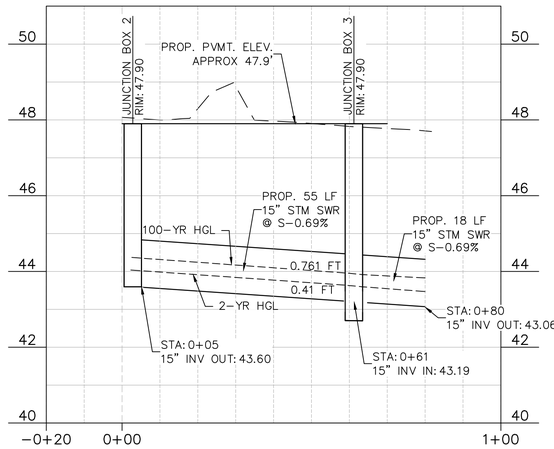

STORM SEWER LINE 2

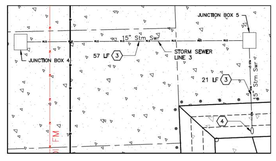

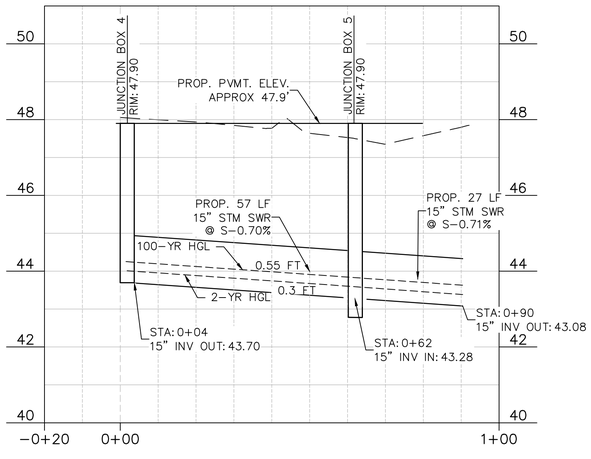

STORM SEWER LINE 3

0 10' 20' 40'
HORZ. 1"=20'

0 2' 4'
VERT. 1"=2'

NO.	DATE	REVISION	APP.

NOTICE:
FOR YOUR SAFETY, YOU ARE REQUIRED BY TEXAS LAW TO CALL 811 AT LEAST 48 HOURS BEFORE YOU DIG SO THAT UNDERGROUND LINES CAN BE MARKED. THIS SIGNATURE DOES NOT FULFILL YOUR OBLIGATION TO CALL 811

VERIFICATION OF PRIVATE UTILITY LINES

Mike Brower 03/25/26
Date

CenterPoint Energy natural gas utilities shown. (Gas service lines are not shown). This signature not be used for conflict verification.

Signature valid for six months.

Mike Brower 03/25/26
Date

CenterPoint Energy/UNDERGROUND Electrical Facilities Verification ONLY. (This signature verifies existing underground facilities – not to be used for conflict verification)

Signature valid for six months.

Chris Primrose 3/25/26
Date

Approved for AT&T underground conduit facilities only.
Signature valid for one year.

ARCADIS
Infrastructure · Water · Environment · Buildings
1330 Post Oak Blvd, Suite 2250
Houston, TX 77056
Tel: 713-953-4800
Fax: 713-977-4620
www.arcadis.com
Texas Registered Engineering Firm F-533

SURVEYED BY: AMANI ENGR.
FB NO. P-6335

STATE OF TEXAS
DAVID F. RIDGWAY
105134
LICENSED
PROFESSIONAL ENGINEER
03/12/2026

CITY OF HOUSTON
HOUSTON PUBLIC WORKS

LIFT STATION REHABILITATION & RECONSTRUCTION
CONSENT DECREE

BRETSHIRE #1 LIFT STATION
YARD PIPING
PROFILE
C-10

WBS NUMBER	FOR CITY OF HOUSTON USE ONLY
R-000267-0175-4	
DRAWING SCALE	
AS NOTED	
CITY OF HOUSTON PM	
NP NAWARAJ PANTA, P.E.	
SHEET NO. 35 OF 312	

FILE PATH: C:\Users\ampueroc4886\DC\ACCDocs\Arcadis ACC US\AUS-30126616-Lift Station Rehab And Reconstruct CMAR\Project Files\10_WIP\20-Bretshire#1\10T-C-Civil\B.C-10.dwg
PLOT STYLE: Coh_ctb_2 BY: Cristian Ampuero Ortiz Date/Time: 3/10/2026 5:51 PM

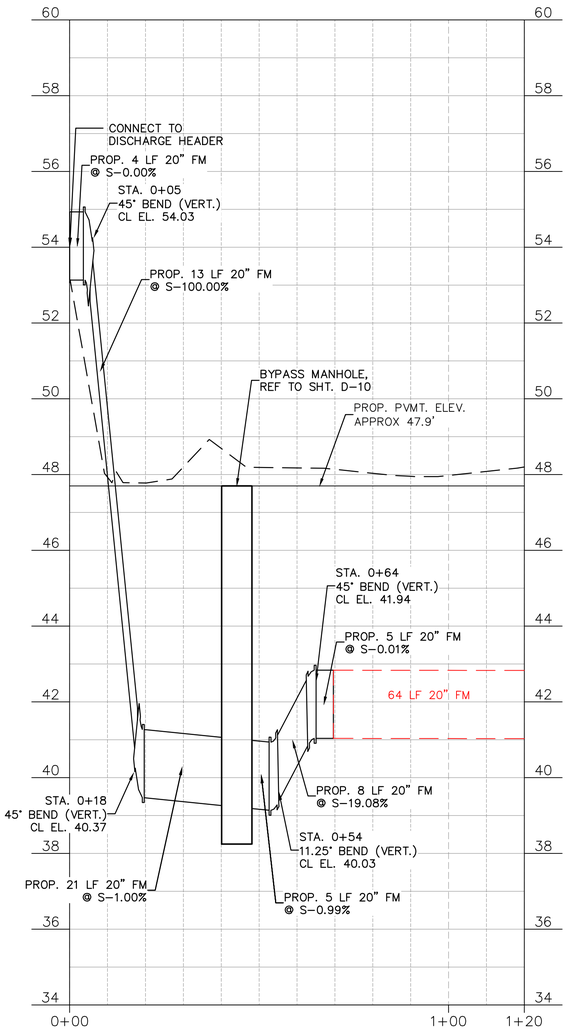

FORCE MAIN PROFILE

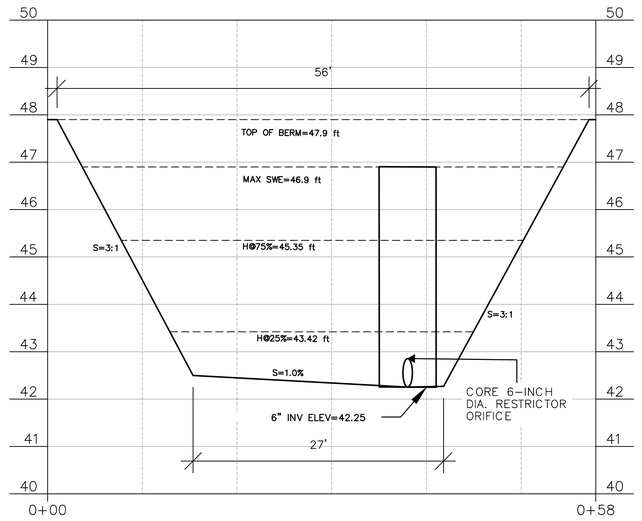

DETENTION POND PROFILE

0 10' 20' 40'
HORZ. 1"=20'

0 2' 4'
VERT. 1"=2'

NO.	DATE	REVISION	APP.

NOTICE:
FOR YOUR SAFETY, YOU ARE REQUIRED BY TEXAS LAW TO CALL 811 AT LEAST 48 HOURS BEFORE YOU DIG SO THAT UNDERGROUND LINES CAN BE MARKED. THIS SIGNATURE DOES NOT FULFILL YOUR OBLIGATION TO CALL 811

VERIFICATION OF PRIVATE UTILITY LINES

Mike Brower 02/17/26
Date

CenterPoint Energy natural gas utilities shown. (Gas service lines are not shown). This signature not be used for conflict verification.

Signature valid for six months.

Mike Brower 02/17/26
Date

CenterPoint Energy/UNDERGROUND Electrical Facilities Verification ONLY. (This signature verifies existing underground facilities – not to be used for conflict verification)

Signature valid for six months.

Rina Allison 02/18/2026
Date

Approved for AT&T underground conduit facilities only.
Signature valid for one year.

ARCADIS
Infrastructure · Water · Environment · Buildings
1330 Post Oak Blvd, Suite 2250
Houston, TX 77056
Tel: 713-953-4800
Fax: 713-977-4620
www.arcadis.com
Texas Registered Engineering Firm F-533

SURVEYED BY: AMANI ENGR.
FB NO. P-6335

STATE OF TEXAS
DAVID F. RIDGWAY
105134
LICENSED
PROFESSIONAL ENGINEER
01/26/2026

CITY OF HOUSTON
HOUSTON PUBLIC WORKS

LIFT STATION REHABILITATION & RECONSTRUCTION CONSENT DECREE

BRETSHIRE #1 LIFT STATION YARD PIPING PROFILE

C-10-A

WBS NUMBER	FOR CITY OF HOUSTON USE ONLY
R-000267-0175-4	
DRAWING SCALE	
AS NOTED	
CITY OF HOUSTON PM	
NP NAWARAJ PANTA, P.E.	
SHEET NO. 36 OF 312	

FILE PATH: C:\Users\ampueroc4886\DC\ACCDocs\Arcadis ACC US\AUS-30126616-Lift Station Rehab And Reconstruct CMAR\Project Files\10_WIP\20-Bretshire#1\10T-C-Civil\B.C-10A.dwg
PLOT STYLE: COH.ctb PLOTTED: 1/26/2026 3:59 PM

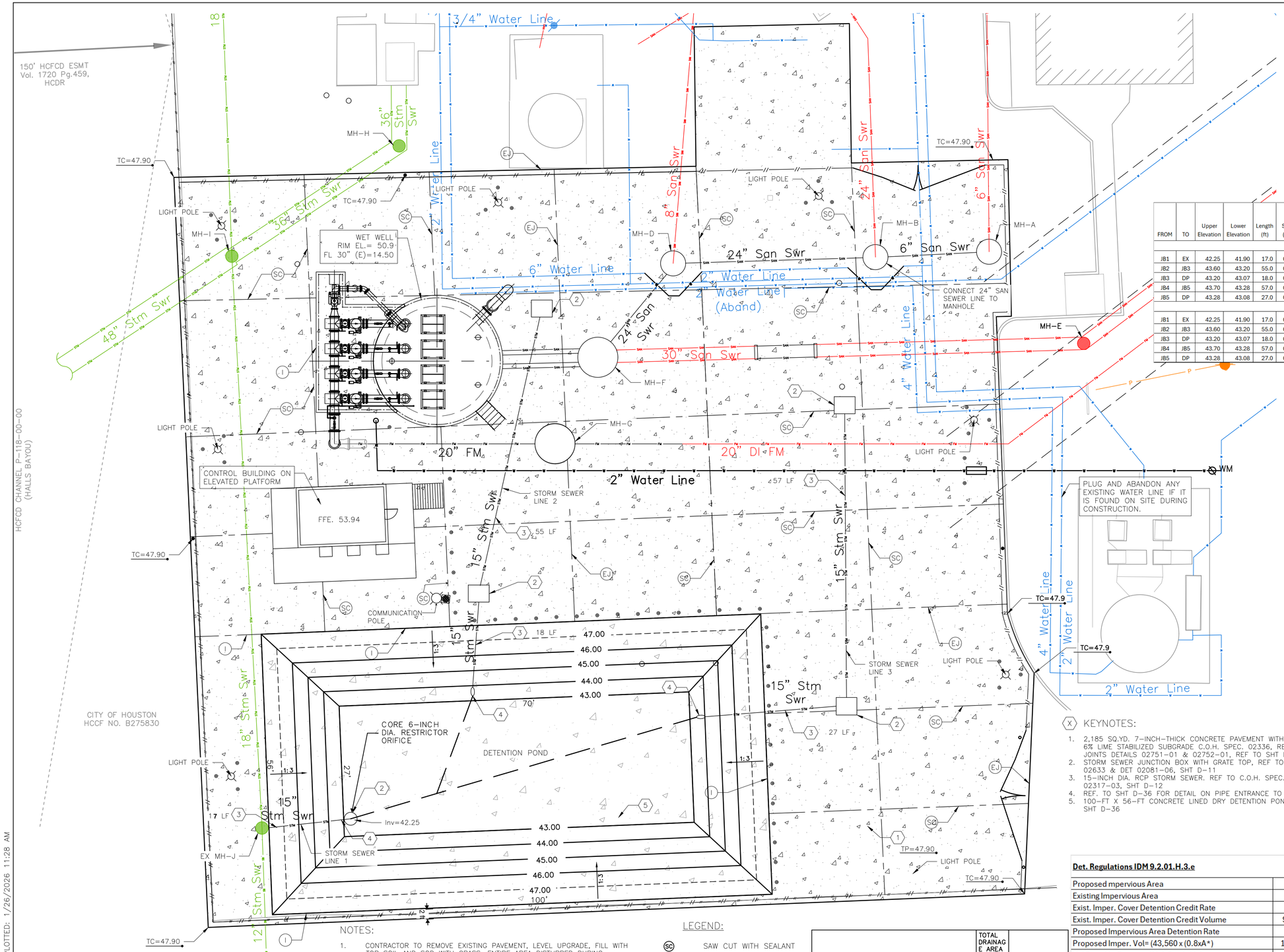

N

0' 5' 10' 20'

HORIZ. 1"=10'

NO.	DATE	REVISION	APP.

STORM SEWER CALCS

FROM	TO	Upper Elevation	Lower Elevation	Length (ft)	Slope (ft/ft)	Design Flow (cfs)	Diameter D (ft)	Flow Depth d (ft)	Depth to Pipe Diameter Ratio d/D	Flow Area A (ft²)	Wetted Perimeter P (ft)	Hydraulic Radius R_h (ft)	Full Flow Velocity v (ft/s)	Travel Time T_t (min)	Calculated Flow Rate Q_{calc} (cfs)	Observed/ Design Flow Rate Q_{des} (cfs)
2-YR																
JB1	EX	42.25	41.90	17.0	0.0206	1.210	1.25	0.31	0.25	0.240	1.309	0.183	5.083	0.06	1.219	1.21
JB2	JB3	43.60	43.20	55.0	0.0073	1.050	1.25	0.41	0.33	0.353	1.530	0.231	3.021	0.30	1.067	1.05
JB3	DP	43.20	43.07	18.0	0.0072	1.050	1.25	0.41	0.33	0.353	1.530	0.231	3.010	0.10	1.063	1.05
JB4	JB5	43.70	43.28	57.0	0.0074	0.700	1.25	0.30	0.24	0.226	1.280	0.177	3.041	0.31	0.688	0.70
JB5	DP	43.28	43.08	27.0	0.0074	0.700	1.25	0.30	0.24	0.226	1.280	0.177	3.049	0.15	0.690	0.70
100-YR																
JB1	EX	42.25	41.90	17.0	0.0206	2.120	1.25	0.47	0.38	0.428	1.661	0.258	5.083	0.06	2.175	2.12
JB2	JB3	43.60	43.20	55.0	0.0073	2.382	1.25	0.76	0.61	0.784	2.241	0.350	3.021	0.30	2.369	2.38
JB3	DP	43.20	43.07	18.0	0.0072	2.382	1.25	0.76	0.61	0.784	2.241	0.350	3.010	0.10	2.360	2.38
JB4	JB5	43.70	43.28	57.0	0.0074	1.588	1.25	0.55	0.44	0.520	1.813	0.287	3.041	0.31	1.581	1.59
JB5	DP	43.28	43.08	27.0	0.0074	1.588	1.25	0.55	0.44	0.520	1.813	0.287	3.049	0.15	1.585	1.59

NOTICE:

FOR YOUR SAFETY, YOU ARE REQUIRED BY TEXAS LAW TO CALL 811 AT LEAST 48 HOURS BEFORE YOU DIG SO THAT UNDERGROUND LINES CAN BE MARKED. THIS SIGNATURE DOES NOT FULFILL YOUR OBLIGATION TO CALL 811

VERIFICATION OF PRIVATE UTILITY LINES

Mike Brower 03/25/26
Date

CenterPoint Energy natural gas utilities shown. (Gas service lines are not shown). This signature not be used for conflict verification.

Signature valid for six months.

Mike Brower 03/25/26
Date

CenterPoint Energy/UNDERGROUND Electrical Facilities Verification ONLY. (This signature verifies existing underground facilities – not to be used for conflict verification)

Signature valid for six months.

Chris Primrose 3/25/26
Date

Approved for AT&T underground conduit facilities only.
Signature valid for one year.

ARCADIS
Infrastructure · Water · Environment · Buildings
1330 Post Oak Blvd, Suite 2250
Houston, TX 77056
Tel: 713-953-4800
Fax: 713-977-4620
www.arcadis.com
Texas Registered Engineering Firm F-533
SURVEYED BY: AMANI ENGR.
FB NO. P-6335

STATE OF TEXAS
DAVID F. RIDGWAY
105134
LICENSED
PROFESSIONAL ENGINEER
01/26/2026

CITY OF HOUSTON

HOUSTON PUBLIC WORKS

LIFT STATION REHABILITATION & RECONSTRUCTION
CONSENT DECREE

BRETSHIRE #1 LIFT STATION CONCRETE PAVEMENT & DRAINAGE PLAN C-11

WBS NUMBER	R-000267-0175-4
DRAWING SCALE	AS NOTED
CITY OF HOUSTON PM	NP NAWARAJ PANTA, P.E.
SHEET NO.	37 OF 312

FOR CITY OF HOUSTON USE ONLY

NOTE TO OWNER

DETENTION POND TO DRAIN WITHIN 48 HOURS AFTER STORM EVENT. MAINTENANCE OF DETENTION POND IS THE OWNER RESPONSIBILITY.

NOTES:

1. CONTRACTOR TO REMOVE EXISTING PAVEMENT, LEVEL UPGRADE, FILL WITH TOP SOIL AND SOD WITH GRASS, ENTIRE AREA DISTURBED DURING CONSTRUCTION.
2. EXISTING UTILITY LOCATIONS WERE DEVELOPED FROM BEST INFORMATION AVAILABLE. CONTRACTOR IS TO FIELD VERIFY EXISTING UTILITY LOCATIONS PRIOR TO EXCAVATION. ALL SHOP DRAWINGS USE TO HAVE FIELD VERIFIED FACILITY, STRUCTURAL, AND UTILITY LOCATION INDICATED.
3. SEE DETAIL AND STRUCTURAL DRAWINGS FOR DIMENSIONS AND INFORMATION NOT SHOWN.
4. CONTRACTOR TO PERFORM CRITICAL LOCATES IN AREAS WHERE PROPOSED WORK MAY NEGATIVLEY IMPACT THEM. ALL CRITICAL LOCATE DESIGNATIONS SHOULD HAVE IDENTIFACTION AND ELEVATION OR DEPTH BELOW GRADE INCLUDED IN AN EXCEL TABLE TO BE FORMALLY SUBMITTED TO EOR TO BE EVALUATED.

LEGEND:

(SC)	SAW CUT WITH SEALANT
(I)	ISOLATION JOINT
(EJ)	DOWEL EXPANSION JOINT
TP=00.00	TOP OF PAVEMENT ELEV
➡	DIRECTION OF FLOW
— — —	EXPANSION JOINT

KEYNOTES:

1. 2,185 SQ.YD. 7-INCH-THICK CONCRETE PAVEMENT WITH 6-INCH THICK 6% LIME STABILIZED SUBGRADE C.O.H. SPEC. 02336, REF TO SHT D-14. JOINTS DETAILS 02751-01 & 02752-01, REF TO SHT D-15
2. STORM SEWER JUNCTION BOX WITH GRATE TOP, REF TO C.O.H. SPEC. 02633 & DET 02081-06, SHT D-11
3. 15-INCH DIA. RCP STORM SEWER. REF TO C.O.H. SPEC. 02631 & DET. 02317-03, SHT D-12
4. REF. TO SHT D-36 FOR DETAIL ON PIPE ENTRANCE TO POND
5. 100-FT X 56-FT CONCRETE LINED DRY DETENTION POND. REF TO DET. SHT D-36

	TOTAL DRAINAGE AREA	
2-YR, 24-H EVENT, (IDM 9.2.01.B.1.A.2), I=	3.83	IN/HR
100-YR, 24-H EVENT, (IDM 9.2.01.B.1.A.2), I=	8.70	IN/HR
SURFACE AREA, A=	0.57	ACRE
PROPOSED IMPERVIOUS AREA (INC. DRIVEWAY), AI=	0.57	ACRE
IMP. SURFACE COEFICIENT (IDM 9.2.01.B.3.A.1), C=	0.80	
Q2YR = C X I X A	1.75	FT3/S
Q100YR = C X I X A	3.97	FT3/S

Det. Regulations IDM 9.2.01.H.3.e		
Proposed mpervious Area	0.57	Acre
Existing Impervious Area	0.57	Acre
Exist. Imper. Cover Detention Credit Rate	0.4	Acre-ft/Acre
Exist. Imper. Cover Detention Credit Volume	9,932	Acre-ft
Proposed Impervious Area Detention Rate	0.8	Acre-ft/Acre
Proposed Imper. Vol= (43,560 x (0.8xA*)	19,863	ft^3
Vol Req= V_1=Proposed Vol-Credit Vol	9,932	ft^3
Designed Basin Vol: V_b=	12,827	ft^3
Discharge Orifices IDM 9.2.01.H.4.b:		
Head @ 25% capacity	0.92	ft
Head @ 75% capacity	2.85	ft
$Q= A_{S^*} x C x (2g)^{0.5} x (Head)^{0.5}$ (at 25%)*	1.21	ft^3/s
$Q= A_{S^*} x C x (2g)^{0.5} x (Head)^{0.5}$ (at 75%)*	2.12	ft^3/s

** Calculated with a 6-in orifice to meet COH criteria

FILE PATH: C:\Users\ampueroc4886\DC\ACCDocs\Arcadis ACC US\AUS-30126616-Lift Station Rehab And Reconstruct CMAR\Project Files\10_WIP\20-Bretshire#1\10T-C-Civil\B.C-11.dwg
PLOT STYLE: COH.ctb PLOTTED: 1/26/2026 11:28 AM

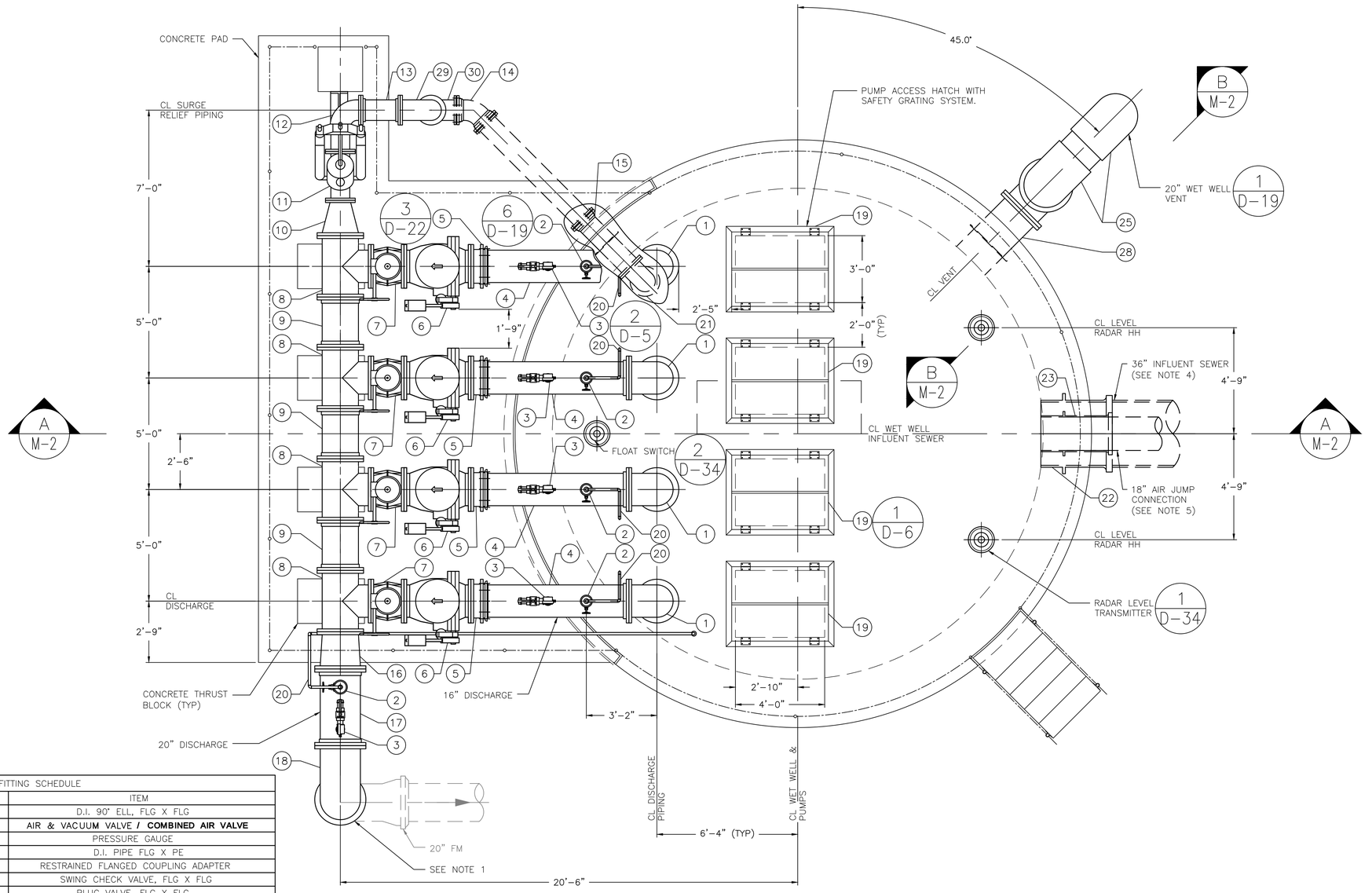

PLAN VIEW @ GRADE

0 2' 4' 6'

SCALE: 3/8"=1'-0"

PIPE FITTING SCHEDULE			
ITEM NO.	QUANTITY	SIZE	ITEM
1	4	16"	D.I. 90° ELL, FLG X FLG
2	4/1	3"/3"	AIR & VACUUM VALVE / COMBINED AIR VALVE
3	5	2 1/2"	PRESSURE GAUGE
4	12	16"	D.I. PIPE FLG X PE
5	12	16"	RESTRAINED FLANGED COUPLING ADAPTER
6	4	16"	SWING CHECK VALVE, FLG X FLG
7	4	16"	PLUG VALVE, FLG X FLG
8	4	18" X 16"	D.I. REDUCING TEE, FLG
9	3	18"	D.I. PIPE, FLG X FLG
10	1	18" X 10"	D.I. REDUCER, FLG X FLG
11	1	10"	SURGE RELIEF VALVE, FLG X FLG
12	1	10"	D.I. 90° ELL W / BASE, FLG X FLG
13	1	10"	D.I. PIPE, FLG X FLG
14	1	10"	D.I. 45° ELL, MJ X MJ (RESTRAINED)
15	1	10"	WALL PIPE, FLG X MJ (RESTRAINED)
16	1	20" X 18"	D.I. REDUCER, FLG X FLG
17	1	20"	D.I. PIPE, FLG X FLG
18	1	20"	D.I. 90° ELL, FLG X FLG
19	4	4'-0" X 3'-0"	DOUBLE LEAF WATERPROOF ACCESS HATCH COVER WITH POWDER COATED ALUMINIUM PROTECTIVE GRATING PANEL.
20	5	1"	SS AIR RELEASE DRAIN LINE PIPE, PE X PE
21	1	10"	D.I. 90° ELL, FLG X FLARE
22	1	36"	WALL PIPE W/WATERSTOP COLLAR PE X P. ON, D.I.
23	1	18"	WALL PIPE W/WATERSTOP COLLAR PE X P. ON, D.I.
24	1	20"	316 SS OR FRP 90° ELL, FLG X FLG
25	2	20"	316 SS OR FRP 90° ELL, W/P. ON WELDED
26	1	20"	316 SS OR FRP PIPE, FLG X P.ON/WELDED
27	1	20"	SS BIRD SCREEN
28	1	20"	WALL PIPE W/WATERSTOP COLLAR PE X FLG, D.I.
29	1	10"	D.I. 90° ELL, FLG X FLG
30	1	10"	D.I. 90° ELL, MJ X MJ (RESTRAINED)

AIR AND SURGE VALVE SCHEDULE				
ITEM NO.	TYPE OF AIR VALVE	QTY	AIR VALVE INLET SIZE (IN)	ORIFICE SIZE (IN)
PUMP DISCHARGE	**AIR & VACUUM VALVE**	4	3	–
FORCE MAIN	COMBINED AIR VALVE	1	3	1/4
FORCE MAIN	SURGE RELIEF VALVE	1	10	–

N

NO.	DATE	REVISION	APP.

NOTES:

1. CONNECT NEW 20" DI DISCHARGE HEADER WITH EXISTING 20" DI FORCE MAIN.
2. ALL ITEMS LISTED HEREIN SHALL CONFORM TO PROJECT SPECIFICATIONS.
3. PUMP MANUFACTURER TO PROVIDE ENGINEERED SHOP DRAWINGS FOR WATERPROOF ACCESS HATCH SEALED BY A LICENSED ENGINEER FOR DEFERRED SUBMITTAL TO CODE ENFORCEMENT FROM CITY APPROVED FABRICATOR. SEE SPECIFICATION SECTION 11311 CLAUSE 2.03 (A) FOR DETAILS.
4. SEE SHEET C-9 & C-10 FOR CONTINUATION OF 36" INFLUENT SEWER AND ENTRY OF 30" INFLUENT SEWER AT AUXILIARY WET WELL (MH-F).
5. CONNECT 18" AIR JUMP CONNECTION TO THE AUXILIARY WET WELL. REFER SHEET C-9 FOR LOCATION OF AUXILIARY WET WELL.
6. ALL PIPING, VALVES, HATCHES TO BE PAINTED / COATED PER SPEC 09901. PUMP NUMBER TO BE LABELED ON ACCESS HATCHES COVERS.

ARCADIS
Infrastructure · Water · Environment · Buildings
1330 Post Oak Blvd, Suite 2250
Houston, TX 77056
Tel: 713-953-4800
Fax: 713-977-4620
www.arcadis.com
Texas Registered Engineering Firm F-533

SURVEYED BY: AMANI ENGR.
FB NO. P-6335

STATE OF TEXAS
DAVID F. RIDGWAY
105134
LICENSED
PROFESSIONAL ENGINEER
11/21/2025

CITY OF HOUSTON

HOUSTON PUBLIC WORKS

LIFT STATION REHABILITATION & RECONSTRUCTION CONSENT DECREE

BRETSHIRE #1 LIFT STATION WET WELL PLAN

M-1

WBS NUMBER	FOR CITY OF HOUSTON USE ONLY
R-000267-0175-4	
DRAWING SCALE	
AS NOTED	
CITY OF HOUSTON PM	
NP NAWARAJ PANTA, P.E.	
SHEET NO. 38 OF 312	

FILE PATH: C:\Users\guldagak0287\DC\ACCDocs\Arcadis ACC US\AUS-30126616-Lift Station Rehab And Reconstruct CMAR\Project Files\10_WIP\20-Bretshire#1\10T-M-Mechanical\M-1.dwg
PLOT STYLE: COH.ctb PLOTTED: 11/21/2025 8:15 PM

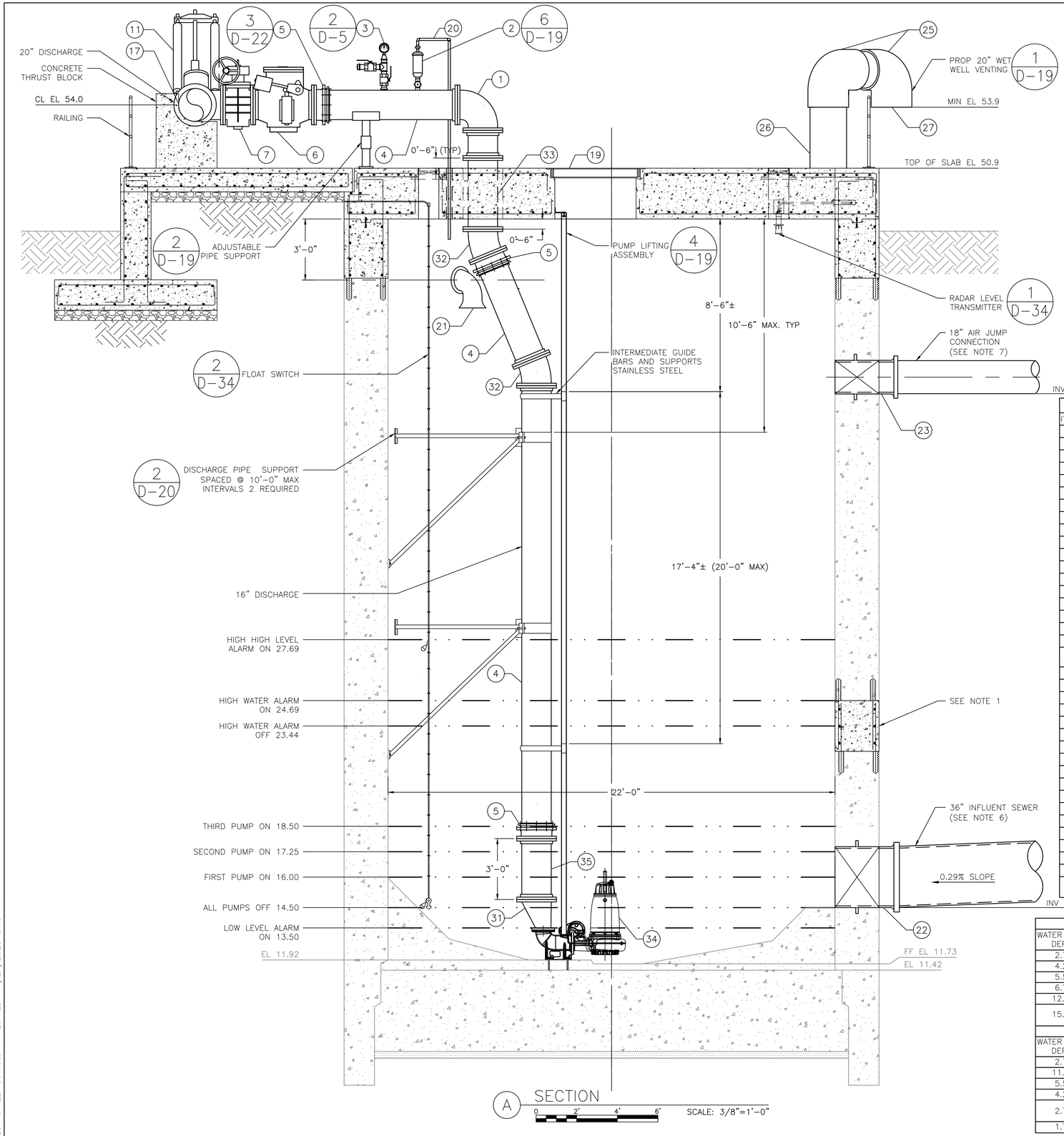

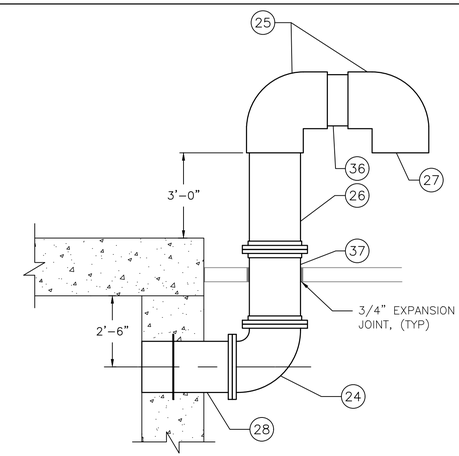

WET WELL VENT

B SECTION
0 2' 4' 6'
SCALE: 3/8"=1'-0"

PIPE FITTING SCHEDULE			
ITEM NO.	QUANTITY	SIZE	ITEM
1	4	16"	D.I. 90° ELL, FLG X FLG
2	4/1	3"/3"	AIR & VACUUM VALVE / COMBINED AIR VALVE
3	5	2 1/2"	PRESSURE GAUGE
4	12	16"	D.I. PIPE FLG X PE
5	12	16"	RESTRAINED FLANGED COUPLING ADAPTER
6	4	16"	SWING CHECK VALVE, FLG X FLG
7	4	16"	PLUG VALVE, FLG X FLG
8	4	18" X 16"	D.I. REDUCING TEE, FLG
9	3	18"	D.I. PIPE, FLG X FLG
10	1	18" X 10"	D.I. REDUCER, FLG X FLG
11	1	10"	SURGE RELIEF VALVE, FLG X FLG
12	1	10"	D.I. 90° ELL W / BASE, FLG X FLG
13	1	10"	D.I. PIPE, FLG X FLG
14	1	10"	D.I. 45° ELL, MJ X MJ (RESTRAINED)
15	1	10"	WALL PIPE, FLG X MJ (RESTRAINED)
16	1	20" X 18"	D.I. REDUCER, FLG X FLG
17	1	20"	D.I. PIPE, FLG X FLG
18	1	20"	D.I. 90° ELL, FLG X FLG
19	4	4'-0" X 3'-0"	DOUBLE LEAF WATERPROOF ACCESS HATCH COVER WITH POWDER COATED ALUMINIUM PROTECTIVE GRATING PANEL.
20	4	1"	SS AIR RELEASE DRAIN LINE PIPE, PE X PE
21	1	10"	D.I. 90° ELL, FLG X FLARE
22	1	36"	WALL PIPE W/WATERSTOP COLLAR P.E. X P. ON, D.I.
23	1	18"	WALL PIPE W/WATERSTOP COLLAR P.E. X P. ON, D.I.
24	1	20"	316 SS OR FRP 90° ELL, FLG X FLG
25	2	20"	316 SS OR FRP 90° ELL, W/ P. ON WELDED
26	1	20"	316 SS OR FRP PIPE, FLG X P.ON/WELDED
27	1	20"	SS BIRD SCREEN
28	1	20"	WALL PIPE W/WATERSTOP COLLAR P.E. X FLG, D.I.
29	1	10"	D.I. 90° ELL, FLG X FLG
30	1	10"	D.I. 90° ELL, MJ X MJ
31	4	8" X 16"	D.I. ECC. REDUCER, FLG X FLG
32	8	16"	D.I. 22.5° ELL, FLG X FLG
33	4	16"	WALL PIPE, FLG X FLG
34	4	–	SUBMERSIBLE PUMP
35	4	16"	D.I. PIPE, FLG X FLG
36	1	20"	316 SS OR FRP PIPE, P.ON/WELDED X P.ON/WELDED
37	1	20"	316 SS OR FRP OR D.I. PIPE, FLG X FLG / WELD/P.ON

STATION OPERATION TABLES

RISING LEVEL CYCLE			
WATER LEVEL DEPTH	WATER LEVEL ELEVATION	ACTION	PUMP(S) IN OPERATION
2.77	14.50	PUMPS OFF LEVEL – NO ACTION	ALL PUMPS ARE OFF
4.27	16.00	LEAD PUMP TURNS ON	LEAD PUMP ON
5.52	17.25	SECOND PUMP TURNS ON	LEAD & SECOND PUMPS ON
6.77	18.50	THIRD PUMP TURNS ON	LEAD, SECOND & THIRD PUMPS ON
12.96	24.69	HIGH WATER ALARM ON	HIGH WATER ALARM SOUND
15.96	27.69	HIGH HIGH LEVEL ALARM (FLOAT ON LEVEL)	ALL DUTY PUMPS ON (FLOATS)
FALLING LEVEL CYCLE			
WATER LEVEL DEPTH	WATER LEVEL ELEVATION	ACTION	PUMP(S) IN OPERATION
2.77	14.50	FLOAT OFF LEVEL	ALL PUMPS OFF (FLOATS)
11.71	23.44	HIGH WATER LEVEL ALARM OFF	LEAD, SECOND & THIRD PUMPS ON
5.52	17.25	LEAD PUMP TURNS OFF	SECOND & THIRD PUMPS ON
4.27	16.00	SECOND PUMP TURNS OFF	THIRD PUMPS ON
2.77	14.50	THIRD PUMP TURNS OFF	ALL PUMPS STOPPED – STANDBY PUMP SWITCHES TO LEAD PUMP
1.77	13.50	LOW LEVEL ALARM ON	–

NOTES:

1. REFER TO STRUCTURAL PLAN FOR REPAIR.
2. CONNECT NEW 20" DI DISCHARGE HEADER WITH EXISTING 20" DI FORCE MAIN.
3. ALL ITEMS LISTED HEREIN SHALL CONFORM TO PROJECT SPECIFICATIONS.
4. FOR PIPE SCHEDULE, SEE PIPE FITTING SCHEDULE THIS SHEET.
5. PUMP MANUFACTURER TO PROVIDE ENGINEERED SHOP DRAWINGS FOR WATERPROOF ACCESS HATCH SEALED BY A LICENSED ENGINEER FOR DEFERRED SUBMITTAL TO CODE ENFORCEMENT FROM CITY APPROVED FABRICATOR.
6. SEE SHEET C–9 & C–10 FOR CONTINUATION OF 36" INFLUENT SEWER AND ENTRY OF 30" INFLUENT SEWER AT AUXILIARY WET WELL (MH–F).
7. CONNECT 18" AIR JUMP CONNECTION TO THE AUXILIARY WET WELL. REFER SHEET C–9 FOR LOCATION OF AUXILIARY WET WELL.
8. CONTRACTOR TO PROVIDE SHOP DRAWINGS FOR EIGHT VANE ANTI–VORTEX DEVICE AT PUMP SUCTION.
9. ALL PIPING, VALVES, HATCHES TO BE PAINTED / COATED PER SPEC 09901. PUMP NUMBER TO BE LABELED ON ACCESS HATCHES COVERS.

NO.	DATE	REVISION	APP.

ARCADIS
Infrastructure · Water · Environment · Buildings
1330 Post Oak Blvd, Suite 2250
Houston, TX 77056
Tel: 713–953–4800
Fax: 713–977–4620
www.arcadis.com
Texas Registered Engineering Firm F–533

SURVEYED BY: AMANI ENGR.
FB NO. P–6335

STATE OF TEXAS
DAVID F. RIDGWAY
105134
LICENSED PROFESSIONAL ENGINEER
12/12/2025

CITY OF HOUSTON
HOUSTON PUBLIC WORKS

LIFT STATION REHABILITATION & RECONSTRUCTION CONSENT DECREE

BRETSHIRE #1 LIFT STATION WET WELL SECTION

M–2

WBS NUMBER	FOR CITY OF HOUSTON USE ONLY
R–000267–0175–4	
DRAWING SCALE	
AS NOTED	
CITY OF HOUSTON PM	
NP NAWARAJ PANTA, P.E.	
SHEET NO. 39 OF 312	

FILE PATH: C:\Users\guldagk0287\DC\ACCDocs\Arcadis ACC US\AUS–30126616–Lift Station Rehab And Reconstruct CMAR\Project Files\10_WIP\20–Bretshire#1\10T–M–Mechanical\M–2.dwg
PLOT STYLE: COH.ctb PLOTTED: 11/21/2025 8:15 PM

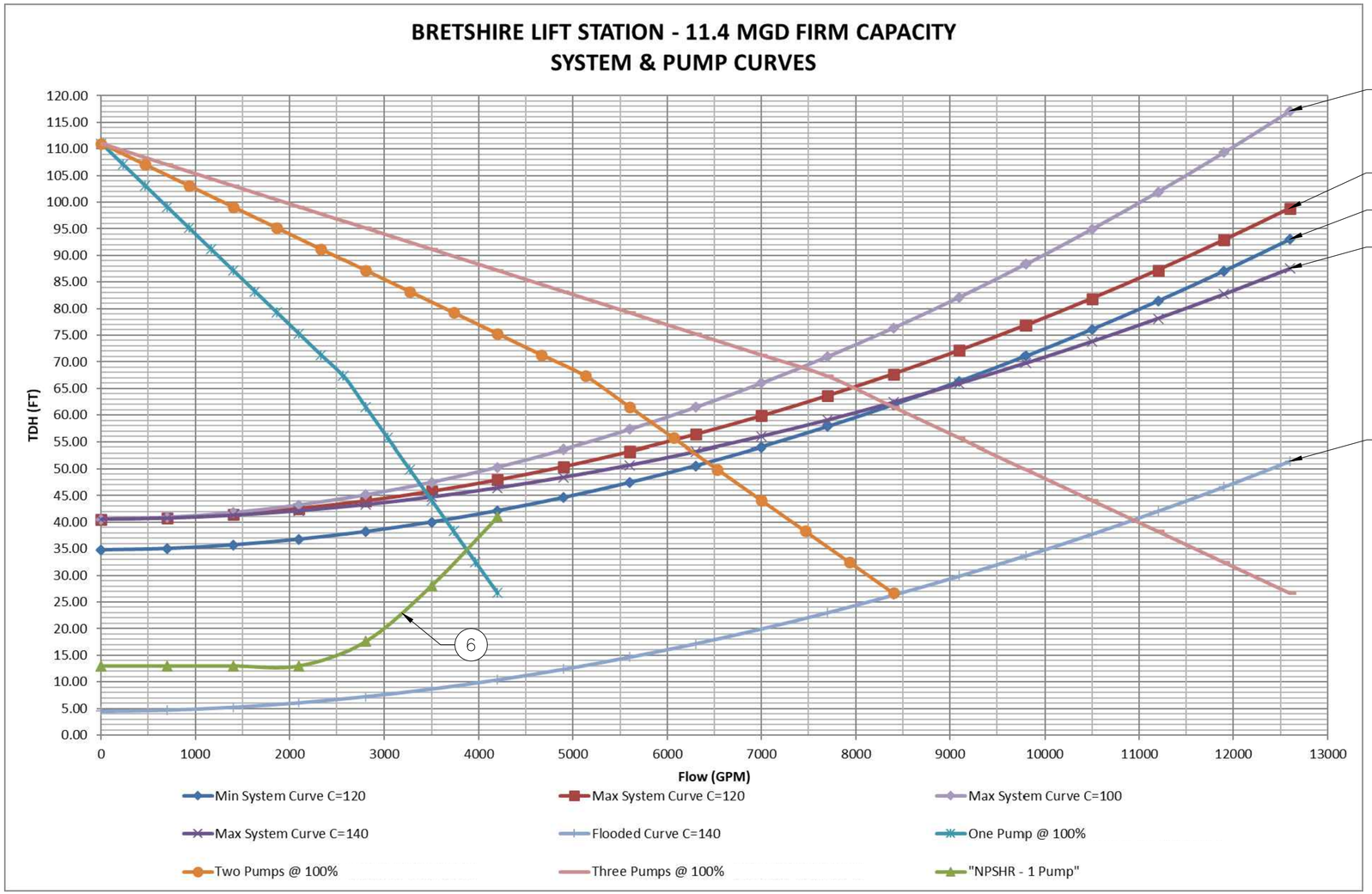

PUMP CURVE NOTES:

1. LOW NORMAL OPERATING LEVEL C=120 – DESIGN.
2. HIGH NORMAL OPERATING LEVEL C=100 – INFORMATION ONLY (TCEQ).
3. HIGH NORMAL OPERATING LEVEL C=120 – DESIGN
4. HIGH NORMAL OPERATING LEVEL C=140 – INFORMATION ONLY
5. EMERGENCY FLOODED OPERATING LEVEL C=140 – MAXIMUM DISCHARGE
6. NET POSITIVE HEAD SUCTION REQUIRED (NPSHR) BASED ON NORMAL OPERATING WATER LEVEL

PUMP CHARACTERISTICS	PUMP NO. 1	PUMP NO. 2	PUMP NO. 3	PUMP NO. 4
MOTOR DATA NOMINAL SIZE (HP) MAX SPEED (RPM)	60 1170	60 1170	60 1170	60 1170
SOLIDS PASSAGE MIN. SPHERE (IN)	3	3	3	3
CAPACITY (GPM) DESIGN RUNOUT	2,639 4,392	2,639 4,392	2,639 4,392	2,639 4,392
DISCHARGE HEAD (FT.) DESIGN RUNOUT SHUT OFF	62.06 25 111	62.06 25 111	62.06 25 111	62.06 25 111
EFFICIENCY (%)	78.2	78.2	78.2	78.2
NPSHR (FT) DESIGN RUNOUT	15.8 31.5	15.8 31.5	15.8 31.5	15.8 31.5
PUMP CYCLE TIME (MIN.)	10	10	10	10
CUMULATIVE CAPACITY (GPM)	3,500	6,100	7,916	–
NPSHA (FT)	31.5	31.5	31.5	31.5

ARCADIS
Infrastructure · Water · Environment · Buildings
1330 Post Oak Blvd, Suite 2250
Houston, TX 77056
Tel: 713-953-4800
Fax: 713-977-4620
www.arcadis.com
Texas Registered Engineering Firm F-533

SURVEYED BY: AMANI ENGR.
FB NO. P-6335

STATE OF TEXAS
DAVID F. RIDGWAY
105134
LICENSED
PROFESSIONAL ENGINEER
03/12/2026

CITY OF HOUSTON

HOUSTON PUBLIC WORKS

LIFT STATION REHABILITATION & RECONSTRUCTION CONSENT DECREE

BRETSHIRE #1 LIFT STATION WET WELL PUMP CURVE DATA

M-3

WBS NUMBER	FOR CITY OF HOUSTON USE ONLY
R-000267-0175-4	
DRAWING SCALE	
AS NOTED	
CITY OF HOUSTON PM	
NP NAWARAJ PANTA, P.E.	
SHEET NO. 40 OF 312	

NO.	DATE	REVISION	APP.

FILE PATH: C:\Users\omesson\DC\ACCDocs\Arcadis ACC US\AUS-30126616-Lift Station Rehab And Reconstruct CMAR\Project Files\10_WIP\20-Bretshire#1\10T-M-Mechanical\M-3.dwg
PLOT STYLE: Coh_ctb_23BOWTED: 3/20/2026 11:24 AM

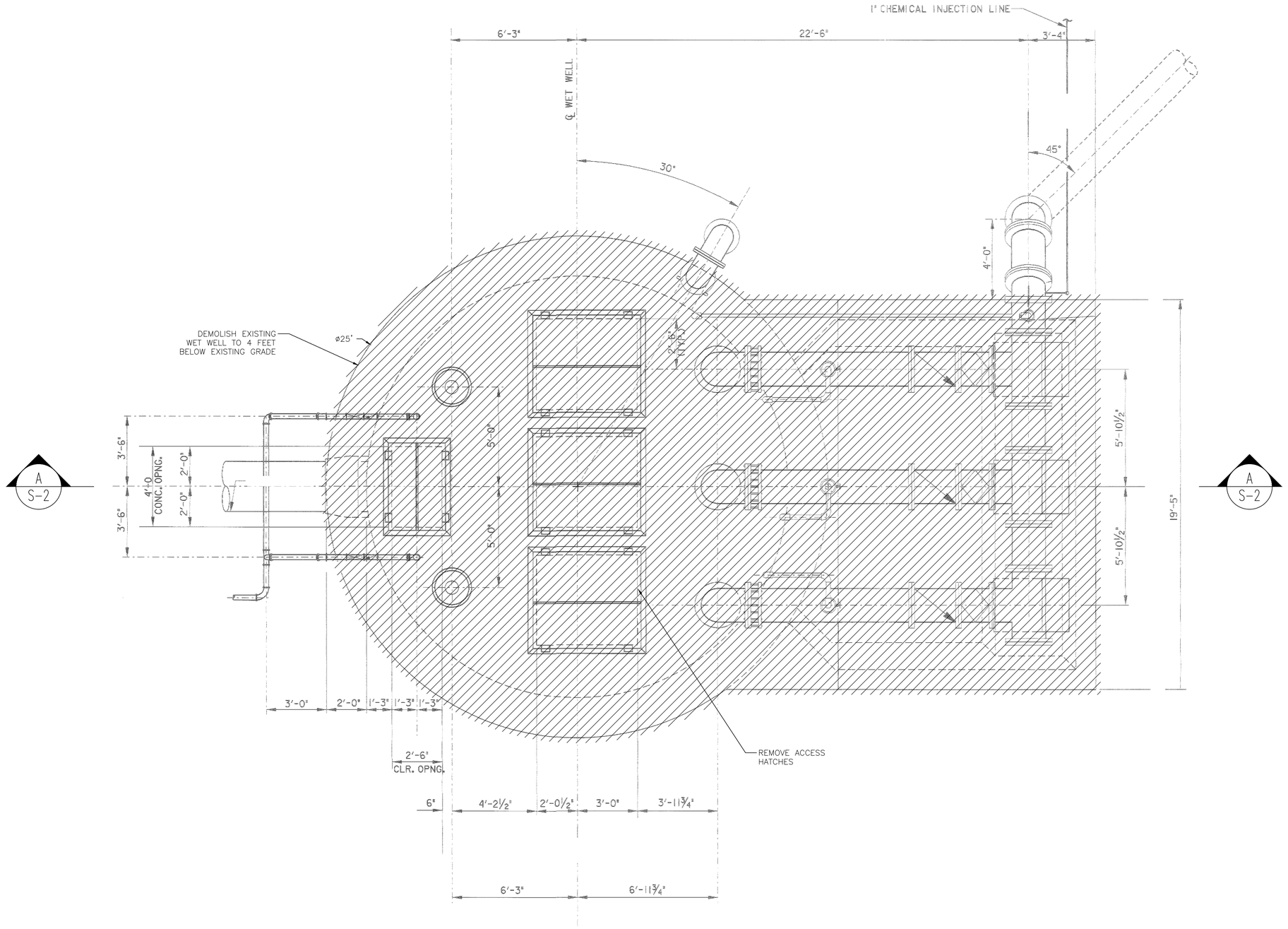

DEMOLITION PLAN @ EL. 49.39'

0 2' 4' 6'

SCALE: 3/8"=1'-0"

NO.	DATE	REVISION	APP.

DEMOLITION NOTES:

1. BACKGROUND OF THIS DRAWING IS BASED ON RECORD DRAWING NO. 32181. CONTRACTOR SHALL BE RESPONSIBLE FOR VERIFYING EXISTING CONDITIONS PRIOR TO SUBMITTING BID.
2. THE CITY OF HOUSTON (COH) HAS THE FIRST RIGHT OF REFUSAL OF ANY EQUIPMENT OR MATERIAL REMOVED. CONTACT CONSTRUCTION MANAGER AT LEAST 72 HOURS PRIOR TO DEMOLITION IN ORDER TO SALVAGED ITEMS TO A LOCATION WITHIN THE CITY. THE CONTRACTOR SHALL PROPERLY DISPOSE OF ALL OTHER MATERIAL NOT IDENTIFIED FOR SALVAGE.
3. EXISTING WET WELL SHALL BE CLEANED OF ALL DEBRIS, WASTEWATER DEMOLITION WASTE AND OTHER RESIDUES BY CITY OF HOUSTON APPROVED CERTIFIED DISPOSAL CONTRACTOR, REFER TO NOTES ON SHEET C-2.
4. CONTRACTOR SHALL OBTAIN CITY OF HOUSTON DEMOLITION PERMIT OR SUBMIT PROOF OF NON-APPLICABILITY TO COH CONSTRUCTION PROJECT MANAGER PRIOR TO THE DEMOLITION ACTIVITIES AT THE SITE.
5. DO NOT DISTURB ANY EXISTING STRUCTURE THAT ABUTS A STRUCTURE TO BE REMOVED. ANY DAMAGES TO STRUCTURES THAT ARE NOT INDICATED TO BE DEMOLISHED/REMOVED, OR THAT ARE OUTSIDE OF THE CONSTRUCTION LIMITS SHALL BE REPAIRED AT NO ADDITIONAL COST TO THE CITY AND AT NO COST TO THE PROPERTY OWNER.

LEGEND:

TO BE DEMOLISHED

ARCADIS
Infrastructure · Water · Environment · Buildings
1330 Post Oak Blvd, Suite 2250
Houston, TX 77056
Tel: 713-953-4800
Fax: 713-977-4620
www.arcadis.com
Texas Registered Engineering Firm F-533

SURVEYED BY: AMANI ENGR.
FB NO. P-6335

STATE OF TEXAS
TANVIR HOSSAIN
121767
LICENSED PROFESSIONAL ENGINEER

CITY OF HOUSTON

HOUSTON PUBLIC WORKS

LIFT STATION REHABILITATION & RECONSTRUCTION CONSENT DECREE

BRETSHIRE #1 LIFT STATION WET WEATHER WET WELL DEMOLITION PLAN

S-1

WBS NUMBER	FOR CITY OF HOUSTON USE ONLY
R-000267-0175-4	
DRAWING SCALE	
AS NOTED	
CITY OF HOUSTON PM	
NP NAWARAJ PANTA, P.E.	
SHEET NO. 41 OF 312	

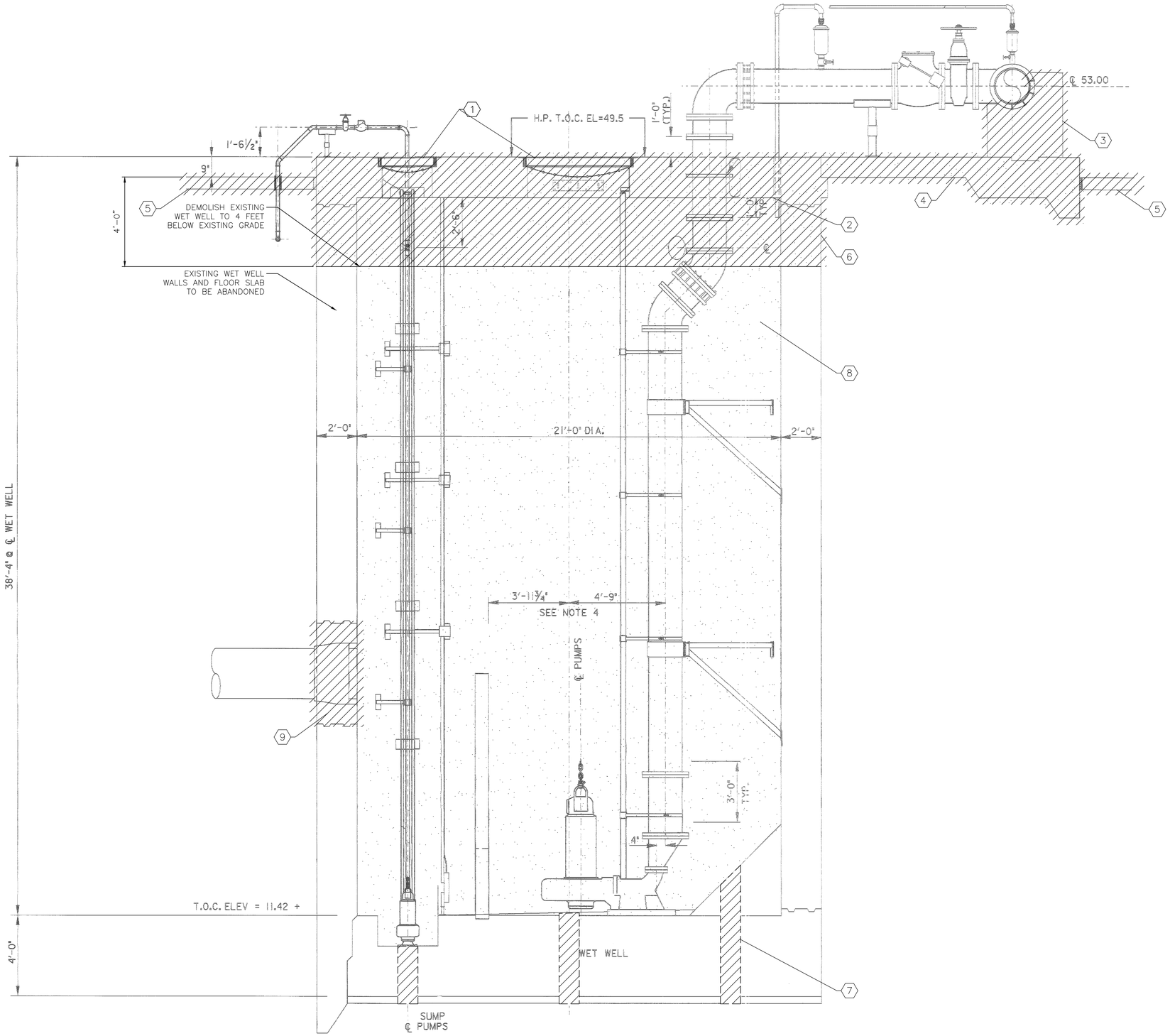

A SECTION

0 2' 4' 6' SCALE: 3/8"=1'-0"

NO.	DATE	REVISION	APP.

DEMOLITION NOTES:

1. REMOVE ACCESS HATCH ON TOP OF WET WELL TOP SLAB.
2. REMOVE WET WELL TOP SLAB.
3. REMOVE THRUST BLOCKS ON CONCRETE PAD OF WET WELL.
4. REMOVE TOP OF CONCRETE PAD AROUND THE WET WELL.
5. REMOVE PAVEMENT STRUCTURE AND EQUIPMENT PADS ON EXISTING GRADE.
6. REMOVE WET WELL WALLS TO 4 FEET BELOW EXISTING GRADE.
7. PROVIDE SIX, 6-INCH DIA CORE HOLES, REFER TO NOTE 12 SHEET C-2.
8. BACK FILL WITH CEMENT STABILIZED SAND TO PAVEMENT SUBGRADE.
9. GROUT FILL WALL OPENING.

LEGEND:

TO BE DEMOLISHED

BACK FILL WITH CEMENT STABILIZED FILL TO PAVEMENT SUBGRADE

ARCADIS
Infrastructure · Water · Environment · Buildings
1330 Post Oak Blvd, Suite 2250
Houston, TX 77056
Tel: 713-953-4800
Fax: 713-977-4620
www.arcadis.com
Texas Registered Engineering Firm F-533

SURVEYED BY: AMANI ENGR.
FB NO. P-6335

STATE OF TEXAS
TANVIR HOSSAIN
121767
LICENSED PROFESSIONAL ENGINEER

CITY OF HOUSTON

HOUSTON PUBLIC WORKS

LIFT STATION REHABILITATION & RECONSTRUCTION CONSENT DECREE

BRETSHIRE #1 LIFT STATION WET WEATHER WET WELL DEMOLITION SECTION

S-2

WBS NUMBER	FOR CITY OF HOUSTON USE ONLY
R-000267-0175-4	
DRAWING SCALE	
AS NOTED	
CITY OF HOUSTON PM	
NP NAWARAJ PANTA, P.E.	
SHEET NO. 42 OF 312	

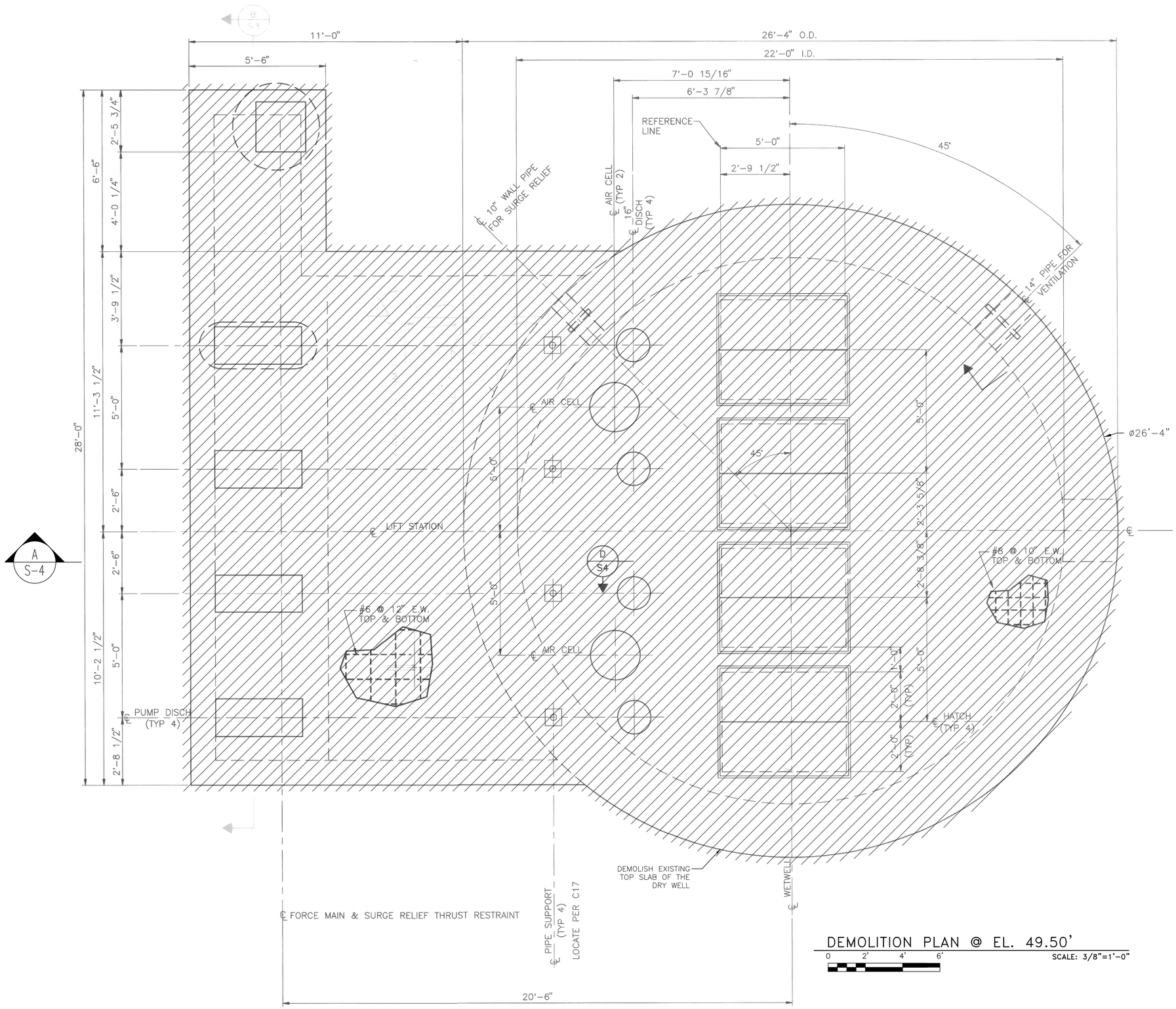

DEMOLITION PLAN @ EL. 49.50'

0 2' 4' 6'

SCALE: 3/8"=1'-0"

N

NO.	DATE	REVISION	APP.

DEMOLITION NOTES:

1. BACKGROUND OF THIS DRAWING IS BASED ON RECORD DRAWING NO. 31200. CONTRACTOR SHALL BE RESPONSIBLE FOR VERIFYING EXISTING CONDITIONS PRIOR TO SUBMITTING BID.
2. THE CITY OF HOUSTON (COH) HAS THE FIRST RIGHT OF REFUSAL OF ANY EQUIPMENT OR MATERIAL REMOVED. CONTACT CONSTRUCTION MANAGER AT LEAST 72 HOURS PRIOR TO DEMOLITION IN ORDER TO SALVAGED ITEMS TO A LOCATION WITHIN THE CITY. THE CONTRACTOR SHALL PROPERLY DISPOSE OF ALL OTHER MATERIAL NOT IDENTIFIED FOR SALVAGE.
3. EXISTING WET WELL SHALL BE CLEANED OF ALL DEBRIS, WASTEWATER DEMOLITION WASTE AND OTHER RESIDUES BY CITY OF HOUSTON APPROVED CERTIFIED DISPOSAL CONTRACTOR, REFER TO NOTES ON SHEET C-2.
4. CONTRACTOR SHALL OBTAIN CITY OF HOUSTON DEMOLITION PERMIT OR SUBMIT PROOF OF NON-APPLICABILITY TO COH CONSTRUCTION PROJECT MANAGER PRIOR TO THE DEMOLITION ACTIVITIES AT THE SITE.
5. DO NOT DISTURB ANY EXISTING STRUCTURE THAT ABUTS A STRUCTURE TO BE REMOVED. ANY DAMAGES TO STRUCTURES THAT ARE NOT INDICATED TO BE DEMOLISHED/REMOVED, OR THAT ARE OUTSIDE OF THE CONSTRUCTION LIMITS SHALL BE REPAIRED AT NO ADDITIONAL COST TO THE CITY AND AT NO COST TO THE PROPERTY OWNER.

LEGEND:

TO BE DEMOLISHED

ARCADIS
Infrastructure · Water · Environment · Buildings
1330 Post Oak Blvd, Suite 2250
Houston, TX 77056
Tel: 713-953-4800
Fax: 713-977-4620
www.arcadis.com
Texas Registered Engineering Firm F-533

SURVEYED BY: AMANI ENGR.
FB NO. P-6335

STATE OF TEXAS · TANVIR HOSSAIN · 121767 · LICENSED PROFESSIONAL ENGINEER

CITY OF HOUSTON

HOUSTON PUBLIC WORKS

LIFT STATION REHABILITATION & RECONSTRUCTION CONSENT DECREE

BRETSHIRE #1 LIFT STATION DRY WEATHER WET WELL DEMOLITION PLAN

S-3

WBS NUMBER	FOR CITY OF HOUSTON USE ONLY
R-000267-0175-4	
DRAWING SCALE	
AS NOTED	
CITY OF HOUSTON PM	
NP NAWARAJ PANTA, P.E.	
SHEET NO. 43 OF 312	

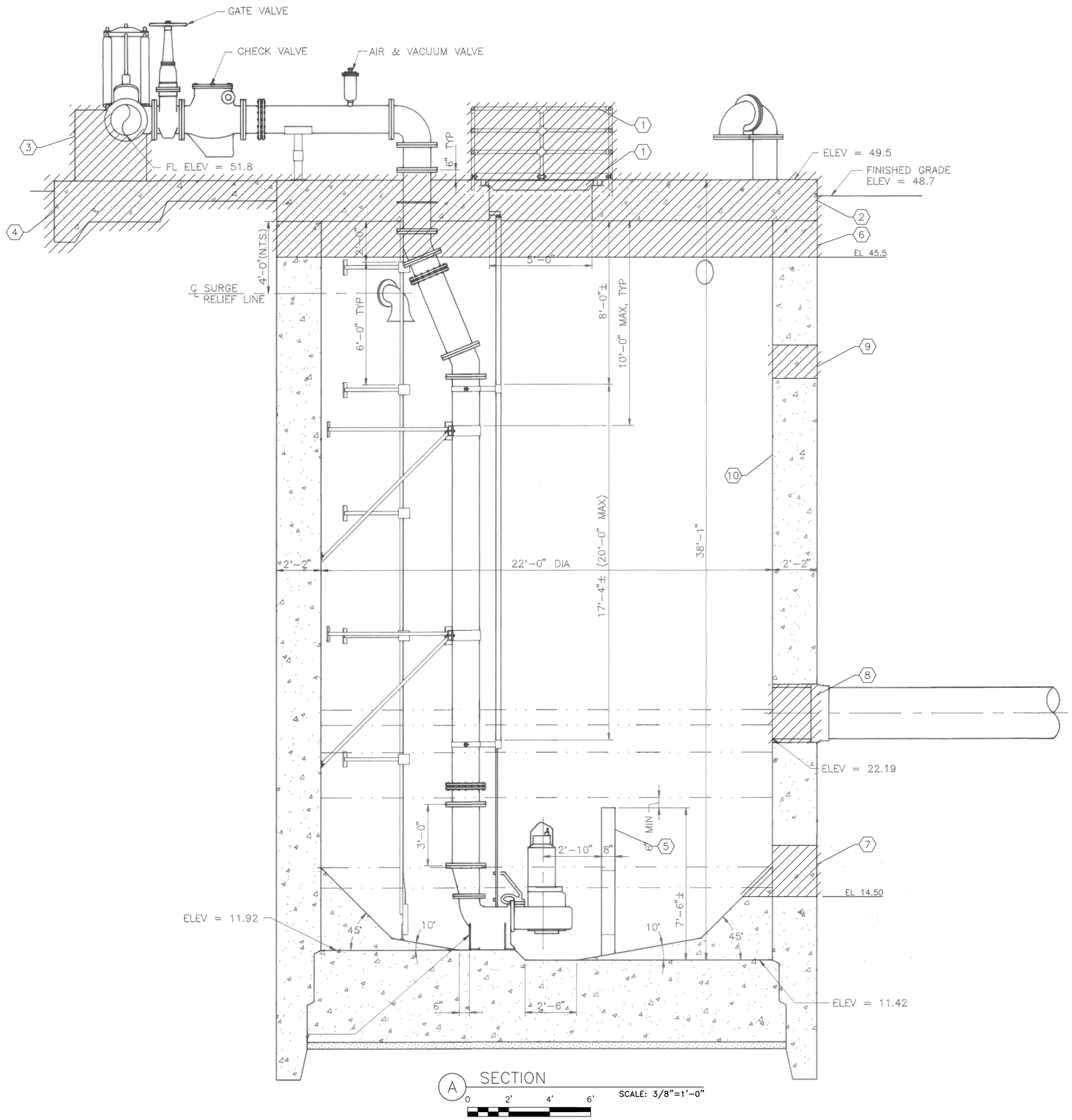

A SECTION

SCALE: 3/8"=1'-0"

0 2' 4' 6'

NO.	DATE	REVISION	APP.

DEMOLITION NOTES:

1. REMOVE ACCESS HATCH AND RAILING ON TOP OF WET WELL TOP SLAB.
2. REMOVE WET WELL TOP SLAB.
3. REMOVE THRUST BLOCKS ON CONCRETE PAD OF WET WELL.
4. REMOVE CONCRETE PAD AROUND THE WET WELL.
5. BAFFLE WALL TO REMAIN.
6. REMOVE WET WELL WALLS 4 FEET FROM TOP SLAB.
7. PROVIDE WALL AND GROUT OPENING FOR 36" CONNECTION PIPE.
8. GROUT FILL WALL OPENING.
9. PROVIDE WALL OPENING FOR 18" AIR JUMP CONNECTION PIPE.
10. REMOVE EXISTING COATING / LINER SYSTEM.

LEGEND:

TO BE DEMOLISHED

ARCADIS
Infrastructure · Water · Environment · Buildings
1330 Post Oak Blvd, Suite 2250
Houston, TX 77056
Tel: 713-953-4800
Fax: 713-977-4620
www.arcadis.com
Texas Registered Engineering Firm F-533

SURVEYED BY: AMANI ENGR.

FB NO. P-6335

STATE OF TEXAS
TANVIR HOSSAIN
121767
LICENSED PROFESSIONAL ENGINEER

CITY OF HOUSTON

HOUSTON PUBLIC WORKS

LIFT STATION REHABILITATION & RECONSTRUCTION CONSENT DECREE

BRETSHIRE #1 LIFT STATION DRY WEATHER WET WELL DEMOLITION SECTION

S-4

WBS NUMBER	FOR CITY OF HOUSTON USE ONLY
R-000267-0175-4	
DRAWING SCALE	
AS NOTED	
CITY OF HOUSTON PM	
NP NAWARAJ PANTA, P.E.	
SHEET NO. 44 OF 312	

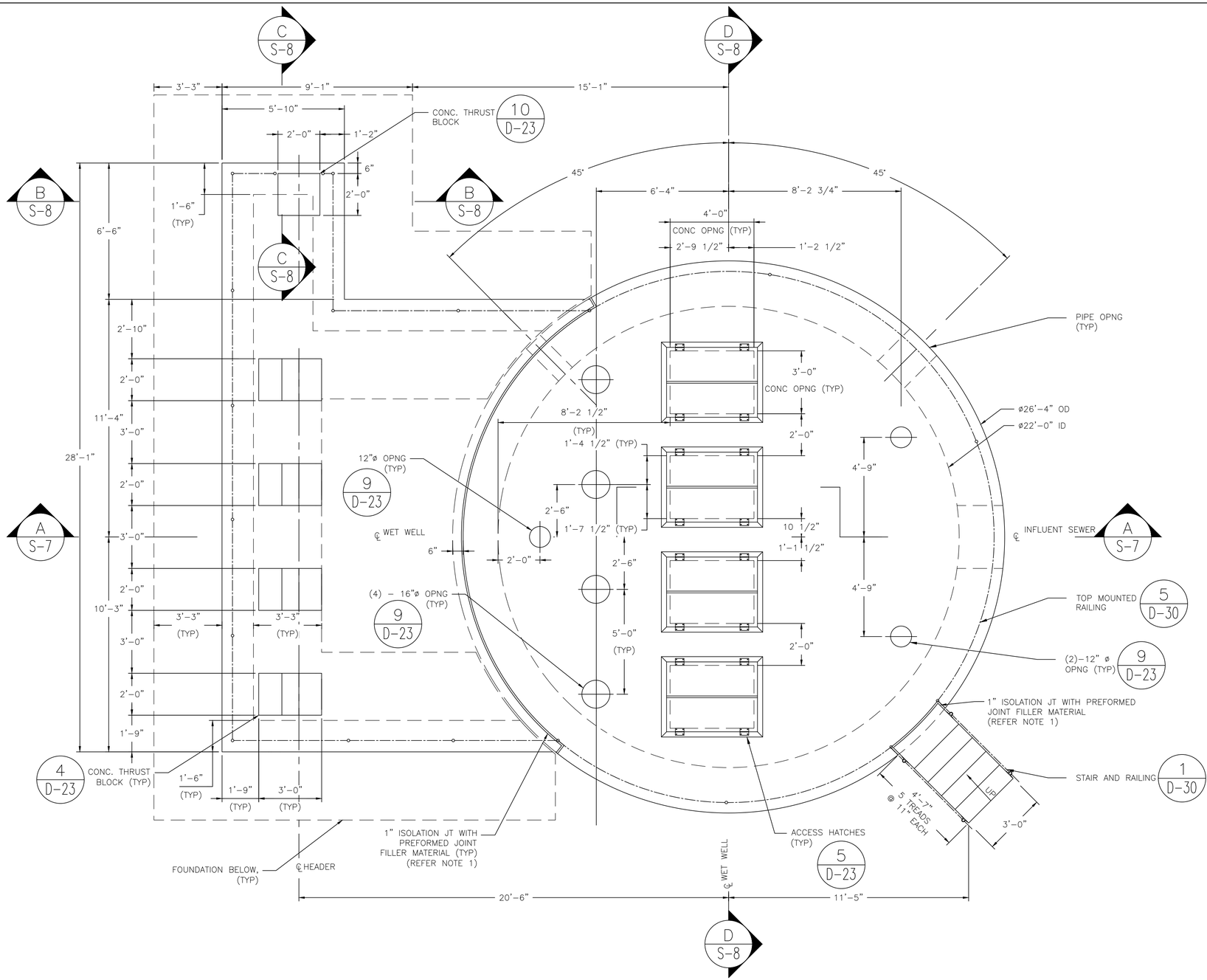

PLAN VIEW @ EL 50.90

0 2' 4' 6'

SCALE: 3/8"=1'-0"

NO.	DATE	REVISION	APP.

NOTES:

1. FOR ISOLATION JT REFER TO COH SPEC. 03151.

ARCADIS
Infrastructure · Water · Environment · Buildings
1330 Post Oak Blvd, Suite 2250
Houston, TX 77056
Tel: 713-953-4800
Fax: 713-977-4620
www.arcadis.com
Texas Registered Engineering Firm F-533

SURVEYED BY: AMANI ENGR.
FB NO. P-6335

STATE OF TEXAS
TANVIR HOSSAIN
121767
LICENSED PROFESSIONAL ENGINEER

CITY OF HOUSTON

HOUSTON PUBLIC WORKS

LIFT STATION REHABILITATION & RECONSTRUCTION CONSENT DECREE

BRETSHIRE #1 LIFT STATION WET WELL PLAN

S-5

WBS NUMBER	FOR CITY OF HOUSTON USE ONLY
R-000267-0175-4	
DRAWING SCALE	
AS NOTED	
CITY OF HOUSTON PM	
NP NAWARAJ PANTA, P.E.	
SHEET NO. 45 OF 312	

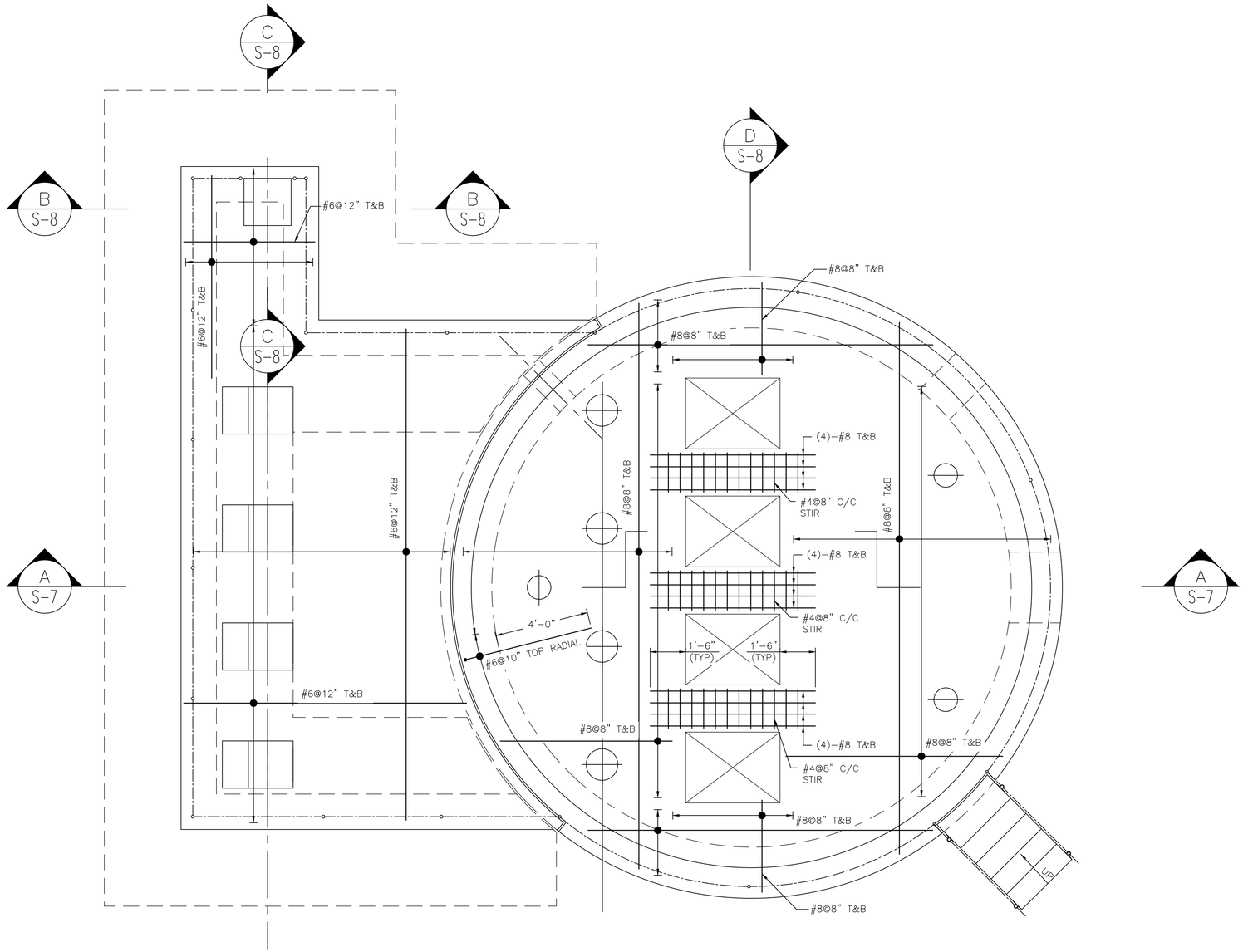

REINFORCEMENT PLAN @ EL 50.90

0 2' 4' 6'

SCALE: 3/8"=1'-0"

N

NO.	DATE	REVISION	APP.

ARCADIS
Infrastructure · Water · Environment · Buildings
1330 Post Oak Blvd, Suite 2250
Houston, TX 77056
Tel: 713-953-4800
Fax: 713-977-4620
www.arcadis.com
Texas Registered Engineering Firm F-533

SURVEYED BY: AMANI ENGR.
FB NO. P-6335

STATE OF TEXAS
TANVIR HOSSAIN
121767
LICENSED
PROFESSIONAL ENGINEER

CITY OF HOUSTON

HOUSTON PUBLIC WORKS

LIFT STATION REHABILITATION & RECONSTRUCTION
CONSENT DECREE

BRETSHIRE #1 LIFT STATION
WET WELL
REINFORCEMENT PLAN

S-6

WBS NUMBER	FOR CITY OF HOUSTON USE ONLY
R-000267-0175-4	
DRAWING SCALE	
AS NOTED	
CITY OF HOUSTON PM	
NP NAWARAJ PANTA, P.E.	
SHEET NO. 46 OF 312	

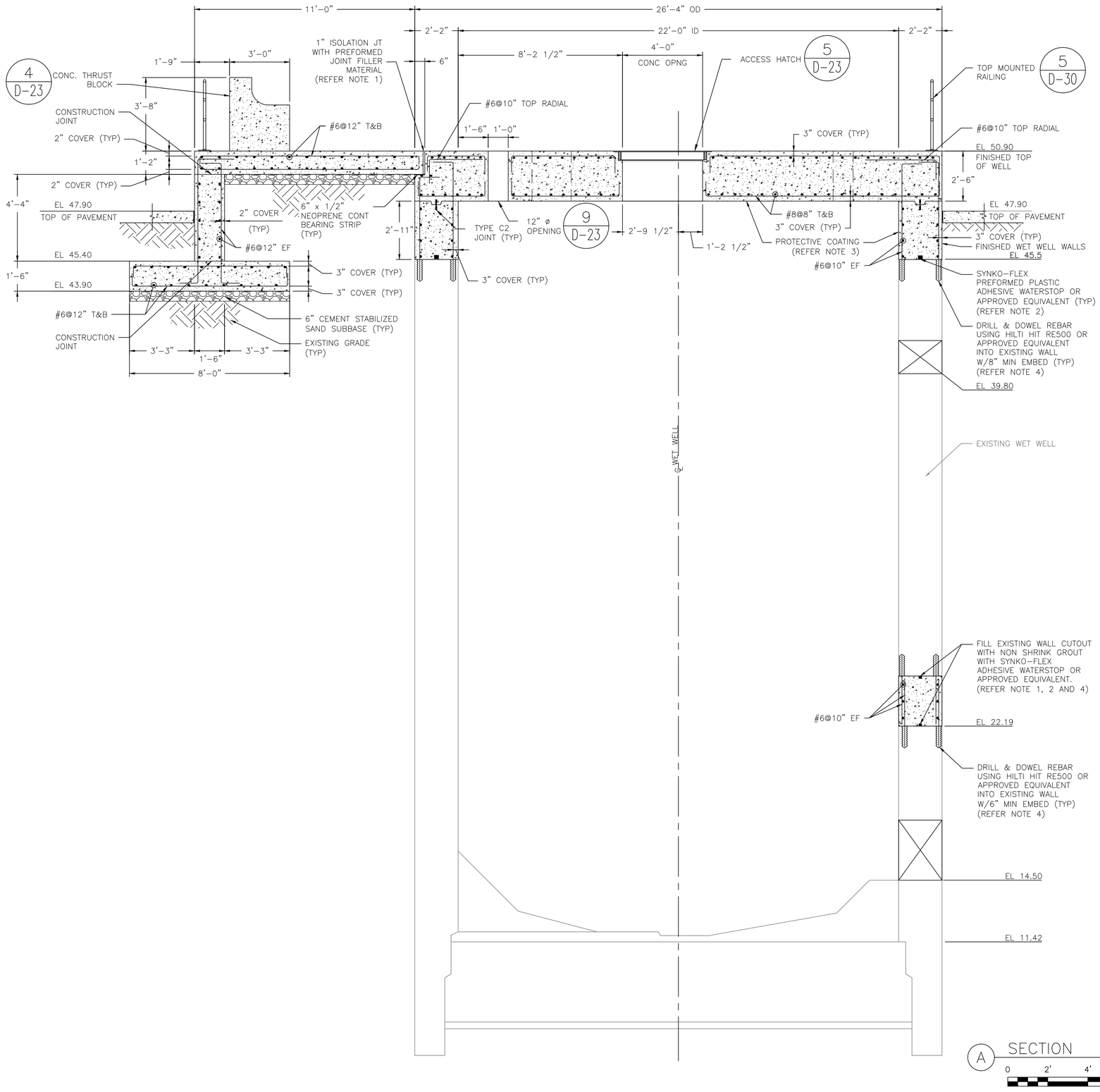

NO.	DATE	REVISION	APP.

NOTES:

1. FOR NON SHRINK GROUT REFER TO SPECIFICATION SECTION 03600.
2. FOR ISOLATION JT AND WATERSTOP REFER TO SPECIFICATION SECTION 03151.
3. PROVIDE PROTECTIVE COATING ON ALL INTERIOR CONCRETE SURFACE OF THE WET WELL. REFER TO PROTECTIVE COATINGS SPECIFICATION SECTION 09901, SYSTEM 108.
4. PRIOR TO DRILLING, LOCATE EXISTING REINFORCING STEEL IN VICINITY OF PROPOSED HOLES USING NON-DESTRUCTIVE METHODS. IF REINFORCING CONFLICTS WITH PROPOSED HOLE LOCATION, OBTAIN ENGINEER'S APPROVAL OF ALTERNATE HOLE LOCATIONS TO AVOID DRILLING THROUGH OR DAMAGING EXISTING REINFORCING BARS.

ARCADIS
Infrastructure · Water · Environment · Buildings
1330 Post Oak Blvd, Suite 2250
Houston, TX 77056
Tel: 713-953-4800
Fax: 713-977-4620
www.arcadis.com
Texas Registered Engineering Firm F-533

SURVEYED BY: AMANI ENGR.
FB NO. P-6335

STATE OF TEXAS
TANVIR HOSSAIN
121767
LICENSED PROFESSIONAL ENGINEER

CITY OF HOUSTON

HOUSTON PUBLIC WORKS

LIFT STATION REHABILITATION & RECONSTRUCTION CONSENT DECREE

BRETSHIRE NO.1 LIFT STATION WET WELL SECTION

S-7

WBS NUMBER	FOR CITY OF HOUSTON USE ONLY
R-000267-0175-4	
DRAWING SCALE	
AS NOTED	
CITY OF HOUSTON PM	
NP NAWARAJ PANTA, P.E.	
SHEET NO. 47 OF 312	

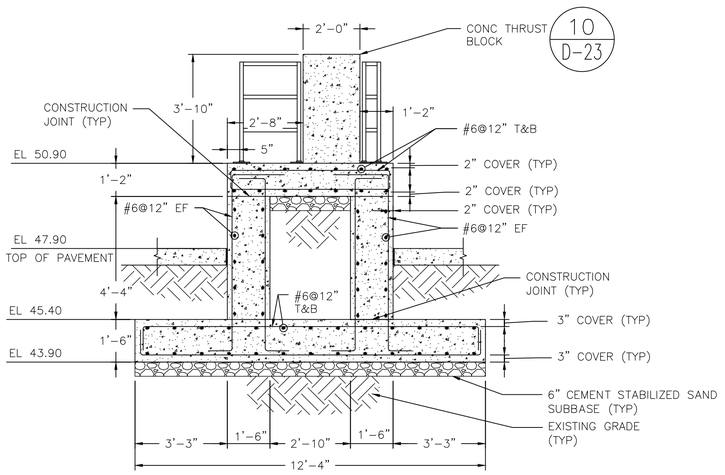

B SECTION

SCALE: 3/8"=1'-0"

0 2' 4' 6'

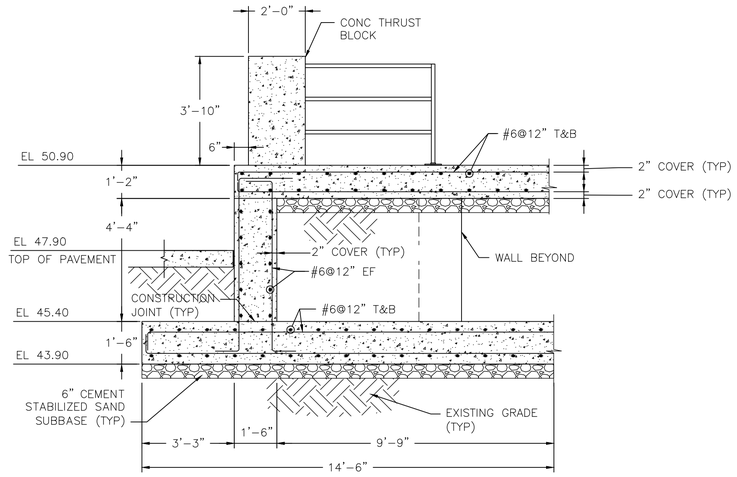

C SECTION

SCALE: 3/8"=1'-0"

0 2' 4' 6'

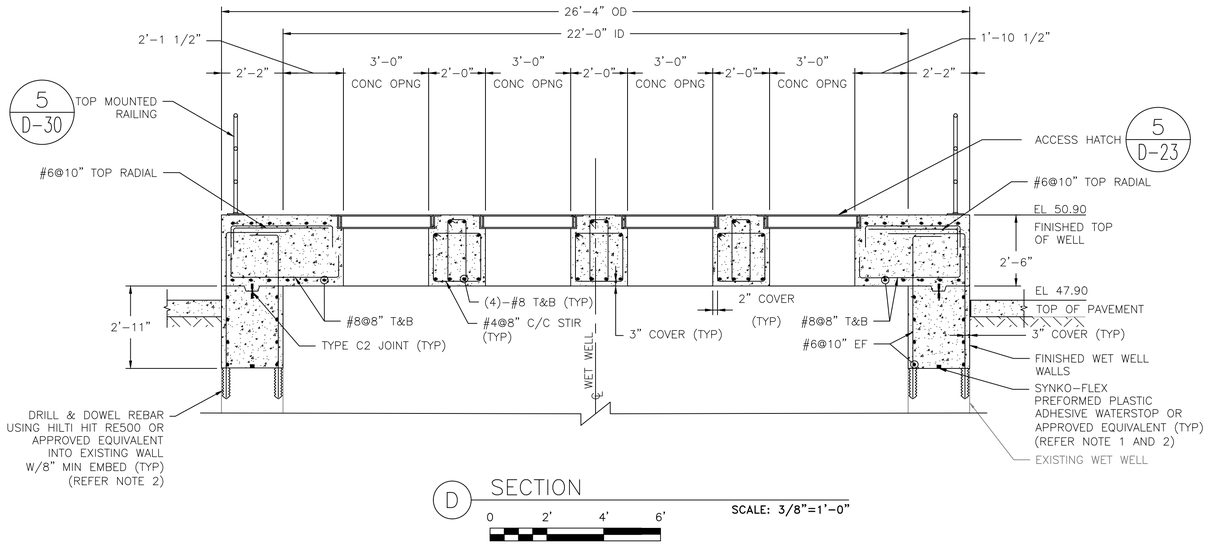

D SECTION

SCALE: 3/8"=1'-0"

0 2' 4' 6'

NOTES:

1. FOR WATERSTOP REFER TO SPECIFICATION SECTION 03151.
2. PRIOR TO DRILLING, LOCATE EXISTING REINFORCING STEEL IN VICINITY OF PROPOSED HOLES USING NON-DESTRUCTIVE METHODS. IF REINFORCING CONFLICTS WITH PROPOSED HOLE LOCATION, OBTAIN ENGINEER'S APPROVAL OF ALTERNATE HOLE LOCATIONS TO AVOID DRILLING THROUGH OR DAMAGING EXISTING REINFORCING BARS.

NO.	DATE	REVISION	APP.

ARCADIS
Infrastructure · Water · Environment · Buildings
1330 Post Oak Blvd, Suite 2250
Houston, TX 77056
Tel: 713-953-4800
Fax: 713-977-4620
www.arcadis.com
Texas Registered Engineering Firm F-533

SURVEYED BY: AMANI ENGR.

FB NO. P-6335

STATE OF TEXAS
TANVIR HOSSAIN
121767
LICENSED PROFESSIONAL ENGINEER

CITY OF HOUSTON

HOUSTON PUBLIC WORKS

LIFT STATION REHABILITATION & RECONSTRUCTION CONSENT DECREE

BRETSHIRE #1 LIFT STATION WET WELL FINISHED SECTION

S-8

WBS NUMBER	FOR CITY OF HOUSTON USE ONLY
R-000267-0175-4	
DRAWING SCALE	
AS NOTED	
CITY OF HOUSTON PM	
NP NAWARAJ PANTA, P.E.	
SHEET NO. 48 OF 312	

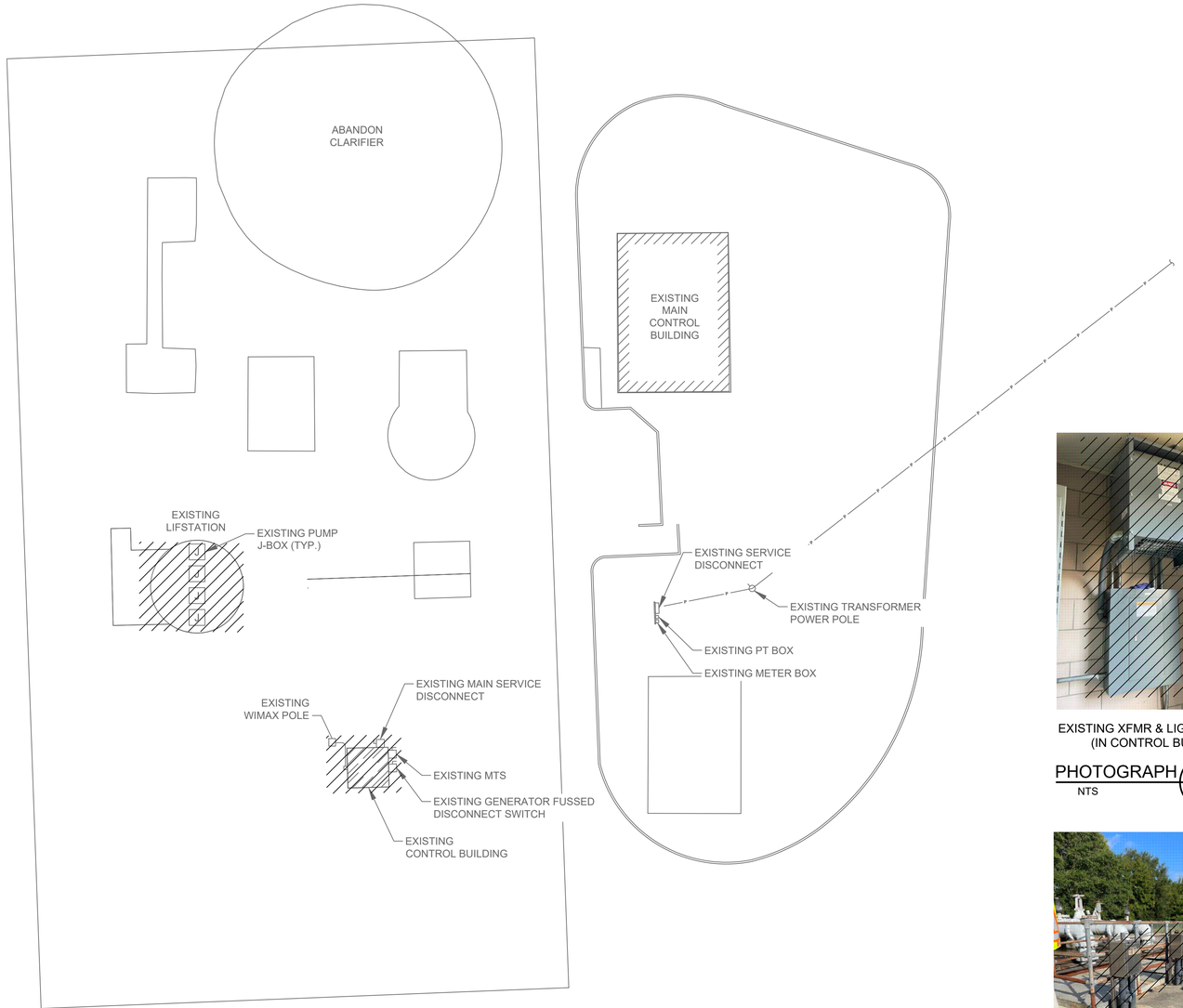

BRETSHIRE NO.1
DEMOLITION SITE

PLAN

1" = 20'-0"

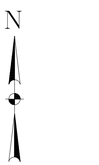

NOTES BY SYMBOL "⟨#⟩":

1. EXISTING WIMAX POLE, CONDUITS AND WIRES TO BE DEMOLISHED AND REMOVED.
2. EXISTING MCC, ASSOCIATED CONDUITS AND WIRES IN ELECTRICAL BUILDING TO BE DEMOLISHED AND REMOVED.
3. EXISTING CONTROL PANEL, ASSOCIATED CONDUITS AND WIRES IN ELECTRICAL BUILDING TO BE DEMOLISHED AND REMOVED.
4. EXISTING TRANSFORMER, LIGHTING PANEL, ASSOCIATED CONDUITS AND WIRES IN ELECTRICAL BUILDING TO BE DEMOLISHED AND REMOVED.
5. EXISTING MTS, GENERATOR DISCONNECT, ASSOCIATED CONDUITS AND WIRES TO BE DEMOLISHED AND REMOVED.
6. EXISTING MAIN SERVICE DISCONNECT, ASSOCIATED CONDUITS AND WIRES TO BE DEMOLISHED AND REMOVED.
7. EXISTING ELECTRICAL EQUIPMENT AND DEVICE(PUMP J-BOXES) IN LIFT STATION TO BE DEMOLISHED AND REMOVED.

NO.	DATE	REVISION	APP.

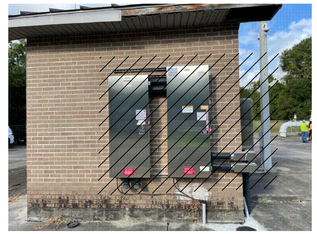

EXISTING GENERATOR & MTS
DISCONNECT SWITCH

PHOTOGRAPH G - ⟨5⟩
NTS

EXISTING XFMR & LIGHTING PANEL
(IN CONTROL BUILDING)

PHOTOGRAPH F - ⟨4⟩
NTS

EXISTING CONTROL PANEL
(IN CONTROL BUILDING)

PHOTOGRAPH E - ⟨3⟩
NTS

EXISTING MCC
(IN CONTROL BUILDING)

PHOTOGRAPH D - ⟨2⟩
NTS

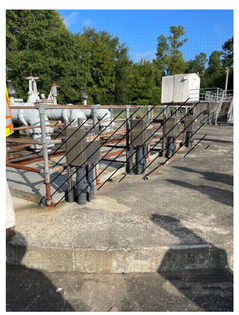

EXISTING LIFT STATION J-BOX
(TYPICAL OF 4)

PHOTOGRAPH A - ⟨7⟩
NTS

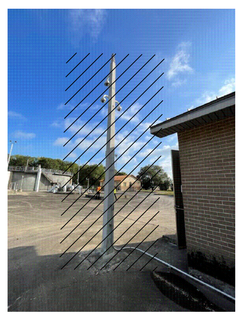

EXISTING WIMAX
POLE

PHOTOGRAPH B - ⟨1⟩
NTS

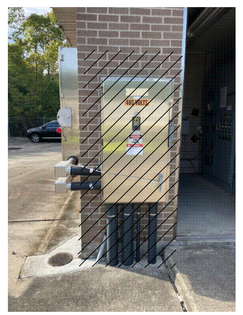

EXISTING MAIN SERVICE
DISCONNECT SWITCH

PHOTOGRAPH C - ⟨6⟩
NTS

LEGEND:

ITEMS TO BE DEMOLISHED.

GAI
Gupta & Associates, Inc.
CONSULTING ENGINEERING
Registration No. F-2593
302 Dennis St.,
Houston, Texas 77006
Tel: 713-636-2936
Fax: 713-636-2987
email: hforouzan@gaiconsulting.com

ARCADIS
Infrastructure · Water · Environment · Buildings
1330 Post Oak Blvd, Suite 2250
Houston, TX 77056
Tel: 713-953-4800
Fax: 713-977-4620
www.arcadis.com
Texas Registered Engineering Firm F-533

SURVEYED BY: AMANI ENGR.
FB NO. P-6335

STATE OF TEXAS
H. A. FOROUZAN
77748
REGISTERED
PROFESSIONAL ENGINEER
11/18/2025

CITY OF HOUSTON

HOUSTON PUBLIC WORKS

LIFT STATION REHABILITATION & RECONSTRUCTION
CONSENT DECREE

BRETSHIRE NO.1 LIFT STATION
ELECTRICAL DEMOLITION
SITE PLAN

E-1

WBS NUMBER	FOR CITY OF HOUSTON USE ONLY
R-000267-0175-4	
DRAWING SCALE	
1" = 20'-0"	
CITY OF HOUSTON PM	
NP NAWARAJ PANTA, P.E.	
SHEET NO. 49 OF 312	

FILE PATH: O:\H8103_Houston Lift Station Removal And Replacement (CMAR)\6 Drawings\Electrical\Working\Bretshire No.1\Bretshire No.1_E-01.dwg
PLOT STYLE: COH.ctb PLOTTED: 11/21/2025 8:25 PM

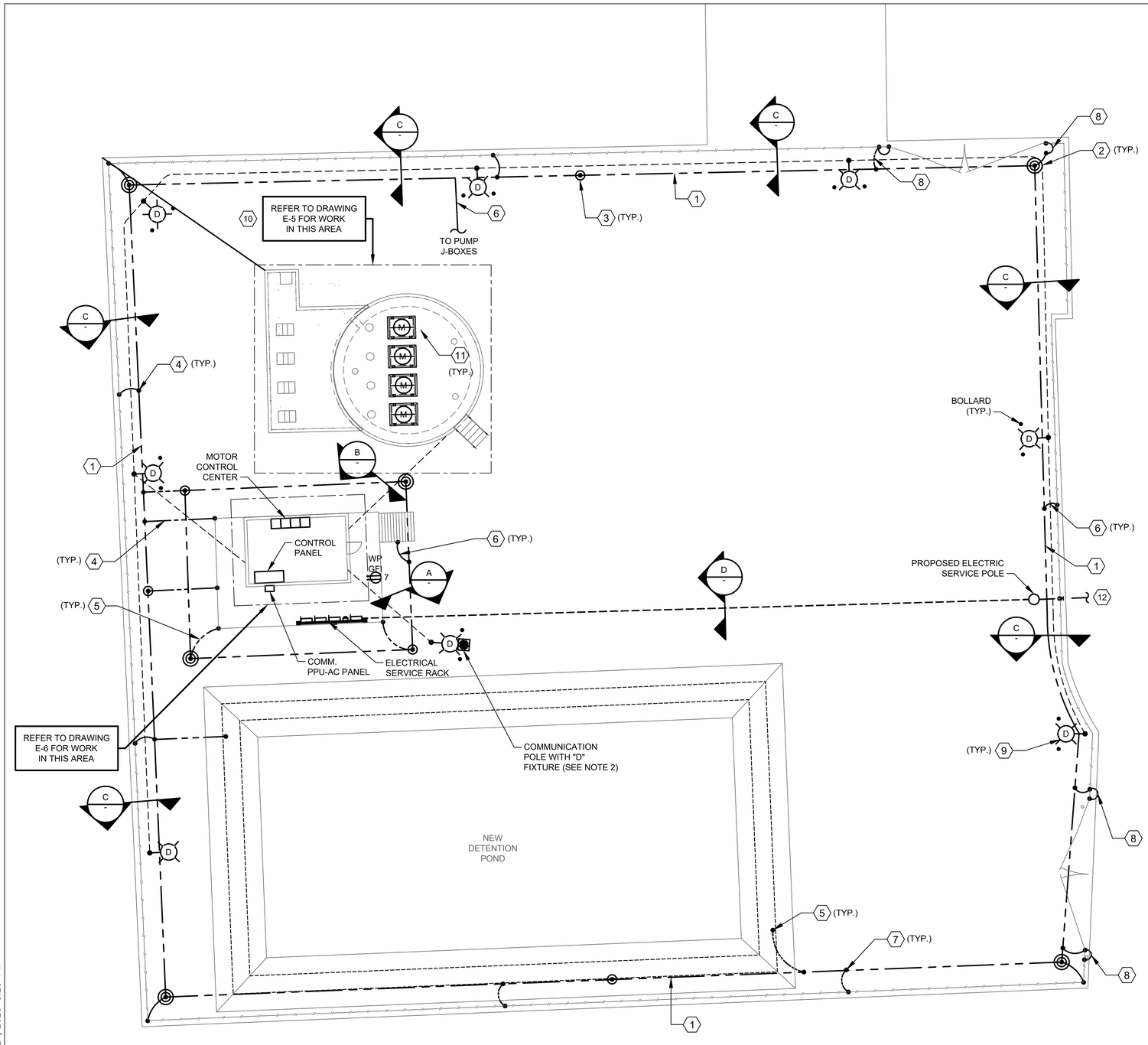

BRETSHIRE NO.1 LIFT STATION
ELECTRICAL PROPOSED SITE

PLAN

1" = 10'-0"

NOTES BY SYMBOL "#":

1. MAIN BURIED GROUND LOOP, #4/0 BARE COPPER CONDUCTOR.
2. GROUND TEST WELL.
3. GROUND ROD.
4. #4/0 BARE COPPER BONDING CONDUCTOR.
5. BOND HANDRAIL TO MAIN BURIED GROUND LOOP.
6. #2/0 BARE COPPER BONDING CONDUCTOR.
7. THERMOWELD CABLE CONNECTION.
8. PROVIDE FLEX BONDING JUMPER ACROSS GATE HINGES.
9. YARD LIGHT CONTROLLED BY LIGHTING SWITCH.
10. THE ELECTRICAL INSTALLATION IN THE WET WELL SHALL BE EXPLOSION PROOF, IN ACCORDANCE WITH THE NATIONAL ELECTRICAL CODE FOR CLASS I, DIVISION 1 LOCATIONS.
11. INSIDE WETWELL RATED NEMA CLASS 1, DIV. 1, OUTSIDE ABOVE GROUND, AROUND WETWELL RATED CLASS 1, DIV. 2 ACCORDING TO NFPA 820.
12. TO CPE TRANSFORMER POLE. CONTRACTOR TO COORDINATE THE INSTALLATION OF OVERHEAD POWER CABLES WITH CPE.

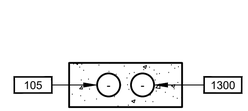

DUCTBANK

SECTION A
NTS

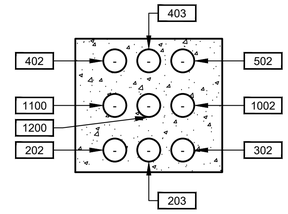

DUCTBANK

SECTION B
NTS

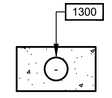

DUCTBANK

SECTION C
NTS

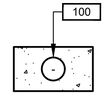

DUCTBANK

SECTION D
NTS

NO.	DATE	REVISION	APP.

GAI
Gupta & Associates, Inc.
CONSULTING ENGINEERING
Registration No. F-2593
302 Dennis St.,
Houston, Texas 77006
Tel: 713-636-2936
Fax: 713-636-2967
email: hforouzan@gaiconsulting.com

ARCADIS
Infrastructure · Water · Environment · Buildings
1330 Post Oak Blvd, Suite 2250
Houston, TX 77056
Tel: 713-953-4800
Fax: 713-977-4620
www.arcadis.com
Texas Registered Engineering Firm F-533

SURVEYED BY: AMANI ENGR.
FB NO. P-6335

STATE OF TEXAS
H. A. FOROUZAN
77748
REGISTERED PROFESSIONAL ENGINEER
11/18/2025

CITY OF HOUSTON

HOUSTON PUBLIC WORKS

LIFT STATION REHABILITATION & RECONSTRUCTION CONSENT DECREE

BRETSHIRE NO.1 LIFT STATION ELECTRICAL PROPOSED SITE PLAN

E-2

WBS NUMBER	FOR CITY OF HOUSTON USE ONLY
R-000267-0175-4	
DRAWING SCALE	
1" = 10'-0"	
CITY OF HOUSTON PM	
NP NAWARAJ PANTA, P.E.	
SHEET NO. 50 OF 312	

FILE PATH: O:\H8103_Houston Lift Station Removal And Replacement (CMAR)\6 Drawings\Electrical\Working\Bretshire No.1\Bretshire No.1_E-02.dwg
PLOT STYLE: GAI.ctb PLOTTED: 11/21/2025 8:25 PM

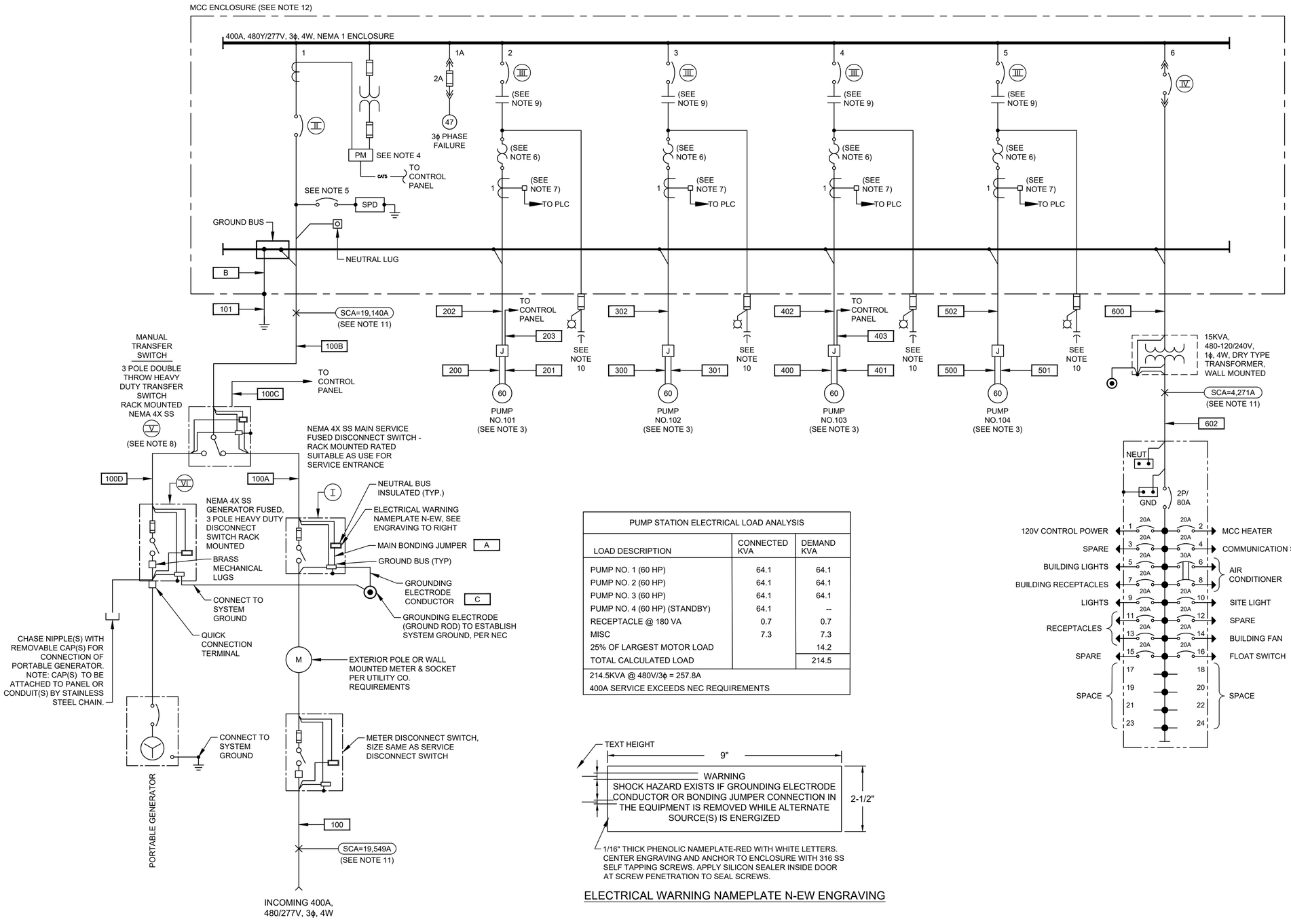

PUMP STATION ELECTRICAL LOAD ANALYSIS		
LOAD DESCRIPTION	CONNECTED KVA	DEMAND KVA
PUMP NO. 1 (60 HP)	64.1	64.1
PUMP NO. 2 (60 HP)	64.1	64.1
PUMP NO. 3 (60 HP)	64.1	64.1
PUMP NO. 4 (60 HP) (STANDBY)	64.1	--
RECEPTACLE @ 180 VA	0.7	0.7
MISC	7.3	7.3
25% OF LARGEST MOTOR LOAD		14.2
TOTAL CALCULATED LOAD		214.5
214.5KVA @ 480V/3ϕ = 257.8A		
400A SERVICE EXCEEDS NEC REQUIREMENTS		

1/16" THICK PHENOLIC NAMEPLATE-RED WITH WHITE LETTERS. CENTER ENGRAVING AND ANCHOR TO ENCLOSURE WITH 316 SS SELF TAPPING SCREWS. APPLY SILICON SEALER INSIDE DOOR AT SCREW PENETRATION TO SEAL SCREWS.

ELECTRICAL WARNING NAMEPLATE N-EW ENGRAVING

NOTES:

1. FOR DESCRIPTION AND RATINGS OF ITEMS INDICATED WITH ROMAN NUMERAL FLAGS, SEE DEVICE RATINGS SCHEDULE.
2. CONTRACTOR SHALL VERIFY ACTUAL AMPERAGES OF MOTORS AND SIZE STARTERS, MOTOR CIRCUIT PROTECTORS, ETC. ACCORDINGLY.
3. REFER TO INSTRUMENTATION DRAWINGS I-9, I-10, I-11, I-12 FOR PUMP CONTROL SCHEMATIC.
4. POWER MONITOR.
5. PROVIDE BREAKER ACCORDING TO MANUFACTURER'S REQUIREMENTS.
6. COMBINATION OF CT AND OVERLOAD RELAY AS REQUIRED. WHERE APPLICABLE.
7. PROVIDE 5A PRIMARY TO 4-20mA CURRENT TRANSDUCER.
8. PROVIDE A NORMALLY OPEN (NO) AUXILIARY CONTACT FOR BOTH ON POSITIONS.
9. STARTER NEMA SIZE 2 IS MINIMUM AND NEMA SIZE 3 OR GREATER SHALL BE VACUUM TYPE.
10. CONTRACTOR TO COORDINATE POWER FACTOR CORRECTION CAPACITOR SIZE WITH PUMP MANUFACTURER. MINIMUM 95% POWER FACTOR CORRECTION AT FULL LOAD. MOUNT CAPACITORS EXTERNAL ABOVE MCC ON THE APPROPRIATE SECTION.
11. POINT TO POINT METHOD IS USED FOR SHORT CIRCUIT CURRENT CALCULATION.
12. CONTRACTOR SHALL PROVIDE A PERMANENTLY AFFIXED LABEL (2" X 3") SHOWING THE AVAILABLE FAULT CURRENT AND CALCULATION DATE. THE LABEL SHALL BE BLUE LETTERING ON A CONTRASTING BACKGROUND.
13. THE INSULATION TYPES OF ALL ELECTRICAL CONDUCTORS USED IN THE PROJECT HAVE BEEN SPECIFIED IN ELECTRICAL SPECIFICATIONS (16120, 16121, AND 16122). THE TYPES OF CONDUITS USED IN THE PROJECT HAS BEEN SPECIFIED IN ELECTRICAL SPECIFICATIONS 16111.

GAI
Gupta & Associates, Inc.
CONSULTING ENGINEERING
Registration No. F-2593
302 Dennis St.,
Houston, Texas 77006
Tel: 713-636-2936
Fax: 713-636-2987
email: hforouzan@gaiconsulting.com

ARCADIS
Infrastructure · Water · Environment · Buildings
1330 Post Oak Blvd, Suite 2250
Houston, TX 77056
Tel: 713-953-4800
Fax: 713-977-4620
www.arcadis.com
Texas Registered Engineering Firm F-533

SURVEYED BY: AMANI ENGR.
FB NO. P-6335

STATE OF TEXAS
H. A. FOROUZAN
77748
REGISTERED PROFESSIONAL ENGINEER
11/18/2025

CITY OF HOUSTON
HOUSTON PUBLIC WORKS

LIFT STATION REHABILITATION & RECONSTRUCTION CONSENT DECREE

BRETSHIRE NO.1 LIFT STATION ELECTRICAL SINGLE-LINE DIAGRAM

E-3

WBS NUMBER	FOR CITY OF HOUSTON USE ONLY
R-000267-0175-4	
DRAWING SCALE	
NONE	
CITY OF HOUSTON PM	
NP NAWARAJ PANTA, P.E.	
SHEET NO. 51 OF 312	

NO.	DATE	REVISION	APP.

FILE PATH: O:\H8103_Houston Lift Station Removal And Replacement (CMAR)\6 Drawings\Electrical\Working\Bretshire No.1_E-03.dwg
PLOT STYLE: GAI.ctb PLOTTED: 11/21/2025 8:25 PM

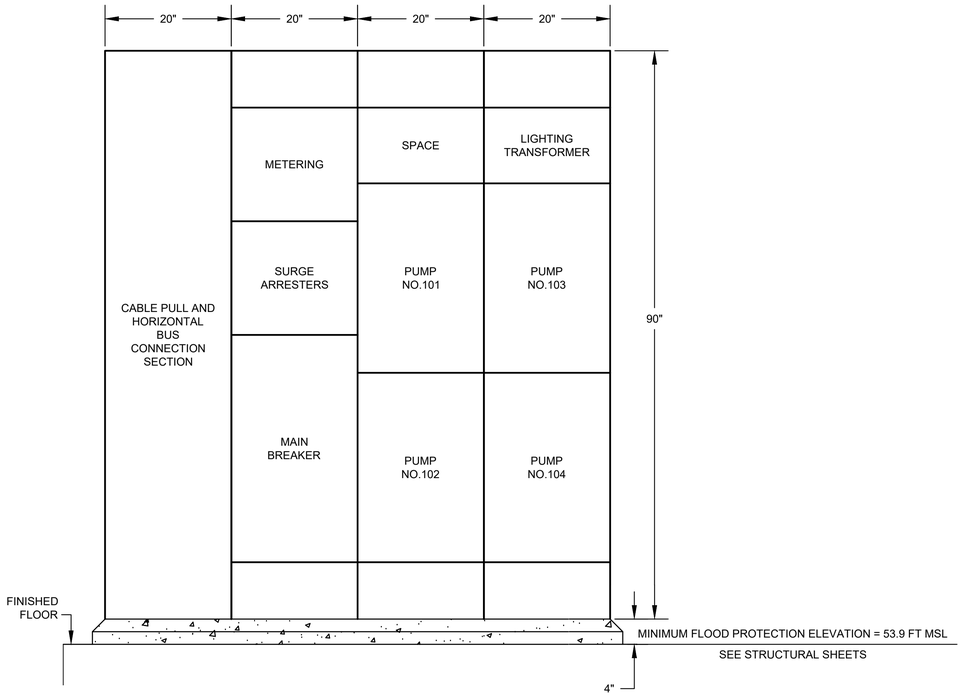

MCC ELEVATION

DETAIL 1

NTS. -

ITEM	CIRCUIT	DESCRIPTION	RATINGS FOR PUMP SIZES INDICATED
Ⅰ	--	MAIN DISCONNECT SWITCH	
		OPERATING VOLTAGE	480V
		CURRENT RATING	400A
		CURRENT LIMITING	CLASS J
		FUSES TYPE & SIZE	400A
Ⅱ	1	MAIN BREAKER	
		3 POLE - TYPE	MOLDED CASE
		MOUNTING	FIXED
		OPERATING VOLTAGE	480V
		FRAME SIZE	400A
		TRIP SETTING	400A
		INTERRUPT CAPACITY	65KA SYM
		OPTIONS	NONE
Ⅲ	2 3 4 5	PUMP MOTOR STARTERS	
		QUANTITY	4
		MOUNTING	FIXED
		SHORT CIRCUIT PROTECTION	
		3 POLE - TYPE	MCP
		OPERATING VOLTAGE	480V
		FRAME SIZE	150A
		TRIP SETTING	FIELD ADJ
		INTERRUPT CAPACITY	65KA SYM
		MOTOR STARTING CONTACTOR	
		3 POLE - TYPE	VACUUM
		OPERATING VOLTAGE	480V
		SIZE (SEE NOTE 4)	NEMA 4
		OVERLOAD PROTECTION TYPE	SOLID STATE MOR
		CT RATIO	100:5
Ⅳ	6	LIGHTING TRANSFORMER FEEDER BREAKER	
		NO. OF POLES	2
		TYPE	MOLDED CASE
		OPERATING VOLTAGE	480V
		FRAME SIZE	100A
		TRIP SETTING	40A
		INTERRUPT CAPACITY	65KA SYM
Ⅴ	--	MANUAL TRANSFER SWITCH	3P, 4W SN
		OPERATING VOLTAGE	480V
		CURRENT RATING	400A
Ⅵ	--	GENERATOR FUSED DISCONNECT SWITCH	3P, 4W SN
		OPERATING VOLTAGE	480V
		CURRENT RATING	400A
		CURRENT LIMITING	CLASS J
		FUSES TYPE & SIZE	400A

NO.	DATE	REVISION	APP.

GAI
Gupta & Associates, Inc.
CONSULTING ENGINEERING
Registration No. F-2593
302 Dennis St.,
Houston, Texas 77006
Tel: 713-636-2936
Fax: 713-636-2987
email: hforouzan@gaiconsulting.com

ARCADIS
Infrastructure · Water · Environment · Buildings
1330 Post Oak Blvd, Suite 2250
Houston, TX 77056
Tel: 713-953-4800
Fax: 713-977-4620
www.arcadis.com
Texas Registered Engineering Firm F-533

SURVEYED BY: AMANI ENGR.

FB NO. P-6335

STATE OF TEXAS
H. A. FOROUZAN
77748
REGISTERED PROFESSIONAL ENGINEER

11/18/2025

CITY OF HOUSTON

HOUSTON PUBLIC WORKS

LIFT STATION REHABILITATION & RECONSTRUCTION CONSENT DECREE

BRETSHIRE NO.1 LIFT STATION MCC ELEVATION & DEVICE RATING SCHEDULE

E-4

WBS NUMBER	FOR CITY OF HOUSTON USE ONLY
R-000267-0175-4	
DRAWING SCALE	
AS SHOWN	
CITY OF HOUSTON PM	
NP NAWARAJ PANTA, P.E.	
SHEET NO. 52 OF 312	

FILE PATH: O:\H8103_Houston Lift Station Removal And Replacement (CMAR)\5 Construction Phase\Addenda\Addendum No.1\Bretshire No.1\Bretshire No.1_E-04.dwg
PLOT STYLE: GAI.ctb PLOTTED: 1/14/2026 3:11 PM

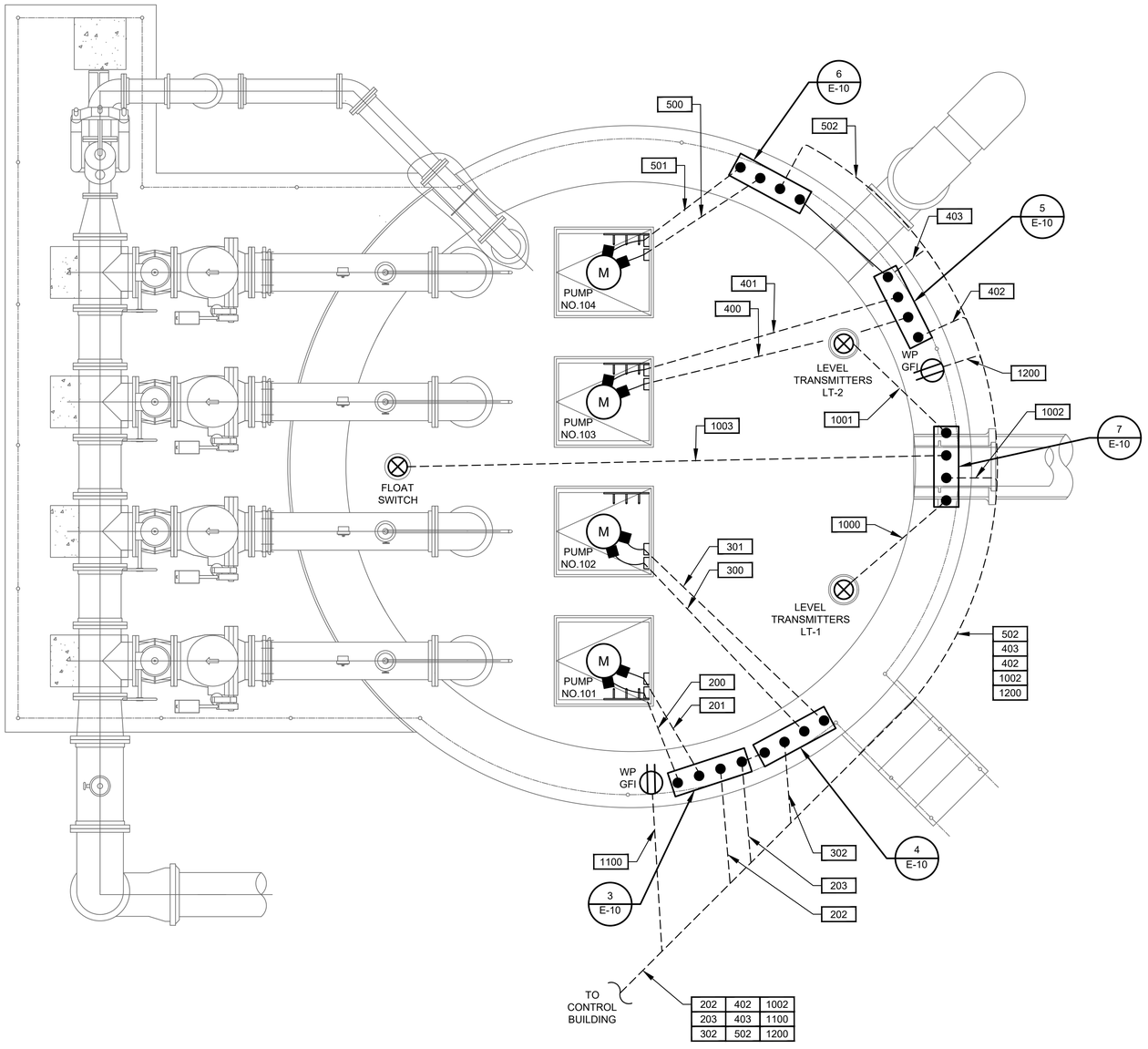

BRETHSHIRE NO.1 LIFT STATION
ENLARGED PLAN

PLAN

3/8"=1'-0"

N

1 0 2 4

SCALE: 3/8" = 1'-0"

NO.	DATE	REVISION	APP.

GAI
Gupta & Associates, Inc.
CONSULTING ENGINEERING
Registration No. F-2593
302 Dennis St.,
Houston, Texas 77006
Tel: 713-636-2936
Fax: 713-636-2987
email: hforouzan@gaiconsulting.com

ARCADIS
Infrastructure · Water · Environment · Buildings
1330 Post Oak Blvd, Suite 2250
Houston, TX 77056
Tel: 713-953-4800
Fax: 713-977-4620
www.arcadis.com
Texas Registered Engineering Firm F-533

SURVEYED BY: AMANI ENGR.

FB NO. P-6335

STATE OF TEXAS
H. A. FOROUZAN
77748
REGISTERED PROFESSIONAL ENGINEER

11/18/2025

CITY OF HOUSTON

HOUSTON PUBLIC WORKS

LIFT STATION REHABILITATION & RECONSTRUCTION
CONSENT DECREE

BRETSHIRE NO.1 LIFT STATION ELECTRICAL ENLARGED PLAN

E-5

WBS NUMBER	FOR CITY OF HOUSTON USE ONLY
R-000267-0175-4	
DRAWING SCALE	
3/8" = 1'-0"	
CITY OF HOUSTON PM	
NP NAWARAJ PANTA, P.E.	
SHEET NO. 53 OF 312	

FILE PATH: O:\H8103_Houston Lift Station Removal And Replacement (CMAR)\6 Drawings\Electrical\Working\Bretshire No.1\Bretshire No.1_E-05.dwg
PLOT STYLE: GAI.ctb PLOTTED: 11/21/2025 8:26 PM

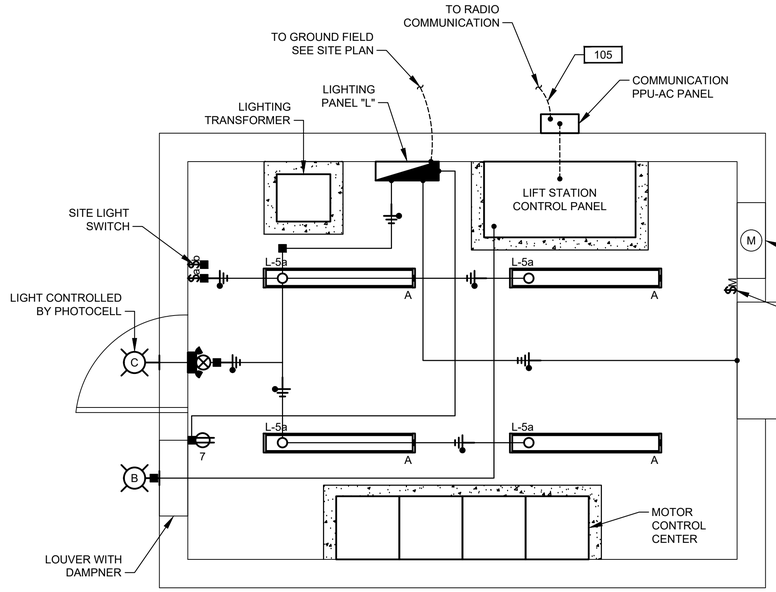

LIGHTING & COMMUNICATION SYSTEM PLAN

1/2"=1'-0"

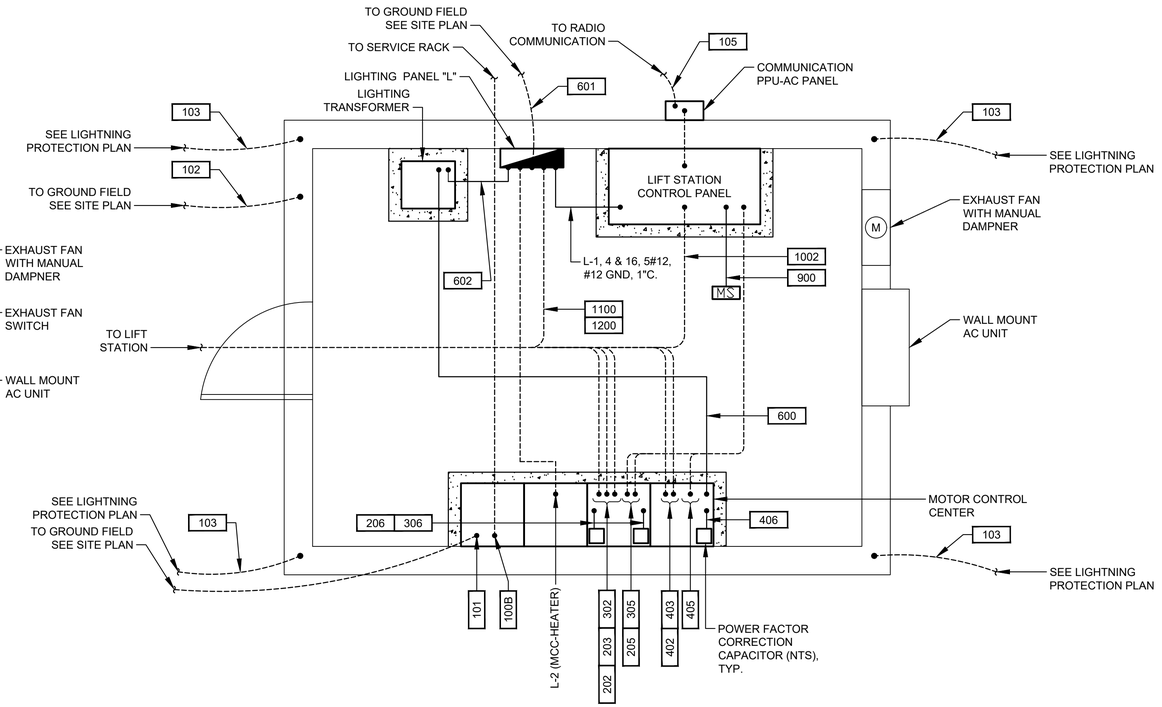

POWER PLAN

1/2"=1'-0"

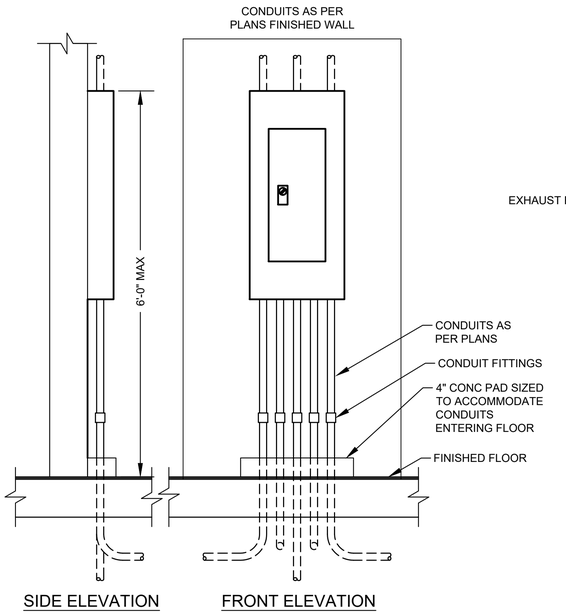

SIDE ELEVATION FRONT ELEVATION

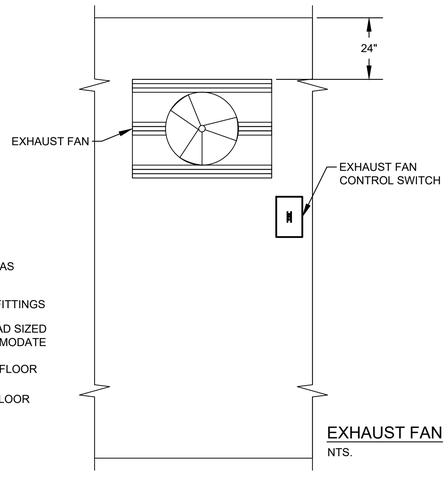

EXHAUST FAN

NTS.

TYPICAL PANEL INSTALLATION

DETAIL 1 / -

NTS.

N

NO.	DATE	REVISION	APP.

GAI
Gupta & Associates, Inc.
CONSULTING ENGINEERING
Registration No. F-2593
302 Dennis St.,
Houston, Texas 77006
Tel: 713-636-2936
Fax: 713-636-2987
email: hforouzan@gaiconsulting.com

ARCADIS
Infrastructure · Water · Environment · Buildings
1330 Post Oak Blvd, Suite 2250
Houston, TX 77056
Tel: 713-953-4800
Fax: 713-977-4620
www.arcadis.com
Texas Registered Engineering Firm F-533

SURVEYED BY: AMANI ENGR.
FB NO. P-6335

STATE OF TEXAS
H. A. FOROUZAN
77748
REGISTERED PROFESSIONAL ENGINEER
11/18/2025

CITY OF HOUSTON

HOUSTON PUBLIC WORKS

LIFT STATION REHABILITATION & RECONSTRUCTION CONSENT DECREE

BRETSHIRE NO.1 LIFT STATION ELECTRICAL BUILDING PLAN

E-6

WBS NUMBER	FOR CITY OF HOUSTON USE ONLY
R-000267-0175-4	
DRAWING SCALE	
AS SHOWN	
CITY OF HOUSTON PM	
NP NAWARAJ PANTA, P.E.	
SHEET NO. 54 OF 312	

FILE PATH: O:\H8103_Houston Lift Station Removal And Replacement (CMAR)\6 Drawings\Electrical\Working\Bretshire No.1\Bretshire No.1_E-06.dwg
PLOT STYLE: GAI.ctb PLOTTED: 11/21/2025 8:27 PM

	DESCRIPTION	SERVICE		ROUTING			CONDUIT & WIRE SIZE
		VOLTAGE	AMPS OR HP	FROM	TO	VIA	
A	MAIN BONDING JUMPER	--	--	MAIN FUSED DISCONNECT NEUTRAL	MAIN FUSED DISCONNECT GROUND	--	#2/0 GND.
B	EQUIPMENT BONDING JUMPER	--	--	MCC/POWER PANEL ENCLOSURE	POWER/CONTROL PANEL & EQUIPMENT	--	#2/0 GND.
C	GROUNDED ELECTRODE CONDUCTOR	--	--	GROUNDING ELECTRODE	MAIN SERVICE FUSED DISCONNECT GROUNDING	--	#2/0 GND.
100	SERVICE ENTRANCE	480V	400A	ELECTRIC SERVICE POLE	METER DISCONNECT SWITCH		3#500 MCM., #1/0 NEUT. #1/0 GND., 4" C.
100A	MCC SERVICE POWER	480V	400A	SERVICE DISCONNECT	MANUAL TRANSFER SWITCH	--	3#500 MCM., #1/0 NEUT. #1/0 GND., 4" C.
100B	MCC SERVICE POWER	480V	400A	MANUAL TRANSFER SWITCH	MAIN BREAKER IN MCC	--	3#500 MCM., #1/0 NEUT. #1/0 GND., 4" C.
100C	NORMAL/EMERGENCY POWER STATUS	24VDC	--	MANUAL TRANSFER SWITCH	CONTROL PANEL	CAPPED CONDUITS	4 #14 AWG., #14 GND., 1"C.
100D	EMERGENCY POWER	480V	400A	GENERATOR DISCONNECT	MANUAL TRANSFER SWITCH	--	3#500 MCM., #1/0 NEUT. #1/0 GND., 4" C.
101	GROUND ELECTRODE CONDUCTOR	--	--	MCC ENCLOSURE	GROUND FIELD	--	#2/0 GND.
102	GROUND ELECTRODE CONDUCTOR	--	--	BUILDING STEEL	GROUND FIELD	--	#2/0 GND.
103	BUILDING GROUNDING	--	--	BUILDING REBAR	GROUND FIELD	--	#2/0 GND.
104	GROUND ELECTRODE CONDUCTOR	--	--	CONTROL PANEL	GROUND FIELD	--	#2/0 GND.
105	COMMUNICATION	--	--	COMMUNICATION POLE	CONTROL PANEL	--	1-1/2"C. CAT-5E
200	PUMP NO. 101 POWER	480V	60 HP	PUMP NO. 101	PUMP NO. 101 JUNCTION BOX	--	MANUFACTURER CABLE IN 3"C.
201	PUMP NO. 101 CONTROLS	120V	--	PUMP NO. 101	PUMP NO. 101 JUNCTION BOX	--	MANUFACTURER CABLE IN 3"C.
202	PUMP NO. 101 POWER	480V	60 HP	PUMP NO. 101 JUNCTION BOX	PUMP STARTER	--	3#1, #6 GND., 2" C.
203	COMBINED PUMP CONTROLS	120V	--	PUMP NO. 101 JUNCTION BOX	PUMP STARTER	--	COMBINE 200 & 300 WIRING, 10#14 1"C.
205	PUMP NO. 101 CONTROLS	120V	--	STARTER IN MOTOR CONTROL CENTER	CONTROL PANEL	--	12#14 3/4"C.
206	PUMP NO. 101 CAPACITOR	480V	TBD	PUMP NO. 101 MOTOR STARTER	POWER FACTOR CORRECTION CAPACITOR	--	3#10 AWG., #10 GND., 3/4"C.
300	PUMP NO. 102 POWER	480V	60 HP	PUMP NO. 102	PUMP NO. 102 JUNCTION BOX	--	MANUFACTURER CABLE IN 3"C.
301	PUMP NO. 102 CONTROLS	120V	--	PUMP NO. 102	PUMP NO. 102 JUNCTION BOX	--	MANUFACTURER CABLE IN 3"C.
302	PUMP NO. 102 POWER	480V	60 HP	PUMP NO. 102 JUNCTION BOX	PUMP STARTER	--	3#1, #6 GND., 2" C.
305	PUMP NO. 102 CONTROLS	120V	--	STARTER IN MOTOR CONTROL CENTER	CONTROL PANEL	--	12#14, 3/4"C.
306	PUMP NO. 102 CAPACITOR	480V	TBD	PUMP NO. 102 MOTOR STARTER	POWER FACTOR CORRECTION CAPACITOR	--	3#10 AWG., #10 GND., 3/4"C.
400	PUMP NO. 103 POWER	480V	60 HP	PUMP NO. 103	PUMP NO. 103 JUNCTION BOX	--	MANUFACTURER CABLE IN 3"C.
401	PUMP NO. 103 CONTROLS	120V	--	PUMP NO. 103	PUMP NO. 103 JUNCTION BOX	--	MANUFACTURER CABLE IN 3"C.
402	PUMP NO. 103 POWER	480V	60 HP	PUMP NO. 103 JUNCTION BOX	PUMP STARTER	--	3#1, #6 GND., 2" C.
403	COMBINED PUMP CONTROLS	120V	--	PUMP NO. 103 JUNCTION BOX	CONTROL PANEL	--	COMBINE 400 & 500 WIRING, 10#14 1"C.
405	PUMP NO. 3 CONTROLS	120V	--	STARTER IN MOTOR CONTROL CENTER	CONTROL PANEL	--	12#14, 3/4"C.
406	PUMP NO. 3 CAPACITOR	480V	TBD	PUMP NO. 3 MOTOR STARTER	POWER FACTOR CORRECTION CAPACITOR	--	3#10 AWG., #10 GND., 3/4"C.
500	PUMP NO. 104 POWER	480V	60 HP	PUMP NO. 104	PUMP NO. 104 JUNCTION BOX	--	MANUFACTURER CABLE IN 3"C.
501	PUMP NO. 104 CONTROLS	120V	--	PUMP NO. 104	PUMP NO. 104 JUNCTION BOX	--	MANUFACTURER CABLE IN 3"C.
502	PUMP NO. 104 POWER	480V	--	PUMP NO. 104 JUNCTION BOX	PUMP STARTER	--	3#1, #6 GND., 2" C.
505	PUMP NO. 104 CONTROLS	120V	--	STARTER IN MOTOR CONTROL CENTER	CONTROL PANEL	--	12#14 3/4"C.
506	PUMP NO. 104 CAPACITOR	480V	TBD	PUMP NO. 104 MOTOR STARTER	POWER FACTOR CORRECTION CAPACITOR	--	3#10 AWG., #10 GND., 3/4"C.
600	LIGHTING PANEL FEEDER	480V	--	MOTOR CONTROL CENTER	LIGHTING TRANSFORMER	--	2#8, #8 GND., 1"C.
601	LIGHTING PANEL GROUND	--	--	LIGHTING PANEL	GROUND FIELD	--	#8 GND., 1"C.
602	LIGHTING PANEL FEEDER	120/240V	--	LIGHTING TRANSFORMER	LIGHTING PANEL	--	3#4, #8 GND., 1-1/4"C.
900	INTRUSION ALARM	24VDC	--	MOTION SWITCH	CONTROL PANEL	--	2 #14, 3/4"C.
1000	LEVEL TRANSMITTER	24VDC	--	TRANSMITTER	TRANSMITTER JUNCTION BOX	--	MANUFACTURER CABLE IN 2-1/2"C.
1001	LEVEL TRANSMITTER	24VDC	--	TRANSMITTER	TRANSMITTER JUNCTION BOX	--	MANUFACTURER CABLE IN 2-1/2"C.
1002	COMBINED LEVEL TRANSMITTERS & FLOAT SWITCH	24VDC	--	CONTROL PANEL	TRANSMITTER JUNCTION BOX	--	2 TRI, 4 #14, 2"C.
1003	WELL FLOAT SWITCHES	24VDC	--	TRANSMITTER JUNCTION BOX	FLOAT SWITCH NO.1 & NO.2	--	MANUFACTURER CABLE IN 2-1/2"C.
1100	120VAC FOR RECEPTACLE	--	--	LIGHTING PANEL	RECEPTACLE NEXT TO TRANSMITTER J-BOX	--	2#12, #12G, 1"C.
1200	120VAC FOR RECEPTACLE	--	--	LIGHTING PANEL	RECEPTACLE NEXT TO PUMP NO. 2 J-BOX	--	2#12, #12G, 1"C.
1300	SITE LIGHTING	120V	--	LIGHTING PANEL	SITE LIGHTS	VIA SITE LIGHTING SWITCH	2#12, #12G, 1"C.

NOTES:

1. CONDUITS LABELED "FUTURE SPACE" ARE TO BE INSTALLED AND CAPPED IN FIELD.
2. ANY CONDUIT REQUIRING A CSBE SEAL, SHALL BE A MINIMUM SIZE OF 2 1/2".
3. ALL UNDERGROUND CONDUITS (SINGLE AND MULTI-RUN) TO BE ENCASED IN REINFORCED CONCRETE DUCTBANK.

GAI
Gupta & Associates, Inc.
CONSULTING ENGINEERING
Registration No. F-2593
302 Dennis St.,
Houston, Texas 77006
Tel: 713-636-2936
Fax: 713-636-2967
email: hforouzan@gaiconsulting.com

ARCADIS
Infrastructure · Water · Environment · Buildings
1330 Post Oak Blvd, Suite 2250
Houston, TX 77056
Tel: 713-953-4800
Fax: 713-977-4620
www.arcadis.com
Texas Registered Engineering Firm F-533

SURVEYED BY: AMANI ENGR.
FB NO. P-6335

STATE OF TEXAS
H. A. FOROUZAN
77748
REGISTERED PROFESSIONAL ENGINEER
11/18/2025

CITY OF HOUSTON
HOUSTON PUBLIC WORKS

LIFT STATION REHABILITATION & RECONSTRUCTION CONSENT DECREE

BRETSHIRE NO.1 LIFT STATION ELECTRICAL CONDUIT SCHEDULE

E-7

WBS NUMBER	FOR CITY OF HOUSTON USE ONLY
R-000267-0175-4	
DRAWING SCALE	
NONE	
CITY OF HOUSTON PM	
NP NAWARAJ PANTA, P.E.	
SHEET NO. 55 OF 312	

NO.	DATE	REVISION	APP.

FILE PATH: O:\H8103_Houston Lift Station Removal And Replacement (CMAR)\5 Construction Phase\Addenda\Addendum No.1\Bretshire No.1\Bretshire No.1_E-07.dwg
PLOT STYLE: GAI.ctb PLOTTED: 1/14/2026 3:11 PM

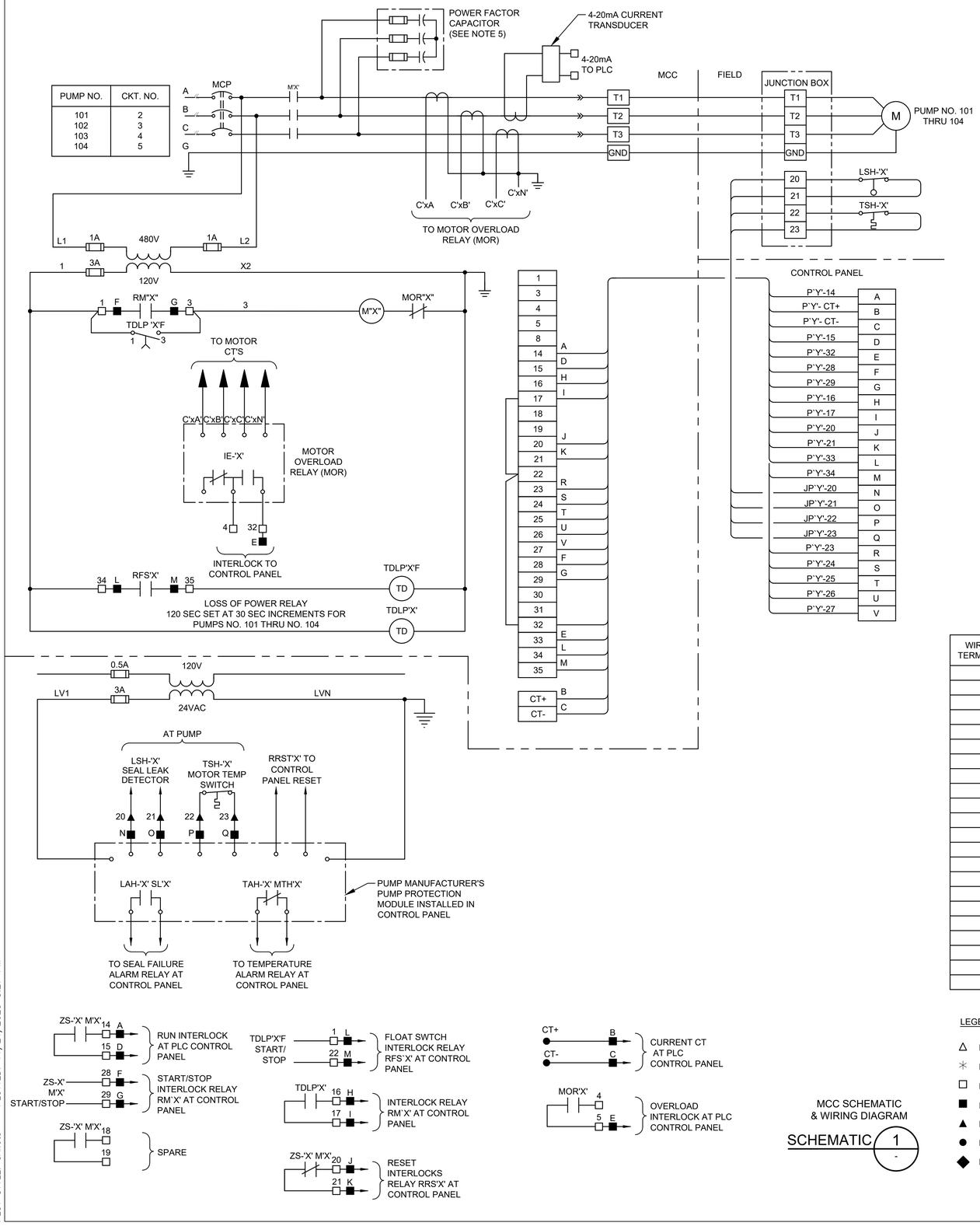

PUMP NO.	CKT. NO.
101	2
102	3
103	4
104	5

WIRE TAG OR TERMINAL LABEL	PUMP NO. 101	PUMP NO. 102	PUMP NO. 103	PUMP NO. 104	FUNCTION
A	3P1	3P2	3P3	3P4	24VDC CONTROL
B	124	224	324	424	4-20mA CURRENT TRANSDUCER
C	125	225	325	425	4-20mA CURRENT TRANSDUCER
D	116	216	316	416	M CONTACT
E	117	217	317	417	OVERLOAD ALARM
F	114	214	314	414	RUN INTERLOCK
G	115	215	315	415	RUN INTERLOCK
H	102	202	302	402	LOSS OF POWER TIMER
I	103	203	303	403	LOSS OF POWER TIMER
J	118	218	318	418	ALARM RESET INTERLOCK
K	119	219	319	419	ALARM RESET INTERLOCK
L	126	226	326	426	FLOAT SWITCH RUN INTERLOCK
M	127	227	327	427	FLOAT SWITCH RUN INTERLOCK
N	120	220	320	420	SEAL LEAK DETECTOR
O	121	221	321	421	SEAL LEAK DETECTOR
P	122	222	322	422	MOTOR TEMPERATURE SWITCH
Q	123	223	323	423	MOTOR TEMPERATURE SWITCH
R	109	209	309	409	VFD MODE
S	110	210	310	410	4-20mA VFD SPEED CONTROL
T	111	211	311	411	4-20mA VFD SPEED CONTROL
U	112	212	312	412	4-20mA VFD SPEED INDICATION
V	113	213	313	413	4-20mA VFD SPEED INDICATION

LEGEND

- △ DEVICE OR FIELD TERMINAL LOCATED AT MOTOR
- ✳ DEVICE OR FIELD TERMINAL LOCATED REMOTE
- □ DEVICE OR FIELD TERMINAL LOCATED AT POWER PANEL
- ■ FIELD TERMINAL LOCATED AT CONTROL PANEL
- ▲ REMOTE TERMINAL
- ● DEVICE TERMINAL NO.
- ◆ PC INTERFACE TERMINAL

MCC SCHEMATIC & WIRING DIAGRAM

SCHEMATIC 1 / -

NOTES:

1. THE 'X' NOTATION IN SCHEMATIC DESIGNATIONS REPRESENTS APPLICABLE PUMP NO. 101, 102, 103, 104.
2. THE "Y" NOTATION INDICATES MCC CIRCUIT NUMBER.
3. UNLESS OTHERWISE INDICATED, ALL DEVICES WITHOUT FURTHER DESIGNATION ARE LOCATED AT THE MOTOR CONTROL CENTER (MCC).
4. MOTOR OVERLOAD RELAY OUTPUT CONTACT SHOWN IS NORMALLY CLOSED WHEN RELAY IS DE-ENERGIZED. OPEN WHEN ENERGIZED, AND CLOSED WHEN IN ALARM. (VERIFY OPERATION OF RELAY PROVIDED AND ADJUST CONNECTION OF RMOR AUXILIARY RELAYS.)
5. CONTRACTOR TO COORDINATE POWER FACTOR CORRECTION CAPACITOR SIZE WITH PUMP MANUFACTURER.

NO.	DATE	REVISION	APP.

GAI
Gupta & Associates, Inc.
CONSULTING ENGINEERING
Registration No. F-2593
302 Dennis St.,
Houston, Texas 77006
Tel: 713-636-2936
Fax: 713-636-2967
email: hforouzan@gaiconsulting.com

ARCADIS
Infrastructure · Water · Environment · Buildings
1330 Post Oak Blvd, Suite 2250
Houston, TX 77056
Tel: 713-953-4800
Fax: 713-977-4620
www.arcadis.com
Texas Registered Engineering Firm F-533

SURVEYED BY: AMANI ENGR.
FB NO. P-6335

STATE OF TEXAS · H. A. FOROUZAN · 77748 · REGISTERED PROFESSIONAL ENGINEER
11/18/2025

CITY OF HOUSTON
HOUSTON PUBLIC WORKS

LIFT STATION REHABILITATION & RECONSTRUCTION CONSENT DECREE

BRETSHIRE NO.1 LIFT STATION MCC SCHEMATIC & WIRING DIAGRAM

E-8

WBS NUMBER	FOR CITY OF HOUSTON USE ONLY
R-000267-0175-4	
DRAWING SCALE	
NONE	
CITY OF HOUSTON PM	
NP NAWARAJ PANTA, P.E.	
SHEET NO. 56 OF 312	

FILE PATH: O:\H8103_Houston Lift Station Removal And Replacement (CMAR)\6 Drawings\Electrical\Working\Bretshire No.1\Bretshire No.1_E-08.dwg
PLOT STYLE: GAI.ctb PLOTTED: 11/21/2025 8:27 PM

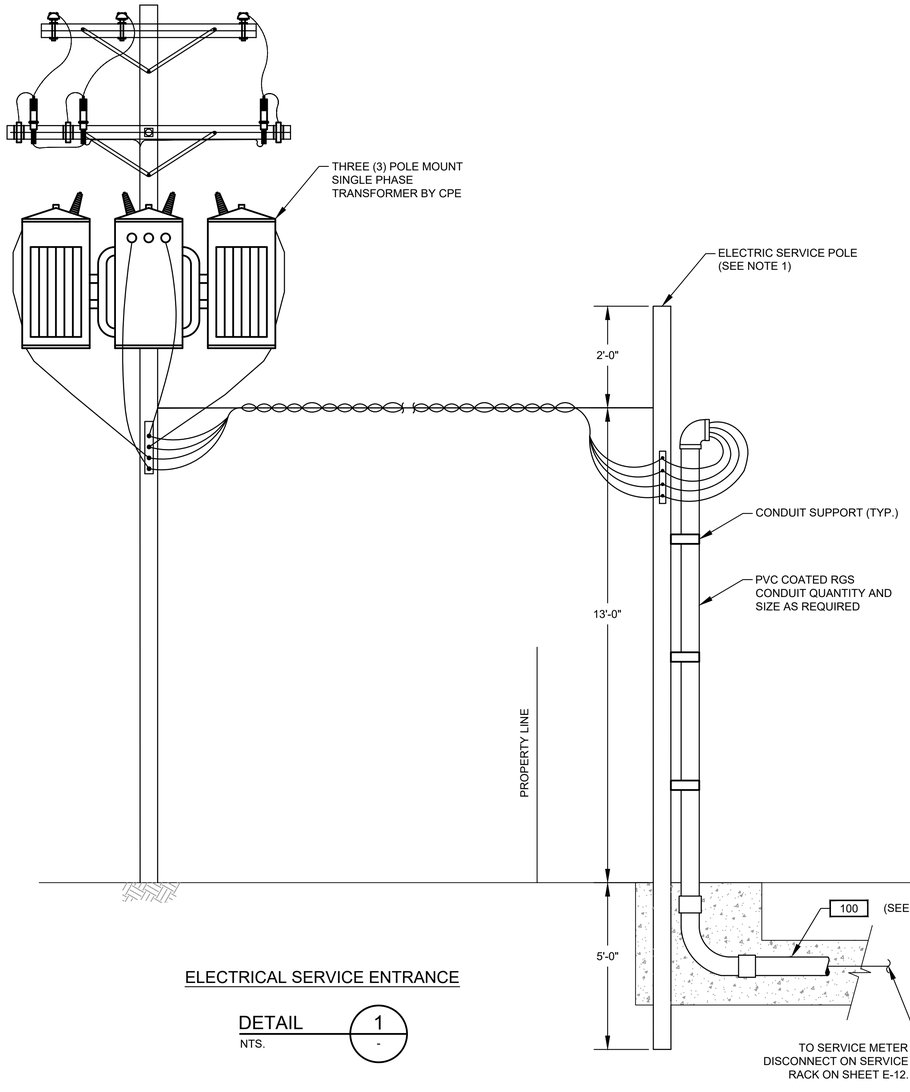

ELECTRICAL SERVICE ENTRANCE

DETAIL 1 / NTS. -

NOTES:

1. CONCRETE POLE 20' LONG. TOP DIAMETER 6", BOTTOM DIAMETER 8" PROVIDED AND INSTALLED BY ELECTRICAL CONTRACTOR.
2. ELECTRICAL SERVICE FEEDER PROVIDED AND INSTALLED BY ELECTRICAL CONTRACTOR. COORDINATE WITH CPE FOR THE REQUIREMENTS OF THE INSTALLATION.

NO.	DATE	REVISION	APP.

GAI
Gupta & Associates, Inc.
CONSULTING ENGINEERING
Registration No. F-2593
302 Dennis St.,
Houston, Texas 77006
Tel: 713-636-2936
Fax: 713-636-2967
email: hforouzan@gaiconsulting.com

ARCADIS
Infrastructure · Water · Environment · Buildings
1330 Post Oak Blvd, Suite 2250
Houston, TX 77056
Tel: 713-953-4800
Fax: 713-977-4620
www.arcadis.com
Texas Registered Engineering Firm F-533

SURVEYED BY: AMANI ENGR.
FB NO. P-6335

STATE OF TEXAS · H. A. FOROUZAN · 77748 · REGISTERED PROFESSIONAL ENGINEER
11/18/2025

CITY OF HOUSTON
HOUSTON PUBLIC WORKS

LIFT STATION REHABILITATION & RECONSTRUCTION
CONSENT DECREE

BRETSHIRE NO.1 LIFT STATION ELECTRICAL SERVICE POLE DETAIL

E-9

WBS NUMBER	FOR CITY OF HOUSTON USE ONLY
R-000267-0175-4	
DRAWING SCALE	
AS SHOWN	
CITY OF HOUSTON PM	
NP NAWARAJ PANTA, P.E.	
SHEET NO. 57 OF 312	

FILE PATH: O:\H8103_Houston Lift Station Removal And Replacement (CMAR)\6 Drawings\Electrical\Working\Bretshire No.1\Bretshire No.1_E-09.dwg
PLOT STYLE: GAI.ctb PLOTTED: 11/21/2025 8:28 PM

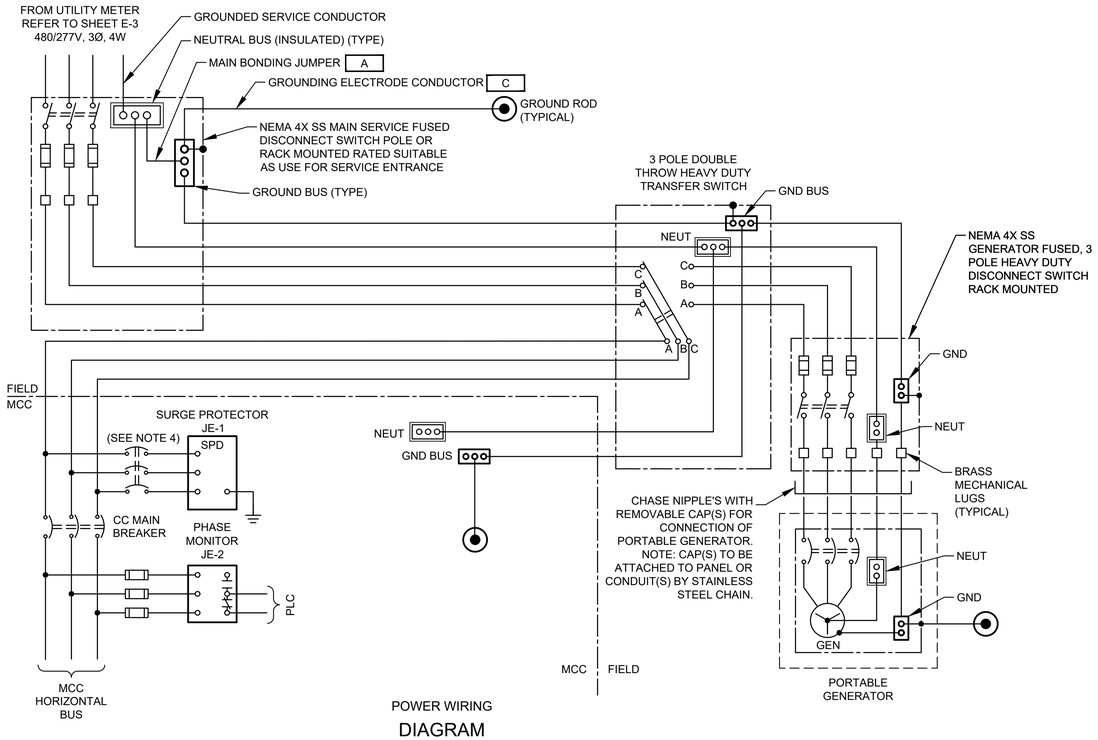

POWER WIRING
DIAGRAM
NTS
(SEE NOTE 3)

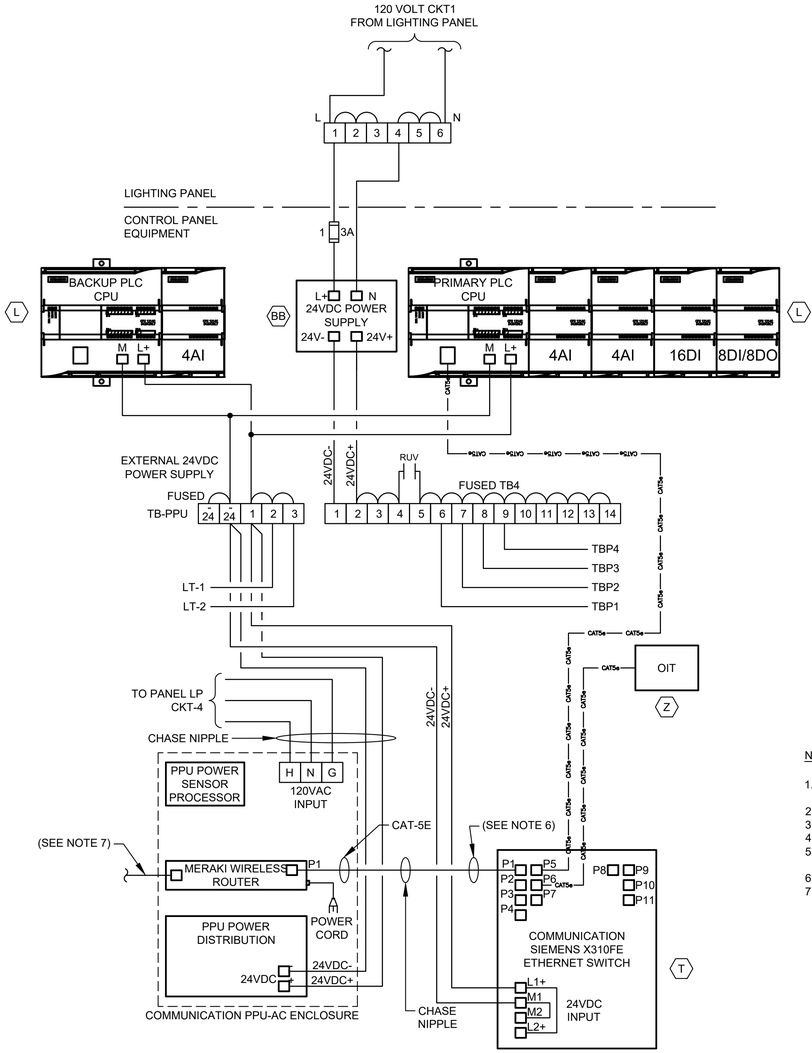

CONTROL POWER &
COMMUNICATIONS WIRING
DIAGRAM
NTS
(SEE NOTE 5)

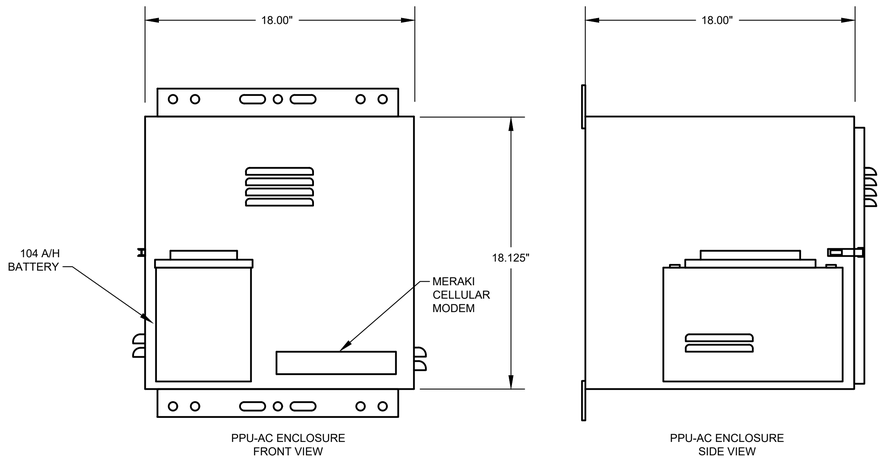

PPU-AC
CONTROL ENCLOSURE
ELEVATION
NTS

NOTES:

1. UNLESS OTHERWISE INDICATED, ALL DEVICES WITHOUT FURTHER DESIGNATION ARE LOCATED AT THE MOTOR CONTROL CENTER (MCC).
2. REFER TO SPEC SECTION 16120 FOR CONDUCTOR COLOR CODE.
3. REFER TO E-3.
4. PROVIDE BREAKER SIZE ACCORDING TO MANUFACTURER'S REQUIREMENTS.
5. COMMUNICATION PPU-AC & SCADA SHALL BE PROVIDED BY CONTRACTOR INCLUDING TO RUN CONDUITS & WIRES.
6. ETHERNET CABLE FOR MERAKI CELLULAR ROUTER (P1).
7. POE CABLE TO RADIO.

NO.	DATE	REVISION	APP.

GAI
Gupta & Associates, Inc.
CONSULTING ENGINEERING
Registration No. F-2593
302 Dennis St., Houston, Texas 77006
Tel: 713-636-2936
Fax: 713-636-2987
email: hforouzan@gaiconsulting.com

ARCADIS
Infrastructure · Water · Environment · Buildings
1330 Post Oak Blvd, Suite 2250
Houston, TX 77056
Tel: 713-953-4800
Fax: 713-977-4620
www.arcadis.com
Texas Registered Engineering Firm F-533

SURVEYED BY: AMANI ENGR.
FB NO. P-6335

STATE OF TEXAS
H. A. FOROUZAN
77748
REGISTERED
PROFESSIONAL ENGINEER
11/18/2025

CITY OF HOUSTON
HOUSTON PUBLIC WORKS

LIFT STATION REHABILITATION & RECONSTRUCTION
CONSENT DECREE

BRETSHIRE NO.1 LIFT STATION
MCC INCOMING POWER SCHEMATIC & COMM. DIAGRAM
E-10

WBS NUMBER	FOR CITY OF HOUSTON USE ONLY
R-000267-0175-4	
DRAWING SCALE	
AS SHOWN	
CITY OF HOUSTON PM	
NP NAWARAJ PANTA, P.E.	
SHEET NO. 58 OF 312	

FILE PATH: O:\H8103_Houston Lift Station Removal And Replacement (CMAR)\6 Drawings\Electrical\Working\Bretshire No.1\Bretshire No.1_E-10.dwg
PLOT STYLE: GAI.ctb PLOTTED: 11/21/2025 8:28 PM

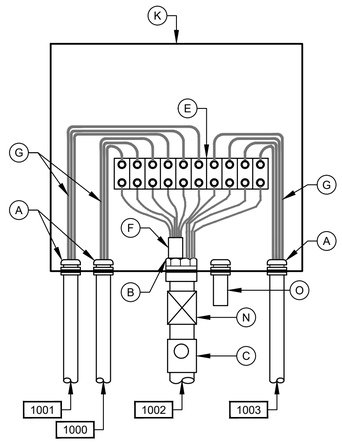

LEVEL TRANSMITTER
JUNCTION BOX

DETAIL 7 (-)
NTS
(SEE NOTE 7)

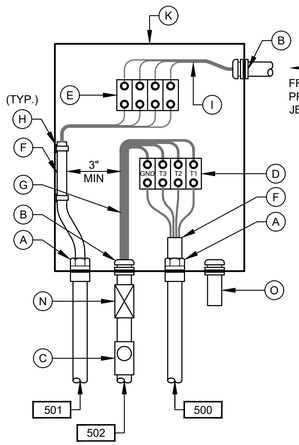

PUMP NO.4
JUNCTION BOX

DETAIL 6 (-)
NTS
(SEE NOTE 7)

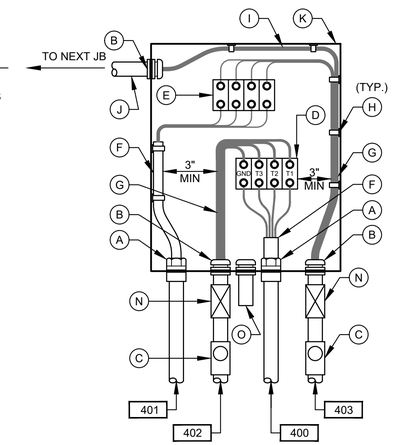

PUMP NO.3
JUNCTION BOX

DETAIL 5 (-)
NTS
(SEE NOTE 7)

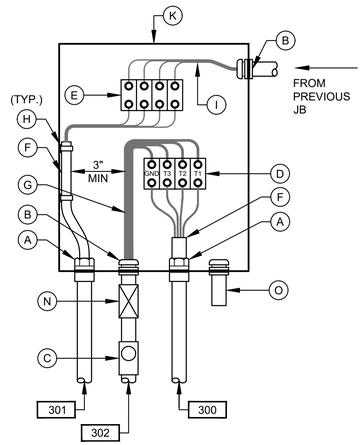

PUMP NO.2
JUNCTION BOX

DETAIL 4 (-)
NTS
(SEE NOTE 7)

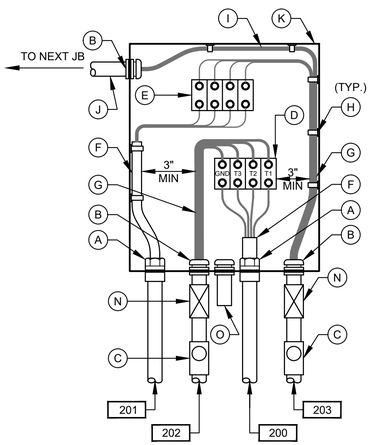

PUMP NO.1
JUNCTION BOX

DETAIL 3 (-)
NTS
(SEE NOTE 7)

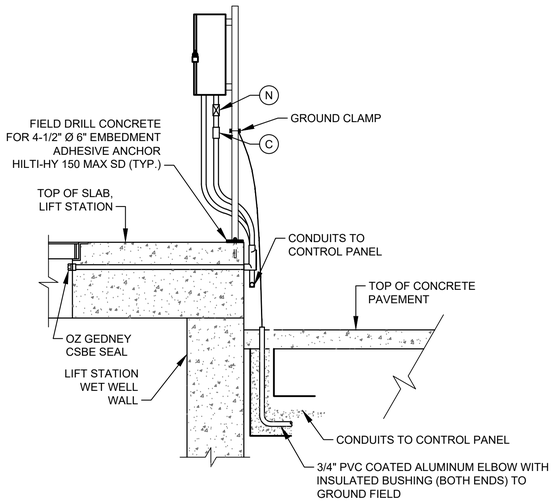

TYP SIDE VIEW FOR DETAIL 2A
NTS (SEE NOTE 10)

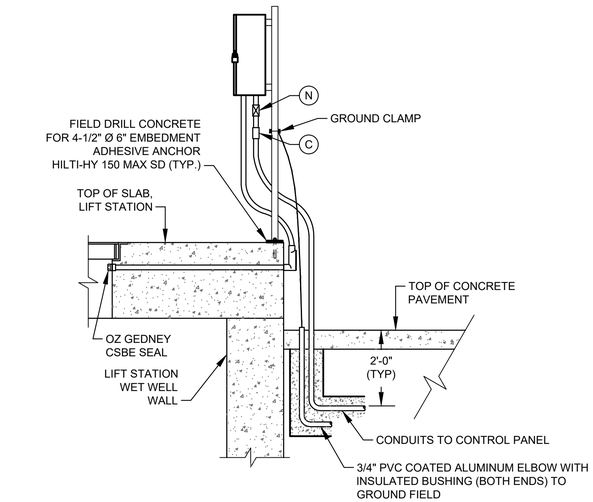

TYP SIDE VIEW FOR DETAIL 1 & 2
NTS (SEE NOTE 10)

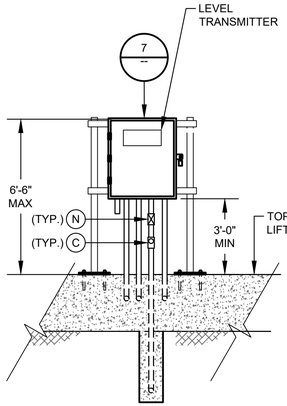

DETAIL 2 (--)
NTS

JUNCTION BOX EQUIPMENT SCHEDULE

- A - OZ GEDNEY CSBE SEAL
- B - WATERTIGHT CONDUIT HUB WITH INSULATED BUSHING
- C - CLASS I, DIV 1, EXPLOSION PROOF SEAL INSTALLED PER NEC DIV 501
- D - POWER TERMINAL BLOCK W/SCREW DOWN BOX LUGS
- E - CONTROL TERM BLOCK W/SCREW DOWN BOX LUGS
- F - MULTI-CONDUCTOR CABLE, REMOVE OUTER JACKET AS SHOWN
- G - WIRING AS SCHEDULED
- H - WIRING HARNESS PERMANENTLY AFFIXED
- I - PUMP CONTROL WIRING FROM PUMPS 2; 2 & 3; 4; OR D2, AS APPLICABLE
- J - 1 1/2" PVC COATED CONDUIT NIPPLE
- K - NEMA 6P STAINLESS STEEL JUNCTION BOX WITH GASKETED FRONT COVER, SINGLE QUARTER TURN, OIL-TIGHT LATCH AND PADLOCKING PROVISIONS, HOFFMAN D-3L16H1206 SS LF OR EQUAL. MINIMUM SIZE: 12"W X 16"H X 6"D
- L - NAMEPLATE, SEE SPECIFICATIONES (SEE NAMEPLATE SCHEDULE)
- M - MOTOR RATED SWITCH
- N - EXPANSION FITTING
- O - DRAIN VENT

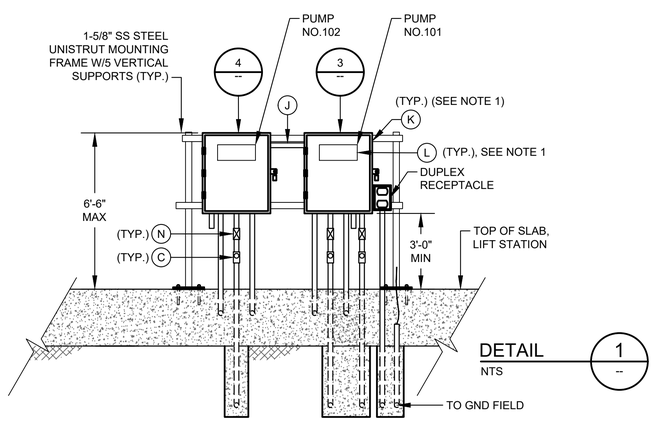

DETAIL 1 (--)
NTS

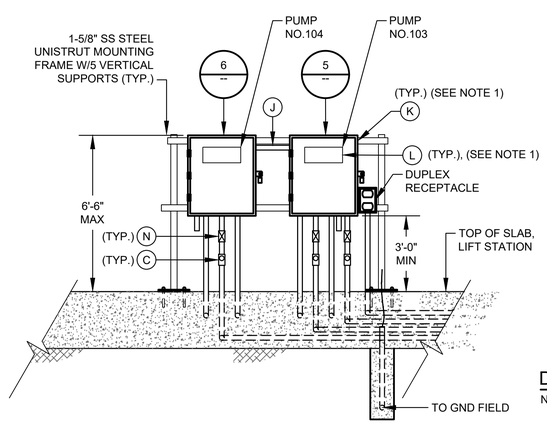

DETAIL 2A (--)
NTS

NOTES:

1. NAMEPLATES SHALL BE MOUNTED TO JUNCTION BOXES USING 316 STAINLESS STEEL HARDWARE.
2. MAINTAIN MINIMUM SEPARATION REQUIRED UNDER NEC ARTICLE 504, BETWEEN INTRINSICALLY SAFE CONTROL WIRING AND NON INTRINSICALLY SAFE MOTOR FEEDER WIRING.
3. UNLESS OTHERWISE NOTED, ALL EXTERIOR EXPOSED CONDUITS SHALL BE PVC COATED ALUMINUM.
4. UNLESS OTHERWISE NOTED, ALL NUTS, BOLTS, SCREWS WASHERS, ETC SHALL BE TYPE 316 STAINLESS STEEL.
5. ALL UNDERGROUND CONDUITS TO BE ENCASED IN REINFORCED CONCRETE DUCTBANK.
6. PROVIDE ANTI-CORROSIVE SPRAY ON ANY BARE METAL PARTS OR EXPOSED WIRE.
7. SEE WIRING SCHEMATICS FOR TERMINALS AND WIRE NUMBERS.
8. ANY CONDUIT REQUIRING A CSBE SEAL, SHALL BE A MINIMUM SIZE OF 2 1/2" PER CABLE.
9. DETAIL SHOWN MAY BE MODIFIED PER SITE SITUATION.
10. COORDINATE WITH WASTE WATER OPERATIONS ELECTRICAL ORGANIZATION FOR THE OPENING OF JUNCTION BOXES TO THE SIDE OF WET WELL IF REQUIRED DURING CONSTRUCTION.
11. THE ENCLOSURES WITH ELECTRICAL CIRCUITS SHALL BE A MINIMUM OF 5 FEET FROM ANY CLASSIFIED AREA, OTHERWISE EXPLOSION PROOF TYPE ENCLOSURES SHALL BE USED.
12. THE RECEPTACLES SHALL BE EXPLOSION PROOF TYPE IF INSTALLED WITHIN 5 FEET OF CLASSIFIED AREA, SHALL BE FIELD VERIFIED.

NO.	DATE	REVISION	APP.

GAI
Gupta & Associates, Inc.
CONSULTING ENGINEERING
Registration No. F-2593
302 Dennis St.,
Houston, Texas 77006
Tel: 713-636-2936
Fax: 713-636-2987
email: hforouzan@gaiconsulting.com

ARCADIS
Infrastructure · Water · Environment · Buildings
1330 Post Oak Blvd, Suite 2250
Houston, TX 77056
Tel: 713-953-4800
Fax: 713-977-4620
www.arcadis.com
Texas Registered Engineering Firm F-533

SURVEYED BY: AMANI ENGR.
FB NO. P-6335

STATE OF TEXAS
H. A. FOROUZAN
77748
REGISTERED
PROFESSIONAL ENGINEER
11/18/2025

CITY OF HOUSTON
HOUSTON PUBLIC WORKS

LIFT STATION REHABILITATION & RECONSTRUCTION
CONSENT DECREE

BRETSHIRE NO.1 LIFT STATION TYPICAL JUNCTION BOX DETAILS

E-11

WBS NUMBER	FOR CITY OF HOUSTON USE ONLY
R-000267-0175-4	
DRAWING SCALE	
AS SHOWN	
CITY OF HOUSTON PM	
NP NAWARAJ PANTA, P.E.	
SHEET NO. 59 OF 312	

FILE PATH: O:\H8103_Houston Lift Station Removal And Replacement (CMAR)\6 Drawings\Electrical\Working\Bretshire No.1\Bretshire No.1_E-11.dwg
PLOT STYLE: GAI.ctb PLOTTED: 11/21/2025 8:28 PM

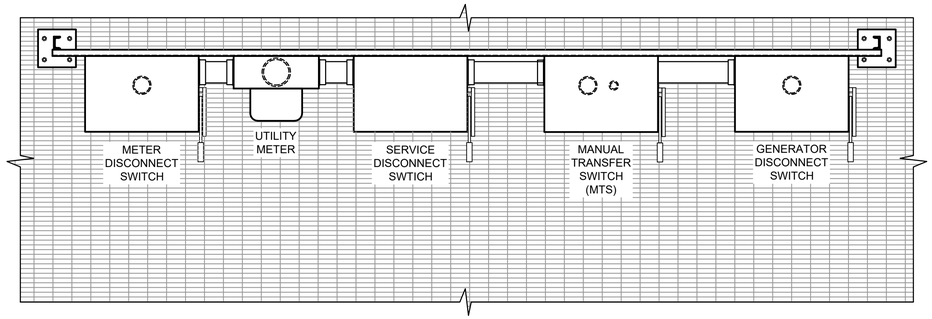

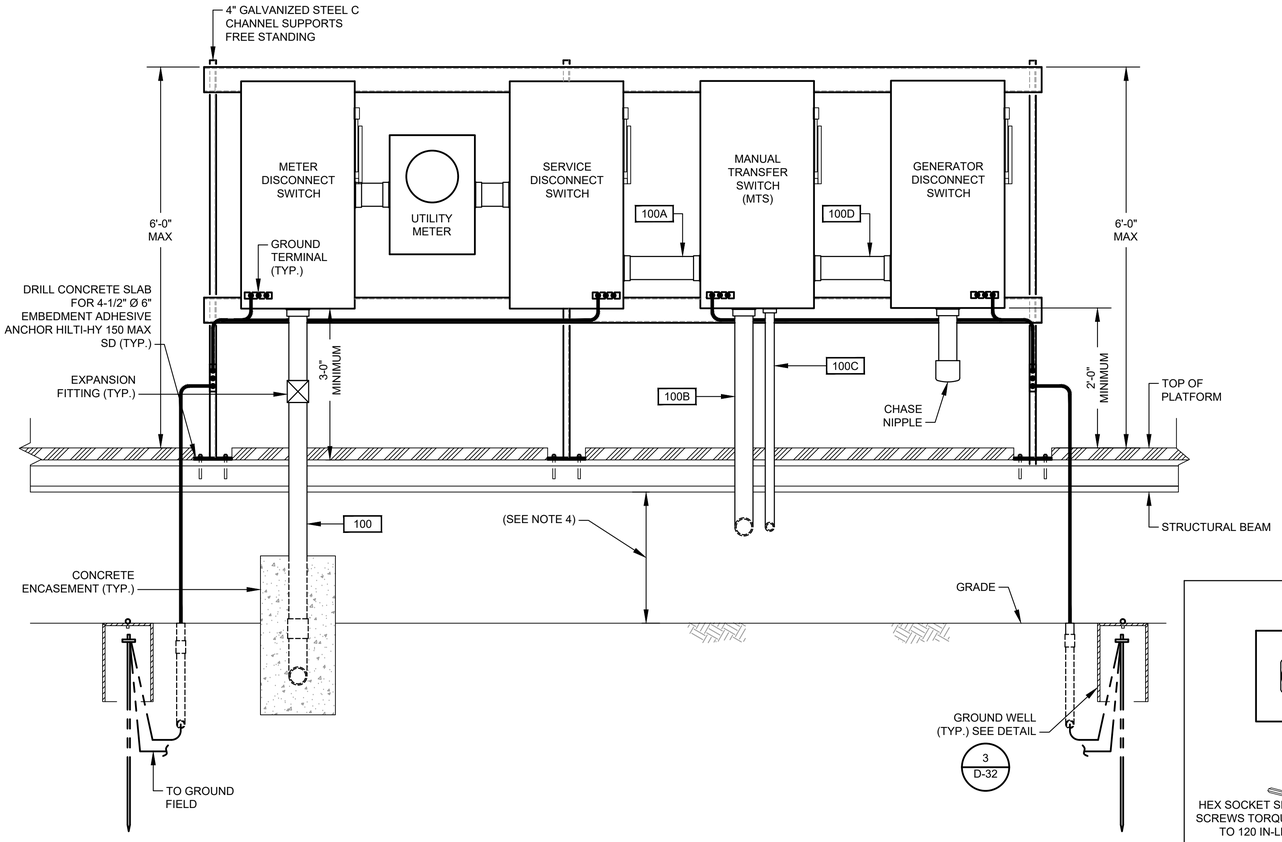

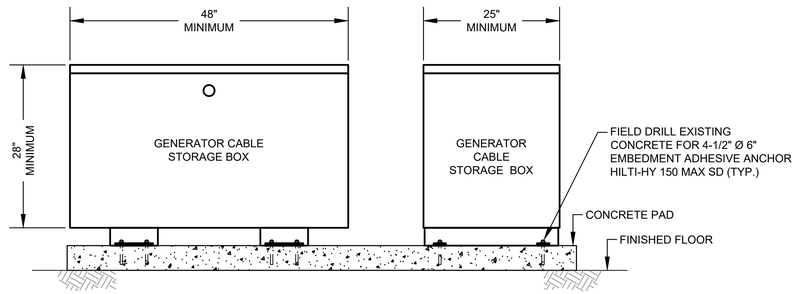

GENERATOR CABLE STORAGE BOX SIDE VIEW

DETAIL - / NTS.

ALLOWABLE DEVICE AMPACITY CHART DLO RHW-2 CAM-LOK CONNECTOR CABLE		
CABLE SIZE AWG	AMPS	CABLE LENGTH
#1	220	65 FEET
4/0	400	65 FEET

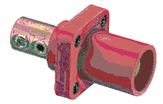

QUICK CONNECT FOR GENERATOR

PHOTOGRAPH 1 / NTS.

QUICK CONNECT FOR GENERATOR

PHOTOGRAPH 2 / NTS.

NOTES:

1. CHASE NIPPLE(S) WITH REMOVABLE CAP(S) FOR CONNECTION OF PORTABLE GENERATOR. NOTE: CAP(S) TO BE ATTACHED TO PANEL OR CONDUIT(S) BY STAINLESS STEEL CHAIN.
2. T.O.C DEFINED AS TOP OF PAVEMENT OR TOP OF PANEL ENCLOSURE PEDESTAL WHICHEVER IS HIGHER. (SEE NOTE B).
3. PROVIDE CENTER BOLLARD WHEN SPACE BETWEEN OUTSIDE BOLLARDS IS GREATER THEN 4'-0".
4. REFER TO STRUCTURAL DRAWINGS FOR ELEVATION.

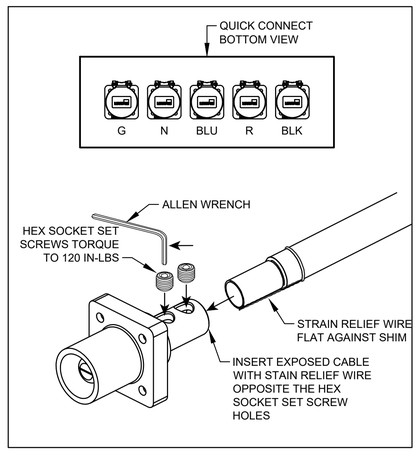

FEMALE PLUG CABLE TERMINATION

DETAIL - / NTS.

REFER TO PHOTO NO.1

NOTES:

1. CONTRACTOR TO INSTALL CONNECTORS AT BOTH ENDS OF CABLE.

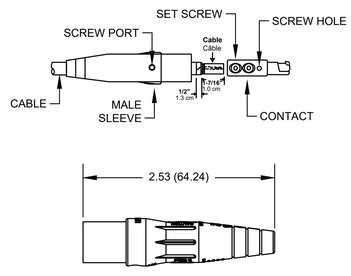

MALE PLUG CABLE TERMINATION

DETAIL - / NTS.

REFER TO PHOTO NO.2

NO.	DATE	REVISION	APP.

GAI
Gupta & Associates, Inc.
CONSULTING ENGINEERING
Registration No. F-2593
302 Dennis St., Houston, Texas 77006
Tel: 713-636-2936
Fax: 713-636-2967
email: hforouzan@gaiconsulting.com

ARCADIS
Infrastructure · Water · Environment · Buildings
1330 Post Oak Blvd, Suite 2250
Houston, TX 77056
Tel: 713-953-4800
Fax: 713-977-4620
www.arcadis.com
Texas Registered Engineering Firm F-533

SURVEYED BY: AMANI ENGR.
FB NO. P-6335

STATE OF TEXAS
H. A. FOROUZAN
77748
REGISTERED PROFESSIONAL ENGINEER
11/18/2025

CITY OF HOUSTON
HOUSTON PUBLIC WORKS

LIFT STATION REHABILITATION & RECONSTRUCTION CONSENT DECREE

BRETSHIRE NO.1 LIFT STATION ELECTRICAL SERVICE RACK DETAILS

E-12

WBS NUMBER	FOR CITY OF HOUSTON USE ONLY
R-000267-0175-4	
DRAWING SCALE	
AS SHOWN	
CITY OF HOUSTON PM	
NP NAWARAJ PANTA, P.E.	
SHEET NO. 60 OF 312	

FILE PATH: O:\H8103_Houston Lift Station Removal And Replacement (CMAR)\6 Drawings\Electrical\Working\Bretshire No.1_E-12.dwg
PLOT STYLE: GAI.ctb PLOTTED: 11/21/2025 8:29 PM

HMI

INFLUENT PUMP NO.101

SEAL FAIL ALARM	MOTOR OVERLOAD ALARM	MOTOR CURRENT	HIGH TEMP ALARM	IN HAND	IN AUTO	ON/OFF	START/ STOP
MA 1	MO 1	II 1	TH 1	HI 1	IA 1	YFS 1	YCS 1

INFLUENT PUMP NO.102

SEAL FAIL ALARM	MOTOR OVERLOAD ALARM	MOTOR CURRENT	HIGH TEMP ALARM	IN HAND	IN AUTO	ON/OFF	START/ STOP
MA 2	MO 2	II 2	TH 2	HI 2	IA 2	YFS 2	YCS 2

INFLUENT PUMP NO.103

SEAL FAIL ALARM	MOTOR OVERLOAD ALARM	MOTOR CURRENT	HIGH TEMP ALARM	IN HAND	IN AUTO	ON/OFF	START/ STOP
MA 3	MO 3	II 3	TH 3	HI 3	IA 3	YFS 3	YCS 3

INFLUENT PUMP NO.104 (STANDBY)

SEAL FAIL ALARM	MOTOR OVERLOAD ALARM	MOTOR CURRENT	HIGH TEMP ALARM	IN HAND	IN AUTO	ON/OFF	START/ STOP
MA 4	MO 4	II 4	TH 4	HI 4	IA 4	YFS 4	YCS 4

CONTROL PANEL PLC

CONTROL BUILDING

480V

INFLUENT PUMPS MCC

INFLUENT PUMP NO.101 — H/O/A — RUN

INFLUENT PUMP NO.102 — H/O/A — RUN

INFLUENT PUMP NO.103 — H/O/A — RUN

INFLUENT PUMP NO.104 — H/O/A — RUN

PRIMARY PLC

BACKUP PLC

INFLUENT PUMP CONTROL PANEL

ALARMS RESET

OIT

TO SHEET I-2

I-2

I-2

WET WELL

LT 1

LE 1

LT 2

LE 2

LSH 1A

TSH 1A

FS2 HIGH-HIGH LEVEL FLOAT SWITCH

LSH 2A

TSH 2A

LSH 3A

TSH 3A

FS1 HIGH LEVEL FLOAT SWITCH

LSH 4A

TSH 4A

M

16"

16" CHKVLV

16" PLV

18"

16" X 18"

18" x 20"

20" ARV

INFLUENT DISCHARGE

APP. | REVISION | NO. | DATE

GAI
Gupta & Associates, Inc.
CONSULTING ENGINEERING
Registration No. F-2593

302 Dennis St.,
Houston, Texas 77006
Tel: 713-636-2936
Fax: 713-636-2987
email: hforouzan@gaiconsulting.com

ARCADIS
Infrastructure - Water - Environment - Buildings
1330 Post Oak Blvd, Suite 2250
Houston, TX 77056
Tel: 713-953-4800
Fax: 713-977-4620
www.arcadis.com
Texas Registered Engineering Firm F-533

SURVEYED BY: AMANI ENGR.
FB NO. P-6335

STATE OF TEXAS
H. A. FOROUZAN
77748
REGISTERED PROFESSIONAL ENGINEER
11/18/2025

CITY OF HOUSTON

HOUSTON PUBLIC WORKS

LIFT STATION REHABILITATION & RECONSTRUCTION CONSENT DECREE

BRETSHIRE NO.1 LIFT STATION PROCESS & INSTRUMENTATION DIAGRAM-I

I-1

WBS NUMBER	FOR CITY OF HOUSTON USE ONLY
R-000267-0175-4	
DRAWING SCALE	
NONE	
CITY OF HOUSTON PM	
NP NAWARAJ PANTA, P.E.	
SHEET NO. 61 OF 312	

FILE PATH: O:\H8103_Houston Lift Station Removal And Replacement (CMAR)\6 Drawings\Instrumentation And Control\Working\Brethshire No.1\Bre
PLOT STYLE: COH.ctb PLOTTED: 11/21/2025 9:44 PM

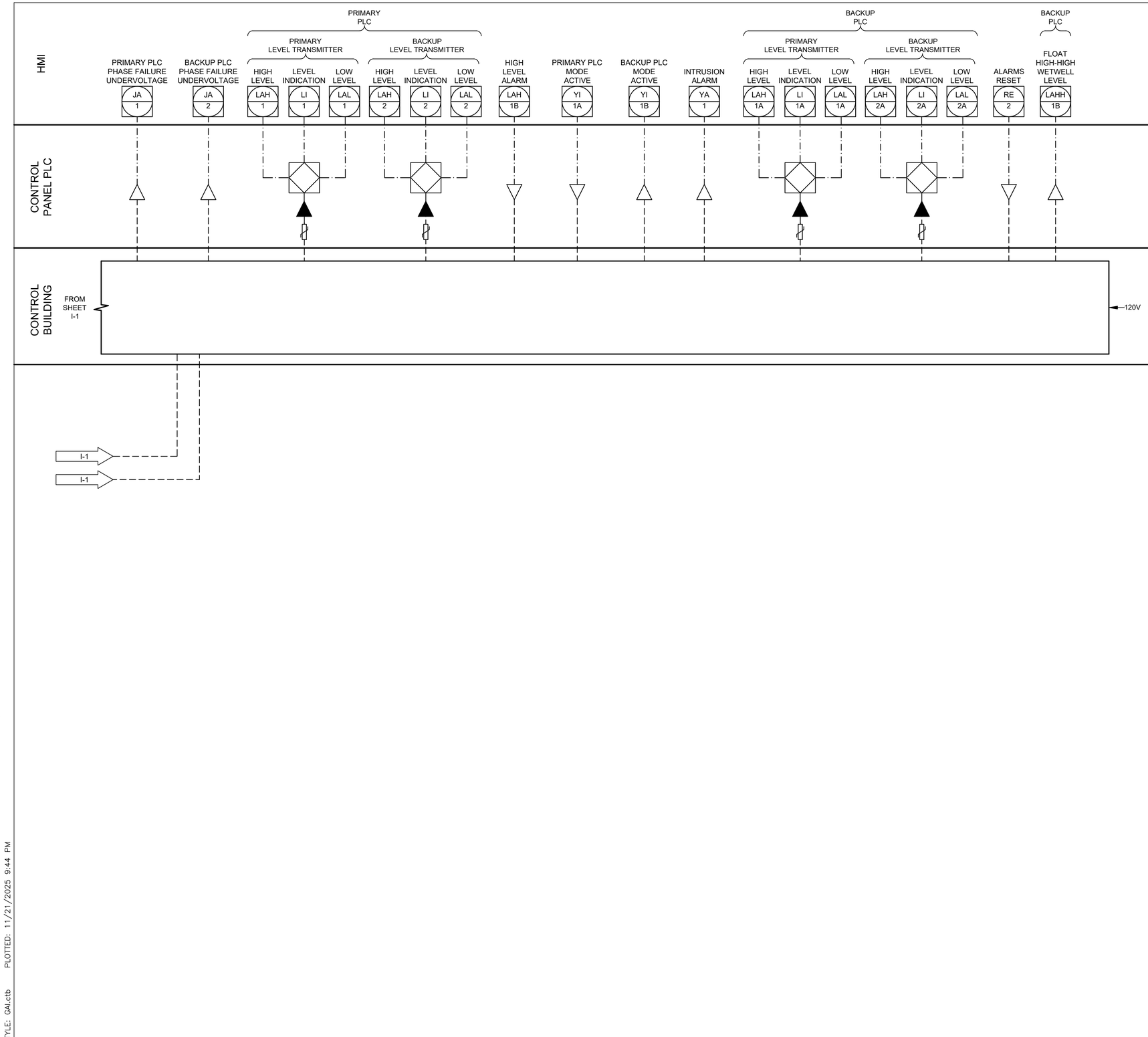

APP.
REVISION
NO. DATE

FILE PATH: O:\H8103_Houston Lift Station Removal And Replacement (CMAR)\6 Drawings\Instrumentation And Control\Working\Brethshire No.1\Brethshire No.1_I-02.dwg
PLOT STYLE: GAI.ctb PLOTTED: 11/21/2025 9:44 PM

GAI
Gupta & Associates, Inc.
CONSULTING ENGINEERING
Registration No. F-2593
302 Dennis St.,
Houston, Texas 77006
Tel: 713-636-2936
Fax: 713-636-2967
email: hforouzan@gaiconsulting.com

ARCADIS
Infrastructure · Water · Environment · Buildings
1330 Post Oak Blvd, Suite 2250
Houston, TX 77056
Tel: 713-953-4800
Fax: 713-977-4620
www.arcadis.com
Texas Registered Engineering Firm F-533

SURVEYED BY: AMANI ENGR.
FB NO. P-6335

STATE OF TEXAS
H. A. FOROUZAN
77748
REGISTERED PROFESSIONAL ENGINEER
11/18/2025

CITY OF HOUSTON
HOUSTON PUBLIC WORKS

LIFT STATION REHABILITATION & RECONSTRUCTION CONSENT DECREE

BRETSHIRE NO.1 LIFT STATION PROCESS & INSTRUMENTATION DIAGRAM-II

I-2

WBS NUMBER	FOR CITY OF HOUSTON USE ONLY
R-000267-0175-4	
DRAWING SCALE	
NONE	
CITY OF HOUSTON PM	
NP NAWARAJ PANTA, P.E.	
SHEET NO. 62 OF 312	

EQUIPMENT AND DEVICE SCHEDULE

ITEM	QUANTITY	DESCRIPTION
A	1	SINGLE CHANNEL INTRINSICALLY SAFE RELAY
B	2	ANALOG SIGNAL ISOLATOR
C	4	PUMP PROTECTION MODULE
D	*	NOT USED
E	4	HAND-OFF-AUTO SWITCH, 3 POSITION, HEAVY-DUTY OIL TIGHT WITH 2 SETS OF CONTACT BLOCKS (PUMP CONTROL)
F	4	INDICATING LIGHT, HEAVY DUTY, OILTIGHT, RED, 24 VDC, LED, WITH "RUN" LEGEND
G	*	NOT USED.
H	1	SWITCH FOR CABINET LIGHT, 120V, 20A, SPST
I	2	DUPLEX RECEPTACLE, 120V, 20A, 2 WIRE, GROUNDED, GFCI TYPE
J	1	24" LED STRIP LIGHT 120V SUITABLE FOR ZERO DEGREE OPERATION
K	*	NAMEPLATES, SEE SPECIFICATIONS (SEE NAMEPLATE SCHEDULE)
L	2	PROGRAMMABLE LOGIC CONTROLLER WITH EXPANSION UNIT
M	*	CONTROL RELAY 24VDC RELAY WITH THREE FORM C CONTACTS AND 11 PIN SOCKET BASE
N	-	NOT USED
O	-	NOT USED
P	1	NEMA 12 GASKETED STEEL ENCLOSURES WITHOUT VENTS 72" H X 20" D X 60" W
Q	*	TERMINAL BLOCK
R	1	WIRE DUCT 2" WIDE X 2" DEEP MINIMUM
S	1	GROUND BUS
T	1	COMMUNICATION ETHERNET SWITCH
U	9	CARTRIDGE
V	1	PUSHBUTTON, BLACK WITH RESET LEGEND
W	-	NOT USED
X	*	FUSED TERMINAL BLOCKS
Y	1	POWER SURGE PROTECTOR - CONTROL POWER
Z	1	PROGRAMMING SCREEN (OIT)
AA	*	120VAC SYSTEM FUSES
BB	1	120VAC - 24VDC POWER SUPPLY, 5A
CC	*	NOT USED
DD	2	INDICATING LIGHT, HEAVY DUTY, OILTIGHT, GREEN, 24VDC, LED WITH "BACKUP PLC" & "PRIMARY PLC" LEGEND
EE	2	ANALOG I/O SURGE SUPPRESSOR
FF	-	NOT USED

* - AS SCHEDULED

NAMEPLATE SCHEDULE

DESIGNATION	ENGRAVED
N1	PUMP STATION DESIGNATION
N2	PUMP NO. 1
N3	PUMP NO. 2
N4	PUMP NO. 3
N5	PUMP NO. 4
N6	NOT USED.
N7	NOT USED.
N8	NOT USED.
N9	NOT USED.
N10	PROGRAMMING SCREEN
N11	NOT USED.
N12	PRIMARY PLC
N13	BACKUP PLC
N14	MOTOR DATA

HORSEPOWER (OUTPUT) ----------
RPM AT FULL LOAD ----------
TIME RATING ----------
FREQUENCY ----------
NUMBER OF PHASES ----------
MODEL NUMBER ----------
RATED VOLTAGE ----------
SERVICE FACTOR ----------
FULL LOAD AMPS ----------
INSULATION CLASS ----------
NEMA DESIGN LETTER ----------
TEMPERATURE RISE ----------
NEMA FRAME SIZE ----------
DATE OF MANUFACTURE ----------
THERMO PROTECTION (IF REQUIRED) --
MOISTURE PROTECTION (IF REQUIRED)-

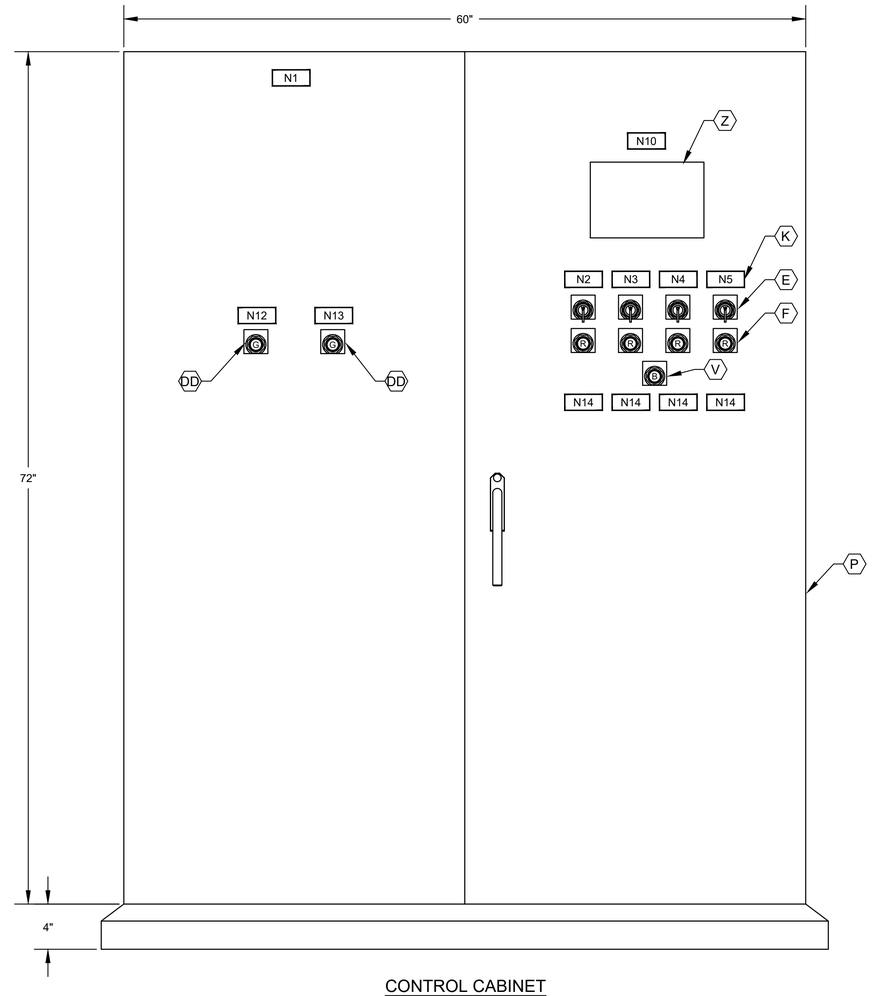

CONTROL CABINET
FRONT DOOR ELEVATION

NOTES:

1. NAMEPLATES SHALL BE MOUNTED TO PANELS USING STAINLESS STEEL HARDWARE.
2. REFER SPECIFICATIONS FOR ALL PANEL COMPONENTS.

NO.	DATE	REVISION	APP.

GAI
Gupta & Associates, Inc.
CONSULTING ENGINEERING
Registration No. F-2593
302 Dennis St.,
Houston, Texas 77006
Tel: 713-636-2936
Fax: 713-636-2987
email: hforouzan@gaiconsulting.com

ARCADIS
Infrastructure · Water · Environment · Buildings
1330 Post Oak Blvd, Suite 2250
Houston, TX 77056
Tel: 713-953-4800
Fax: 713-977-4620
www.arcadis.com
Texas Registered Engineering Firm F-533

SURVEYED BY: AMANI ENGR.
FB NO. P-6335

STATE OF TEXAS
H. A. FOROUZAN
77748
REGISTERED PROFESSIONAL ENGINEER
11/18/2025

CITY OF HOUSTON
HOUSTON PUBLIC WORKS

LIFT STATION REHABILITATION & RECONSTRUCTION
CONSENT DECREE

BRETSHIRE NO.1 LIFT STATION CONTROL CABINET EQUIPMENT LAYOUT & SCHEDULE

I-3

WBS NUMBER	FOR CITY OF HOUSTON USE ONLY
R-000267-0175-4	
DRAWING SCALE	
AS SHOWN	
CITY OF HOUSTON PM	
NP NAWARAJ PANTA, P.E.	
SHEET NO. 63 OF 312	

FILE PATH: O:\H8103_Houston Lift Station Removal And Replacement (CMAR)\6 Drawings\Instrumentation And Control\Working\Bretshire No.1\Bretshire No.1_I-03.dwg
PLOT STYLE: GAI.ctb PLOTTED: 11/21/2025 9:45 PM

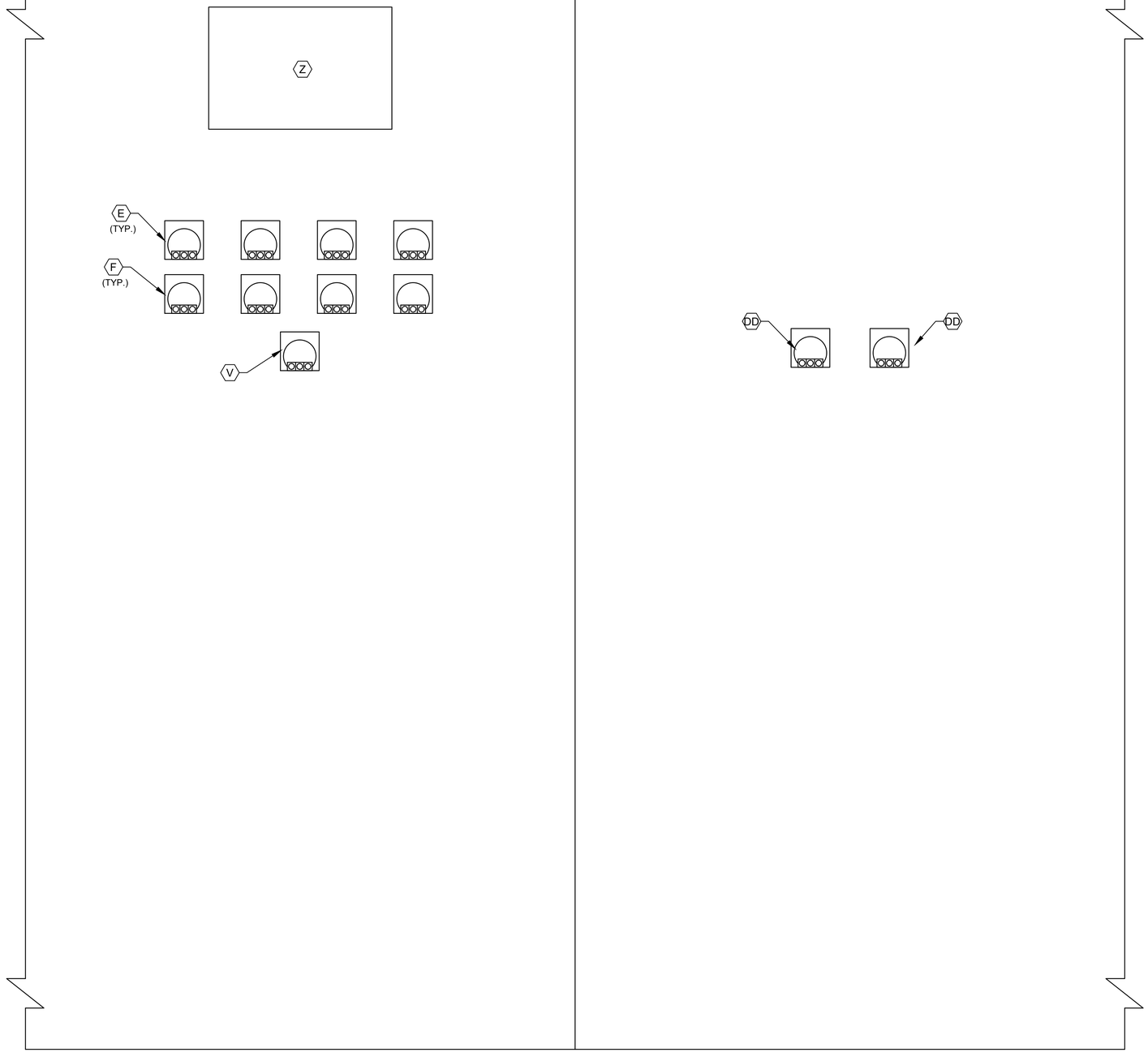

CONTROL CABINET
BACK DOOR ELEVATION

NOTES:

1. SEE SHEET I-3 FOR EQUIPMENT SCHEDULE.

NO.	DATE	REVISION	APP.

GAI
Gupta & Associates, Inc.
CONSULTING ENGINEERING
Registration No. F-2593
302 Dennis St.,
Houston, Texas 77006
Tel: 713-636-2936
Fax: 713-636-2967
email: hforouzan@gaiconsulting.com

ARCADIS
Infrastructure · Water · Environment · Buildings
1330 Post Oak Blvd, Suite 2250
Houston, TX 77056
Tel: 713-953-4800
Fax: 713-977-4620
www.arcadis.com
Texas Registered Engineering Firm F-533

SURVEYED BY: AMANI ENGR.
FB NO. P-6335

STATE OF TEXAS
H. A. FOROUZAN
77748
REGISTERED
PROFESSIONAL ENGINEER
11/18/2025

CITY OF HOUSTON
HOUSTON PUBLIC WORKS

LIFT STATION REHABILITATION & RECONSTRUCTION
CONSENT DECREE

BRETSHIRE NO.1 LIFT STATION CONTROL CABINET BACK DOOR ELEVATION

I-4

WBS NUMBER	FOR CITY OF HOUSTON USE ONLY
R-000267-0175-4	
DRAWING SCALE	
AS SHOWN	
CITY OF HOUSTON PM	
NP NAWARAJ PANTA, P.E.	
SHEET NO. 64 OF 312	

FILE PATH: O:\H8103_Houston Lift Station Removal And Replacement (CMAR)\6 Drawings\Instrumentation And Control\Working\Brethshire No.1\Brethshire No.1_I-04.dwg
PLOT STYLE: GAI.ctb PLOTTED: 11/21/2025 9:45 PM

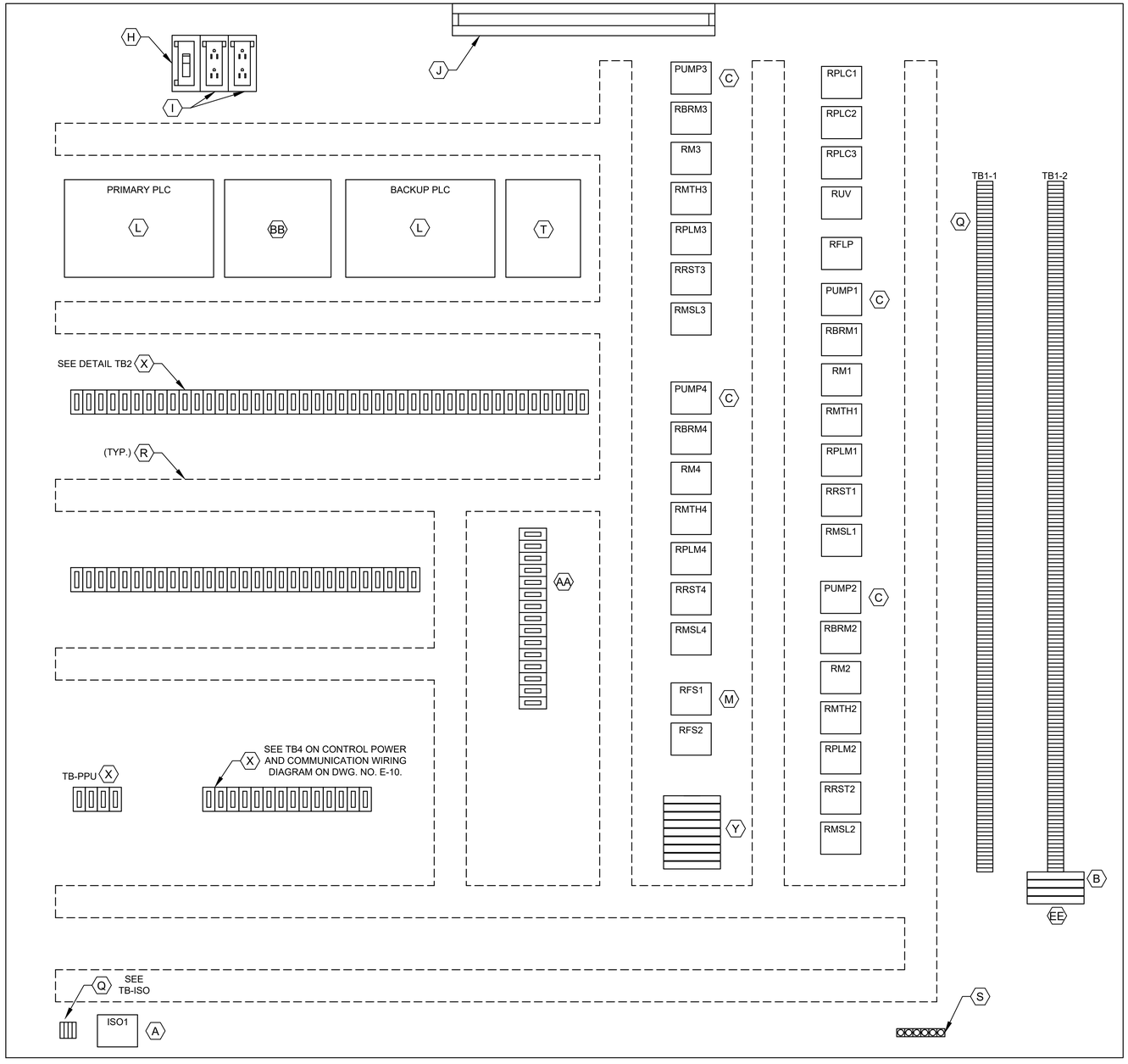

CONTROL PANEL ELEVATION

LEGEND	
TAG	DESCRIPTION
RMTH	MOTOR HIGH TEMPERATURE ALARM RELAY
RPLMP	PLC PUMP RUN RELAY
RRST	PUMP RESET AUX RELAY
RPLC	PLC MODE AUX RELAY
RM	PUMP RUN AUX RELAY
RUV	UNDER VOLTAGE RELAY
RBRM	BACKUP SYSTEM RUN RELAY
ISO	INTRINSICALLY SAFE RELAY
RFS	PUMP RUN FLOAT SWITCH RELAY
RMSL	MOTOR SEAL LEAK ALARM RELAY
RFLP	FLOAT LOCKOUT PUMP RELAY

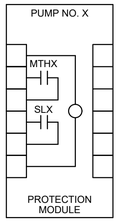

PUMP PROTECTION MODULE DETAIL, ITEM C

NOTE: REPLACE "X" WITH APPROPRIATE PUMP NO.

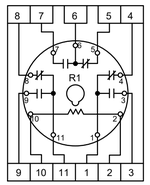

RELAY DETAIL ITEM M

L1A
L1N
SPARE
3
3N
SPARE
49
50
51
52
53
54
1004
1
24V-
24V-
SPARE
1002
2
11
1001
1001A
12
1003
1003A
34
3N
19
20
102
103
3P1
109
110
112
116
117
120
121
122
123
124
125
126
127
SPARE
SPARE
202
203
3P2
209
210
212
216
217
220
221
222
223
224
225
226
227

DETAIL TB1-1

SPARE
SPARE
302
303
3P3
309
310
312
316
317
320
321
322
323
324
325
326
327
SPARE
SPARE
402
403
3P4
409
410
412
416
417
420
421
422
423
424
425
426
427

DETAIL TB1-2

36A
37A
50
52
54
52A
52A
54A
L+
M
35B
38B
41B
44B
SPARE
SPARE
47B
50B
53B
13B
13AB
B
L+
M
14B
14AB
14GB
119
SPARE
L+
M
13
13A
13G
14
14A
14G
1M
2M
1L
3
30
32
34
37
38
41
33B
45
18B
SPARE

DETAIL TB2

100
112
113
114
115
117
118
119
120
121
SPARE
200
212
213
214
215
217
218
219
220
221
SPARE
300
312
313
314
315
317
318
319
320
321
SPARE
400
412
413
414
415
417
418
419
420
421
SPARE

DETAIL TB2

1500
1501
1503
1504

DETAIL TB-ISO

NOTES:

1. SEE SHEET I-3 FOR EQUIPMENT SCHEDULE.

GAI
Gupta & Associates, Inc.
CONSULTING ENGINEERING
Registration No. F-2593
302 Dennis St.,
Houston, Texas 77006
Tel: 713-636-2936
Fax: 713-636-2987
email: hforouzan@gaiconsulting.com

ARCADIS
Infrastructure · Water · Environment · Buildings
1330 Post Oak Blvd, Suite 2250
Houston, TX 77056
Tel: 713-953-4800
Fax: 713-977-4620
www.arcadis.com
Texas Registered Engineering Firm F-533

SURVEYED BY: AMANI ENGR.
FB NO. P-6335

STATE OF TEXAS
H. A. FOROUZAN
77748
REGISTERED PROFESSIONAL ENGINEER
11/18/2025

CITY OF HOUSTON

HOUSTON PUBLIC WORKS

LIFT STATION REHABILITATION & RECONSTRUCTION CONSENT DECREE

BRETSHIRE NO.1 LIFT STATION CONTROL CABINET EQUIPMENT LAYOUT

I-5

WBS NUMBER	FOR CITY OF HOUSTON USE ONLY
R-000267-0175-4	
DRAWING SCALE	
AS SHOWN	
CITY OF HOUSTON PM	
NP NAWARAJ PANTA, P.E.	
SHEET NO. 65 OF 312	

NO.	DATE	REVISION	APP.

FILE PATH: O:\H8103_Houston Lift Station Removal And Replacement (CMAR)\6 Drawings\Instrumentation And Control\Working\Bretshire No.1\Bretshire No.1_I-05.dwg
PLOT STYLE: GAI.ctb PLOTTED: 11/21/2025 9:45 PM

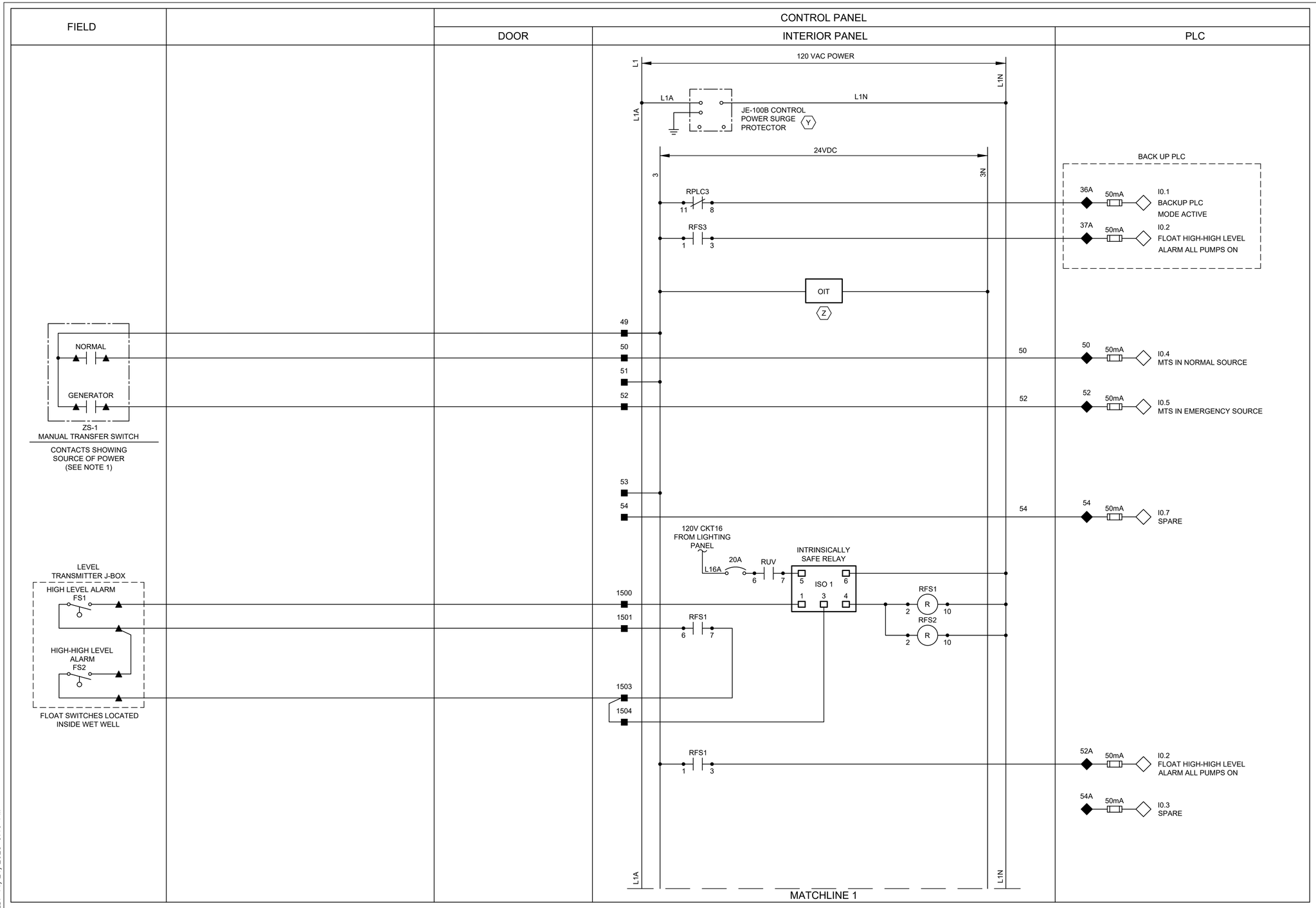

LEGEND

- △ DEVICE OR FIELD TERMINAL LOCATED AT MOTOR
- ✳ DEVICE OR FIELD TERMINAL LOCATED REMOTE
- □ DEVICE OR FIELD TERMINAL LOCATED AT MCC/POWER PANEL
- ■ FIELD TERMINAL LOCATED AT CONTROL PANEL
- ▲ REMOTE TERMINAL
- ● DEVICE TERMINAL NO.
- ◆ PLC INTERFACE TERMINAL

NOTES:

1. PROVIDE MANUAL TRANSFER SWITCH DRY CONTACT.
2. ALL FLOAT CONTROL CIRCUIT WIRES COLOR SHALL BE YELLOW.

NO.	DATE	REVISION	APP.

GAI
Gupta & Associates, Inc.
CONSULTING ENGINEERING
Registration No. F-2593
302 Dennis St.,
Houston, Texas 77006
Tel: 713-636-2936
Fax: 713-636-2987
email: hforouzan@gaiconsulting.com

ARCADIS
Infrastructure · Water · Environment · Buildings
1330 Post Oak Blvd, Suite 2250
Houston, TX 77056
Tel: 713-953-4800
Fax: 713-977-4620
www.arcadis.com
Texas Registered Engineering Firm F-533

SURVEYED BY: AMANI ENGR.
FB NO. P-6335

STATE OF TEXAS
H. A. FOROUZAN
77748
REGISTERED
PROFESSIONAL ENGINEER
11/18/2025

CITY OF HOUSTON

HOUSTON PUBLIC WORKS

LIFT STATION REHABILITATION & RECONSTRUCTION
CONSENT DECREE

BRETSHIRE NO.1 LIFT STATION CONTROL WIRING DIAGRAM-I

I-6

WBS NUMBER	FOR CITY OF HOUSTON USE ONLY
R-000267-0175-4	
DRAWING SCALE	
NONE	
CITY OF HOUSTON PM	
NP NAWARAJ PANTA, P.E.	
SHEET NO. 66 OF 312	

FILE PATH: O:\H8103_Houston Lift Station Removal And Replacement (CMAR)\6 Drawings\Instrumentation And Control\Working\Brethshire No.1\Brethshire No.1_I-06.dwg
PLOT STYLE: GAI.ctb PLOTTED: 11/21/2025 9:46 PM

FIELD	MOTOR CONTROL CENTER (INDOOR)	CONTROL PANEL	
		DOOR	INTERIOR PANEL

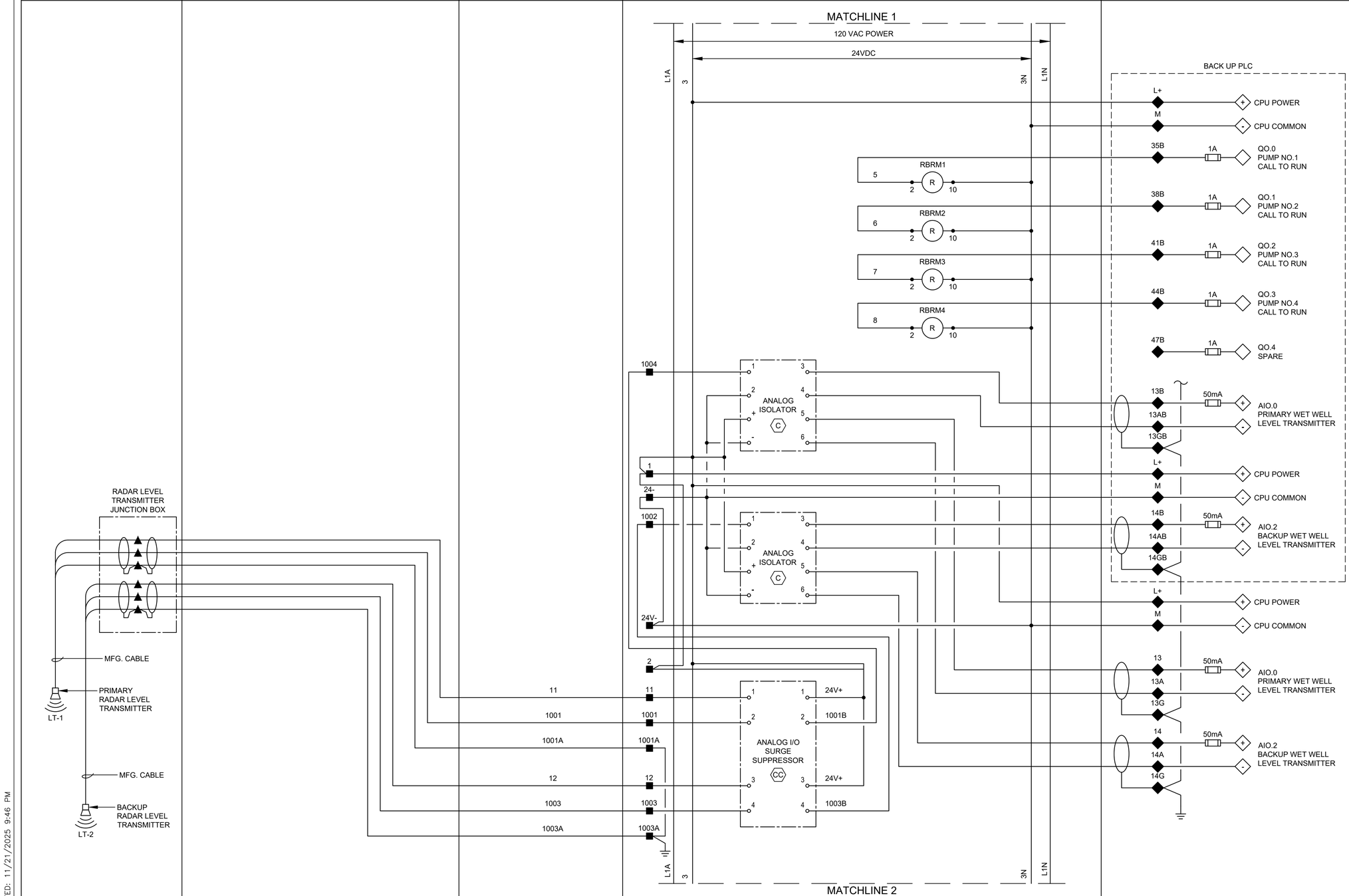

LEGEND

- △ DEVICE OR FIELD TERMINAL LOCATED AT MOTOR
- ✳ DEVICE OR FIELD TERMINAL LOCATED REMOTE
- □ DEVICE OR FIELD TERMINAL LOCATED AT MCC/POWER PANEL
- ■ FIELD TERMINAL LOCATED AT CONTROL PANEL
- ▲ REMOTE TERMINAL
- ● DEVICE TERMINAL NO.
- ◆ PLC INTERFACE TERMINAL

NO.	DATE	REVISION	APP.

GAI
Gupta & Associates, Inc.
CONSULTING ENGINEERING
Registration No. F-2593
302 Dennis St.,
Houston, Texas 77006
Tel: 713-636-2936
Fax: 713-636-2987
email: hforouzan@gaiconsulting.com

ARCADIS
Infrastructure · Water · Environment · Buildings
1330 Post Oak Blvd, Suite 2250
Houston, TX 77056
Tel: 713-953-4800
Fax: 713-977-4620
www.arcadis.com
Texas Registered Engineering Firm F-533

STATE OF TEXAS
H. A. FOROUZAN
77748
REGISTERED
PROFESSIONAL ENGINEER
11/18/2025

SURVEYED BY: AMANI ENGR.
FB NO. P-6335

CITY OF HOUSTON

HOUSTON PUBLIC WORKS

LIFT STATION REHABILITATION & RECONSTRUCTION CONSENT DECREE

BRETSHIRE NO.1 LIFT STATION CONTROL WIRING DIAGRAM-II

I-7

WBS NUMBER	FOR CITY OF HOUSTON USE ONLY
R-000267-0175-4	
DRAWING SCALE	
NONE	
CITY OF HOUSTON PM	
NP NAWARAJ PANTA, P.E.	
SHEET NO. 67 OF 312	

FILE PATH: O:\H8103_Houston Lift Station Removal And Replacement (CMAR)\6 Drawings\Instrumentation And Control\Working\Bretshire No.1\Bretshire No.1_I-07.dwg
PLOT STYLE: GAI.ctb PLOTTED: 11/21/2025 9:46 PM

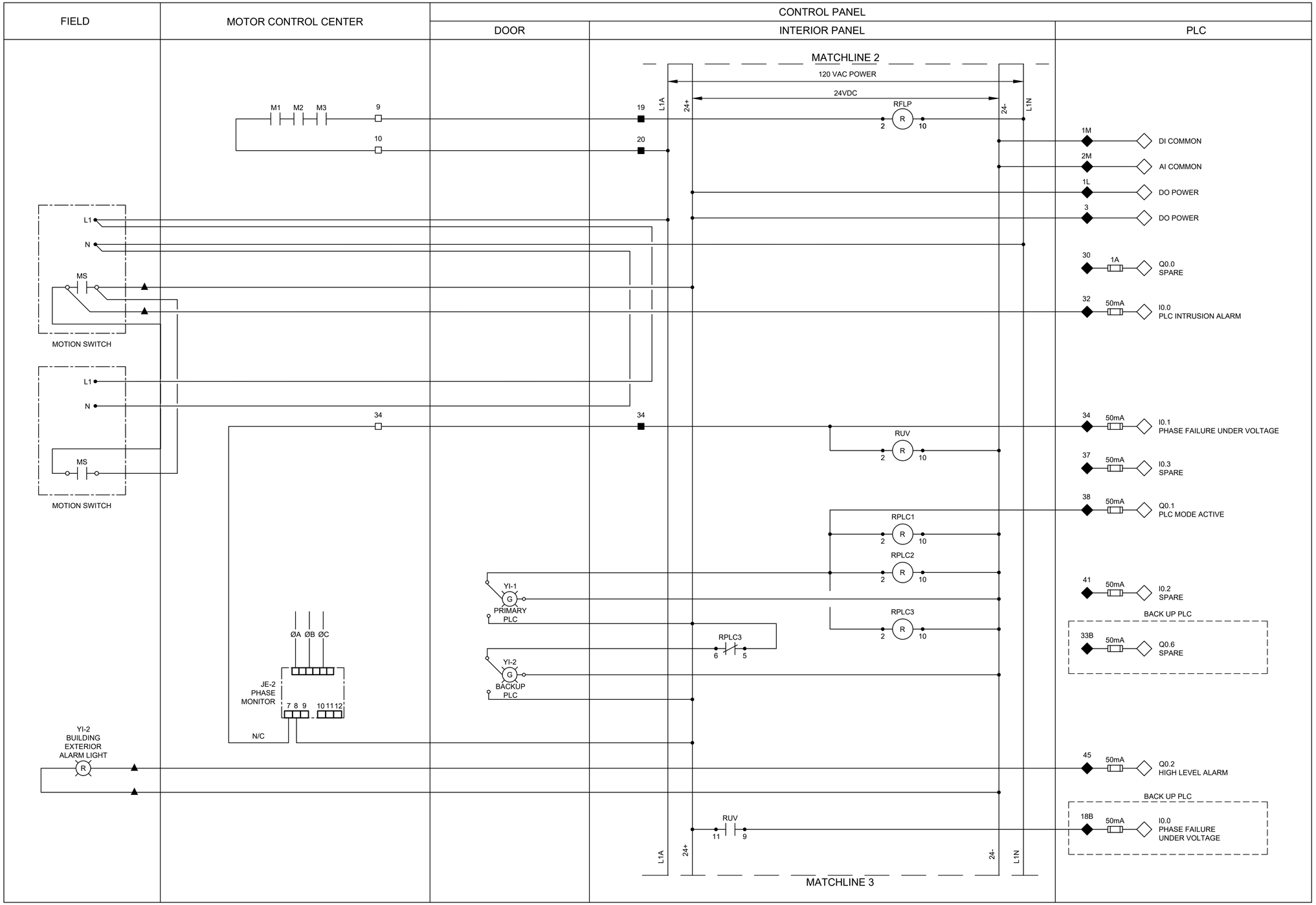

LEGEND

- △ DEVICE OR FIELD TERMINAL LOCATED AT MOTOR
- ✳ DEVICE OR FIELD TERMINAL LOCATED REMOTE
- □ DEVICE OR FIELD TERMINAL LOCATED AT MCC/POWER PANEL
- ■ FIELD TERMINAL LOCATED AT CONTROL PANEL
- ▲ REMOTE TERMINAL
- ● DEVICE TERMINAL NO.
- ◆ PLC INTERFACE TERMINAL

NO.	DATE	REVISION	APP.

GAI
Gupta & Associates, Inc.
CONSULTING ENGINEERING
Registration No. F-2593
302 Dennis St., Houston, Texas 77006
Tel: 713-636-2936
Fax: 713-636-2987
email: hforouzan@gaiconsulting.com

ARCADIS
Infrastructure · Water · Environment · Buildings
1330 Post Oak Blvd, Suite 2250
Houston, TX 77056
Tel: 713-953-4800
Fax: 713-977-4620
www.arcadis.com
Texas Registered Engineering Firm F-533

SURVEYED BY: AMANI ENGR.
FB NO. P-6335

STATE OF TEXAS
H. A. FOROUZAN
77748
REGISTERED PROFESSIONAL ENGINEER
11/18/2025

CITY OF HOUSTON

HOUSTON PUBLIC WORKS

LIFT STATION REHABILITATION & RECONSTRUCTION CONSENT DECREE

BRETSHIRE NO.1 LIFT STATION CONTROL WIRING DIAGRAM-III

I-8

WBS NUMBER	FOR CITY OF HOUSTON USE ONLY
R-000267-0175-4	
DRAWING SCALE	
NONE	
CITY OF HOUSTON PM	
NP NAWARAJ PANTA, P.E.	
SHEET NO. 68 OF 312	

FILE PATH: O:\H8103_Houston Lift Station Removal And Replacement (CMAR)\6 Drawings\Instrumentation And Control\!Working\Brethshire No.1\Brethshire No.1_I-08.dwg
PLOT STYLE: GAI.ctb PLOTTED: 11/21/2025 9:46 PM

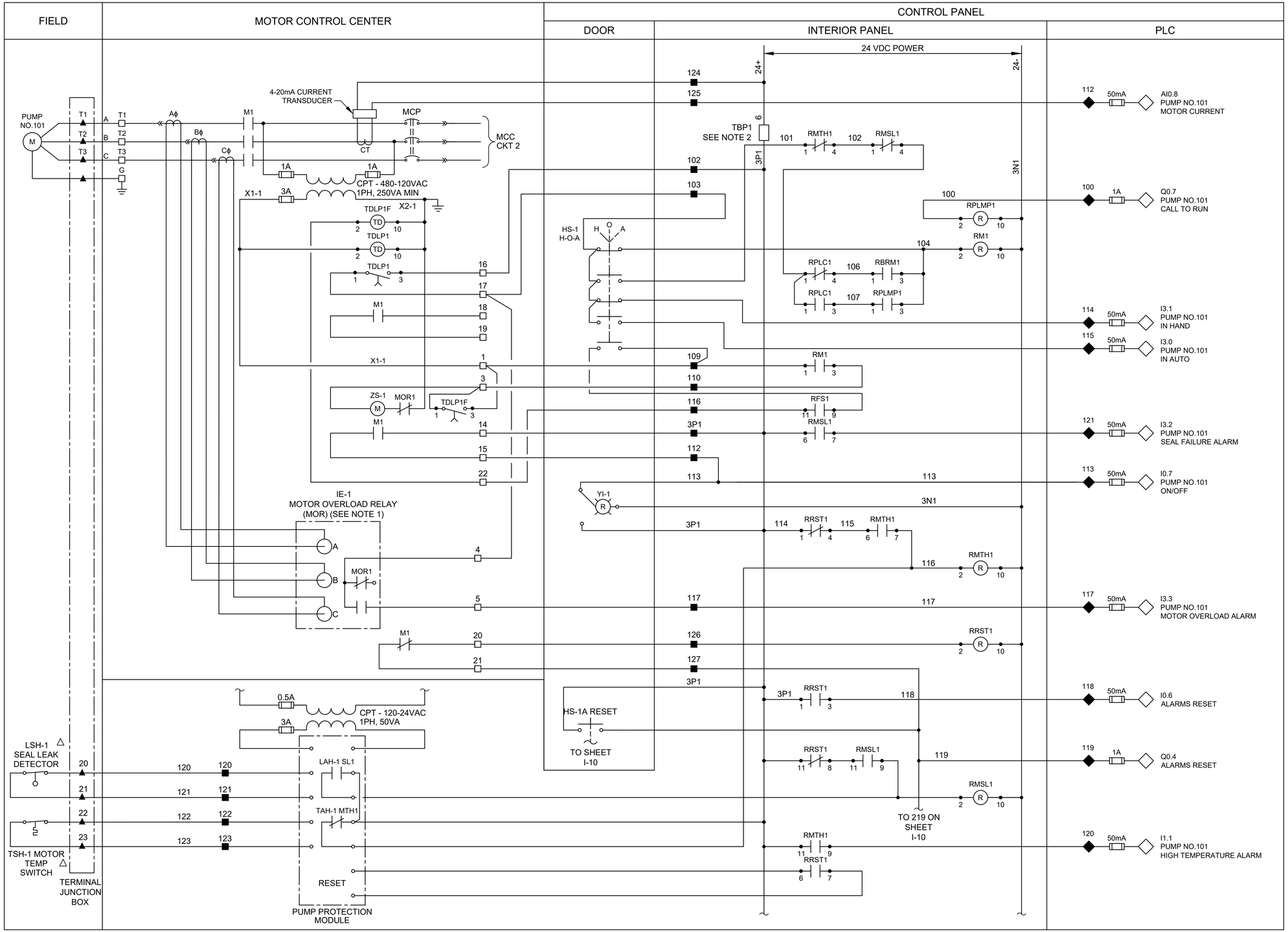

LEGEND

- △ DEVICE OR FIELD TERMINAL LOCATED AT MOTOR
- ✳ DEVICE OR FIELD TERMINAL LOCATED REMOTE
- □ DEVICE OR FIELD TERMINAL LOCATED AT MCC/POWER PANEL
- ■ FIELD TERMINAL LOCATED AT CONTROL PANEL
- ▲ REMOTE TERMINAL
- ● DEVICE TERMINAL NO.
- ◆ PLC INTERFACE TERMINAL

NOTES:

1. MOTOR OVERLOAD RELAY OUTPUT CONTACT SHOWN NORMALLY CLOSED WHEN RELAY IS DE-ENERGIZED, OPEN WHEN ENERGIZED, AND CLOSED WHEN IN ALARM. VERIFY OPERATION OF RELAY PROVIDED AND ADJUST CONNECTION OF RMOR AUXILIARY RELAYS.
2. FUSED TERMINAL ON TERMINAL BLOCK TB4 SEE CONTROL POWER AND COMMUNICATION WIRING DIAGRAM DRAWING NO. E-10.
3. ALL FLOAT CONTROL CIRCUIT WIRES COLOR SHALL BE YELLOW.

GAI
Gupta & Associates, Inc.
CONSULTING ENGINEERING
Registration No. F-2593
302 Dennis St., Houston, Texas 77006
Tel: 713-636-2936
Fax: 713-636-2987
email: hforouzan@gaiconsulting.com

ARCADIS
Infrastructure · Water · Environment · Buildings
1330 Post Oak Blvd, Suite 2250
Houston, TX 77056
Tel: 713-953-4800
Fax: 713-977-4620
www.arcadis.com
Texas Registered Engineering Firm F-533

SURVEYED BY: AMANI ENGR.
FB NO. P-6335

STATE OF TEXAS
H. A. FOROUZAN
77748
REGISTERED PROFESSIONAL ENGINEER
11/18/2025

CITY OF HOUSTON

HOUSTON PUBLIC WORKS

LIFT STATION REHABILITATION & RECONSTRUCTION CONSENT DECREE

BRETSHIRE NO.1 LIFT STATION CONTROL WIRING DIAGRAM PUMP-101

I-9

WBS NUMBER	FOR CITY OF HOUSTON USE ONLY
R-000267-0175-4	
DRAWING SCALE	
NONE	
CITY OF HOUSTON PM	
NP NAWARAJ PANTA, P.E.	
SHEET NO. 69 OF 312	

NO.	DATE	REVISION	APP.

FILE PATH: O:\H8103_Houston Lift Station Removal And Replacement (CMAR)\6 Drawings\Instrumentation And Control\Working\Brethshire No.1\Brethshire No.1_I-09.dwg
PLOT STYLE: GAI.ctb PLOTTED: 11/21/2025 9:47 PM

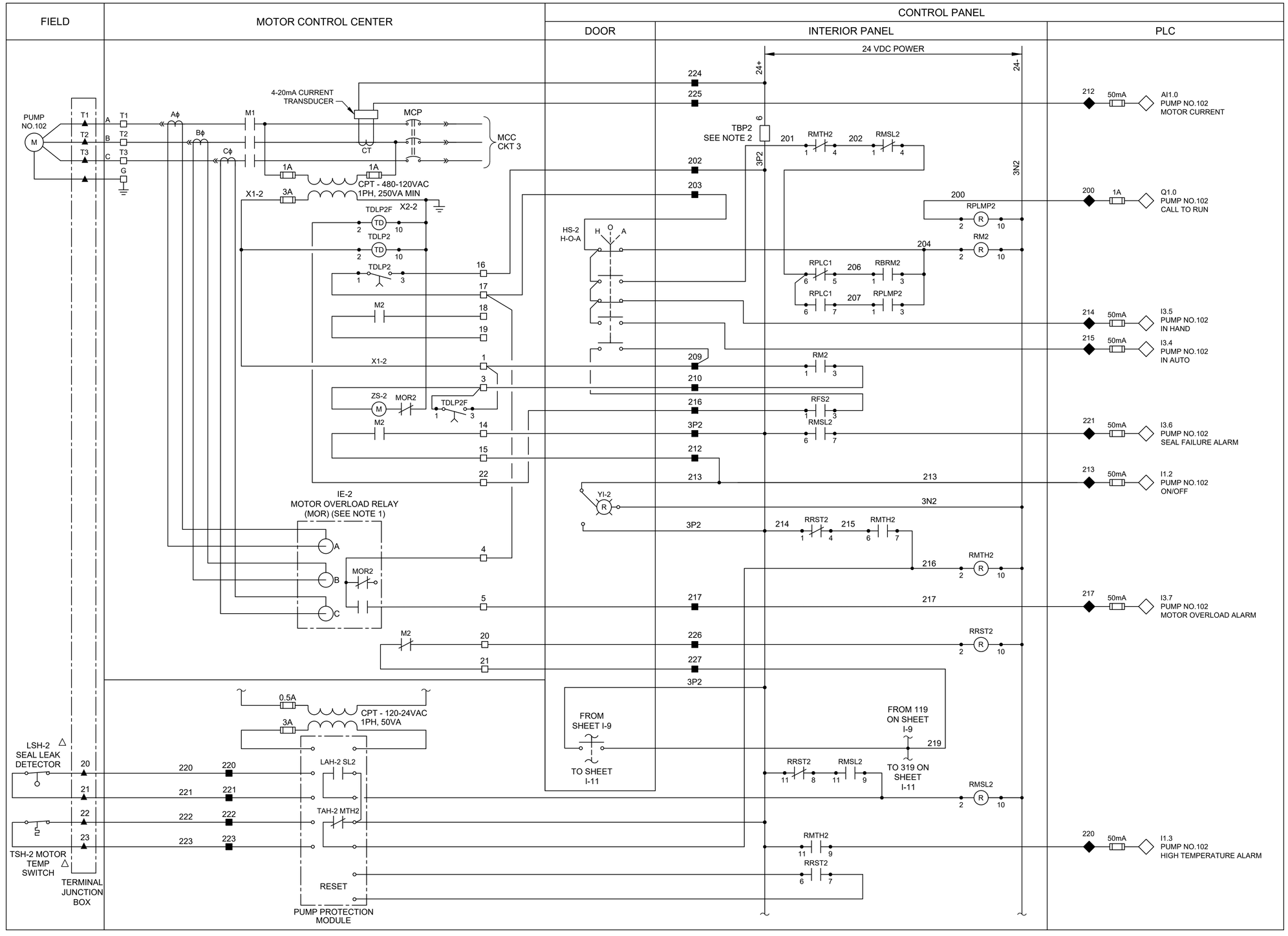

LEGEND

- △ DEVICE OR FIELD TERMINAL LOCATED AT MOTOR
- ✳ DEVICE OR FIELD TERMINAL LOCATED REMOTE
- □ DEVICE OR FIELD TERMINAL LOCATED AT MCC/POWER PANEL
- ■ FIELD TERMINAL LOCATED AT CONTROL PANEL
- ▲ REMOTE TERMINAL
- ● DEVICE TERMINAL NO.
- ◆ PLC INTERFACE TERMINAL

NOTES:

1. MOTOR OVERLOAD RELAY OUTPUT CONTACT SHOWN NORMALLY CLOSED WHEN RELAY IS DE-ENERGIZED, OPEN WHEN ENERGIZED, AND CLOSED WHEN IN ALARM. VERIFY OPERATION OF RELAY PROVIDED AND ADJUST CONNECTION OF RMOR AUXILIARY RELAYS.
2. FUSED TERMINAL ON TERMINAL BLOCK TB4 SEE CONTROL POWER AND COMMUNICATION WIRING DIAGRAM DRAWING NO. E-10.
3. ALL FLOAT CONTROL CIRCUIT WIRES COLOR SHALL BE YELLOW.

GAI
Gupta & Associates, Inc.
CONSULTING ENGINEERING
Registration No. F-2593
302 Dennis St.,
Houston, Texas 77006
Tel: 713-636-2936
Fax: 713-636-2967
email: hforouzan@gaiconsulting.com

ARCADIS
Infrastructure · Water · Environment · Buildings
1330 Post Oak Blvd, Suite 2250
Houston, TX 77056
Tel: 713-953-4800
Fax: 713-977-4620
www.arcadis.com
Texas Registered Engineering Firm F-533
SURVEYED BY: AMANI ENGR.
FB NO. P-6335

STATE OF TEXAS
H. A. FOROUZAN
77748
REGISTERED PROFESSIONAL ENGINEER
11/18/2025

CITY OF HOUSTON
HOUSTON PUBLIC WORKS

LIFT STATION REHABILITATION & RECONSTRUCTION CONSENT DECREE

BRETSHIRE NO.1 LIFT STATION CONTROL WIRING DIAGRAM PUMP-102

I-10

WBS NUMBER	FOR CITY OF HOUSTON USE ONLY
R-000267-0175-4	
DRAWING SCALE	
NONE	
CITY OF HOUSTON PM	
NP NAWARAJ PANTA, P.E.	
SHEET NO. 70 OF 312	

NO.	DATE	REVISION	APP.

FILE PATH: O:\H8103_Houston Lift Station Removal And Replacement (CMAR)\6 Drawings\Instrumentation And Control\Working\Bretshire No.1\Bretshire No.1_I-10.dwg
PLOT STYLE: GAI.ctb PLOTTED: 11/21/2025 9:47 PM

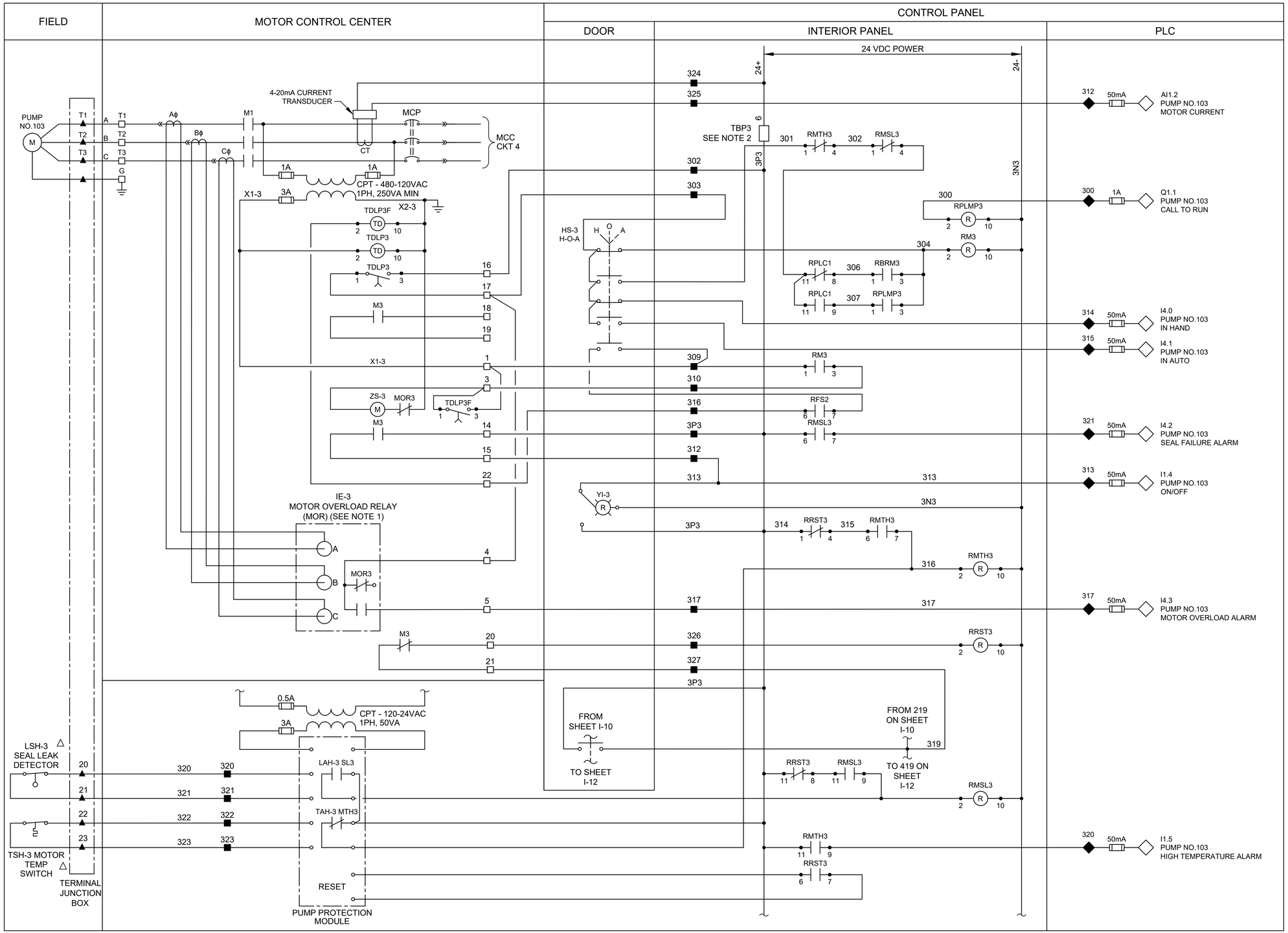

LEGEND

- △ DEVICE OR FIELD TERMINAL LOCATED AT MOTOR
- ✳ DEVICE OR FIELD TERMINAL LOCATED REMOTE
- □ DEVICE OR FIELD TERMINAL LOCATED AT MCC/POWER PANEL
- ■ FIELD TERMINAL LOCATED AT CONTROL PANEL
- ▲ REMOTE TERMINAL
- ● DEVICE TERMINAL NO.
- ◆ PLC INTERFACE TERMINAL

NOTES:

1. MOTOR OVERLOAD RELAY OUTPUT CONTACT SHOWN NORMALLY CLOSED WHEN RELAY IS DE-ENERGIZED, OPEN WHEN ENERGIZED, AND CLOSED WHEN IN ALARM. VERIFY OPERATION OF RELAY PROVIDED AND ADJUST CONNECTION OF RMOR AUXILIARY RELAYS.
2. FUSED TERMINAL ON TERMINAL BLOCK TB4 SEE CONTROL POWER AND COMMUNICATION WIRING DIAGRAM DRAWING NO. E-10.
3. ALL FLOAT CONTROL CIRCUIT WIRES COLOR SHALL BE YELLOW.

GAI
Gupta & Associates, Inc.
CONSULTING ENGINEERING
Registration No. F-2593
302 Dennis St., Houston, Texas 77006
Tel: 713-636-2936
Fax: 713-636-2987
email: hforouzan@gaiconsulting.com

ARCADIS
Infrastructure · Water · Environment · Buildings
1330 Post Oak Blvd, Suite 2250
Houston, TX 77056
Tel: 713-953-4800
Fax: 713-977-4620
www.arcadis.com
Texas Registered Engineering Firm F-533

SURVEYED BY: AMANI ENGR.
FB NO. P-6335

STATE OF TEXAS
H. A. FOROUZAN
77748
REGISTERED PROFESSIONAL ENGINEER
11/18/2025

CITY OF HOUSTON

HOUSTON PUBLIC WORKS

LIFT STATION REHABILITATION & RECONSTRUCTION CONSENT DECREE

BRETSHIRE NO.1 LIFT STATION CONTROL WIRING DIAGRAM PUMP-103

I-11

WBS NUMBER	FOR CITY OF HOUSTON USE ONLY
R-000267-0175-4	
DRAWING SCALE	
NONE	
CITY OF HOUSTON PM	
NP NAWARAJ PANTA, P.E.	
SHEET NO. 71 OF 312	

NO.	DATE	REVISION	APP.

FILE PATH: O:\H8103_Houston Lift Station Removal And Replacement (CMAR)\6 Drawings\Instrumentation And Control\Working\Brethshire No.1\Brethshire No.1_I-11.dwg
PLOT STYLE: GAI.ctb PLOTTED: 11/21/2025 9:47 PM

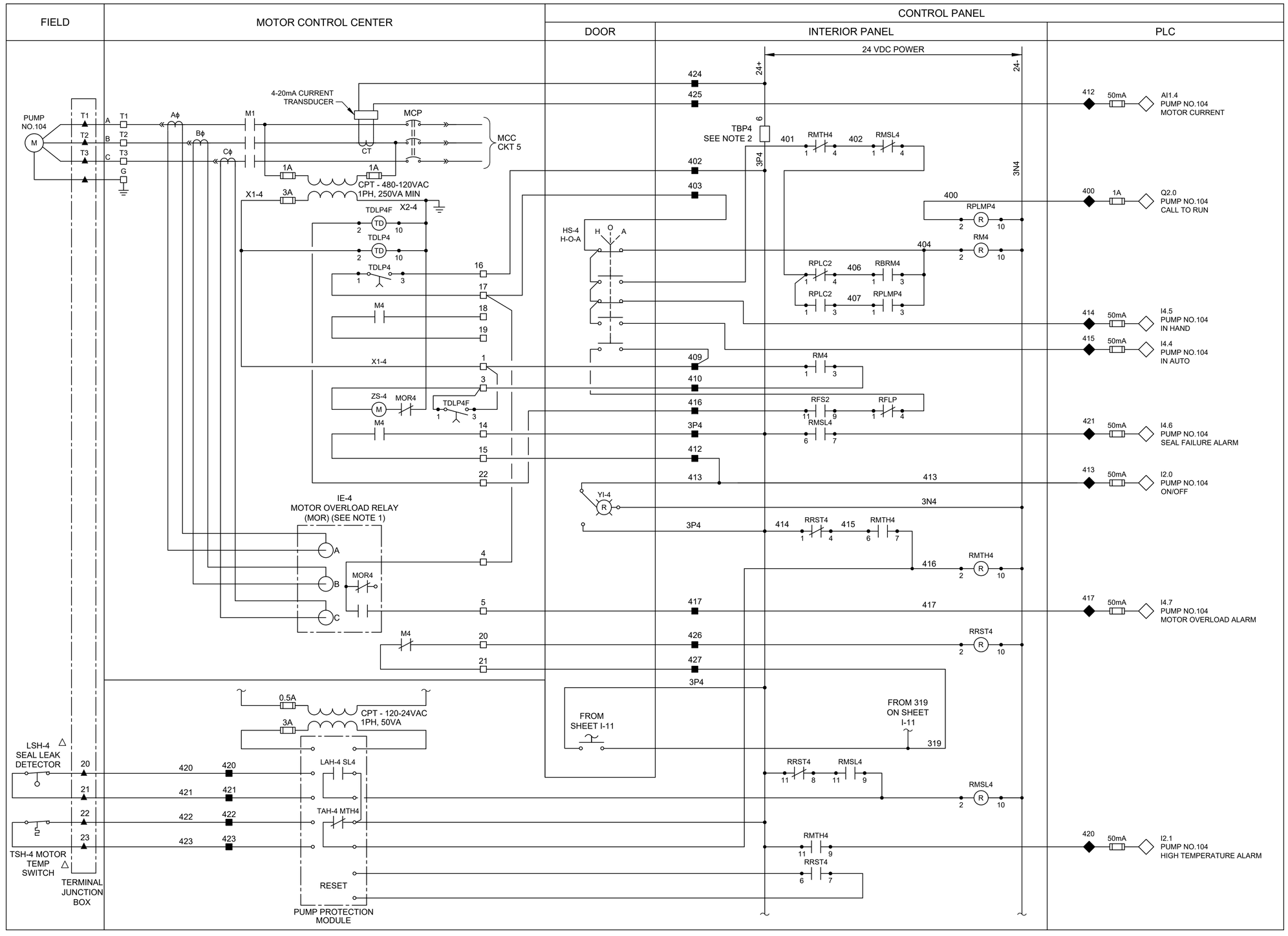

LEGEND

- △ DEVICE OR FIELD TERMINAL LOCATED AT MOTOR
- ✳ DEVICE OR FIELD TERMINAL LOCATED REMOTE
- □ DEVICE OR FIELD TERMINAL LOCATED AT MCC/POWER PANEL
- ■ FIELD TERMINAL LOCATED AT CONTROL PANEL
- ▲ REMOTE TERMINAL
- ● DEVICE TERMINAL NO.
- ◆ PLC INTERFACE TERMINAL

NOTES:

1. MOTOR OVERLOAD RELAY OUTPUT CONTACT SHOWN NORMALLY CLOSED WHEN RELAY IS DE-ENERGIZED, OPEN WHEN ENERGIZED, AND CLOSED WHEN IN ALARM. VERIFY OPERATION OF RELAY PROVIDED AND ADJUST CONNECTION OF RMOR AUXILIARY RELAYS.
2. FUSED TERMINAL ON TERMINAL BLOCK TB4 SEE CONTROL POWER AND COMMUNICATION WIRING DIAGRAM DRAWING NO. E-10.
3. ALL FLOAT CONTROL CIRCUIT WIRES COLOR SHALL BE YELLOW.

GAI
Gupta & Associates, Inc.
CONSULTING ENGINEERING
Registration No. F-2593
302 Dennis St.,
Houston, Texas 77006
Tel: 713-636-2936
Fax: 713-636-2987
email: hforouzan@gaiconsulting.com

ARCADIS
Infrastructure · Water · Environment · Buildings
1330 Post Oak Blvd, Suite 2250
Houston, TX 77056
Tel: 713-953-4800
Fax: 713-977-4620
www.arcadis.com
Texas Registered Engineering Firm F-533

SURVEYED BY: AMANI ENGR.
FB NO. P-6335

STATE OF TEXAS
H. A. FOROUZAN
77748
REGISTERED PROFESSIONAL ENGINEER
11/18/2025

CITY OF HOUSTON
HOUSTON PUBLIC WORKS

LIFT STATION REHABILITATION & RECONSTRUCTION CONSENT DECREE

BRETSHIRE NO.1 LIFT STATION CONTROL WIRING DIAGRAM PUMP-104

I-12

WBS NUMBER	FOR CITY OF HOUSTON USE ONLY
R-000267-0175-4	
DRAWING SCALE	
NONE	
CITY OF HOUSTON PM	
NP NAWARAJ PANTA, P.E.	
SHEET NO. 72 OF 312	

NO.	DATE	REVISION	APP.

FILE PATH: O:\H8103_Houston Lift Station Removal And Replacement (CMAR)\6 Drawings\Instrumentation And Control\Working\Bretshire No.1\Bretshire No.1_I-12.dwg
PLOT STYLE: GAI.ctb PLOTTED: 11/21/2025 9:48 PM

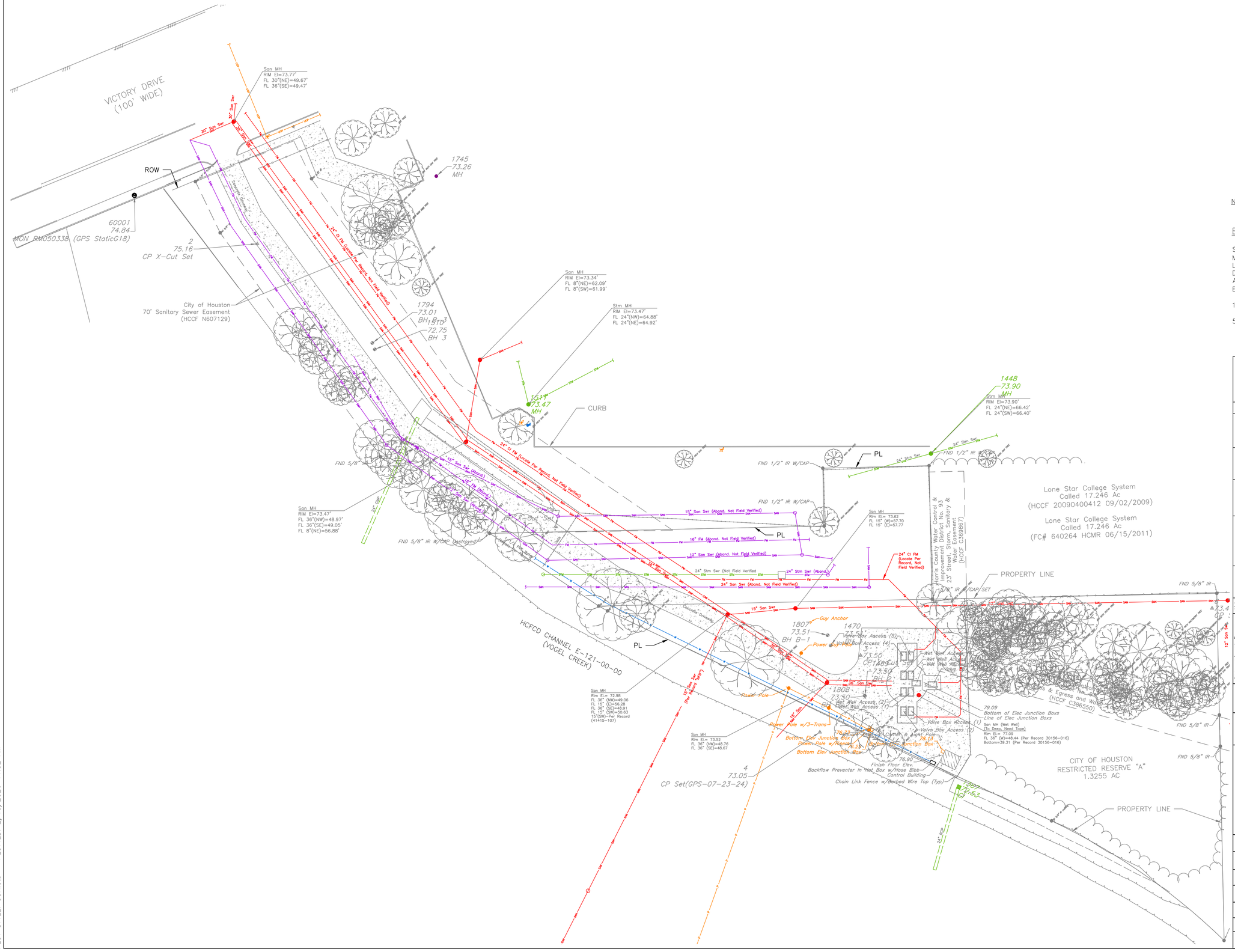

NO.	DATE	REVISION	APP.

NOTE: EXISTING WATER METER ID: 0912-3433

BENCHMARK:

STATIC GPS OBSERVATION MADE ON CITY OF HOUSTON MONUMENT 5167-7802 08/02/2024. A BRASS DISK LOCATED ON THE SOUTHSIDE OF BRIDGE ON VICTORY DRIVE, APPROXIMATELY 0.23 MILES NORTHEAST OF ANTOINE DRIVE
ELEVATION = 74.84' (NAVD 88 GEOID 18)

100 YEAR BFE = 75.3 FEET (NAVD 88, 2001 ADJ)

500 YEAR BFE = 76.0 FEET (NAVD 88, 2001 ADJ)

NOTICE:
FOR YOUR SAFETY, YOU ARE REQUIRED BY TEXAS LAW TO CALL 811 AT LEAST 48 HOURS BEFORE YOU DIG SO THAT UNDERGROUND LINES CAN BE MARKED. THIS SIGNATURE DOES NOT FULFILL YOUR OBLIGATION TO CALL 811

VERIFICATION OF PRIVATE UTILITY LINES

Mike Brower 02/17/26
Date

CenterPoint Energy natural gas utilities shown. (Gas service lines are not shown). This signature not be used for conflict verification.
Signature valid for six months.

Mike Brower 02/17/26
Date

CenterPoint Energy/UNDERGROUND Electrical Facilities Verification ONLY. (This signature verifies existing underground facilities – not to be used for conflict verification)
Signature valid for six months.

Olivia Allison 02/16/2026
Date

Approved for AT&T underground conduit facilities only.
Signature valid for one year.

ARCADIS
Infrastructure · Water · Environment · Buildings
1330 Post Oak Blvd, Suite 2250
Houston, TX 77056
Tel: 713-953-4800
Fax: 713-977-4620
www.arcadis.com
Texas Registered Engineering Firm F-533

SURVEYED BY: AMANI ENGR.
FB NO. P-6335

STATE OF TEXAS
DAVID F. RIDGWAY
105134
LICENSED
PROFESSIONAL ENGINEER
01/26/2026

CITY OF HOUSTON
HOUSTON PUBLIC WORKS

LIFT STATION REHABILITATION & RECONSTRUCTION CONSENT DECREE

CHERRY OAK LIFT STATION EXISTING SITE PLAN

C-12

WBS NUMBER	FOR CITY OF HOUSTON USE ONLY
R-000267-0175-4	
DRAWING SCALE	
AS NOTED	
CITY OF HOUSTON PM	
NP NAWARAJ PANTA, P.E.	
SHEET NO. 73 OF 312	

FILE PATH: C:\Users\omessan\DC\ACCDocs\Arcadis ACC US\AUS-30126616-Lift Station Rehab And Reconstruct CMAR\Project Files\10_WIP\30-Cherry Oaks\10T-C-Civil\C-C-12.dwg
PLOT STYLE: COH.ctb PLOTTED: 2/10/2026 11:32 AM

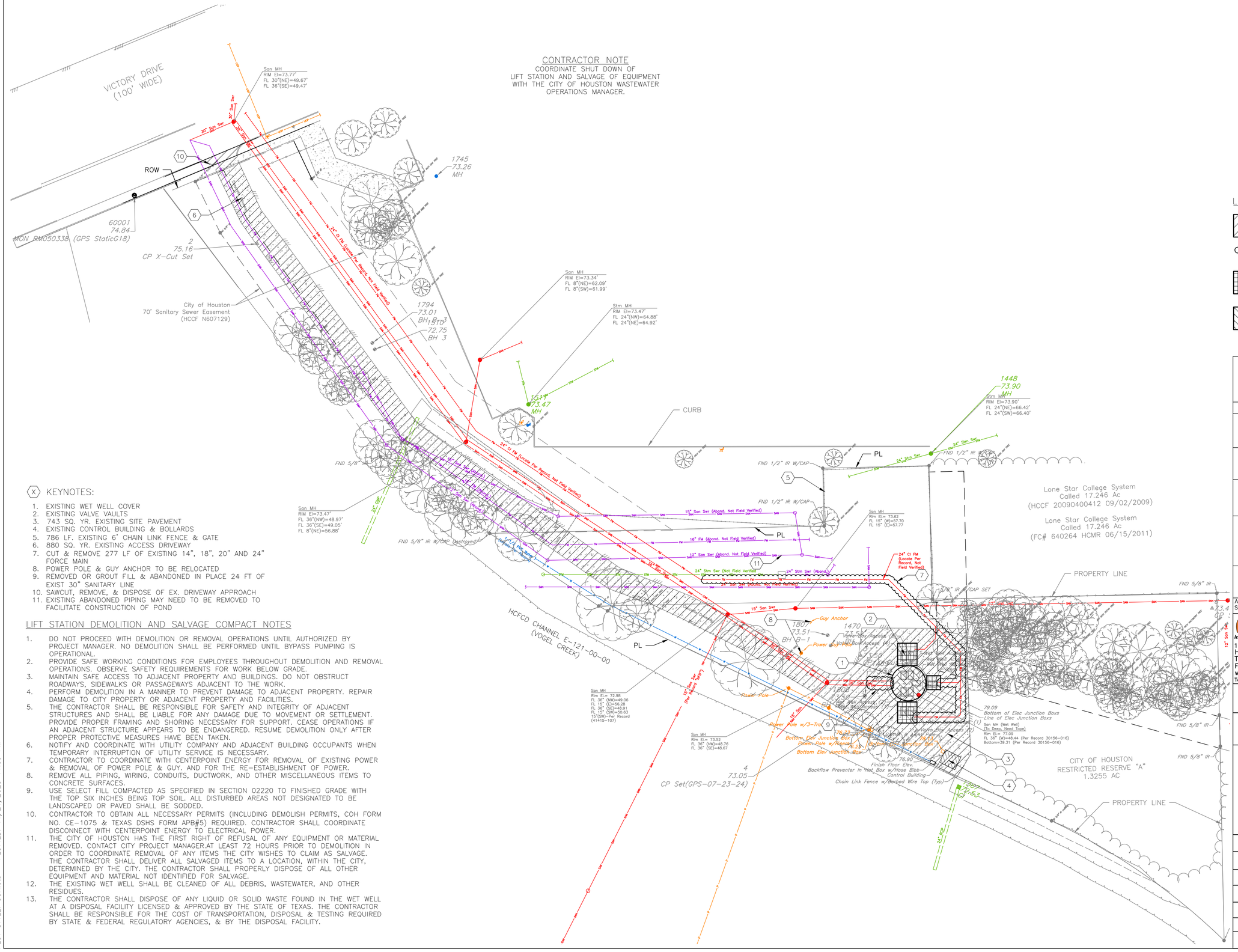
VICTORY DRIVE
(100' WIDE)
ROW
60001
74.84
MON PM050338 (GPS StaticG18)
2
75.16
CP X-Cut Set
City of Houston
70' Sanitary Sewer Easement
(HCCF N607129)
San MH
RIM El=73.77'
FL 30"(NE)=49.67'
FL 36"(SE)=49.47'
30" San Swr
24" CI FM (Locate Per Record, Not Field Verified)
1745
73.26
MH
1794
73.01
BH 1
72.75
BH 3
San MH
RIM El=73.34'
FL 8"(NE)=62.09'
FL 8"(SW)=61.99'
Stm MH
RIM El=73.47'
FL 24"(NW)=64.88'
FL 24"(NE)=64.92'
1511
73.47
MH
CURB
1448
73.90
Stm MH
RIM El=73.90'
FL 24"(NE)=66.42'
FL 24"(SW)=66.40'
24" Stm Swr
FND 1/2" IR W/CAP
FND 5/8" IR
San MH
RIM El=73.47'
FL 36"(NW)=48.97'
FL 36"(SE)=49.05'
FL 8"(NE)=56.88'
15" San Swr (Abond. Not Field Verified)
16" FM (Abond. Not Field Verified)
12" San Swr (Abond. Not Field Verified)
24" Stm Swr (Not Field Verified)
24" Stm Swr (Abond.)
24" CI FM (Locate Per Record, Not Field Verified)
FND 5/8" IR W/CAP Destroyed
HCFCD CHANNEL E-121-00-00
(VOGEL CREEK)
PL
PROPERTY LINE
Lone Star College System
Called 17.246 Ac
(HCCF 20090400412 09/02/2009)
Lone Star College System
Called 17.246 Ac
(FC# 640264 HCMR 06/15/2011)
5/8" IR W/CAP SET
Guy Anchor
1470
73.51
BH B-1
1808
73.52
BH 4
Power Pole
Power Pole w/3-Trans
Bottom Elev Junction Box
Down Pole w/Hazard
Bottom Elev Junction Box
Backflow Preventer in "Hot Box w/Hose Bibb
Control Building
Chain Link Fence w/Barbed Wire Top (Typ)
Finish Floor Elev.
76.90
Top of Wall Elev.
76.23
Top of Wall Elev.
76.23
Top of Wall Elev.
76.23

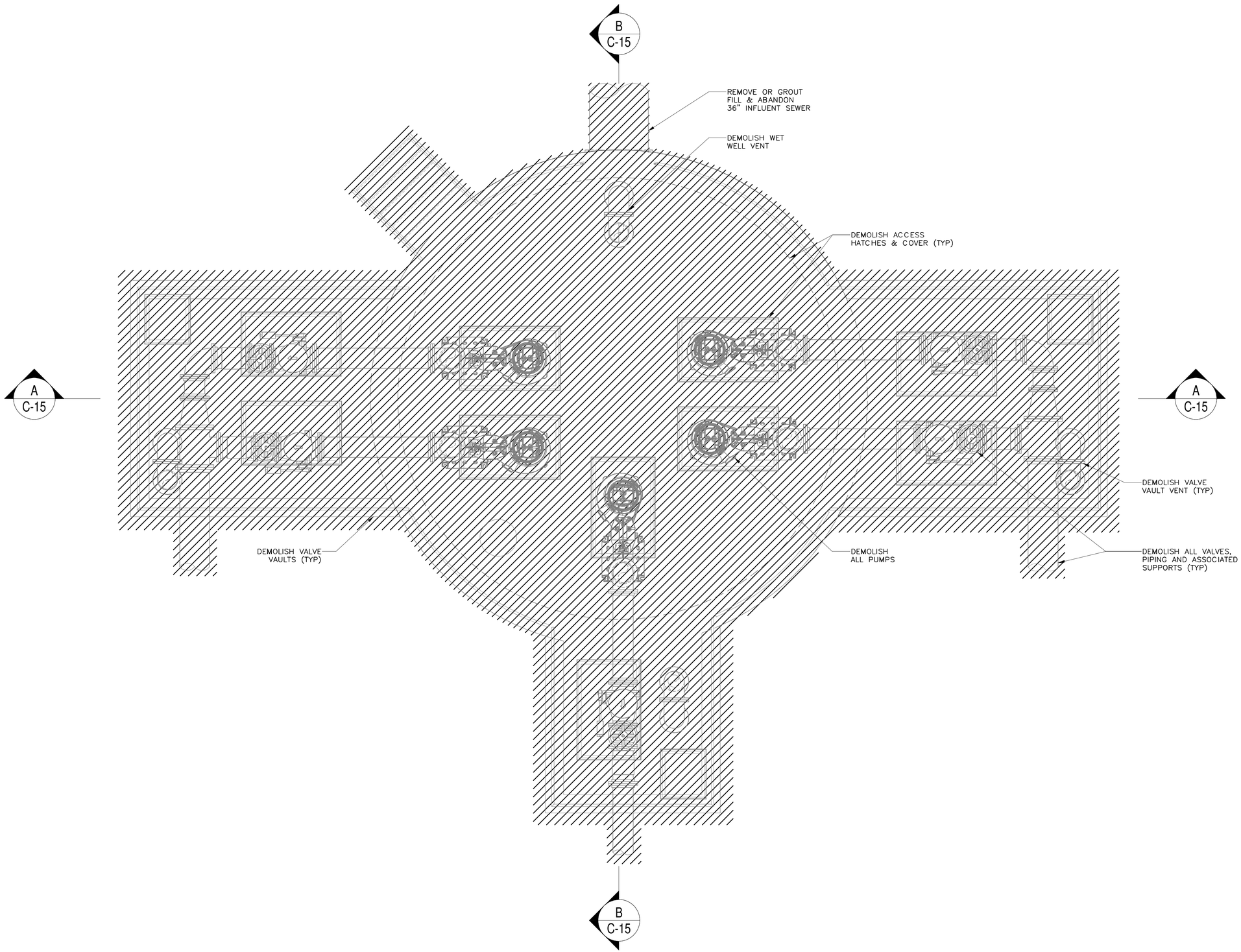

DEMOLITION PLAN

0' 2' 4' 6' SCALE: 3/8" = 1'-0"

NO.	DATE	REVISIONS	APP.

N

NOTES:

1. THE BACKGROUND OF THIS DRAWING IS BASED ON RECORD DRAWING NO. 30156 PREPARED BY DANNENBAUM ENGINEERING CORPORATION. CONTRACTOR IS RESPONSIBLE FOR VERIFYING EXISTING CONDITIONS PRIOR TO SUBMITTING BID.
2. DEMOLISH LIFT STATION CONCRETE WET WELL TOP.
3. REMOVE EXISTING COATING AND POWER WASH PRIOR TO CONSTRUCTION PER SPECIFICATION 09901, SECTION 3.03.
4. REMOVE ALL PIPING, VALVES, WIRING CONDUITS, DUCTWORK AND OTHER MISCELLANEOUS ITEMS TO CONCRETE SURFACES. SEE SHEET C-13 FOR EXTENT OF YARD PIPING DEMOLITION.
5. THE CITY OF HOUSTON HAS THE FIRST RIGHT OF REFUSAL OF ANY EQUIPMENT OR MATERIAL REMOVED. CONTACT CONSTRUCTION MANAGER AT LEAST 72 HOURS PRIOR TO DEMOLITION IN ORDER TO SALVAGED ITEMS TO A LOCATION WITHIN THE CITY. THE CONTRACTOR SHALL PROPERLY DISPOSE OF ALL OTHER MATERIAL NOT IDENTIFIED FOR SALVAGE
6. THE EXISTING WET WELL SHALL BE CLEANED OF ALL DEBRIS, WASTEWATER DEMOLITION WASTE AND OTHER RESIDUES BY CERTIFIED APPROVED CITY OF HOUSTON DISPOSAL CONTRACTOR.
7. CONTRACTOR SHALL OBTAIN CITY OF HOUSTON DEMOLITION PERMIT OR SUBMIT PROOF OF NON-APPLICABILITY TO COH CONSTRUCTION PROJECT MANAGER PRIOR TO THE STARTUP OR DEMOLITION ACTIVITIES AT THE SITE.
8. DEMOLISH LIFT STATION CONCRETE VALVE VAULT.

LEGEND:

TO BE DEMOLISHED

ARCADIS
Infrastructure. Water. Environment. Buildings
1330 Post Oak Blvd, Suite
2250 Houston, TX 77056
Tel: 713-953-4800
Fax: 713-977-4620
www.arcadis.com
Texas Registered Engineering Firm F-533

SURVEYED BY: AMANI ENGR.

FB NO. P-6335

STATE OF TEXAS
DAVID F. RIDGWAY
105134
LICENSED
PROFESSIONAL ENGINEER
11/20/2025

CITY OF HOUSTON

HOUSTON PUBLIC WORKS

LIFT STATION REHABILITATION & RECONSTRUCTION
CONSENT DECREE

CHERRY OAK LIFT STATION
WET WELL
DEMOLITION PLAN

C-14

WBS NUMBER	FOR CITY OF HOUSTON USE ONLY
R-000267-0175-4	
DRAWING SCALE	
As indicated	
CITY OF HOUSTON PM	
NP NAWARAJ PANTA, P.E	
SHEET NO 75 OF 312	

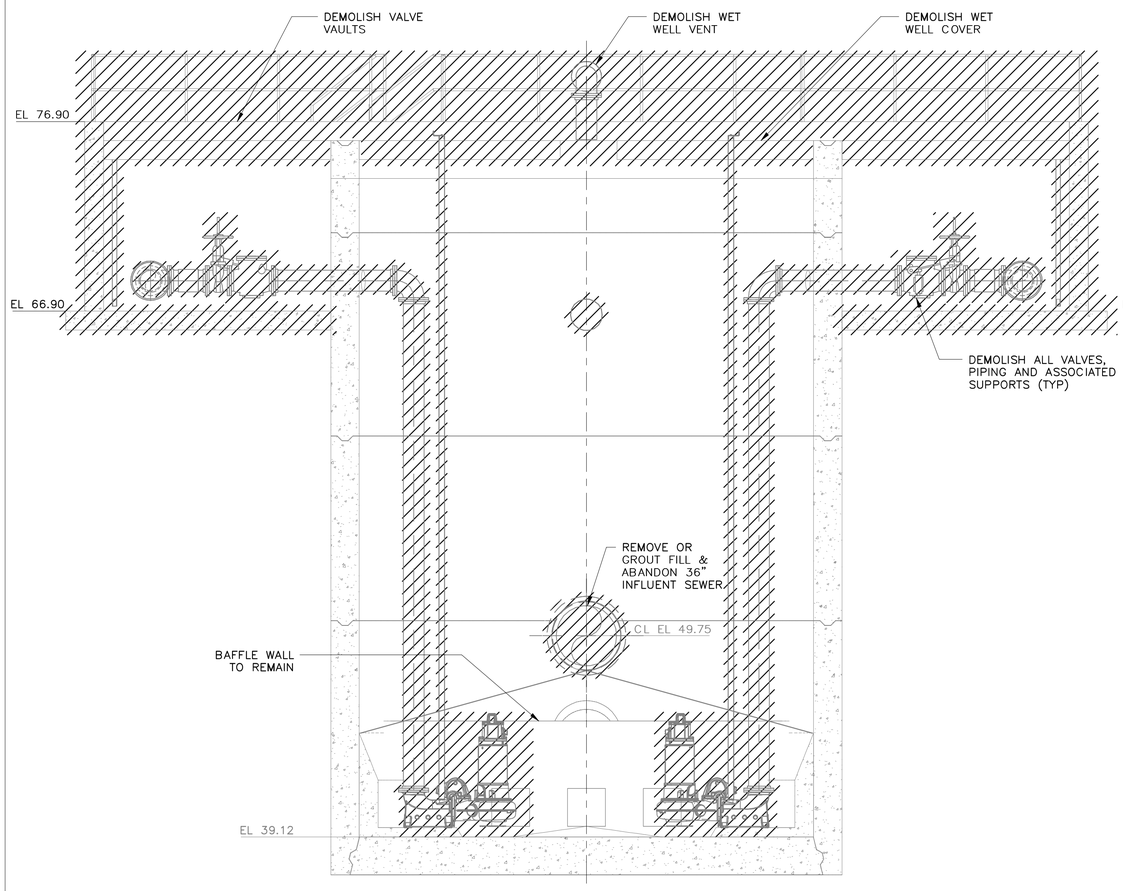

A SECTION

0' 2' 4' 8' SCALE: 1/4" = 1'-0"

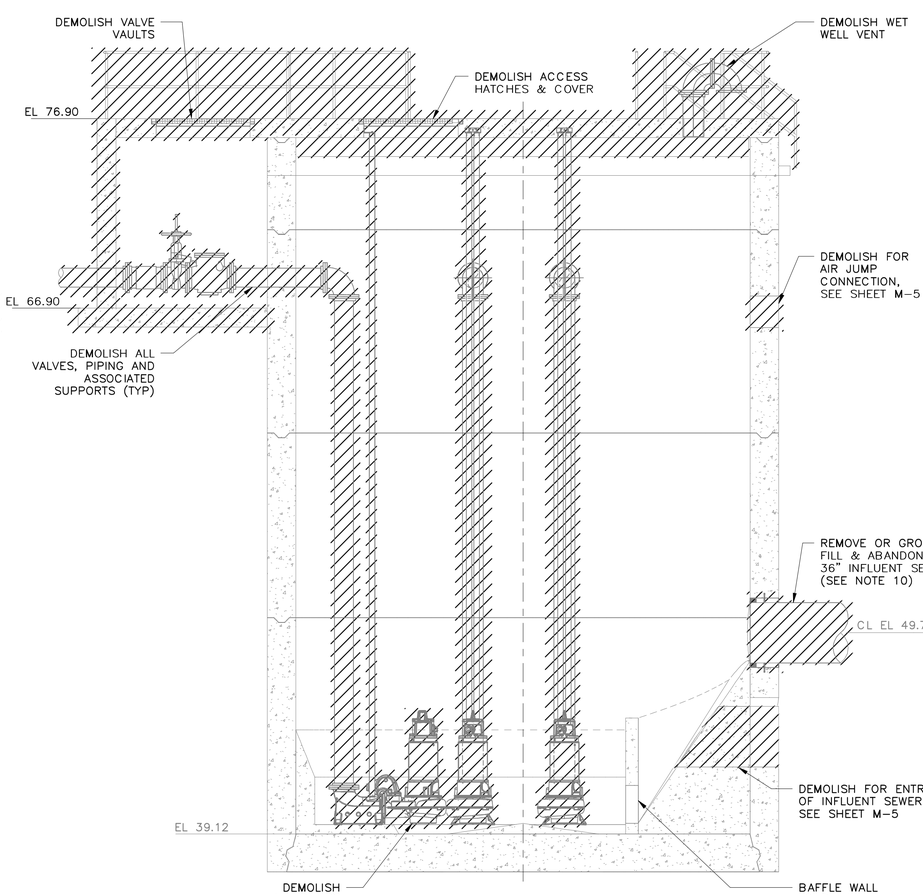

B SECTION

0' 2' 4' 8' SCALE: 1/4" = 1'-0"

NOTES:

1. THE BACKGROUND OF THIS DRAWING IS BASED ON RECORD DRAWING NO. 30156 PREPARED BY DANNENBAUM ENGINEERING CORPORATION. CONTRACTOR IS RESPONSIBLE FOR VERIFYING EXISTING CONDITIONS PRIOR TO SUBMITTING BID.
2. DEMOLISH LIFT STATION CONCRETE WET WELL TOP.
3. DEMOLISH LIFT STATION CONCRETE VALVE VAULT.
4. REMOVE EXISTING COATING/LINING AND POWER WASH PRIOR TO CONSTRUCTION PER SPECIFICATION 09901, SECTION 3.03.
5. REMOVE ALL PIPING, WIRING CONDUITS, DUCTWORK AND OTHER MISCELLANEOUS ITEMS TO CONCRETE SURFACES.
6. THE CITY OF HOUSTON HAS THE FIRST RIGHT OF REFUSAL OF ANY EQUIPMENT OR MATERIAL REMOVED. CONTACT CONSTRUCTION MANAGER AT LEAST 72 HOURS PRIOR TO DEMOLITION IN ORDER TO COORDINATE REMOVAL OF ANY ITEMS THE CITY WISHES TO CLAIM AS SALVAGED ITEMS TO A LOCATION WITHIN THE CITY. THE CONTRACTOR SHALL PROPERLY DISPOSE OF ALL OTHER MATERIAL NOT IDENTIFIED FOR SALVAGE.
7. THE EXISTING WET WELL SHALL BE CLEANED OF ALL DEBRIS, WASTEWATER DEMOLITION WASTE AND OTHER RESIDUES BY CERTIFIED APPROVED CITY OF HOUSTON DISPOSAL CONTRACTOR.
8. CONTRACTOR SHALL OBTAIN CITY OF HOUSTON DEMOLITION PERMIT OR SUBMIT PROOF OF NON-APPLICABILITY TO COH CONSTRUCTION PROJECT MANAGER PRIOR TO THE STARTUP OR DEMOLITION ACTIVITIES AT THE SITE.
9. REMOVE AND SALVAGE ALL LADDERS, STAIRS, GRATING, PIPING PUMPS, MOTORS, VENTS, MECHANICAL, ELECTRICAL AND INSTRUMENTATION EQUIPMENT.
10. SEE SHEET C-13 FOR CONTINUATION OF INFLUENT SEWER PIPE.

LEGEND:

TO BE DEMOLISHED

NO.	DATE	REVISIONS	APP.

ARCADIS
Infrastructure. Water. Environment. Buildings
1330 Post Oak Blvd, Suite 2250 Houston, TX 77056
Tel: 713-953-4800
Fax: 713-977-4620
www.arcadis.com
Texas Registered Engineering Firm F-533

SURVEYED BY: AMANI ENGR.

FB NO. P-6335

STATE OF TEXAS
DAVID F. RIDGWAY
105134
LICENSED
PROFESSIONAL ENGINEER
11/20/2025

CITY OF HOUSTON

HOUSTON PUBLIC WORKS

LIFT STATION REHABILITATION & RECONSTRUCTION
CONSENT DECREE

CHERRY OAK LIFT STATION
WET WELL
DEMOLITION SECTIONS

C-15

WBS NUMBER	FOR CITY OF HOUSTON USE ONLY
R-000267-0175-4	
DRAWING SCALE	
As indicated	
CITY OF HOUSTON PM	
NP NAWARAJ PANTA, P.E	
SHEET NO 76 OF 312	

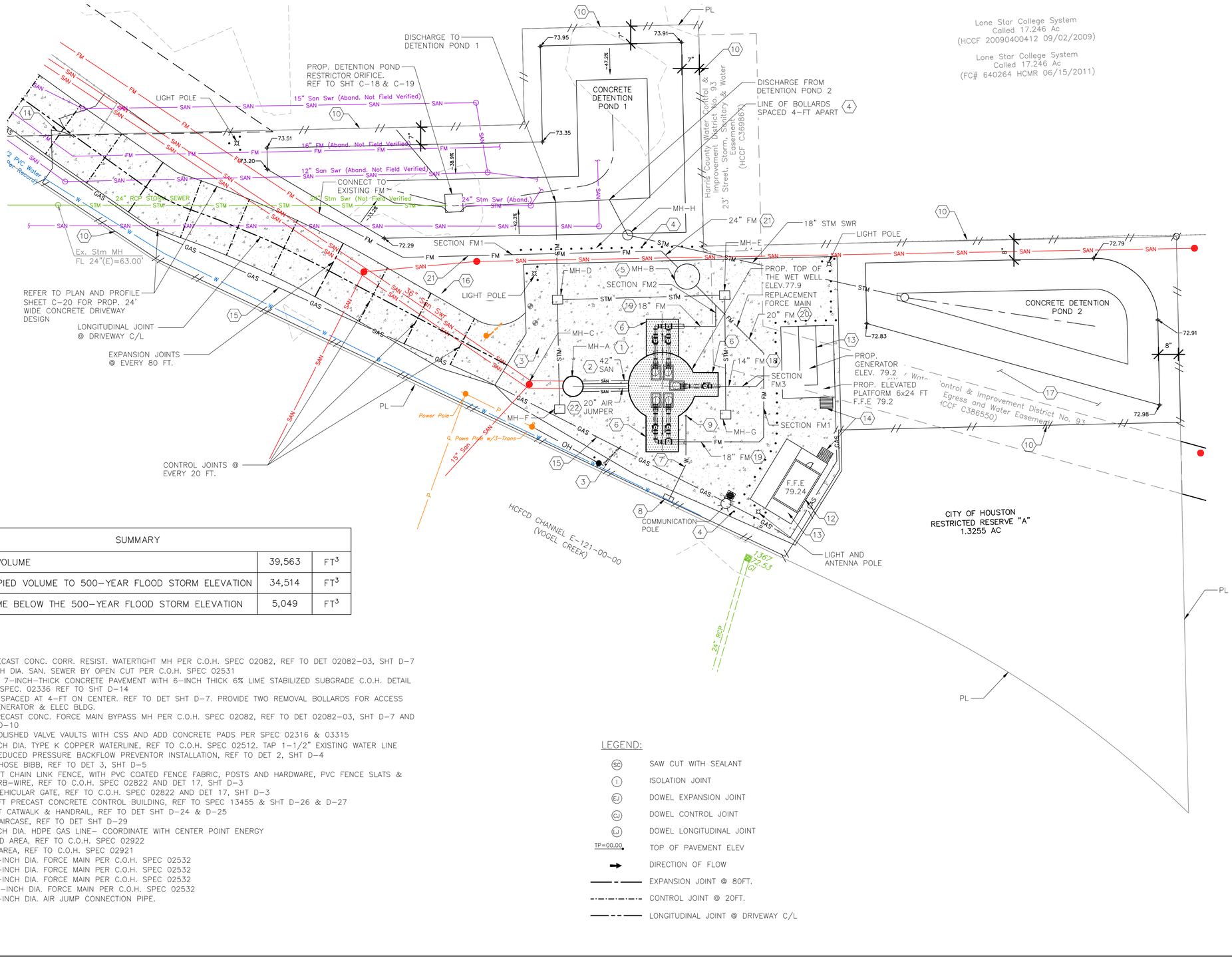

SUMMARY		
OVERALL CUT VOLUME	39,563	FT^3
OVERALL OCCUPIED VOLUME TO 500-YEAR FLOOD STORM ELEVATION	34,514	FT^3
NET CUT VOLUME BELOW THE 500-YEAR FLOOD STORM ELEVATION	5,049	FT^3

(X) KEYNOTES

1. 8-FT DIA. PRECAST CONC. CORR. RESIST. WATERTIGHT MH PER C.O.H. SPEC 02082, REF TO DET 02082-03, SHT D-7
2. 28 LF 42-INCH DIA. SAN. SEWER BY OPEN CUT PER C.O.H. SPEC 02531
3. 1,172 SQ. YD. 7-INCH-THICK CONCRETE PAVEMENT WITH 6-INCH THICK 6% LIME STABILIZED SUBGRADE C.O.H. DETAIL 02751-01 & SPEC. 02336 REF TO SHT D-14
4. 65 BOLLARDS SPACED AT 4-FT ON CENTER. REF TO DET SHT D-7. PROVIDE TWO REMOVAL BOLLARDS FOR ACCESS TO PONDS, GENERATOR & ELEC BLDG.
5. 10-FT DIA. PRECAST CONC. FORCE MAIN BYPASS MH PER C.O.H. SPEC 02082, REF TO DET 02082-03, SHT D-7 AND DET 01, SHT D-10
6. BACKFILL DEMOLISHED VALVE VAULTS WITH CSS AND ADD CONCRETE PADS PER SPEC 02316 & 03315
7. 38 LF.3/4-INCH DIA. TYPE K COPPER WATERLINE, REF TO C.O.H. SPEC 02512. TAP 1-1/2" EXISTING WATER LINE
8. OPEN CAGE REDUCED PRESSURE BACKFLOW PREVENTOR INSTALLATION, REF TO DET 2, SHT D-4
9. NON-FREEZE HOSE BIBB, REF TO DET 3, SHT D-5
10. 1,168 LF. 6-FT CHAIN LINK FENCE, WITH PVC COATED FENCE FABRIC, POSTS AND HARDWARE, PVC FENCE SLATS & 3-STRAND BARB-WIRE, REF TO C.O.H. SPEC 02822 AND DET 17, SHT D-3
11. 20-FT WIDE VEHICULAR GATE, REF TO C.O.H. SPEC 02822 AND DET 17, SHT D-3
12. 12-FT X 18-FT PRECAST CONCRETE CONTROL BUILDING, REF TO SPEC 13455 & SHT D-26 & D-27
13. 7-FT X 28-FT CATWALK & HANDRAIL, REF TO DET SHT D-24 & D-25
14. 5-FT WIDE STAIRCASE, REF TO DET SHT D-29
15. 736 LF. 2-INCH DIA. HDPE GAS LINE- COORDINATE WITH CENTER POINT ENERGY
16. SOD DISTURBED AREA, REF TO C.O.H. SPEC 02922
17. HYDROMULCH AREA, REF TO C.O.H. SPEC 02921
18. 21 LF OF 14-INCH DIA. FORCE MAIN PER C.O.H. SPEC 02532
19. 77 LF OF 18-INCH DIA. FORCE MAIN PER C.O.H. SPEC 02532
20. 36 LF OF 20-INCH DIA. FORCE MAIN PER C.O.H. SPEC 02532
21. 183 LF OF 24-INCH DIA. FORCE MAIN PER C.O.H. SPEC 02532
22. 28 LF OF 20-INCH DIA. AIR JUMP CONNECTION PIPE.

LEGEND:

- (SC) SAW CUT WITH SEALANT
- (I) ISOLATION JOINT
- (EJ) DOWEL EXPANSION JOINT
- (CJ) DOWEL CONTROL JOINT
- (LJ) DOWEL LONGITUDINAL JOINT
- TP=00.00 TOP OF PAVEMENT ELEV
- DIRECTION OF FLOW
- EXPANSION JOINT @ 80FT.
- CONTROL JOINT @ 20FT.
- LONGITUDINAL JOINT @ DRIVEWAY C/L

N

0' 10' 20' 40'

HORIZ. 1"=20'

NO.	DATE	REVISION	APP.

NOTES:

1. CONTRACTOR TO REMOVE EXISTING PAVEMENT, LEVEL UPGRADE, FILL WITH TOP SOIL AND SOD WITH GRASS, ENTIRE AREA DISTURBED DURING CONSTRUCTION.
2. EXISTING UTILITY LOCATIONS WERE DEVELOPED FROM BEST INFORMATION AVAILABLE. CONTRACTOR IS TO FIELD VERIFY EXISTING UTILITY LOCATIONS PRIOR TO EXCAVATION. ALL SHOP DRAWINGS USE TO HAVE FIELD VERIFIED FACILITY, STRUCTURAL, AND UTILITY LOCATION INDICATED.
3. SEE DETAIL AND STRUCTURAL DRAWINGS FOR DIMENSIONS AND IN FORMATION NOT SHOWN.
4. REFER TO ELECTRICAL SHEETS FOR LIGHT LOCATIONS
5. REFER TO ENVIRONMENTAL SITE ASSESSMENT REPORT FOR APPROXIMATE LOCATION AND SPECIAL HANDLING OR DISPOSAL OF PPCA.

NOTICE:
FOR YOUR SAFETY, YOU ARE REQUIRED BY TEXAS LAW TO CALL 811 AT LEAST 48 HOURS BEFORE YOU DIG SO THAT UNDERGROUND LINES CAN BE MARKED. THIS SIGNATURE DOES NOT FULFILL YOUR OBLIGATION TO CALL 811

VERIFICATION OF PRIVATE UTILITY LINES

Mike Brower 03/25/26
Date

CenterPoint Energy natural gas utilities shown. (Gas service lines are not shown). This signature not be used for conflict verification.

Signature valid for six months.

Mike Brower 03/25/26
Date

CenterPoint Energy/UNDERGROUND Electrical Facilities Verification ONLY. (This signature verifies existing underground facilities – not to be used for conflict verification)

Signature valid for six months.

Chris Primrose 3/25/26
Date

Approved for AT&T underground conduit facilities only.
Signature valid for one year.

ARCADIS
Infrastructure · Water · Environment · Buildings
1330 Post Oak Blvd, Suite 2250
Houston, TX 77056
Tel: 713-953-4800
Fax: 713-977-4620
www.arcadis.com
Texas Registered Engineering Firm F-533

SURVEYED BY: AMANI ENGR.
FB NO. P-6335

STATE OF TEXAS · DAVID F. RIDGWAY · 105134 · LICENSED PROFESSIONAL ENGINEER · 02/12/2026

CITY OF HOUSTON
HOUSTON PUBLIC WORKS

LIFT STATION REHABILITATION & RECONSTRUCTION CONSENT DECREE

CHERRY OAK LIFT STATION SITE PLAN

C-16

WBS NUMBER	FOR CITY OF HOUSTON USE ONLY
R-000267-0175-4	
DRAWING SCALE	
AS NOTED	
CITY OF HOUSTON PM	
NP NAWARAJ PANTA, P.E.	
SHEET NO. 77 OF 312	

FILE PATH: C:\Users\CPI00880\DC\ACCDocs\Arcadis ACC US\AUS-30126616-Lift Station Rehab And Reconstruct CMAR\Project Files\10_WIP\30-Cherry Oaks\10T-C-Civil\C-C-16.dwg
PLOT STYLE: Coh_ctb_23BOOTEb 3/13/2026 7:44 PM

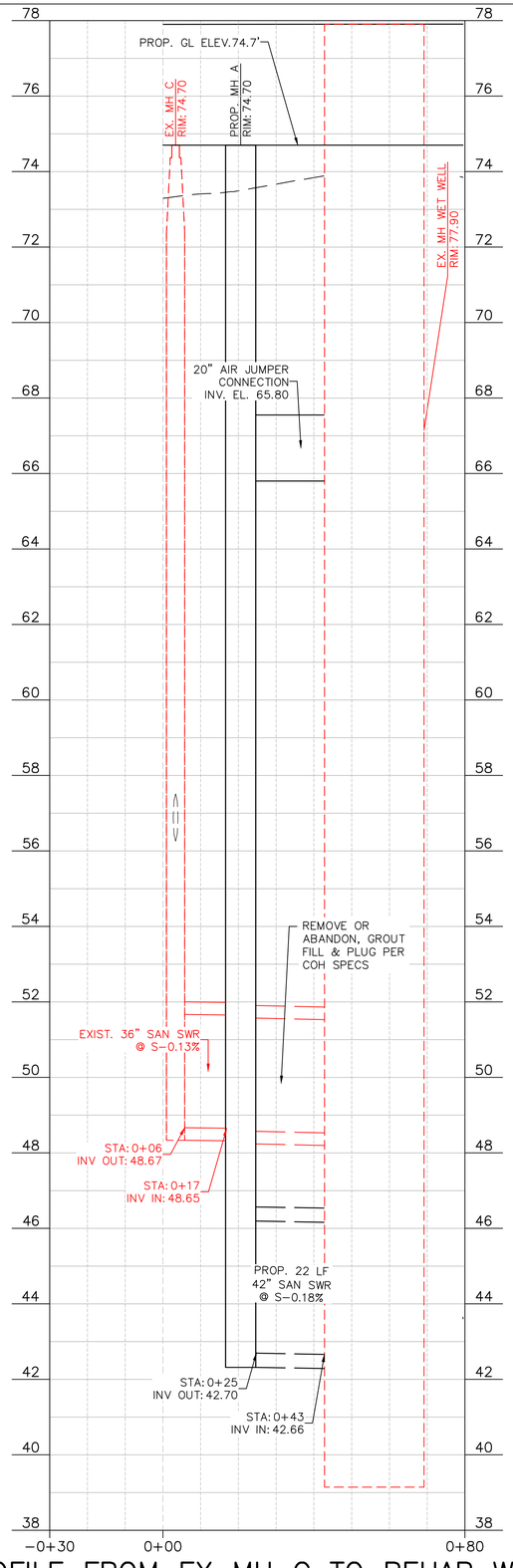

PROFILE FROM EX MH C TO REHAB WET WELL

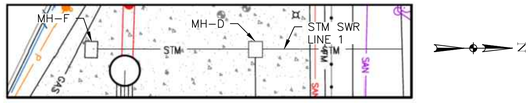

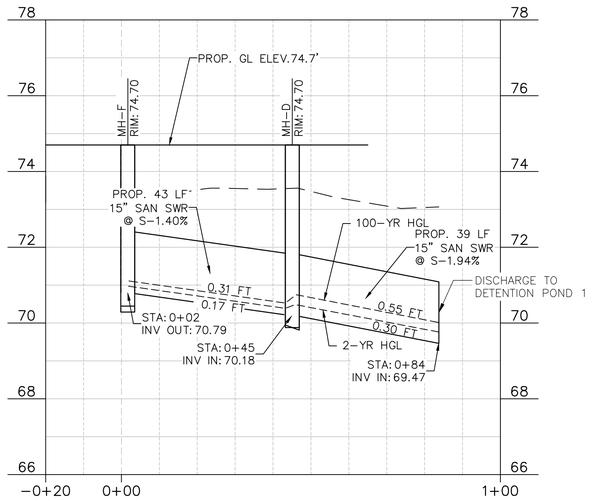

STM SEWER LINE 1

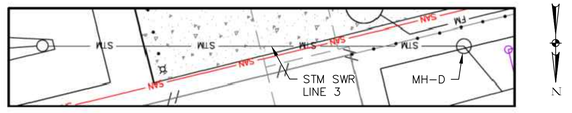

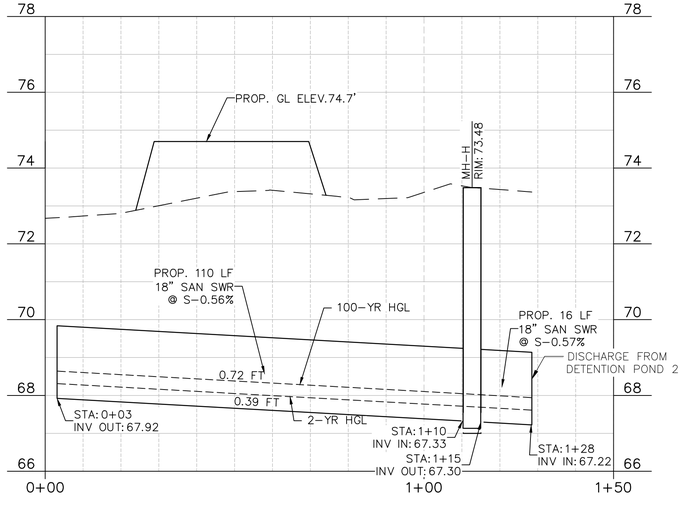

STM SEWER LINE 3

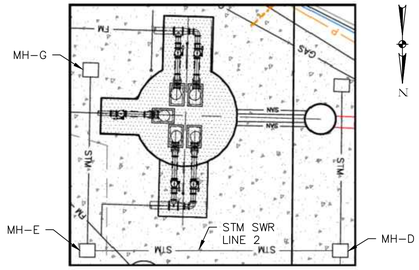

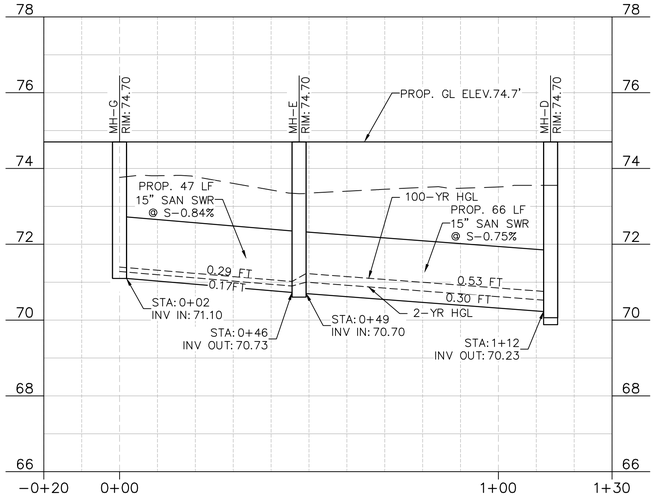

STM SEWER LINE 2

0 10' 20' 40'
HORZ. 1"=20'

0 2' 4'
VERT. 1"=2'

NO.	DATE	REVISION	APP.

NOTICE:
FOR YOUR SAFETY, YOU ARE REQUIRED BY TEXAS LAW TO CALL 811 AT LEAST 48 HOURS BEFORE YOU DIG SO THAT UNDERGROUND LINES CAN BE MARKED. THIS SIGNATURE DOES NOT FULFILL YOUR OBLIGATION TO CALL 811

VERIFICATION OF PRIVATE UTILITY LINES

Mike Brower — 02/17/26
Date

CenterPoint Energy natural gas utilities shown. (Gas service lines are not shown). This signature not be used for conflict verification.
Signature valid for six months.

Mike Brower — 02/17/26
Date

CenterPoint Energy/UNDERGROUND Electrical Facilities Verification ONLY. (This signature verifies existing underground facilities – not to be used for conflict verification)
Signature valid for six months.

Corina Allison — 02/18/2026
Date

Approved for AT&T underground conduit facilities only. Signature valid for one year.

ARCADIS
Infrastructure · Water · Environment · Buildings
1330 Post Oak Blvd, Suite 2250
Houston, TX 77056
Tel: 713-953-4800
Fax: 713-977-4620
www.arcadis.com
Texas Registered Engineering Firm F-533

SURVEYED BY: AMANI ENGR.
FB NO. P-6335

STATE OF TEXAS
DAVID F. RIDGWAY
105134
LICENSED
PROFESSIONAL ENGINEER
01/16/2026

CITY OF HOUSTON
HOUSTON PUBLIC WORKS

LIFT STATION REHABILITATION & RECONSTRUCTION CONSENT DECREE

CHERRY OAK LIFT STATION YARD PIPING PROFILE

C-17

WBS NUMBER	FOR CITY OF HOUSTON USE ONLY
R-000267-0175-4	
DRAWING SCALE	
AS NOTED	
CITY OF HOUSTON PM	
NP NAWARAJ PANTA, P.E.	
SHEET NO. 78 OF 312	

FILE PATH: C:\Users\ampueroc4886\DC\ACCDocs\Arcadis ACC US\AUS-30126616-Lift Station Rehab And Reconstruct CMAR\Project Files\10_WIP\30-Cherry Oaks\10T-C-Civil\C.C-17.dwg
PLOT STYLE: COH.ctb PLOTTED: 1/15/2026 2:55 PM

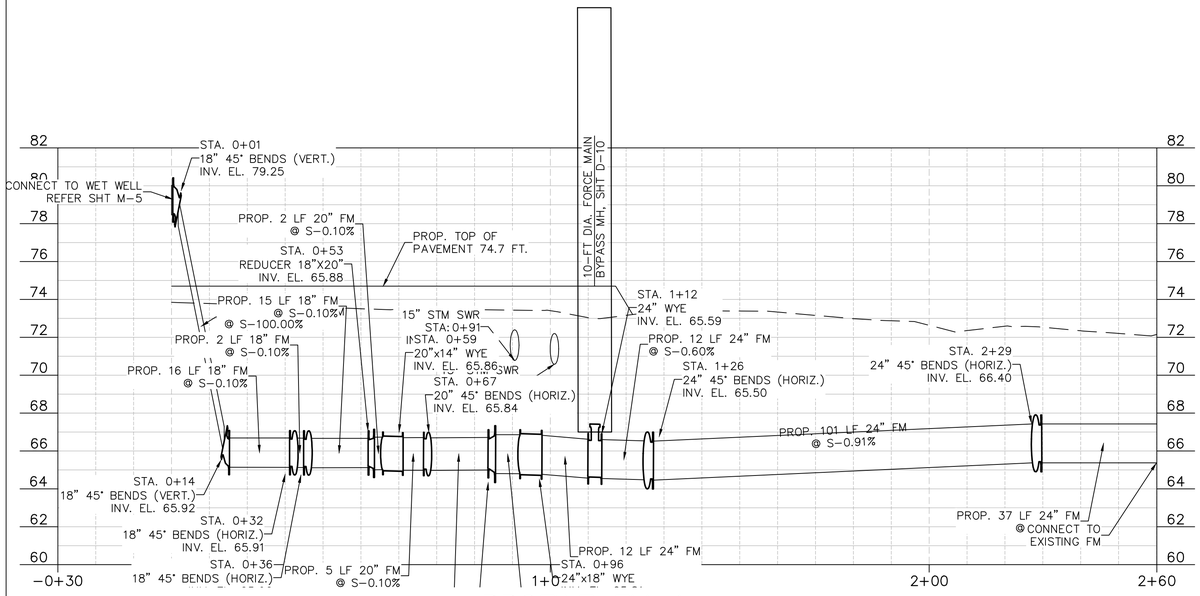

PROFILE FM 1

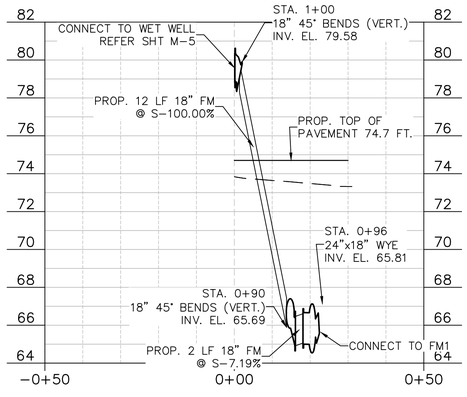

PROFILE FM 2

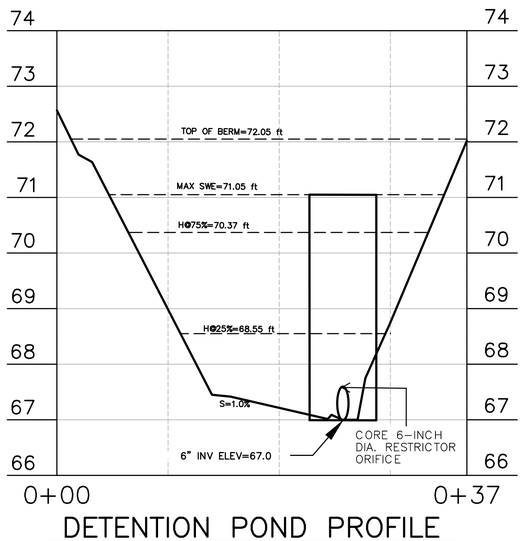

DETENTION POND PROFILE

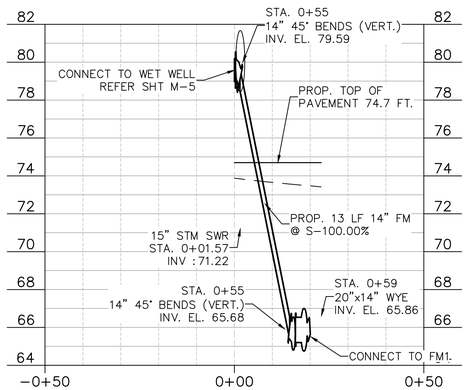

PROFILE FM 3

NO.	DATE	REVISION	APP.

NOTICE:
FOR YOUR SAFETY, YOU ARE REQUIRED BY TEXAS LAW TO CALL 811 AT LEAST 48 HOURS BEFORE YOU DIG SO THAT UNDERGROUND LINES CAN BE MARKED. THIS SIGNATURE DOES NOT FULFILL YOUR OBLIGATION TO CALL 811

VERIFICATION OF PRIVATE UTILITY LINES

Mike Brower — 03/25/26
Date

CenterPoint Energy natural gas utilities shown. (Gas service lines are not shown). This signature not be used for conflict verification.
Signature valid for six months.

Mike Brower — 03/25/26
Date

CenterPoint Energy/UNDERGROUND Electrical Facilities Verification ONLY. (This signature verifies existing underground facilities – not to be used for conflict verification)
Signature valid for six months.

Chris Primrose — 3/25/26
Date

Approved for AT&T underground conduit facilities only.
Signature valid for one year.

ARCADIS
Infrastructure · Water · Environment · Buildings
1330 Post Oak Blvd, Suite 2250
Houston, TX 77056
Tel: 713-953-4800
Fax: 713-977-4620
www.arcadis.com
Texas Registered Engineering Firm F-533

SURVEYED BY: AMANI ENGR.
FB NO. P-6335

STATE OF TEXAS
DAVID F. RIDGWAY
105134
LICENSED
PROFESSIONAL ENGINEER
01/16/2026

CITY OF HOUSTON
HOUSTON PUBLIC WORKS

LIFT STATION REHABILITATION & RECONSTRUCTION CONSENT DECREE

CHERRY OAK LIFT STATION YARD PIPING PROFILE

C-18

WBS NUMBER	FOR CITY OF HOUSTON USE ONLY
R-000267-0175-4	
DRAWING SCALE	
AS NOTED	
CITY OF HOUSTON PM	
NP NAWARAJ PANTA, P.E.	
SHEET NO. 79 OF 312	

FILE PATH: C:\Users\ampuero4886\DC\ACCDocs\Arcadis ACC US\AUS-30126616-Lift Station Rehab And Reconstruct CMAR\Project Files\10_WIP\30-Cherry Oaks\10T-C-Civil\C.C-17A.dwg
PLOT STYLE: COH.ctb PLOTTED: 1/14/2026 2:34 PM

NOTE TO OWNER:

DETENTION POND TO DRAIN WITHIN 48 HOURS AFTER STORM EVENT. MAINTENANCE OF DETENTION POND IS THE OWNER RESPONSIBILITY.

CONTRACTOR NOTE:

1. SUBMIT STRUCTURAL CONTROL BOND TO CITY OF HOUSTON STORM WATER QUALITY OFFICE PRIOR TO CONSTRUCTION. REFER TO STORM WATER QUALITY MANAGEMENT PLAN.

2. CONTACT MR. KERRYANN BILLMAN 48 HOURS PRIOR TO THE INSTALLATION OF STORM WATER QUALITY TRASH RACK AT 832-364-8859.

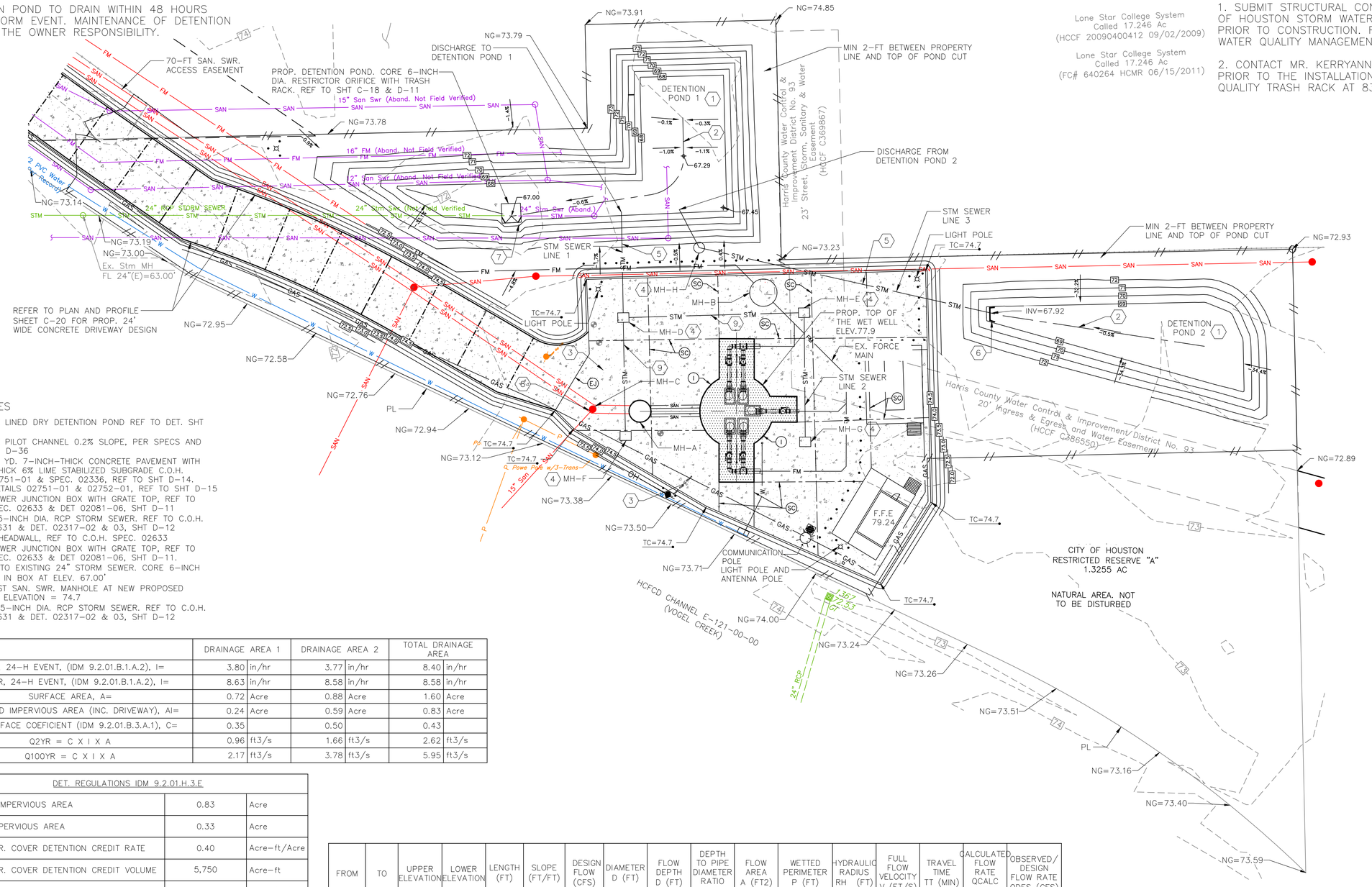

KEYNOTES

1. CONCRETE LINED DRY DETENTION POND REF TO DET. SHT D-36
2. CONCRETE PILOT CHANNEL 0.2% SLOPE, PER SPECS AND DET. SHT D-36
3. 1,172 SQ. YD. 7-INCH-THICK CONCRETE PAVEMENT WITH 6-INCH THICK 6% LIME STABILIZED SUBGRADE C.O.H. DETAIL 02751-01 & SPEC. 02336, REF TO SHT D-14. JOINTS DETAILS 02751-01 & 02752-01, REF TO SHT D-15
4. STORM SEWER JUNCTION BOX WITH GRATE TOP, REF TO C.O.H. SPEC. 02633 & DET 02081-06, SHT D-11
5. 125 LF 15-INCH DIA. RCP STORM SEWER. REF TO C.O.H. SPEC. 02631 & DET. 02317-02 & 03, SHT D-12
6. PRECAST HEADWALL, REF TO C.O.H. SPEC. 02633
7. STORM SEWER JUNCTION BOX WITH GRATE TOP, REF TO C.O.H. SPEC. 02633 & DET 02081-06, SHT D-11. CONNECT TO EXISTING 24" STORM SEWER. CORE 6-INCH DIA. HOLE IN BOX AT ELEV. 67.00'
8. RAISE EXIST SAN. SWR. MANHOLE AT NEW PROPOSED PAVEMENT ELEVATION = 74.7
9. 196 LF. 15-INCH DIA. RCP STORM SEWER. REF. TO C.O.H. SPEC. 02631 & DET. 02317-02 & 03, SHT D-12

	DRAINAGE AREA 1		DRAINAGE AREA 2		TOTAL DRAINAGE AREA	
2-YR, 24-H EVENT, (IDM 9.2.01.B.1.A.2), I=	3.80	in/hr	3.77	in/hr	8.40	in/hr
100-YR, 24-H EVENT, (IDM 9.2.01.B.1.A.2), I=	8.63	in/hr	8.58	in/hr	8.58	in/hr
SURFACE AREA, A=	0.72	Acre	0.88	Acre	1.60	Acre
PROPOSED IMPERVIOUS AREA (INC. DRIVEWAY), AI=	0.24	Acre	0.59	Acre	0.83	Acre
IMP. SURFACE COEFICIENT (IDM 9.2.01.B.3.A.1), C=	0.35		0.50		0.43	
Q2YR = C X I X A	0.96	ft3/s	1.66	ft3/s	2.62	ft3/s
Q100YR = C X I X A	2.17	ft3/s	3.78	ft3/s	5.95	ft3/s

DET. REGULATIONS IDM 9.2.01.H.3.E		
PROPOSED IMPERVIOUS AREA	0.83	Acre
EXISTING IMPERVIOUS AREA	0.33	Acre
EXIST. IMPER. COVER DETENTION CREDIT RATE	0.40	Acre-ft/Acre
EXIST. IMPER. COVER DETENTION CREDIT VOLUME	5,750	Acre-ft
PROPOSED IMPERVIOUS AREA DETENTION RATE	0.8	Acre-ft/Acre
PROPOSED IMPER. VOL= (43,560 X (0.8XA*)	28,924	ft3
VOL REQ= VT=PROPOSED VOL-CREDIT VOL	23,174	ft3
DESIGNED BASIN VOL: VB=	28,149	ft3
DISCHARGE ORIFICES IDM 9.2.01.H.4.B:		
HEAD @ 25% CAPACITY	1.55	ft3/s
HEAD @ 75% CAPACITY	3.37	ft3/s
Q= A5" X C X (2G)0.5 X (HEAD)0.5 (AT 25%)*	1.57	ft
Q= A5" X C X (2G)0.5 X (HEAD)0.5 (AT 75%)*	2.31	ft3/s
* CALCULATED WITH A 6-IN ORIFICE TO MEET COH CRITERIA		

FROM	TO	UPPER ELEVATION	LOWER ELEVATION	LENGTH (FT)	SLOPE (FT/FT)	DESIGN FLOW (CFS)	DIAMETER D (FT)	FLOW DEPTH D (FT)	DEPTH TO PIPE DIAMETER RATIO D/D	FLOW AREA A (FT2)	WETTED PERIMETER P (FT)	HYDRAULIC RADIUS RH (FT)	FULL FLOW VELOCITY V (FT/S)	TRAVEL TIME TT (MIN)	CALCULATED FLOW RATE QCALC (CFS)	OBSERVED / DESIGN FLOW RATE QDES (CFS)
2-YR																
MH-F	MH-D	70.79	70.18	43.0	0.0142	0.436	1.25	0.17	0.14	0.108	0.959	0.109	4.219	0.17	0.454	0.44
MH-D	DP	70.18	69.47	39.0	0.0182	1.090	1.25	0.30	0.24	0.226	1.280	0.177	4.780	0.14	1.082	1.09
MH-G	MH-E	71.10	70.71	47.0	0.0083	0.327	1.25	0.17	0.14	0.108	0.959	0.109	3.227	0.24	0.347	0.33
MH-E	MH-D	70.71	70.22	66.0	0.0074	0.654	1.25	0.29	0.23	0.213	1.250	0.171	3.052	0.36	0.651	0.65
DP2	MH-H	67.92	67.30	110.0	0.0056	1.090	1.50	0.39	0.26	0.365	1.605	0.227	3.003	0.61	1.097	1.09
MH-H	DP1	67.30	67.21	16.0	0.0056	1.090	1.50	0.39	0.26	0.365	1.605	0.227	3.000	0.09	1.096	1.09
100-YR																
MH-F	MH-D	70.79	70.18	43.0	0.0142	0.996	1.25	0.31	0.25	0.240	1.309	0.183	4.219	0.17	1.012	1.00
MH-D	DP	70.18	69.47	39.0	0.0182	2.490	1.25	0.55	0.44	0.520	1.813	0.287	4.780	0.14	2.485	2.49
MH-G	MH-E	71.10	70.71	47.0	0.0083	0.747	1.25	0.30	0.24	0.226	1.280	0.177	3.227	0.24	0.731	0.75
MH-E	MH-D	70.71	70.22	66.0	0.0074	1.494	1.25	0.53	0.42	0.489	1.763	0.278	3.052	0.36	1.493	1.49
DP2	MH-H	67.92	67.30	110.0	0.0056	2.490	1.50	0.72	0.48	0.839	2.296	0.365	3.003	0.61	2.518	2.49
MH-H	DP1	67.30	67.21	16.0	0.0056	2.490	1.50	0.72	0.48	0.839	2.296	0.365	3.000	0.09	2.516	2.49

NOTES:

1. CONTRACTOR TO REMOVE EXISTING PAVEMENT, LEVEL UPGRADE, FILL WITH TOP SOIL AND SOD WITH GRASS, ENTIRE AREA DISTURBED DURING CONSTRUCTION.
2. EXISTING UTILITY LOCATIONS WERE DEVELOPED FROM BEST INFORMATION AVAILABLE. CONTRACTOR IS TO FIELD VERIFY EXISTING UTILITY LOCATIONS PRIOR TO EXCAVATION. ALL SHOP DRAWINGS USE TO HAVE FIELD VERIFIED FACILITY, STRUCTURAL, AND UTILITY LOCATION INDICATED.
3. SEE DETAIL AND STRUCTURAL DRAWINGS FOR DIMENSIONS AND INFORMATION NOT SHOWN.
4. EXISTING ABANDONED PIPING MAY NEED TO BE REMOVED TO FACILITATE CONSTRUCTION OF POND.

N

0' 10' 20' 40'

HORIZ. 1"=20'

LEGEND:

- (SC) SAW CUT WITH SEALANT
- (I) ISOLATION JOINT
- (EJ) DOWEL EXPANSION JOINT
- (CJ) DOWEL CONTROL JOINT
- (LJ) DOWEL LONGITUDINAL JOINT
- TP=00.00 TOP OF PAVEMENT ELEV
- DIRECTION OF FLOW
- EXPANSION JOINT @ 80FT.
- CONTROL JOINT @ 20FT.
- LONGITUDINAL JOINT @ DRIVEWAY C/L

NO.	DATE	REVISION	APP.

NOTICE:

FOR YOUR SAFETY, YOU ARE REQUIRED BY TEXAS LAW TO CALL 811 AT LEAST 48 HOURS BEFORE YOU DIG SO THAT UNDERGROUND LINES CAN BE MARKED. THIS SIGNATURE DOES NOT FULFILL YOUR OBLIGATION TO CALL 811

VERIFICATION OF PRIVATE UTILITY LINES

Mike Brower 03/25/26
Date

CenterPoint Energy natural gas utilities shown. (Gas service lines are not shown). This signature not be used for conflict verification.

Signature valid for six months.

Mike Brower 03/25/26
Date

CenterPoint Energy/UNDERGROUND Electrical Facilities Verification ONLY. (This signature verifies existing underground facilities – not to be used for conflict verification)

Signature valid for six months.

Chris Primrose 3/25/26
Date

Approved for AT&T underground conduit facilities only.
Signature valid for one year.

ARCADIS
Infrastructure · Water · Environment · Buildings
1330 Post Oak Blvd, Suite 2250
Houston, TX 77056
Tel: 713-953-4800
Fax: 713-977-4620
www.arcadis.com
Texas Registered Engineering Firm F-533

SURVEYED BY: AMANI ENGR.
FB NO. P-6335

STATE OF TEXAS · DAVID F. RIDGWAY · 105134 · LICENSED PROFESSIONAL ENGINEER · 02/12/2026

CITY OF HOUSTON

HOUSTON PUBLIC WORKS

LIFT STATION REHABILITATION & RECONSTRUCTION CONSENT DECREE

CHERRY OAK LIFT STATION CONCRETE PAVEMENT & DRAINAGE PLAN C-19

WBS NUMBER	FOR CITY OF HOUSTON USE ONLY
R-000267-0175-4	
DRAWING SCALE	
AS NOTED	
CITY OF HOUSTON PM	
NP NAWARAJ PANTA, P.E.	
SHEET NO. 80 OF 312	

FILE PATH: C:\Users\CPI00880\DC\ACCDocs\Arcadis ACC US\AUS-30126616-Lift Station Rehab And Reconstruct CMAR\Project Files\10_WIP\30-Cherry Oaks\10T-C-Civil\C-C-19.dwg

PLOT STYLE: Coh_ctb_23B0DFtb 3/13/2026 7:39 PM

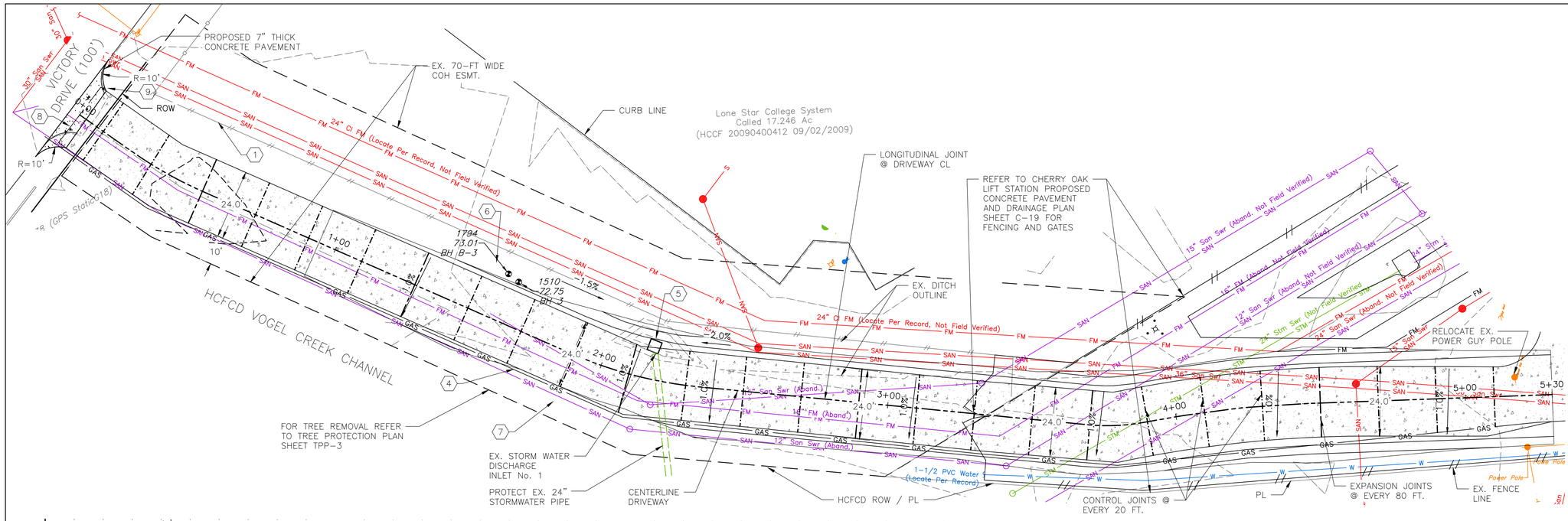

KEYNOTES

1. REMOVE EX. LONE STAR COLLEGE SECURITY FENCE AS NEEDED TO FACILITATE CONSTRUCTION. INSTALL TEMPORARY SECURITY FENCE PRIOR TO REMOVING OF EX. FENCE. COORDINATE FENCE REMOVAL WITH LONE STAR COLLEGE. REPLACE SECURITY FENCE WHEN WORK COMPLETE.
2. GRADE ACCESS DRIVE AS SHOWN, PROVIDE ROADWAY EXCAVATION IN ACCORDANCE WITH COH SPEC 02315.
3. 7-INCH-THICK CONCRETE PAVEMENT WITH 6-INCH THICK 6% LIME STABILIZED SUBGRADE C.O.H. DETAIL 02751-01 & SPEC. 02336, REF TO SHT D-14
4. 2-INCH DIA. HDPE GAS LINE- COORDINATE WITH CENTER POINT ENERGY
5. TYPE E STORM SEWER JUNCTION BOX, REF TO C.O.H. SPEC. 02633 & DET 02632-09, SHT D-13 EXTEND 24" STORM SEWER AS NEEDED
6. SOD DISTURBED AREA, REF TO C.O.H. SPEC 02922
7. HYDROMULCH AREA, REF TO C.O.H. SPEC 02921
8. REPLACE 288 SF OF DRIVEWAY PER COH SPEC 02754, REF TO DET SHT D-18
9. REPLACE 43 SF OF SIDEWALK. REF TO COH SPEC 02775 & DET SHT D-18

NOTES:

1. CHERRY OAK LIFT STATION IS LOCATED AT 4205 CHERRY OAK CIR., HOUSTON TX 77088
2. THE 100-YEAR BASE FLOOD ELEVATION IS 75.3 FEET AND 500-YEAR BASE FLOOD ELEVATION IS 76.0 FEET.

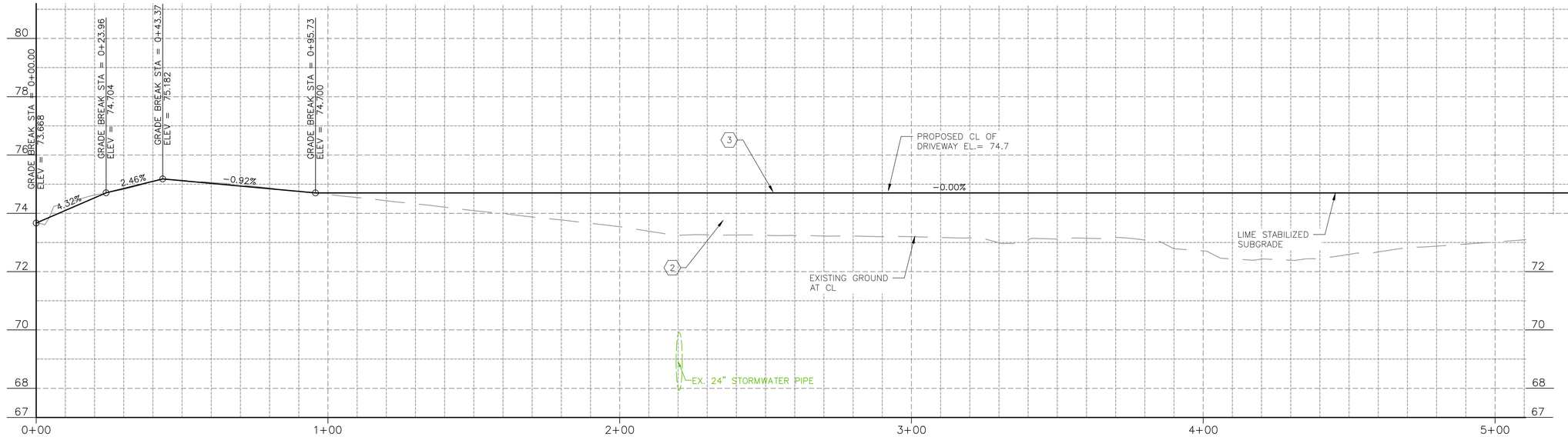

LEGEND:

- (SC) SAW CUT WITH SEALANT
- (I) ISOLATION JOINT
- (EJ) DOWEL EXPANSION JOINT
- (CJ) DOWEL CONTROL JOINT
- (LJ) DOWEL LONGITUDINAL JOINT
- TP=00.00 TOP OF PAVEMENT ELEV
- DIRECTION OF FLOW
- EXPANSION JOINT @ 80FT.
- CONTROL JOINT @ 20FT.
- LONGITUDINAL JOINT @ DRIVEWAY C/L

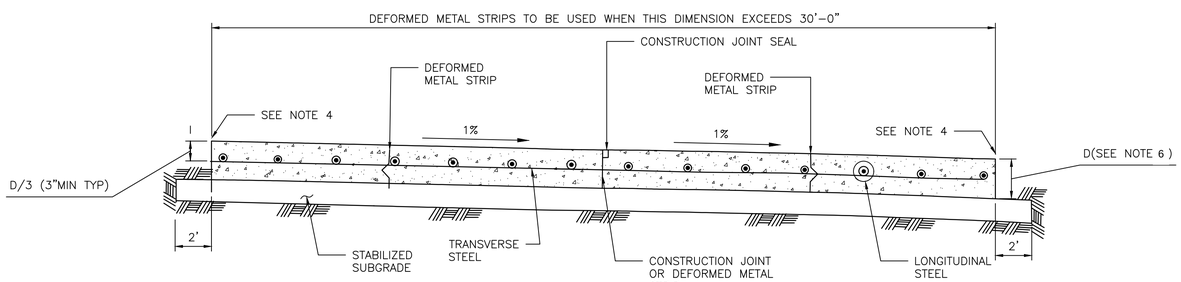

TYPICAL SINGLE ROADWAY SECTION FOR CONCRETE PAVEMENT

NOTES:

1. THE MAXIMUM WIDTH BETWEEN LONGITUDINAL JOINTS SHALL NOT EXCEED 15'-0".
2. ALL EARTHEN AREAS ARE TO BE HYDROMULCHED UNLESS SHOWN OTHERWISE ON DRAWINGS.
3. CONTRACTOR MAY SAW CUT IN LIEU OF DEFORMED METAL STRIP.
4. USE STRIP OF SOD GRASS TO PREVENT EROSION UNTIL STAND OF GRASS IS ESTABLISHED.
5. AN EQUAL OR LARGER AREA OF WELDED REINFORCEMENT BAR CONFORMING TO ASTM A497, MAY BE SUBSTITUTED FOR REBARS LISTED IN TABLE 1. SHT D-14
6. PAVEMENT IS 24-FT WIDE, 7-INCHES THICK, #4 BARS AT 18.25" OC LONGITUDAL AND 36" OC TRAVERSE

HORIZ. 0' 10' 20' 40' — 1"=20'
VERT. 0' 1' 2' 4' — 1"=2'

NO.	DATE	REVISION	APP.

ARCADIS
Infrastructure · Water · Environment · Buildings
1330 Post Oak Blvd, Suite 2250
Houston, TX 77056
Tel: 713-953-4800
Fax: 713-977-4620
www.arcadis.com
Texas Registered Engineering Firm F-533

SURVEYED BY: AMANI ENGR.
FB NO. P-6335

STATE OF TEXAS
DAVID F. RIDGWAY
105134
LICENSED PROFESSIONAL ENGINEER
01/16/2026

CITY OF HOUSTON
HOUSTON PUBLIC WORKS

LIFT STATION REHABILITATION & RECONSTRUCTION CONSENT DECREE

CHERRY OAK LIFT STATION ACCESS DRIVEWAY PLAN AND PROFILE

C-20

WBS NUMBER	FOR CITY OF HOUSTON USE ONLY
R-000267-0175-4	
DRAWING SCALE	
AS NOTED	
CITY OF HOUSTON PM	
NP NAWARAJ PANTA, P.E.	
SHEET NO. 81 OF 312	

FILE PATH: C:\Users\jomesson\DC\ACCDocs\Arcadis ACC US\AUS-30126616-Lift Station Rehab And Reconstruct CMAR\Project Files\10_WIP\30-Cherry Oaks\10T-C-Civil\C.C-20.dwg
PLOT STYLE: COH.ctb PLOTTED: 1/23/2026 10:40 AM

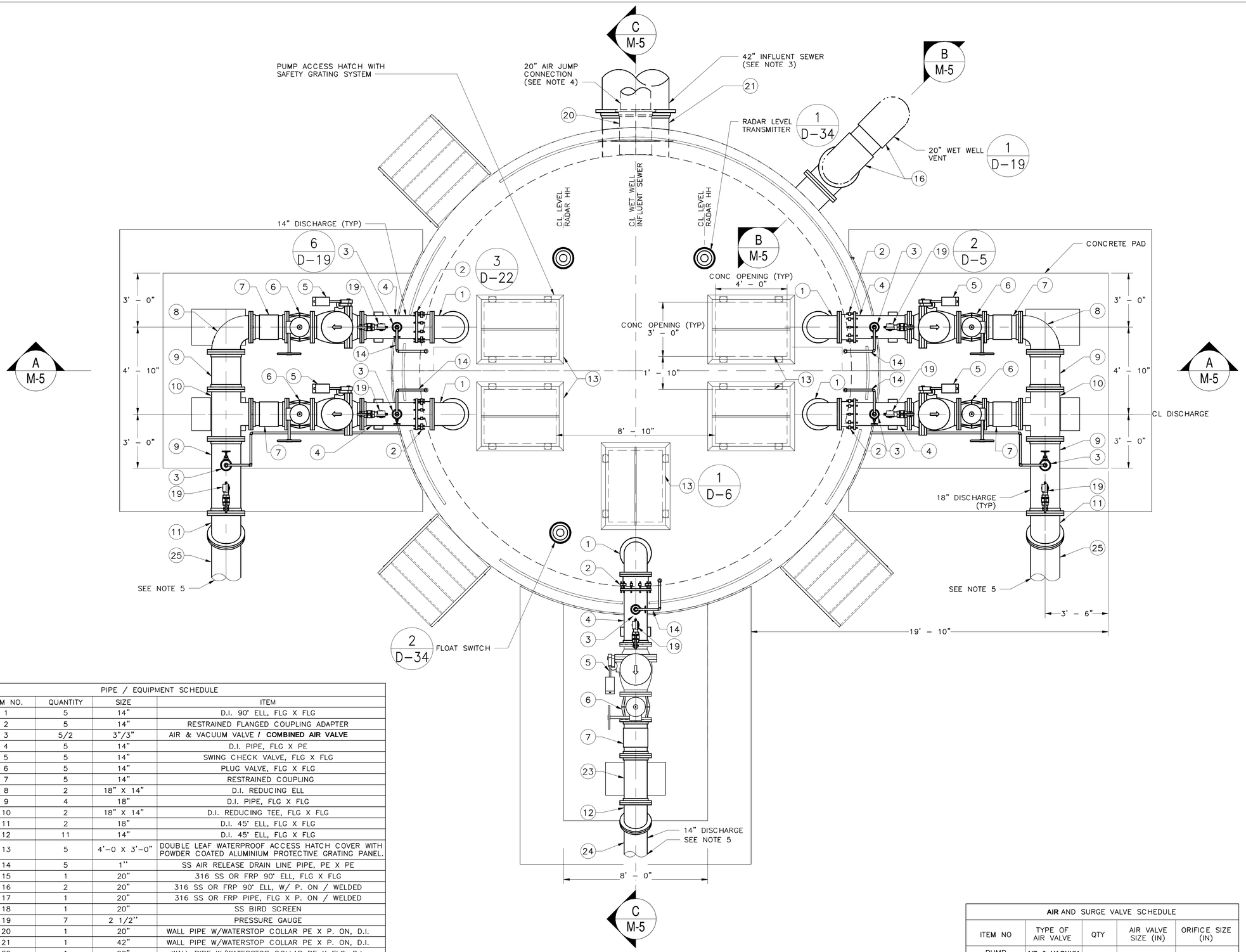

PLAN VIEW @ GRADE

0' 2' 4' 6' SCALE: 3/8" = 1'-0"

PIPE / EQUIPMENT SCHEDULE			
ITEM NO.	QUANTITY	SIZE	ITEM
1	5	14"	D.I. 90° ELL, FLG X FLG
2	5	14"	RESTRAINED FLANGED COUPLING ADAPTER
3	5/2	3"/3"	AIR & VACUUM VALVE / **COMBINED AIR VALVE**
4	5	14"	D.I. PIPE, FLG X PE
5	5	14"	SWING CHECK VALVE, FLG X FLG
6	5	14"	PLUG VALVE, FLG X FLG
7	5	14"	RESTRAINED COUPLING
8	2	18" X 14"	D.I. REDUCING ELL
9	4	18"	D.I. PIPE, FLG X FLG
10	2	18" X 14"	D.I. REDUCING TEE, FLG X FLG
11	2	18"	D.I. 45° ELL, FLG X FLG
12	11	14"	D.I. 45° ELL, FLG X FLG
13	5	4'–0 X 3'–0"	DOUBLE LEAF WATERPROOF ACCESS HATCH COVER WITH POWDER COATED ALUMINIUM PROTECTIVE GRATING PANEL.
14	5	1"	SS AIR RELEASE DRAIN LINE PIPE, PE X PE
15	1	20"	316 SS OR FRP 90° ELL, FLG X FLG
16	2	20"	316 SS OR FRP 90° ELL, W/ P. ON / WELDED
17	1	20"	316 SS OR FRP PIPE, FLG X P. ON / WELDED
18	1	20"	SS BIRD SCREEN
19	7	2 1/2"	PRESSURE GAUGE
20	1	20"	WALL PIPE W/WATERSTOP COLLAR PE X P. ON, D.I.
21	1	42"	WALL PIPE W/WATERSTOP COLLAR PE X P. ON, D.I.
22	1	20"	WALL PIPE W/WATERSTOP COLLAR PE X FLG, D.I.
23	1	14"	D.I. PIPE, FLG X FLG
24	1	14"	D.I. PIPE, FLG X MJ
25	2	18"	D.I. PIPE, FLG X MJ

AIR AND SURGE VALVE SCHEDULE				
ITEM NO	TYPE OF AIR VALVE	QTY	AIR VALVE SIZE (IN)	ORIFICE SIZE (IN)
PUMP DISCHARGE	**AIR & VACUUM VALVE**	5	3	-
FORCE MAIN	COMBINED AIR VALVE	2	3	3/16

NO.	DATE	REVISIONS	APP.

NOTES:

1. REFER TO STRUCTURAL PLAN FOR REPAIR.
2. PUMP MANUFACTURER TO PROVIDE ENGINEERED SHOP DRAWINGS FOR WATERPROOF ACCESS HATCH SEALED BY A LICENSED ENGINEER FOR DEFERRED SUBMITTAL TO CODE ENFORCEMENT FROM CITY APPROVED FABRICATOR. SEE SPECIFICATION SECTION 11311 CLAUSE 2.03 (A) FOR DETAILS.
3. SEE SHEET C–16 & C–17 FOR CONTINUATION OF 42" INFLUENT SEWER AND ENTRY OF 36" INFLUENT SEWER AT AUXILIARY WET WELL (MH–A).
4. CONNECT 20" AIR JUMP CONNECTION TO THE AUXILIARY WET WELL. REFER SHEET C–16 FOR LOCATION OF AUXILIARY WET WELL.
5. SEE SHEET C–16 FOR CONTINUATION OF FORCE MAIN.

ARCADIS
Infrastructure. Water. Environment. Buildings
1330 Post Oak Blvd, Suite 2250 Houston, TX 77056
Tel: 713–953–4800
Fax: 713–977–4620
www.arcadis.com
Texas Registered Engineering Firm F-533

SURVEYED BY: AMANI ENGR.

FB NO. P–6335

STATE OF TEXAS
DAVID F. RIDGWAY
105134
LICENSED
PROFESSIONAL ENGINEER
11/20/2025

CITY OF HOUSTON

HOUSTON PUBLIC WORKS

LIFT STATION REHABILITATION & RECONSTRUCTION
CONSENT DECREE

CHERRY OAK LIFT STATION
WET WELL
PLAN

M–4

WBS NUMBER	FOR CITY OF HOUSTON USE ONLY
R-000267-0175-4	
DRAWING SCALE	
AS SHOWN	
CITY OF HOUSTON PM	
NP NAWARAJ PANTA, P.E	
SHEET NO 82 OF 312	

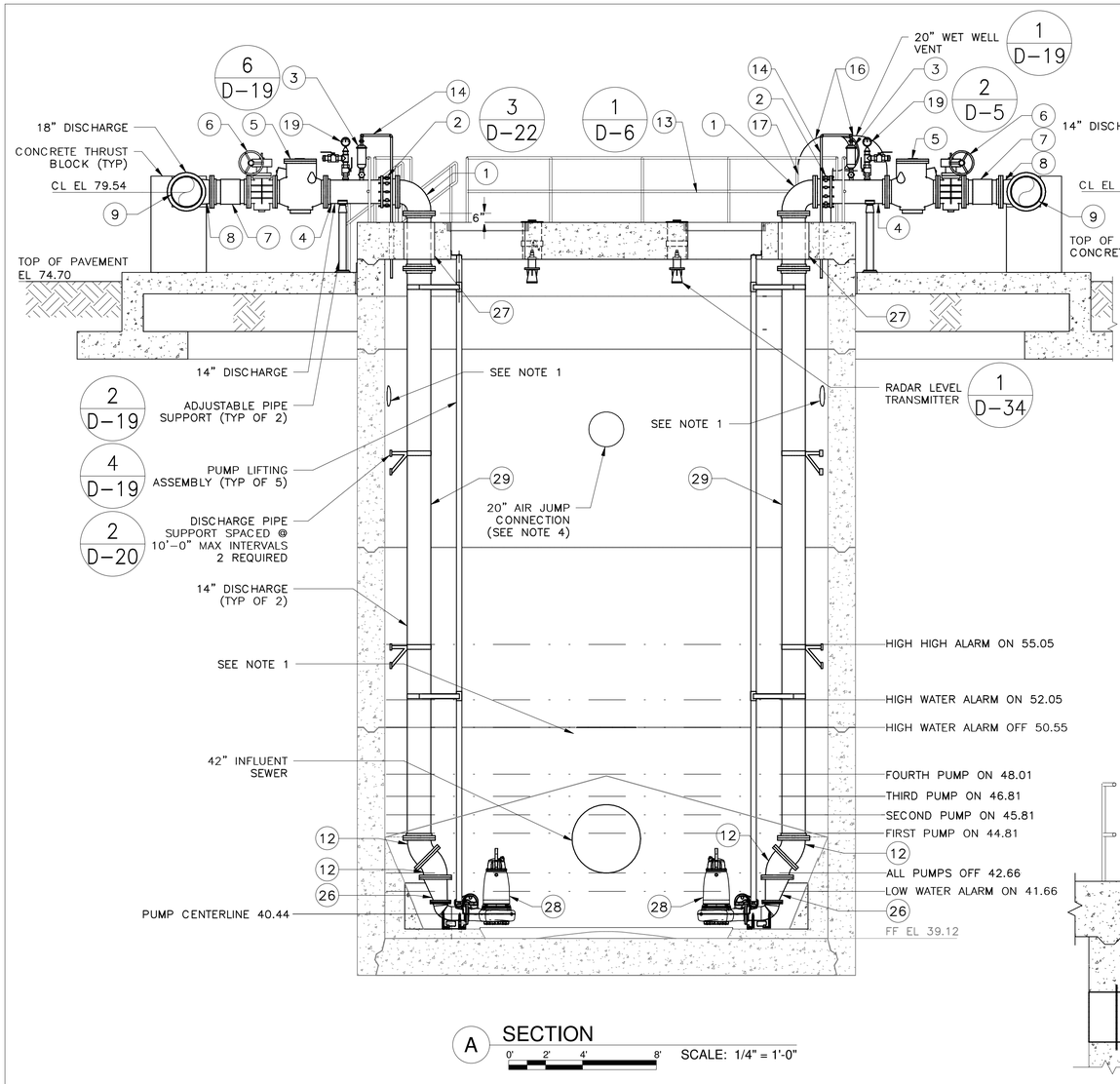

A SECTION
0' 2' 4' 8' SCALE: 1/4" = 1'-0"

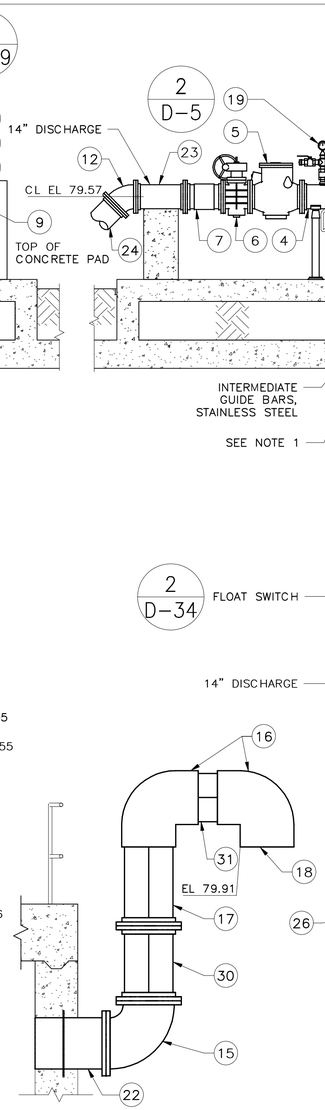

B SECTION
0' 2' 4' 6' SCALE: 3/8" = 1'-0"

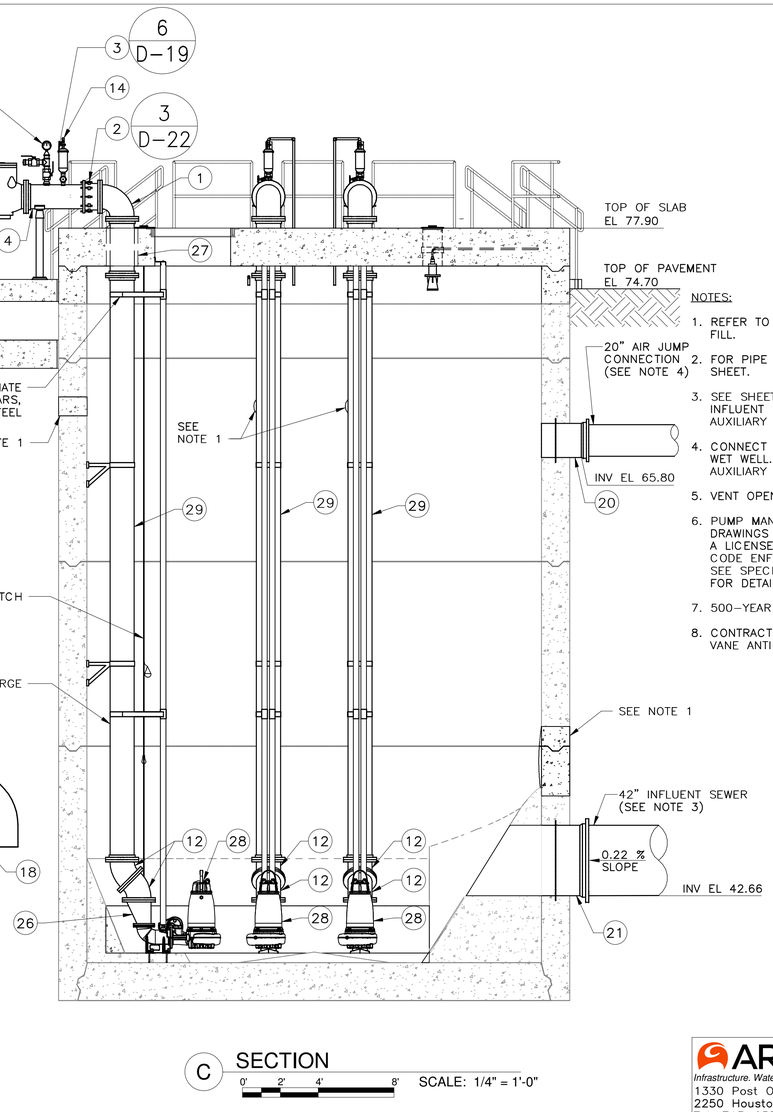

C SECTION
0' 2' 4' 8' SCALE: 1/4" = 1'-0"

NOTES:

1. REFER TO STRUCTURAL PLAN FOR STRUCTURAL WALL FILL.
2. FOR PIPE SCHEDULE, SEE PIPE FITTING SCHEDULE THIS SHEET.
3. SEE SHEET C-16 & C-17 FOR CONTINUATION OF 42" INFLUENT SEWER AND ENTRY OF 36" INFLUENT SEWER AT AUXILIARY WET WELL (MH-A).
4. CONNECT 20" AIR JUMP CONNECTION TO THE AUXILIARY WET WELL. REFER SHEET C-16 FOR LOCATION OF AUXILIARY WET WELL.
5. VENT OPENING AT ELEV 79.91.
6. PUMP MANUFACTURER TO PROVIDE ENGINEERED SHOP DRAWINGS FOR WATERPROOF ACCESS HATCH SEALED BY A LICENSED ENGINEER FOR DEFERRED SUBMITTAL TO CODE ENFORCEMENT FROM CITY APPROVED FABRICATOR. SEE SPECIFICATION SECTION 11311 CLAUSE 2.03 (A) FOR DETAILS.
7. 500-YEAR FLOOD PLAIN ELEV=76.00
8. CONTRACTOR TO PROVIDE SHOP DRAWINGS FOR EIGHT VANE ANTI-VORTEX DEVICE AT PUMP SUCTION.

PIPE / EQUIPMENT SCHEDULE			
ITEM NO.	QUANTITY	SIZE	ITEM
1	5	14"	D.I. 90° ELL, FLG X FLG
2	5	14"	RESTRAINED FLANGED COUPLING ADAPTER
3	5/2	3"/3"	AIR & VACUUM VALVE / **COMBINED AIR VALVE**
4	5	14"	D.I. PIPE, FLG X PE
5	5	14"	SWING CHECK VALVE, FLG X FLG
6	5	14"	PLUG VALVE, FLG X FLG
7	5	14"	RESTRAINED COUPLING
8	2	18" x 14"	D.I. REDUCING ELL
9	4	18"	D.I. PIPE, FLG X FLG
10	2	18" x 14"	D.I. REDUCING TEE, FLG
11	2	18"	D.I. 45° ELL, FLG X FLG
12	11	14"	D.I. 45° ELL, FLG X FLG
13	5	4'-0" X 3'-0"	DOUBLE LEAF WATERPROOF ACCESS HATCH COVER WITH POWDER COATED ALUMINIUM PROTECTIVE GRATING PANEL.
14	5	1"	SS AIR RELEASE DRAIN LINE PIPE, PE X PE
15	1	20"	316 SS OR FRP 90° ELL, FLG X FLG

PIPE / EQUIPMENT SCHEDULE			
ITEM NO.	QUANTITY	SIZE	ITEM
16	2	20"	316 SS OR FRP 90° ELL, W / P. ON WELDED
17	1	20"	316 SS OR FRP PIPE, FLG X P. ON / WELDED
18	1	20"	SS BIRD SCREEN
19	5	1/4"	PRESSURE GAUGE
20	1	20"	WALL PIPE W/WATERSTOP COLLAR PE X P. ON, D.I.
21	1	42"	WALL PIPE W/WATERSTOP COLLAR PE X P. ON, D.I.
22	1	20"	WALL PIPE W/WATERSTOP COLLAR PE. X FLG, D.I.
23	1	14"	D.I. PIPE, FLG X FLG
24	1	14"	D.I. PIPE, FLG X MJ
25	2	18"	D.I. PIPE, FLG X MJ
26	5	14" X 8"	DI ECC. REDUCER, FLG X FLG
27	5	14"	WALL PIPE, FLG X FLG
28	5	–	SUBMERSIBLE PUMP
29	5	14"	D.I. PIPE, FLG X FLG
30	1	20"	316 SS OR FRP OR D.I. PIPE, FLG X FLG / WELD/P.ON
31	1	20"	316 SS OR FRP PIPE, P. ON / WELDED X P. ON / WELDED

STATION OPERATION TABLES

RISING LEVEL CYCLE			
WATER LEVEL DEPTH	WATER LEVEL ELEVATION	ACTION	PUMP(S) IN OPERATION
3.54	42.66	PUMPS OFF LEVEL – NO ACTION	ALL PUMPS ARE OFF
5.69	44.81	LEAD PUMP TURNS ON	LEAD PUMP ON
6.69	45.81	SECOND PUMP TURNS ON	LEAD & SECOND PUMPS ON
7.69	46.81	THIRD PUMP TURNS ON	LEAD, SECOND & THIRD PUMPS ON
8.89	48.01	FOURTH PUMP TURNS ON	LEAD, SECOND, THIRD & FOURTH PUMPS ON
12.93	52.05	HIGH WATER ALARM ON	HIGH WATER ALARM SOUND
13.93	55.05	HIGH HIGH LEVEL ALARM (FLOAT ON LEVEL)	ALL DUTY PUMPS ON (FLOATS)
FALLING LEVEL CYCLE			
WATER LEVEL DEPTH	WATER LEVEL ELEVATION	ACTION	PUMP(S) IN OPERATION
3.54	42.66	FLOAT OFF LEVEL	ALL PUMPS OFF (FLOATS)
11.43	50.55	HIGH WATER LEVEL ALARM OFF	LEAD, SECOND, THIRD, & FOURTH PUMPS ON
7.69	46.81	LEAD PUMP TURNS OFF	SECOND, THIRD, & FOURTH PUMPS ON
6.69	45.81	SECOND PUMP TURNS OFF	THIRD & FOURTH PUMPS ON
5.69	44.81	THIRD PUMP TURNS OFF	FOURTH PUMP ON
3.54	42.66	FOURTH PUMP TURNS OFF	ALL PUMPS STOPPED – STANDBY PUMP SWITCHES TO LEAD PUMP
2.54	41.66	LOW LEVEL ALARM	–

NO.	DATE	REVISIONS	APP.

ARCADIS
Infrastructure. Water. Environment. Buildings
1330 Post Oak Blvd, Suite 2250 Houston, TX 77056
Tel: 713-953-4800
Fax: 713-977-4620
www.arcadis.com
Texas Registered Engineering Firm F-533

SURVEYED BY: AMANI ENGR.
FB NO. P-6335

STATE OF TEXAS
DAVID F. RIDGWAY
105134
LICENSED
PROFESSIONAL ENGINEER
03/12/2026

CITY OF HOUSTON

HOUSTON PUBLIC WORKS

LIFT STATION REHABILITATION & RECONSTRUCTION
CONSENT DECREE

CHERRY OAK LIFT STATION
WET WELL
SECTION

M-5

WBS NUMBER	FOR CITY OF HOUSTON USE ONLY
R-000267-0175-4	
DRAWING SCALE	
As indicated	
CITY OF HOUSTON PM	
NP NAWARAJ PANTA, P.E	
SHEET NO 83 OF 312	

NO.	DATE	REVISIONS	APP.

CHERRY OAK LIFT STATION - 13.32 MGD FIRM CAPACITY
SYSTEM & PUMP CURVES

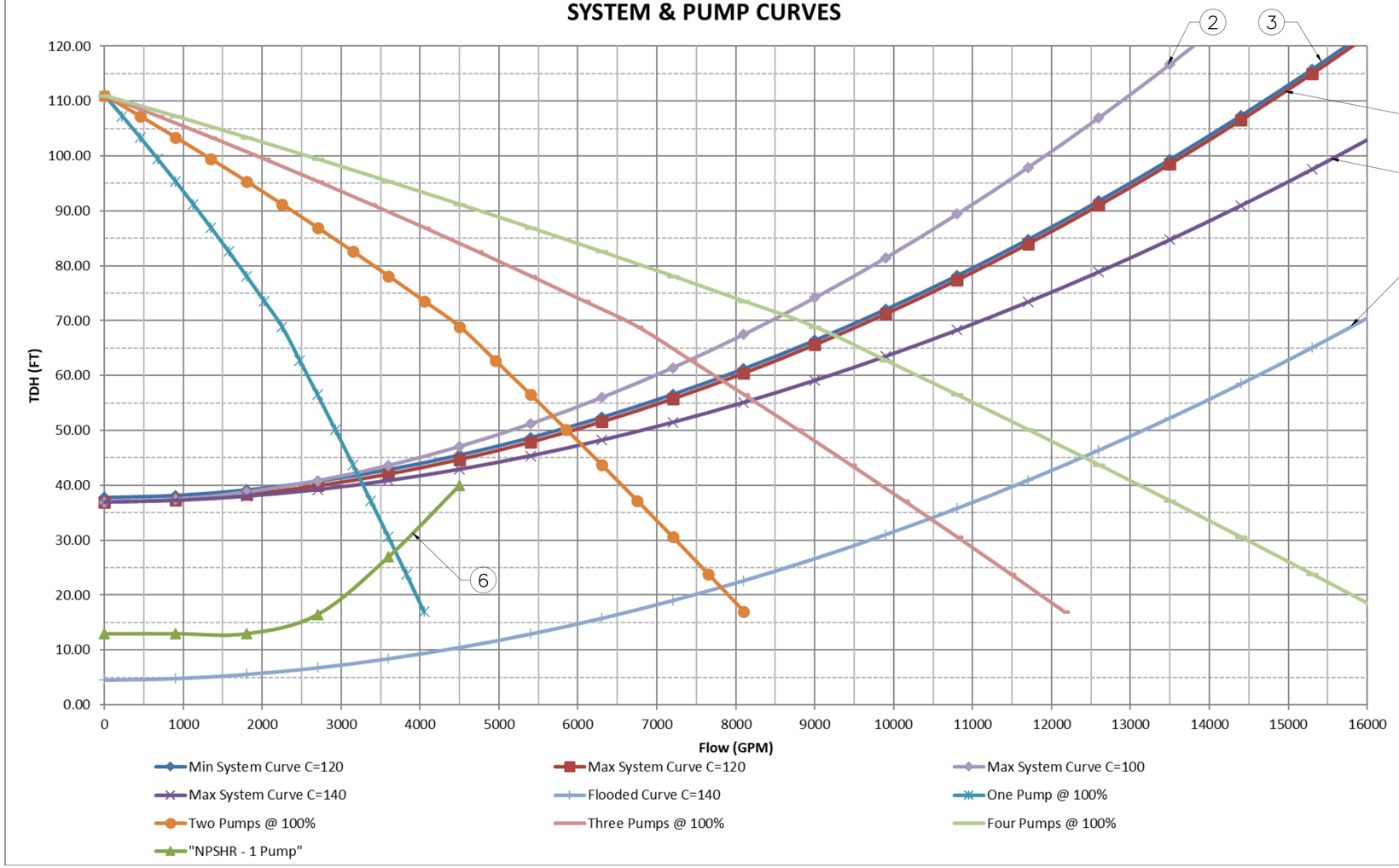

PUMP CURVE NOTES:

1. LOW NORMAL OPERATING LEVEL C=120 – DESIGN
2. HIGH NORMAL OPERATING LEVEL C=100 – INFORMATION ONLY (TCEQ)
3. HIGH NORMAL OPERATING LEVEL C=120 – DESIGN
4. HIGH NORMAL OPERATING LEVEL C=140– INFORMATION ONLY
5. EMERGENCY FLOODED OPERATING LEVEL C=140 – MAXIMUM DISCHARGE
6. NET POSITIVE HEAD SUCTION REQUIRED (NPSHR) BASED ON NORMAL OPERATING WATER LEVEL

PUMP CHARACTERISTICS	PUMP NO. 1	PUMP NO. 2	PUMP NO. 3	PUMP NO. 4	PUMP NO. 5
MOTOR DATA NOMINAL SIZE (HP) MAX SPEED (RPM)	60 1170	60 1170	60 1170	60 1170	60 1170
SOLIDS PASSAGE MIN. SPHERE (IN)	3	3	3	3	3
CAPACITY (GPM) DESIGN RUNOUT	2,312 4,275.7	2,312 4,275.7	2,312 4,275.7	2,312 4,275.7	2,312 4,275.7
DISCHARGE HEAD (FT.) DESIGN RUNOUT SHUT OFF	67.84 25 111	67.84 25 111	67.84 25 111	67.84 25 111	67.84 25 111
EFFICIENCY (%)	**80.2**	**80.2**	**80.2**	**80.2**	**80.2**
NPSHR (FT) DESIGN RUNOUT	14 **31.5**	14 **31.5**	14 **31.5**	14 **31.5**	14 **31.5**
PUMP CYCLE TIME (MIN.)	10	10	10	10	10
CUMULATIVE CAPACITY (GPM)	3,250	5,750	7,750	9,250	–
NPSHA (FT)	34.4	34.4	**80.2**	**80.2**	**80.2**

ARCADIS
Infrastructure. Water. Environment. Buildings
1330 Post Oak Blvd, Suite 2250 Houston, TX 77056
Tel: 713-953-4800
Fax: 713-977-4620
www.arcadis.com
Texas Registered Engineering Firm F-533

SURVEYED BY: AMANI ENGR.

FB NO. P-6335

STATE OF TEXAS
DAVID F. RIDGWAY
105134
LICENSED
PROFESSIONAL ENGINEER
01/16/2026

CITY OF HOUSTON

HOUSTON PUBLIC WORKS

LIFT STATION REHABILITATION & RECONSTRUCTION
CONSENT DECREE

CHERRY OAK LIFT STATION
WET WELL
PUMP CURVE DATA

M-6

WBS NUMBER	FOR CITY OF HOUSTON USE ONLY
R-000267-0175-4	
DRAWING SCALE	
3/32" = 1'-0"	
CITY OF HOUSTON PM	
NP NAWARAJ PANTA, P.E	
SHEET NO 84 OF 312	

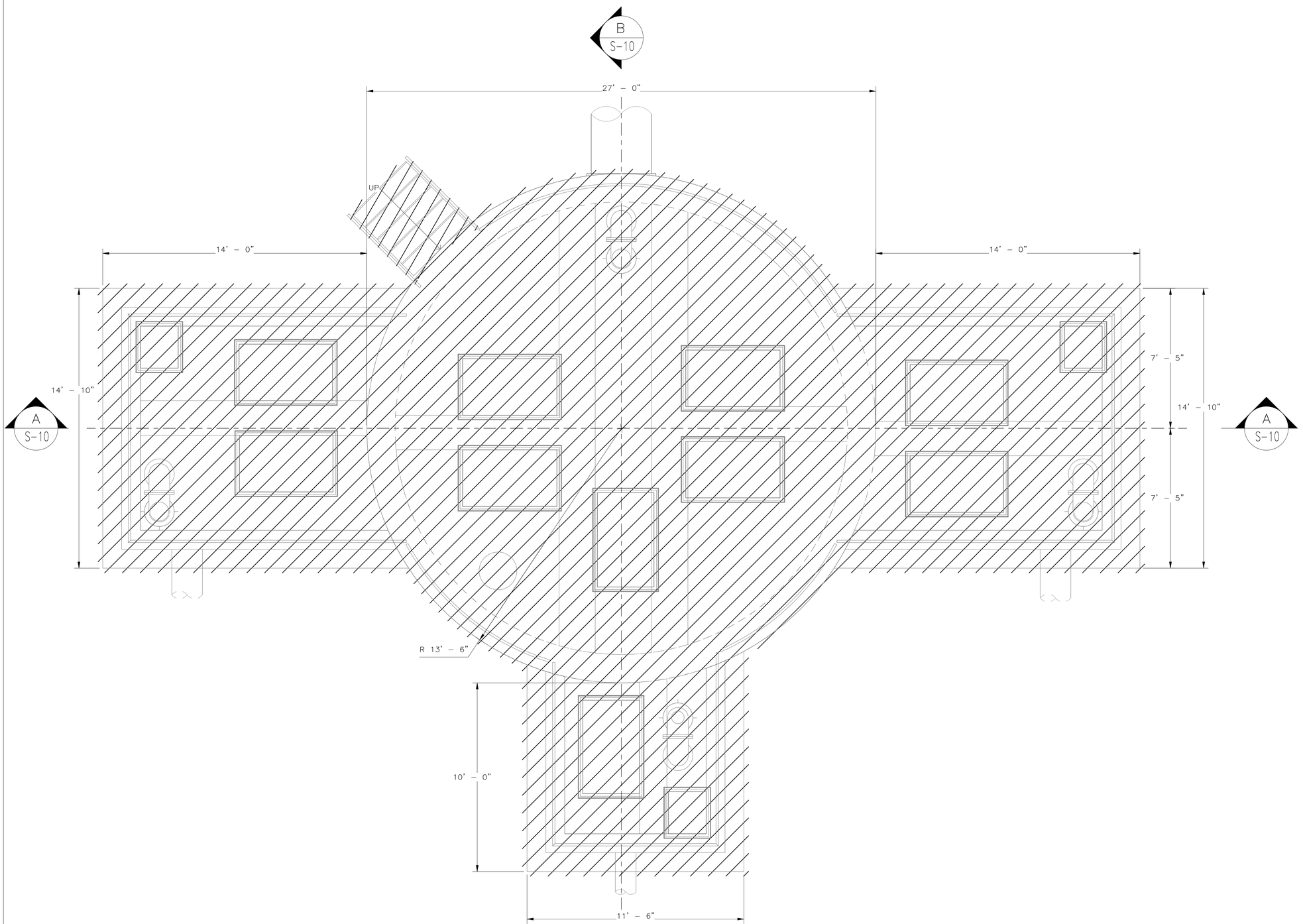

DEMOLITION PLAN

0' 2' 4' 6'

SCALE: 3/8" = 1'–0"

N

NO.	DATE	REVISIONS	APP.

DEMOLITION NOTES:

1. BACKGROUND OF THIS DRAWING IS BASED ON RECORD DRAWING NO. 30156. CONTRACTOR SHALL BE RESPONSIBLE FOR VERIFYING EXISTING CONDITIONS PRIOR TO SUBMITTING BID.
2. THE CITY OF HOUSTON (COH) HAS THE FIRST RIGHT OF REFUSAL OF ANY EQUIPMENT OR MATERIAL REMOVED. CONTACT CONSTRUCTION MANAGER AT LEAST 72 HOURS PRIOR TO DEMOLITION IN ORDER TO SALVAGED ITEMS TO A LOCATION WITHIN THE CITY. THE CONTRACTOR SHALL PROPERLY DISPOSE OF ALL OTHER MATERIAL NOT IDENTIFIED FOR SALVAGE.
3. EXISTING WET WELL SHALL BE CLEANED OF ALL DEBRIS, WASTEWATER DEMOLITION WASTE AND OTHER RESIDUES BY CITY OF HOUSTON APPROVED CERTIFIED DISPOSAL CONTRACTOR .
4. CONTRACTOR SHALL OBTAIN CITY OF HOUSTON DEMOLITION PERMIT OR SUBMIT PROOF OF NON–APPLICABILITY TO COH CONSTRUCTION PROJECT MANAGER PRIOR TO THE DEMOLITION ACTIVITIES AT THE SITE.
5. DO NOT DISTURB ANY EXISTING STRUCTURE THAT ABUTS A STRUCTURE TO BE REMOVED. ANY DAMAGES TO STRUCTURES THAT ARE NOT INDICATED TO BE DEMOLISHED/REMOVED, OR THAT ARE OUTSIDE OF THE CONSTRUCTION LIMITS SHALL BE REPAIRED AT NO ADDITIONAL COST TO THE CITY AND AT NO COST TO THE PROPERTY OWNER.

LEGEND:

TO BE DEMOLISHED

ARCADIS
Infrastructure. Water. Environment. Buildings
1330 Post Oak Blvd,Suite 2250
Houston, TX 77056
Tel: 713–953–4800
Fax: 713–977–4620
www.arcadis.com
Texas Registered Engineering Firm F–533

SURVEYED BY: AMANI ENGR.

FB NO. P–6335

STATE OF TEXAS
TANVIR HOSSAIN
121767
LICENSED
PROFESSIONAL ENGINEER

CITY OF HOUSTON

HOUSTON PUBLIC WORKS

LIFT STATION REHABILITATION & RECONSTRUCTION
CONSENT DECREE

CHERRY OAK LIFT STATION
WET WELL
DEMOLITION PLAN

S–9

WBS NUMBER	FOR CITY OF HOUSTON USE ONLY
R–000267–0175–4	
DRAWING SCALE	
As indicated	
CITY OF HOUSTON PM	
NP NAWARAJ PANTA, P.E	
SHEET NO : 85 OF 312	

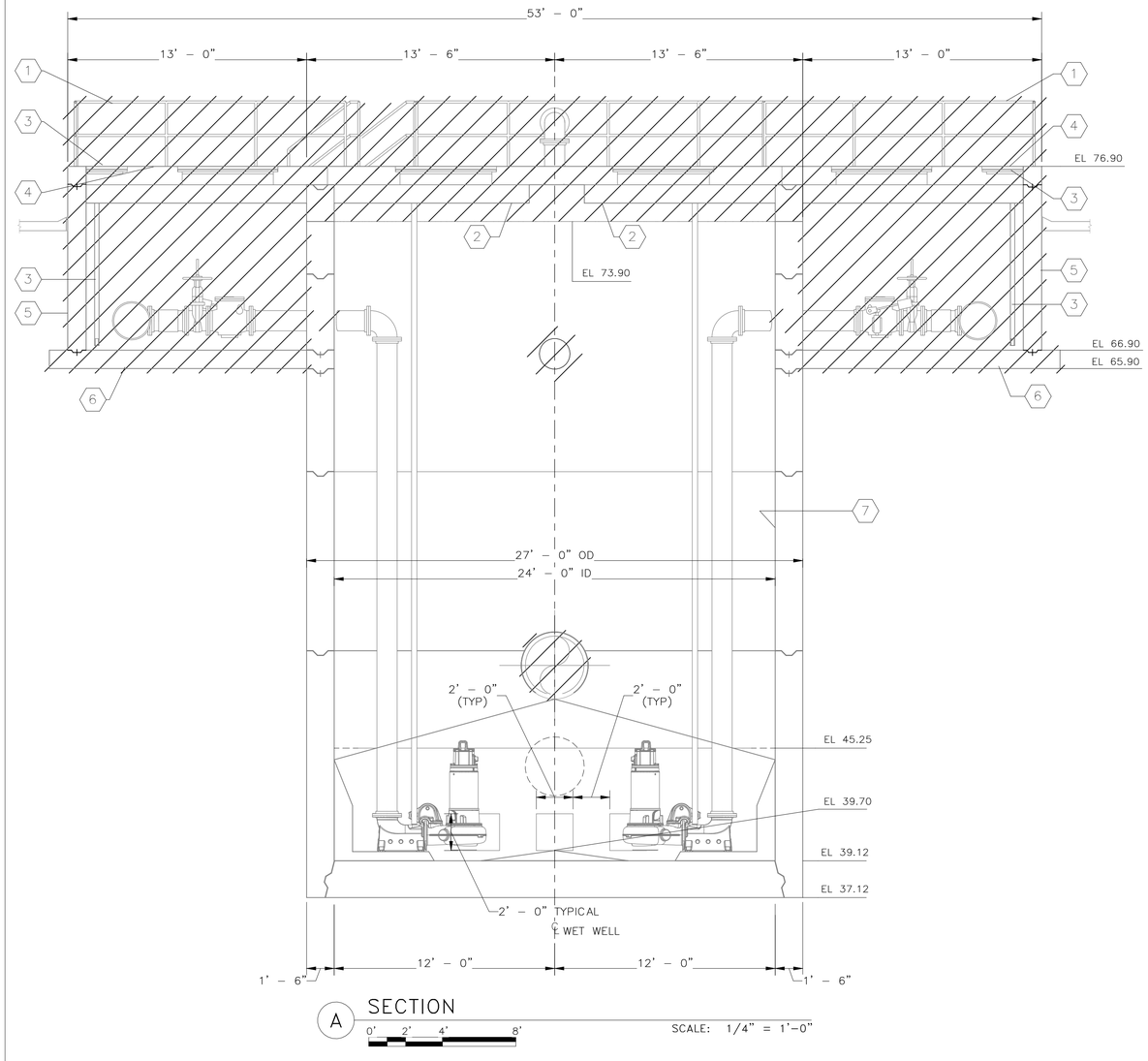

A SECTION

0' 2' 4' 8'

SCALE: 1/4" = 1'–0"

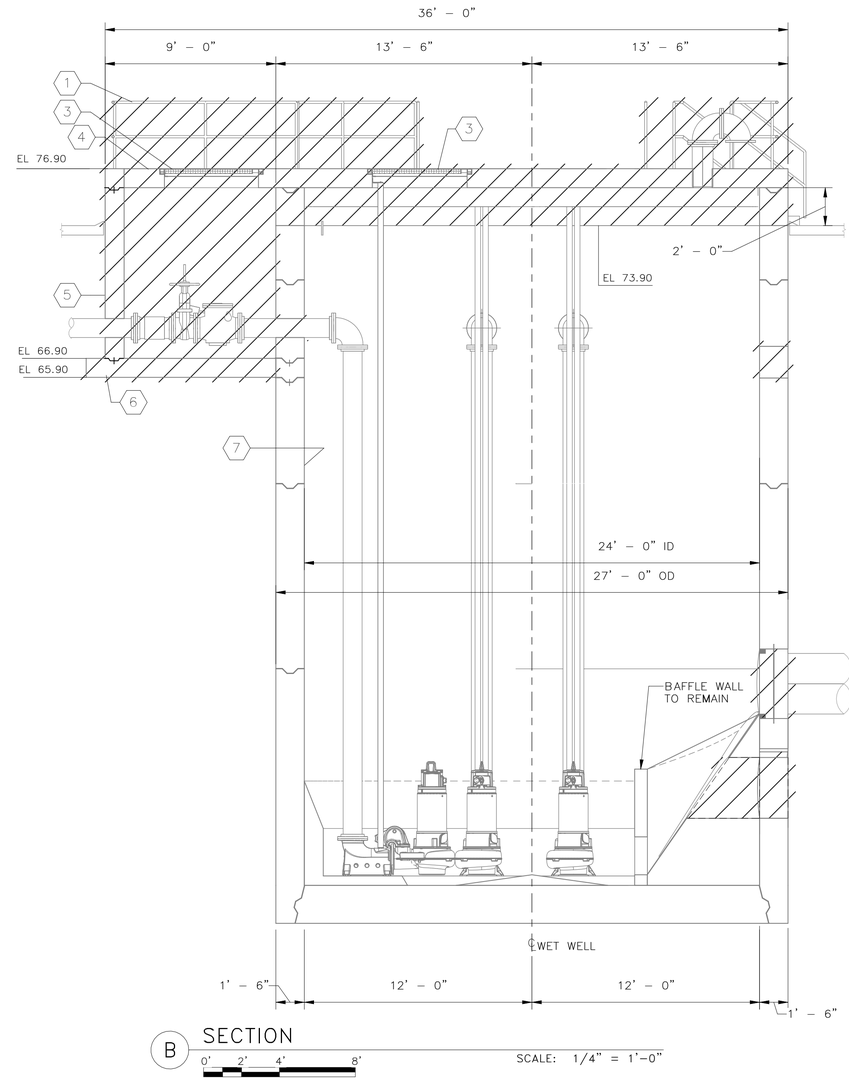

B SECTION

0' 2' 4' 8'

SCALE: 1/4" = 1'–0"

DEMOLITION NOTES:

1. REMOVE RAILINGS ON WET WELL TOP SLAB
2. REMOVE WET WELL TOP SLAB
3. REMOVE ACCESS HATCH AND LADDERS IN WET WELL TOP SLAB
4. REMOVE VALVE VAULT TOP SLAB
5. REMOVE VALVE VAULT WALLS
6. REMOVE VALVE VAULT FOUNDATION
7. REMOVE EX. COATING / LINER SYSTEM

LEGEND:

TO BE DEMOLISHED

NO.	DATE	REVISIONS	APP.

ARCADIS
Infrastructure. Water. Environment. Buildings
1330 Post Oak Blvd,Suite 2250
Houston, TX 77056
Tel: 713-953-4800
Fax: 713-977-4620
www.arcadis.com
Texas Registered Engineering Firm F-533

SURVEYED BY: AMANI ENGR.

FB NO. P-6335

STATE OF TEXAS
TANVIR HOSSAIN
121767
LICENSED
PROFESSIONAL ENGINEER

CITY OF HOUSTON

HOUSTON PUBLIC WORKS

LIFT STATION REHABILITATION & RECONSTRUCTION
CONSENT DECREE

CHERRY OAK LIFT STATION
WET WELL
DEMOLITION SECTION

S–10

WBS NUMBER	FOR CITY OF HOUSTON USE ONLY
R–000267–0175–4	
DRAWING SCALE	
AS NOTED	
CITY OF HOUSTON PM	
NP NAWARAJ PANTA, P.E	
SHEET NO : 86 OF 312	

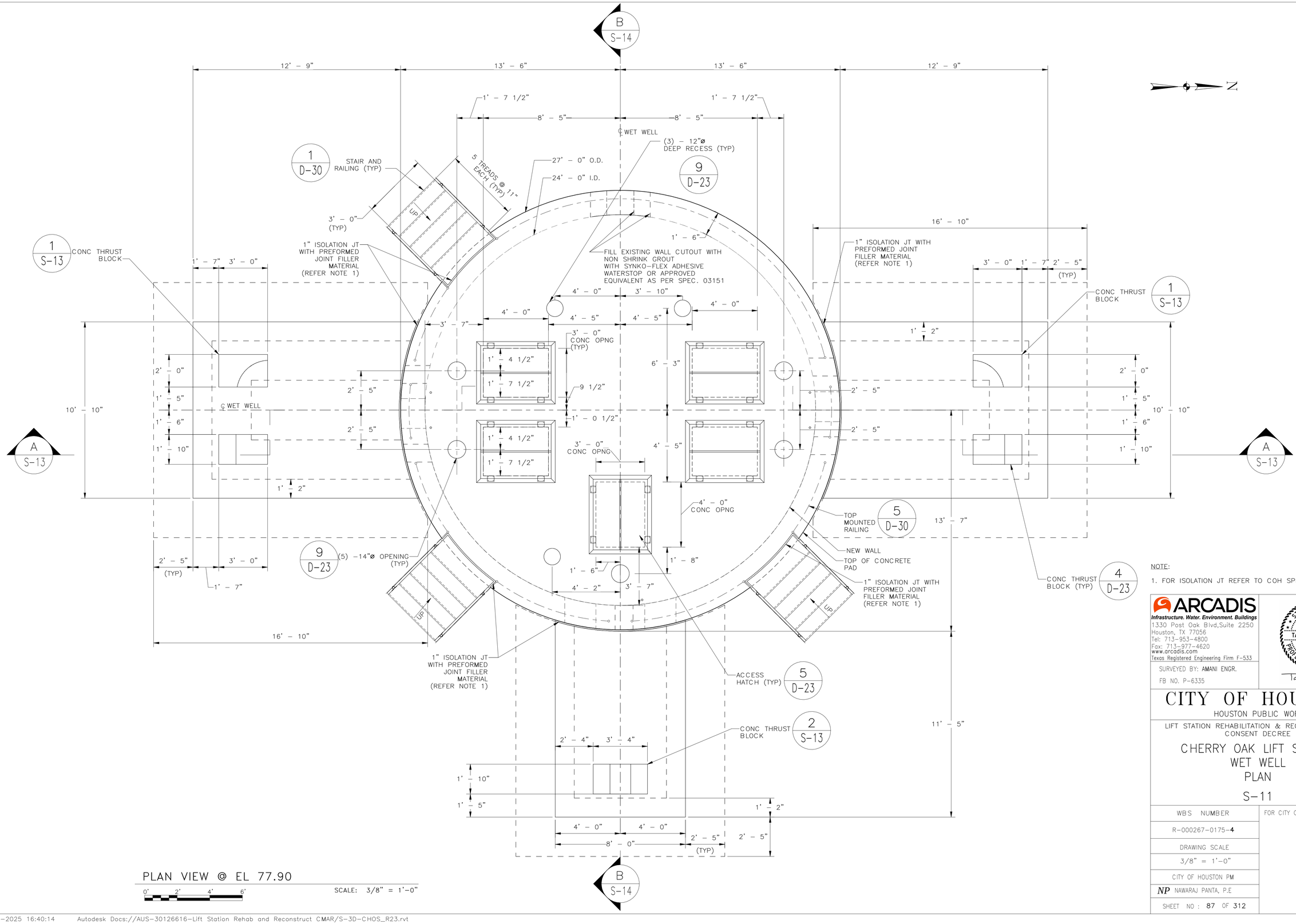

PLAN VIEW @ EL 77.90

0' 2' 4' 6'

SCALE: 3/8" = 1'–0"

NO.	DATE	REVISIONS	APP.

NOTE:

1. FOR ISOLATION JT REFER TO COH SPEC. 03151

ARCADIS
Infrastructure. Water. Environment. Buildings
1330 Post Oak Blvd,Suite 2250
Houston, TX 77056
Tel: 713–953–4800
Fax: 713–977–4620
www.arcadis.com
Texas Registered Engineering Firm F–533

SURVEYED BY: AMANI ENGR.

FB NO. P–6335

STATE OF TEXAS
TANVIR HOSSAIN
121767
LICENSED
PROFESSIONAL ENGINEER

CITY OF HOUSTON

HOUSTON PUBLIC WORKS

LIFT STATION REHABILITATION & RECONSTRUCTION CONSENT DECREE

CHERRY OAK LIFT STATION WET WELL PLAN

S–11

WBS NUMBER	FOR CITY OF HOUSTON USE ONLY
R–000267–0175–4	
DRAWING SCALE	
3/8" = 1'–0"	
CITY OF HOUSTON PM	
NP NAWARAJ PANTA, P.E	
SHEET NO : 87 OF 312	

NO.	DATE	REVISIONS	APP.

N

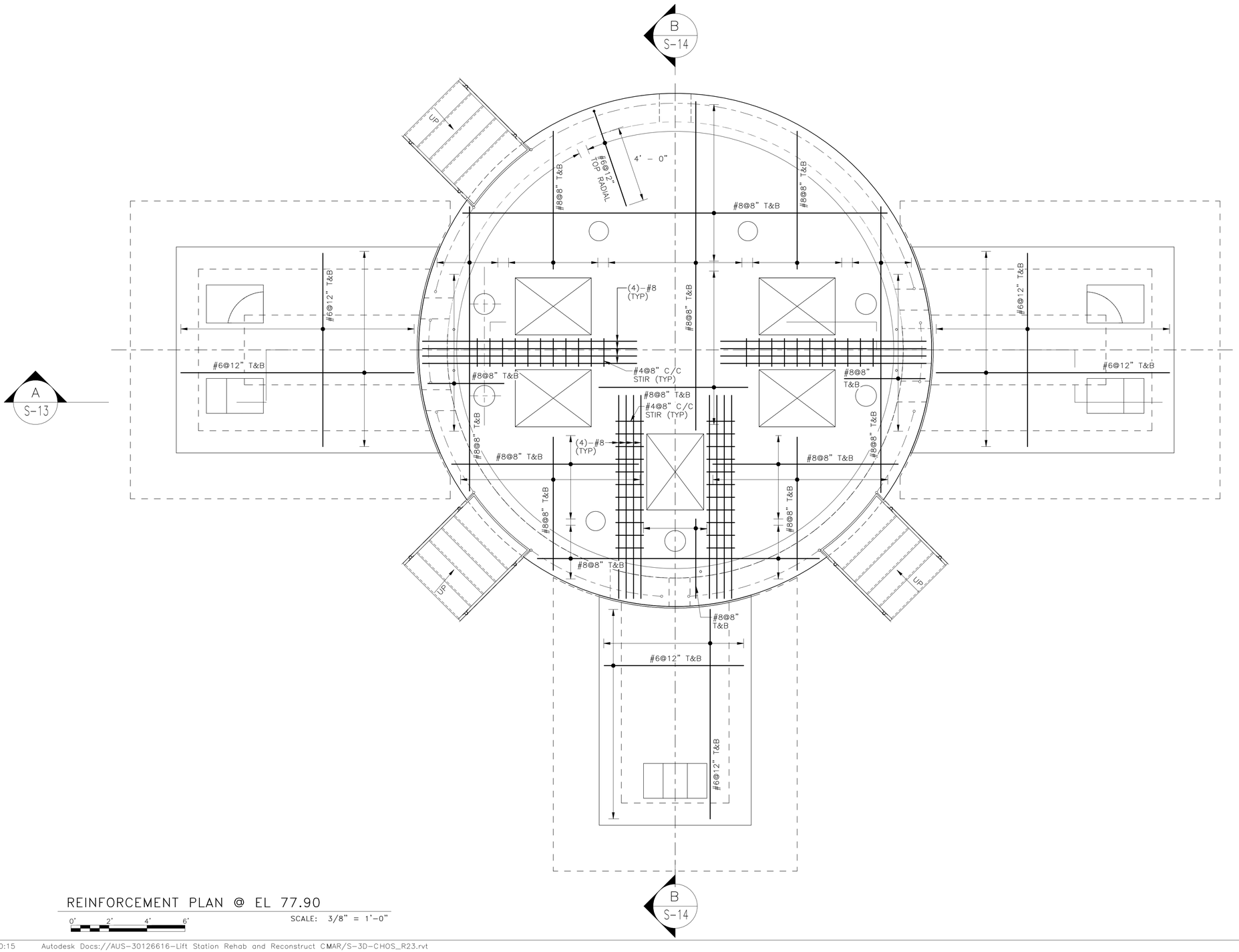

REINFORCEMENT PLAN @ EL 77.90

0' 2' 4' 6'

SCALE: 3/8" = 1'-0"

ARCADIS
Infrastructure. Water. Environment. Buildings
1330 Post Oak Blvd,Suite 2250
Houston, TX 77056
Tel: 713-953-4800
Fax: 713-977-4620
www.arcadis.com
Texas Registered Engineering Firm F-533

SURVEYED BY: AMANI ENGR.

FB NO. P-6335

STATE OF TEXAS
TANVIR HOSSAIN
121767
LICENSED
PROFESSIONAL ENGINEER

CITY OF HOUSTON

HOUSTON PUBLIC WORKS

LIFT STATION REHABILITATION & RECONSTRUCTION
CONSENT DECREE

CHERRY OAK LIFT STATION
WET WELL
REINFORCEMENT PLAN

S-12

WBS NUMBER	FOR CITY OF HOUSTON USE ONLY
R-000267-0175-4	
DRAWING SCALE	
3/8" = 1'-0"	
CITY OF HOUSTON PM	
NP NAWARAJ PANTA, P.E	
SHEET NO : 88 OF 312	

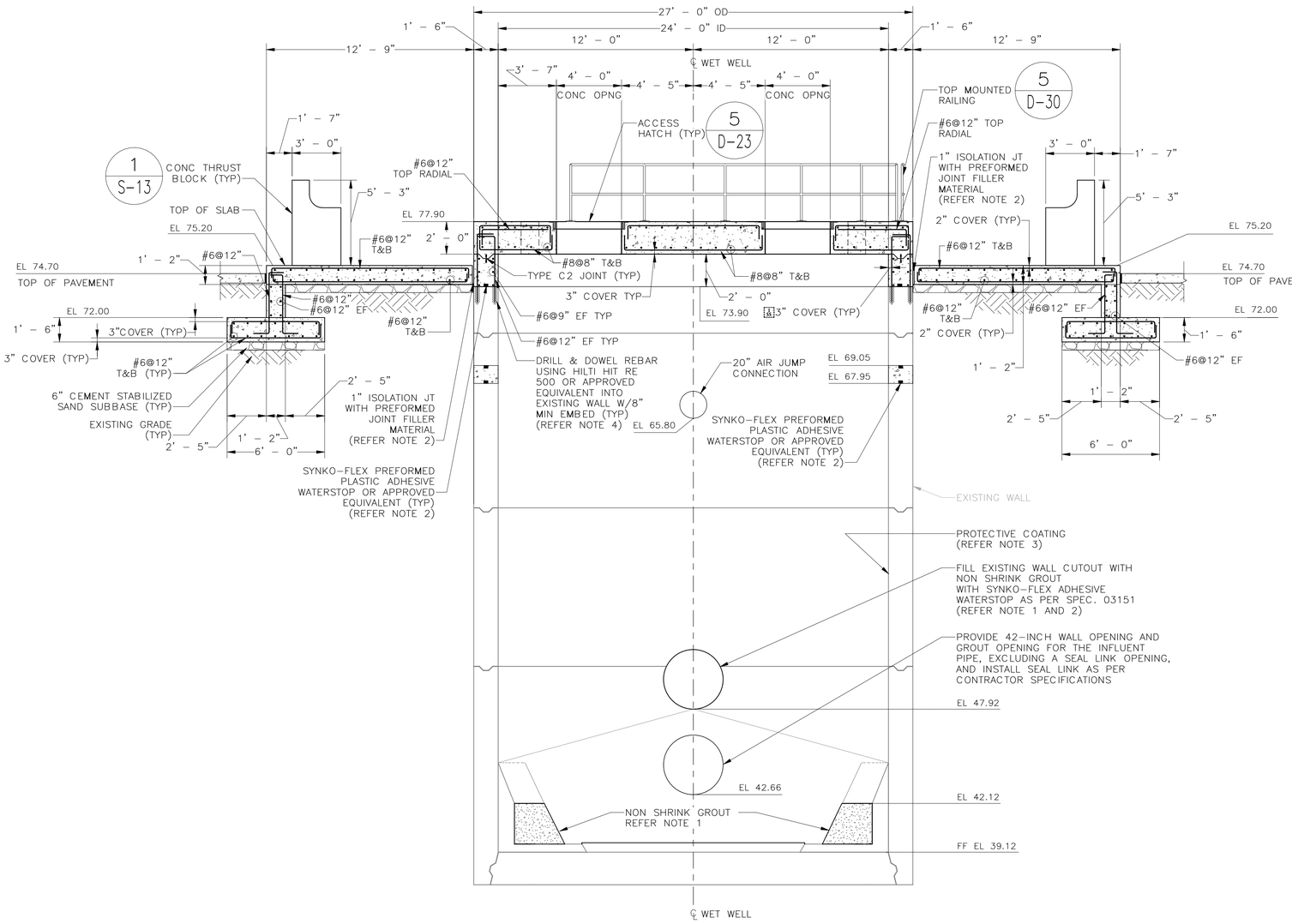

A SECTION

SCALE: 1/4" = 1'–0"

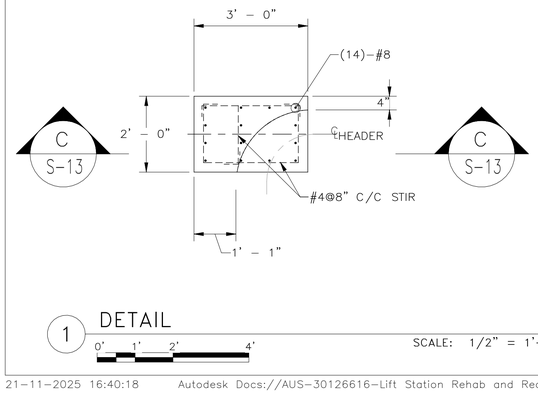

1 DETAIL

SCALE: 1/2" = 1'–0"

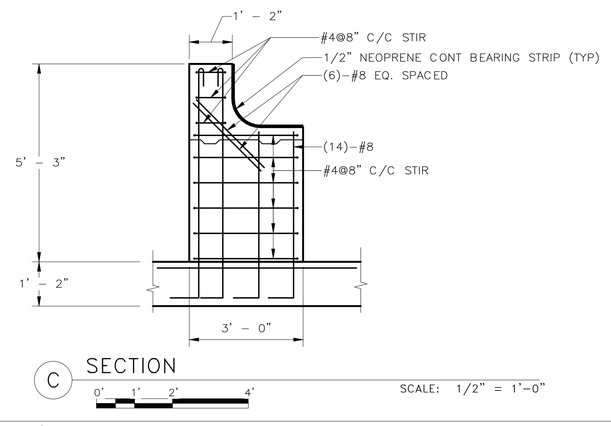

C SECTION

SCALE: 1/2" = 1'–0"

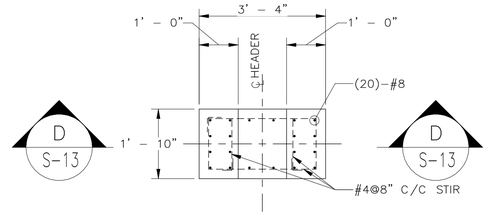

2 DETAIL

SCALE: 1/2" = 1'–0"

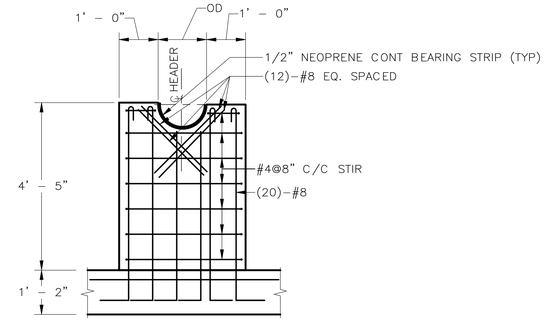

D SECTION

SCALE: 1/2" = 1'–0"

NOTES:

1. FOR NON SHRINK GROUT REFER TO COH SPEC. 03600.
2. FOR ISOLATION JT AND WATERSTOP REFER TO COH SPEC. 03151.
3. PROVIDE PROTECTIVE COATING ON ALL INTERIOR CONCRETE SURFACE OF THE WET WELL. REFER TO COH PROTECTIVE COATINGS SPEC. 09901, SYSTEM 108.
4. PRIOR TO DRILLING, LOCATE EXISTING REINFORCING STEEL IN VICINITY OF PROPOSED HOLES USING NON–DESTRUCTIVE METHODS. IF REINFORCING CONFLICTS WITH PROPOSED HOLE LOCATION, OBTAIN ENGINEER'S APPROVAL OF ALTERNATE HOLE LOCATION TO AVOID DRILLING THROUGH OR DAMAGING EXISTING REINFORCING BARS.

NO.	DATE	REVISIONS	APP.

ARCADIS
Infrastructure. Water. Environment. Buildings
1330 Post Oak Blvd,Suite 2250
Houston, TX 77056
Tel: 713–953–4800
Fax: 713–977–4620
www.arcadis.com
Texas Registered Engineering Firm F–533

SURVEYED BY: AMANI ENGR.

FB NO. P–6335

STATE OF TEXAS
TANVIR HOSSAIN
121767
LICENSED
PROFESSIONAL ENGINEER

CITY OF HOUSTON

HOUSTON PUBLIC WORKS

LIFT STATION REHABILITATION & RECONSTRUCTION CONSENT DECREE

CHERRY OAK LIFT STATION WET WELL SECTION

S–13

WBS NUMBER	FOR CITY OF HOUSTON USE ONLY
R–000267–0175–4	
DRAWING SCALE	
AS NOTED	
CITY OF HOUSTON PM	
NP NAWARAJ PANTA, P.E	
SHEET NO : 89 OF 312	

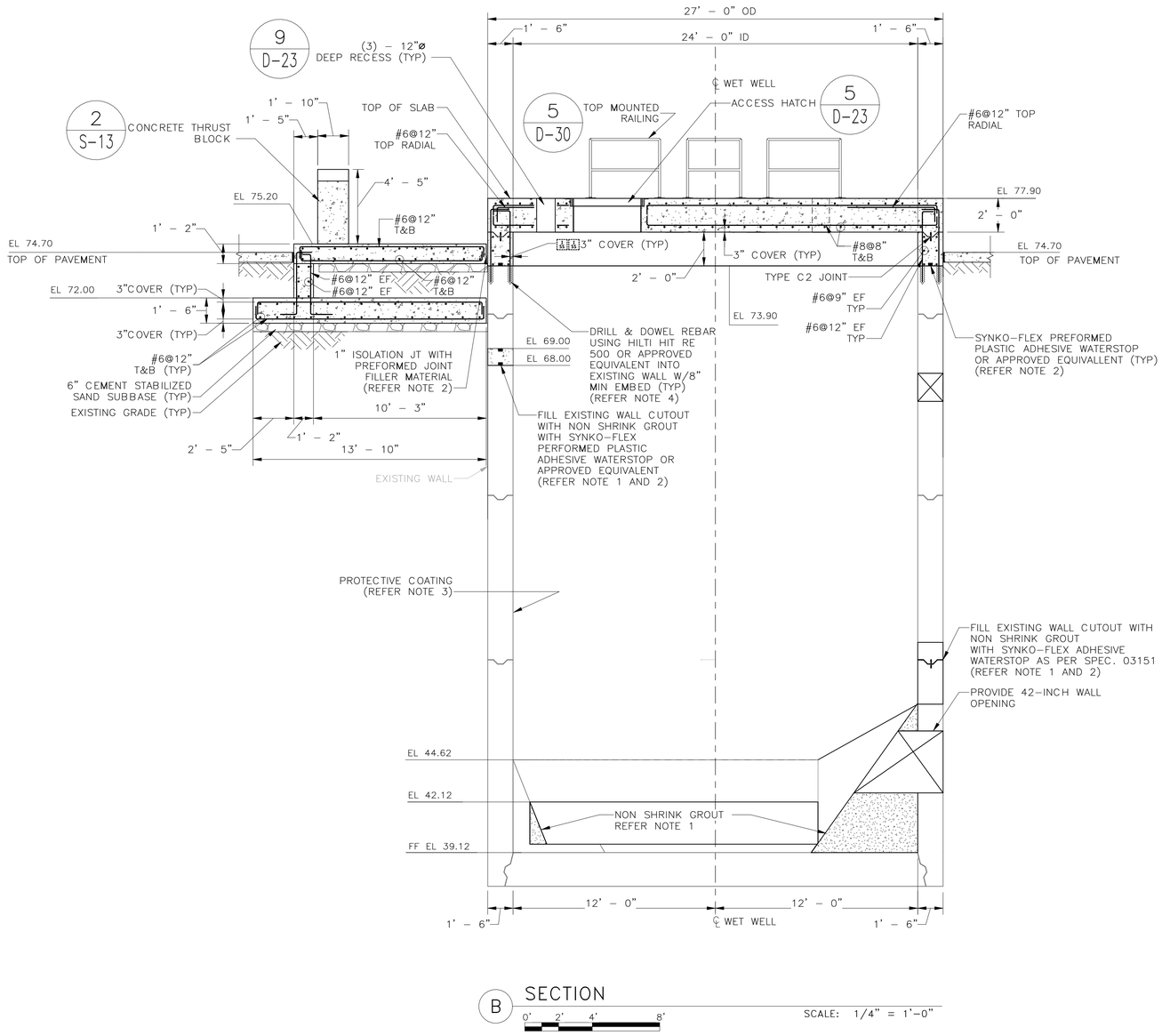

B SECTION

0' 2' 4' 8'

SCALE: 1/4" = 1'–0"

NO.	DATE	REVISIONS	APP.

NOTES:

1. FOR NON SHRINK GROUT REFER TO COH SPEC. 03600.
2. FOR ISOLATION JT AND WATERSTOP REFER TO COH SPEC. 03151.
3. PROVIDE PROTECTIVE COATING ON ALL INTERIOR CONCRETE SURFACE OF THE WET WELL. REFER TO COH PROTECTIVE COATINGS SPEC. 09901, SYSTEM 108.
4. PRIOR TO DRILLING, LOCATE EXISTING REINFORCING STEEL IN VICINITY OF PROPOSED HOLES USING NON–DESTRUCTIVE METHODS. IF REINFORCING CONFLICTS WITH PROPOSED HOLE LOCATION, OBTAIN ENGINEER'S APPROVAL OF ALTERNATE HOLE LOCATION TO AVOID DRILLING THROUGH OR DAMAGING EXISTING REINFORCING BARS.

ARCADIS
Infrastructure. Water. Environment. Buildings
1330 Post Oak Blvd,Suite 2250
Houston, TX 77056
Tel: 713–953–4800
Fax: 713–977–4620
www.arcadis.com
Texas Registered Engineering Firm F–533

SURVEYED BY: AMANI ENGR.

FB NO. P–6335

STATE OF TEXAS
TANVIR HOSSAIN
121767
LICENSED
PROFESSIONAL ENGINEER

CITY OF HOUSTON

HOUSTON PUBLIC WORKS

LIFT STATION REHABILITATION & RECONSTRUCTION
CONSENT DECREE

CHERRY OAK LIFT STATION
WET WELL
SECTION

S–14

WBS NUMBER	FOR CITY OF HOUSTON USE ONLY
R–000267–0175–4	
DRAWING SCALE	
1/4" = 1'–0"	
CITY OF HOUSTON PM	
NP NAWARAJ PANTA, P.E	
SHEET NO : 90 OF 312	

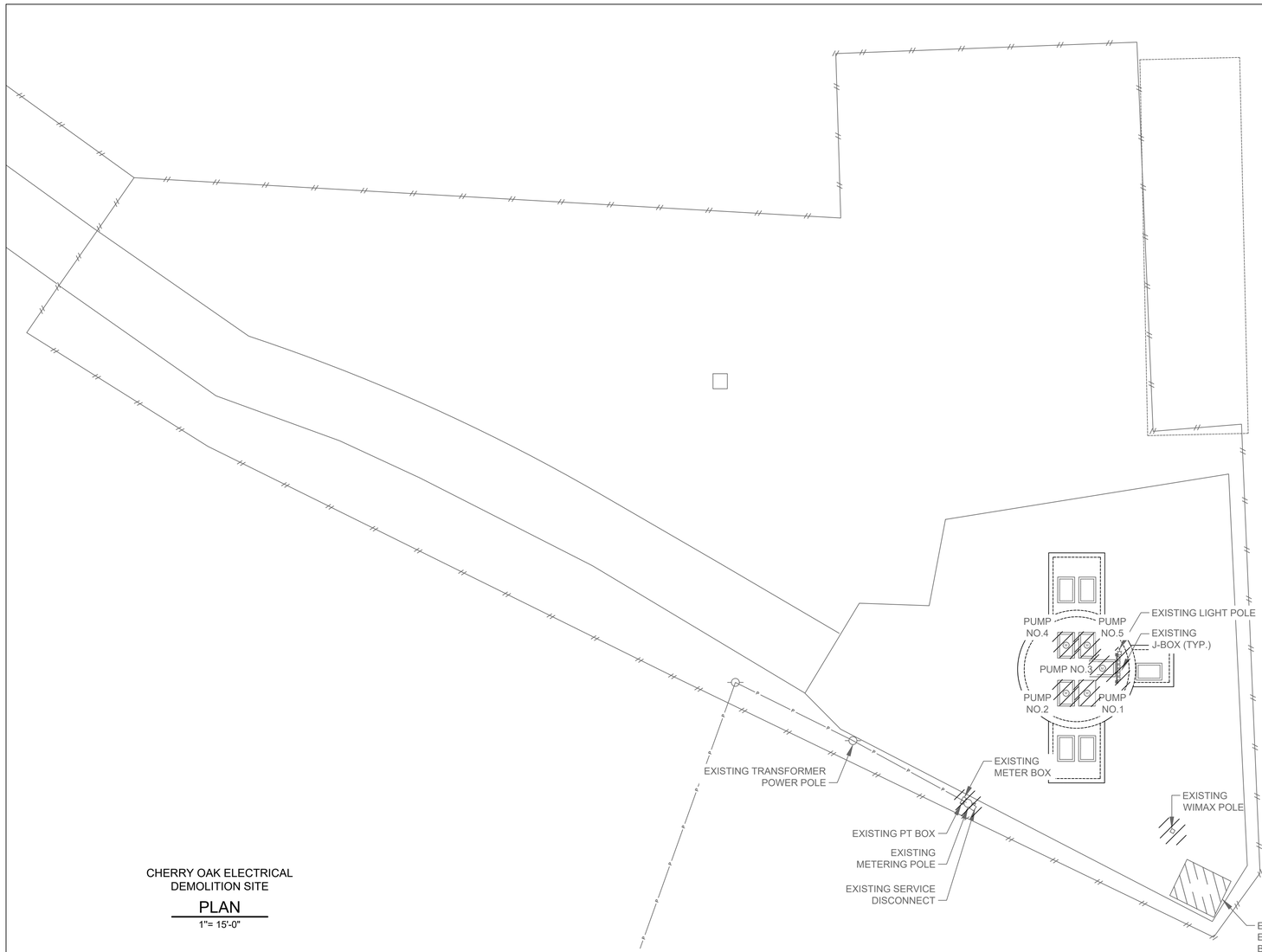

CHERRY OAK ELECTRICAL DEMOLITION SITE

PLAN

1"= 15'-0"

N

15'

SCALE: 1"=15'

NOTES BY SYMBOL "(#)":

(1) EXISTING ELECTRICAL SERVICE POLE, METER, PT BOX AND MAIN DISCONNECT SWITCH TO BE DEMOLISHED AND REMOVED.

(2) EXISTING WIMAX POLE, CONDUITS AND WIRES TO BE DEMOLISHED AND REMOVED.

(3) EXISTING MCC, ASSOCIATED CONDUITS AND WIRES IN ELECTRICAL BUILDING TO BE DEMOLISHED AND REMOVED.

(4) EXISTING CONTROL PANEL, ASSOCIATED CONDUITS AND WIRES IN ELECTRICAL BUILDING TO BE DEMOLISHED AND REMOVED.

(5) EXISTING ELECTRICAL EQUIPMENT AND DEVICE (PUMP J-BOXES), LIGHTING INCLUDING POLE FIXTURE IN LIFT STATION TO BE DEMOLISHED AND REMOVED.

NO.	DATE	REVISION	APP.

LEGEND:

ITEMS TO BE DEMOLISHED.

EXISTING METERING POLE

PHOTOGRAPH A - NTS (1)

EXISTING SERVICE DISCONNECT SWITCH

PHOTOGRAPH B - NTS (1)

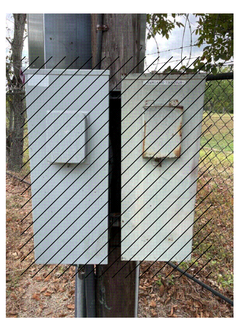

EXISTING METERING AND PT BOX

PHOTOGRAPH C - NTS (1)

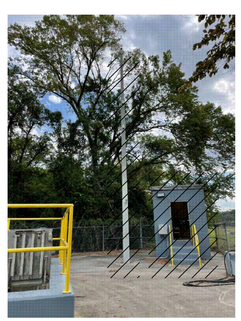

EXISTING WIMAX POLE AND ELECTRICAL BUILDING

PHOTOGRAPH D - NTS (2)

EXISTING PUMP J-BOX AND LIGHT POLE

PHOTOGRAPH E - NTS (5)

EXISTING CONTROL PANEL IN ELECTRICAL BUILDING

PHOTOGRAPH F - NTS (4)

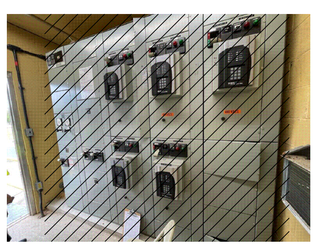

EXISTING MCC IN ELECTRICAL BUILDING

PHOTOGRAPH G - NTS (3)

GAI
Gupta & Associates, Inc.
CONSULTING ENGINEERING
Registration No. F-2593
302 Dennis St.,
Houston, Texas 77006
Tel: 713-636-2936
Fax: 713-636-2987
email: hforouzan@gaiconsulting.com

ARCADIS
Infrastructure · Water · Environment · Buildings
1330 Post Oak Blvd, Suite 2250
Houston, TX 77056
Tel: 713-953-4800
Fax: 713-977-4620
www.arcadis.com
Texas Registered Engineering Firm F-533

SURVEYED BY: AMANI ENGR.

FB NO. P-6335

STATE OF TEXAS
H. A. FOROUZAN
77748
REGISTERED PROFESSIONAL ENGINEER
11/18/2025

CITY OF HOUSTON

HOUSTON PUBLIC WORKS

LIFT STATION REHABILITATION & RECONSTRUCTION CONSENT DECREE

CHERRY OAK LIFT STATION ELECTRICAL DEMOLITION SITE PLAN

E-13

WBS NUMBER	FOR CITY OF HOUSTON USE ONLY
R-000267-0175-4	
DRAWING SCALE	
1" = 15'-0"	
CITY OF HOUSTON PM	
NP NAWARAJ PANTA, P.E.	
SHEET NO. 91 OF 312	

FILE PATH: O:\H8103_Houston Lift Station Removal And Replacement (CMAR)\6 Drawings\Electrical\Working\Cherry Oak\Cherry Oak_E-01.dwg
PLOT STYLE: COH.ctb PLOTTED: 11/21/2025 9:09 PM

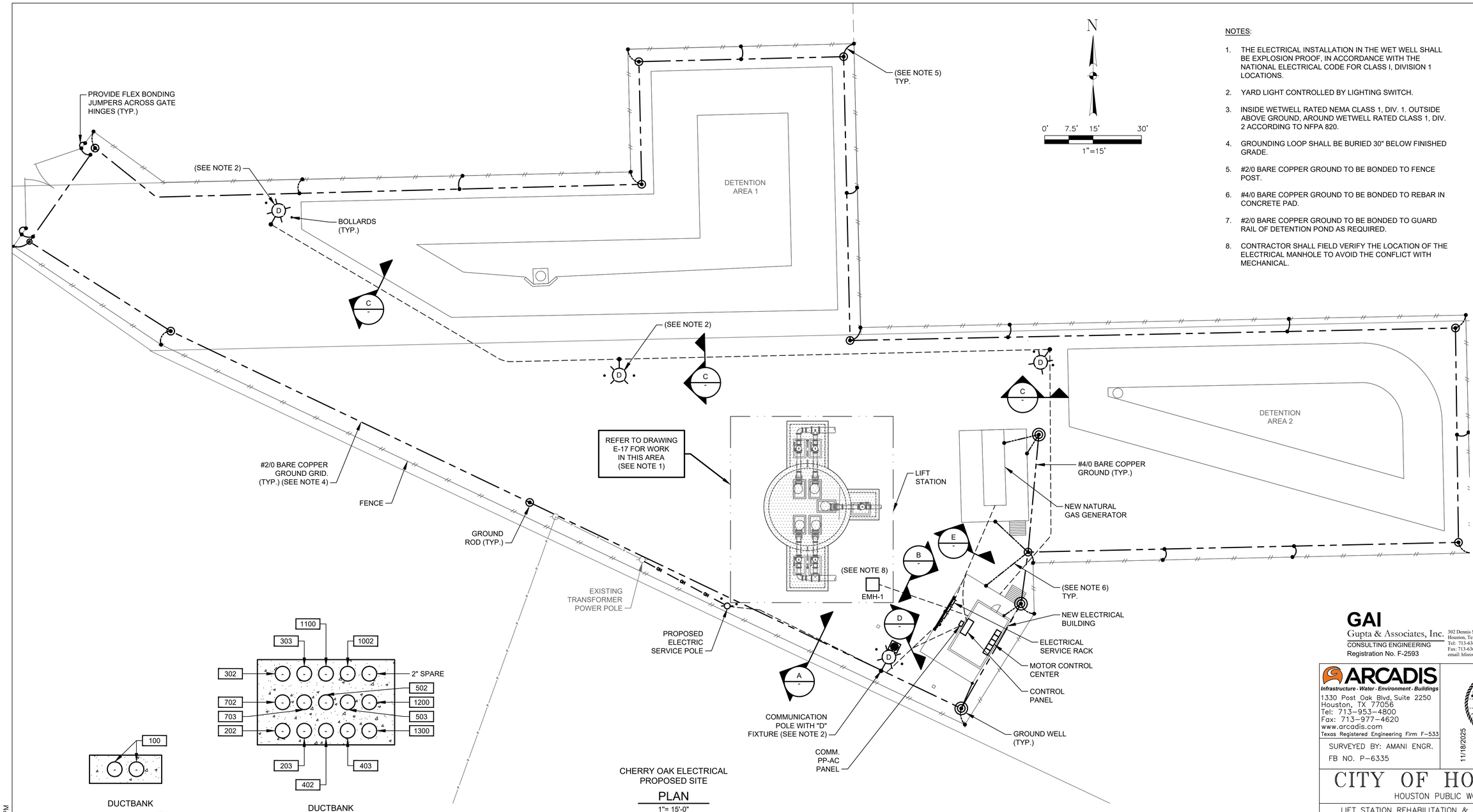

CHERRY OAK ELECTRICAL
PROPOSED SITE
PLAN
1"= 15'-0"

DUCTBANK
SECTION A
NTS

DUCTBANK
SECTION B
NTS

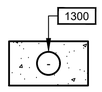

DUCTBANK
SECTION C
NTS

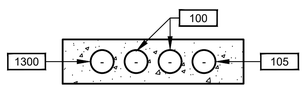

DUCTBANK
SECTION D
NTS

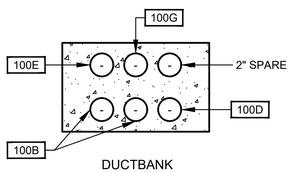

DUCTBANK
SECTION E
NTS

NOTES:

1. THE ELECTRICAL INSTALLATION IN THE WET WELL SHALL BE EXPLOSION PROOF, IN ACCORDANCE WITH THE NATIONAL ELECTRICAL CODE FOR CLASS I, DIVISION 1 LOCATIONS.
2. YARD LIGHT CONTROLLED BY LIGHTING SWITCH.
3. INSIDE WETWELL RATED NEMA CLASS 1, DIV. 1. OUTSIDE ABOVE GROUND, AROUND WETWELL RATED CLASS 1, DIV. 2 ACCORDING TO NFPA 820.
4. GROUNDING LOOP SHALL BE BURIED 30" BELOW FINISHED GRADE.
5. #2/0 BARE COPPER GROUND TO BE BONDED TO FENCE POST.
6. #4/0 BARE COPPER GROUND TO BE BONDED TO REBAR IN CONCRETE PAD.
7. #2/0 BARE COPPER GROUND TO BE BONDED TO GUARD RAIL OF DETENTION POND AS REQUIRED.
8. CONTRACTOR SHALL FIELD VERIFY THE LOCATION OF THE ELECTRICAL MANHOLE TO AVOID THE CONFLICT WITH MECHANICAL.

NO.	DATE	REVISION	APP.

GAI
Gupta & Associates, Inc.
CONSULTING ENGINEERING
Registration No. F-2593
302 Dennis St.,
Houston, Texas 77006
Tel: 713-636-2936
Fax: 713-636-2987
email: hforouzan@gaiconsulting.com

ARCADIS
Infrastructure · Water · Environment · Buildings
1330 Post Oak Blvd, Suite 2250
Houston, TX 77056
Tel: 713-953-4800
Fax: 713-977-4620
www.arcadis.com
Texas Registered Engineering Firm F-533

SURVEYED BY: AMANI ENGR.
FB NO. P-6335

STATE OF TEXAS
H. A. FOROUZAN
77748
REGISTERED
PROFESSIONAL ENGINEER
11/18/2025

CITY OF HOUSTON
HOUSTON PUBLIC WORKS

LIFT STATION REHABILITATION & RECONSTRUCTION
CONSENT DECREE

CHERRY OAK LIFT STATION ELECTRICAL PROPOSED SITE PLAN
E-14

WBS NUMBER	FOR CITY OF HOUSTON USE ONLY
R-000267-0175-4	
DRAWING SCALE	
1" = 15'-0"	
CITY OF HOUSTON PM	
NP NAWARAJ PANTA, P.E.	
SHEET NO. 92 OF 312	

FILE PATH: O:\H8103_Houston Lift Station Removal And Replacement (CMAR)\6 Drawings\Electrical\Working\Cherry Oak\Cherry Oak_E-02.dwg
PLOT STYLE: GAI.ctb PLOTTED: 11/21/2025 9:09 PM

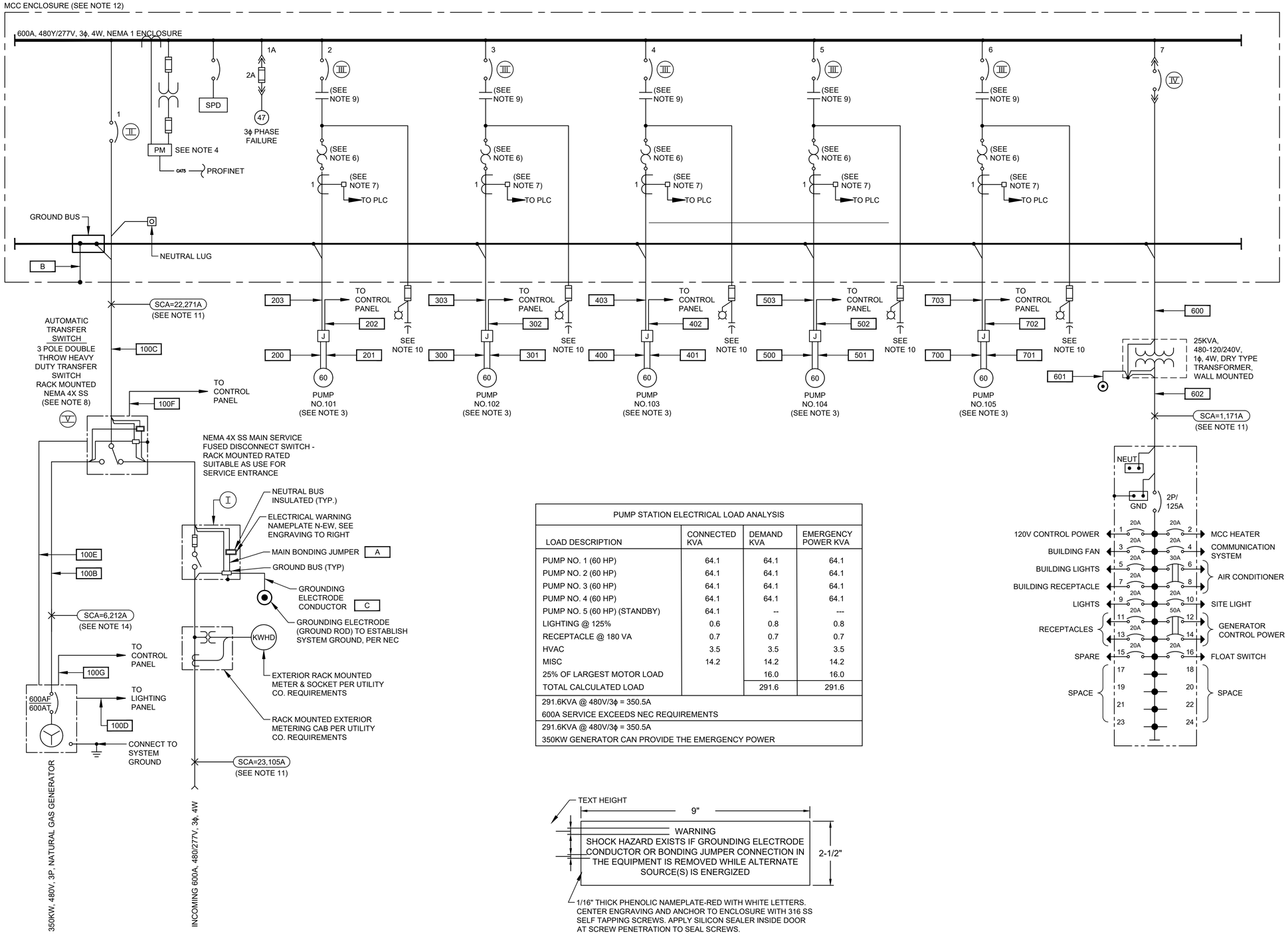

PUMP STATION ELECTRICAL LOAD ANALYSIS			
LOAD DESCRIPTION	CONNECTED KVA	DEMAND KVA	EMERGENCY POWER KVA
PUMP NO. 1 (60 HP)	64.1	64.1	64.1
PUMP NO. 2 (60 HP)	64.1	64.1	64.1
PUMP NO. 3 (60 HP)	64.1	64.1	64.1
PUMP NO. 4 (60 HP)	64.1	64.1	64.1
PUMP NO. 5 (60 HP) (STANDBY)	64.1	--	---
LIGHTING @ 125%	0.6	0.8	0.8
RECEPTACLE @ 180 VA	0.7	0.7	0.7
HVAC	3.5	3.5	3.5
MISC	14.2	14.2	14.2
25% OF LARGEST MOTOR LOAD		16.0	16.0
TOTAL CALCULATED LOAD		291.6	291.6
291.6KVA @ 480V/3ϕ = 350.5A			
600A SERVICE EXCEEDS NEC REQUIREMENTS			
291.6KVA @ 480V/3ϕ = 350.5A			
350KW GENERATOR CAN PROVIDE THE EMERGENCY POWER			

ELECTRICAL WARNING NAMEPLATE N-EW ENGRAVING

NOTES:

1. FOR DESCRIPTION AND RATINGS OF ITEMS INDICATED WITH ROMAN NUMERAL FLAGS, SEE DEVICE RATINGS SCHEDULE.
2. CONTRACTOR SHALL VERIFY ACTUAL AMPERAGES OF MOTORS AND SIZE STARTERS, MOTOR CIRCUIT PROTECTORS, ETC. ACCORDINGLY.
3. REFER TO INSTRUMENTATION DRAWINGS I-21, I-22, I-23, I-24, I-25 FOR PUMP CONTROL SCHEMATIC DIAGRAM.
4. POWER MONITOR.
5. PROVIDE FUSE ACCORDING TO MANUFACTURER'S REQUIREMENTS.
6. COMBINATION OF CT AND OVERLOAD RELAY AS REQUIRED. WHERE APPLICABLE.
7. PROVIDE 5A PRIMARY TO 4-20mA CURRENT TRANSDUCER.
8. PROVIDE A NORMALLY OPEN (NO) AUXILIARY CONTACT FOR BOTH ON POSITIONS.
9. STARTER NEMA SIZE 2 IS MINIMUM AND NEMA SIZE 3 OR GREATER SHALL BE VACUUM TYPE.
10. CONTRACTOR TO COORDINATE POWER FACTOR CORRECTION CAPACITOR SIZE WITH PUMP MANUFACTURER. MINIMUM 95% POWER FACTOR CORRECTION AT FULL LOAD. MOUNT CAPACITORS EXTERNAL ABOVE MCC ON THE APPROPRIATE SECTION.
11. POINT TO POINT METHOD IS USED FOR SHORT CIRCUIT CURRENT CALCULATION.
12. CONTRACTOR SHALL PROVIDE A PERMANENTLY AFFIXED LABEL (2" X 3") SHOWING THE AVAILABLE FAULT CURRENT AND CALCULATION DATE. THE LABEL SHALL BE BLUE LETTERING ON A CONTRASTING BACKGROUND.
13. THE INSULATION TYPES OF ALL ELECTRICAL CONDUCTORS USED IN THE PROJECT HAVE BEEN SPECIFIED IN ELECTRICAL SPECIFICATIONS (16120, 16121, AND 16122). THE TYPES OF CONDUITS USED IN THE PROJECT HAS BEEN SPECIFIED IN ELECTRICAL SPECIFICATIONS 16111.
14. THE INFORMATION IS PROVIDED BY GENERATOR MANUFACTURER (CUMMINS).

GAI
Gupta & Associates, Inc.
CONSULTING ENGINEERING
Registration No. F-2593
302 Dennis St., Houston, Texas 77006
Tel: 713-636-2936
Fax: 713-636-2987
email: hforouzan@gaiconsulting.com

ARCADIS
Infrastructure · Water · Environment · Buildings
1330 Post Oak Blvd, Suite 2250
Houston, TX 77056
Tel: 713-953-4800
Fax: 713-977-4620
www.arcadis.com
Texas Registered Engineering Firm F-533

SURVEYED BY: AMANI ENGR.
FB NO. P-6335

STATE OF TEXAS
H. A. FOROUZAN
77748
REGISTERED PROFESSIONAL ENGINEER
02/27/2026

CITY OF HOUSTON
HOUSTON PUBLIC WORKS

LIFT STATION REHABILITATION & RECONSTRUCTION CONSENT DECREE

CHERRY OAK LIFT STATION ELECTRICAL SINGLE-LINE DIAGRAM

E-15

WBS NUMBER	FOR CITY OF HOUSTON USE ONLY
R-000267-0175-3	
DRAWING SCALE	
NONE	
CITY OF HOUSTON PM	
NP NAWARAJ PANTA, P.E.	
SHEET NO. 93 OF 312	

NO.	DATE	REVISION	APP.

FILE PATH: O:\H8103_Houston Lift Station Removal And Replacement (CMAR)\6 Drawings\Electrical\Working\Cherry Oak\Permitting\Cherry Oak_E-03.dwg
PLOT STYLE: GAI.ctb PLOTTED: 2/27/2026 8:49 AM

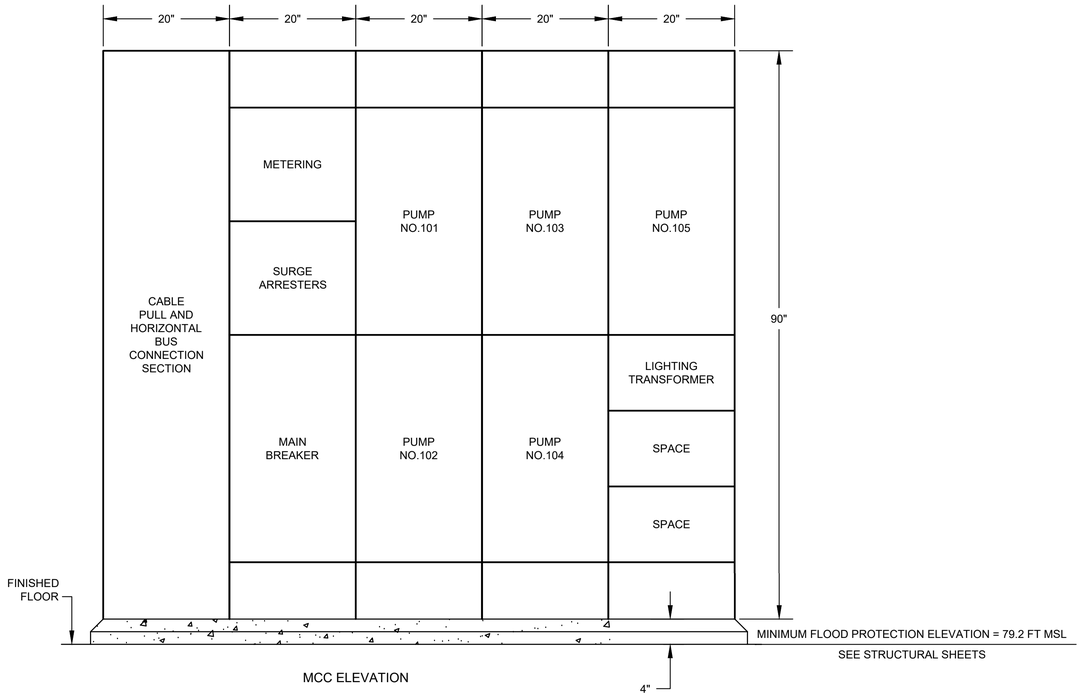

MCC ELEVATION

DETAIL 1
NTS. -

ITEM	CIRCUIT	DESCRIPTION	RATINGS FOR PUMP SIZES INDICATED
I	--	MAIN DISCONNECT SWITCH	
		OPERATING VOLTAGE	480V
		CURRENT RATING	600A
		CURRENT LIMITING	CLASS L
		FUSES TYPE & SIZE	600A
II	1	MAIN BREAKER	
		3 POLE - TYPE	MOLDED CASE
		MOUNTING	FIXED
		OPERATING VOLTAGE	480V
		FRAME SIZE	600A
		TRIP SETTING	600A
		INTERRUPT CAPACITY	65KA SYM
		OPTIONS	NONE
III	2 3 4 5 6	PUMP MOTOR STARTERS	
		QUANTITY	5
		MOUNTING	FIXED
		SHORT CIRCUIT PROTECTION	
		3 POLE - TYPE	MCP
		OPERATING VOLTAGE	480V
		FRAME SIZE	150A
		TRIP SETTING	FIELD ADJ
		INTERRUPT CAPACITY	65KA SYM
		MOTOR STARTING CONTACTOR	
		3 POLE - TYPE	VACUUM
		OPERATING VOLTAGE	480V
		SIZE	NEMA 4
		OVERLOAD PROTECTION TYPE	SOLID STATE MOR
		CT RATIO	100:5
IV	7	LIGHTING TRANSFORMER FEEDER BREAKER	
		NO. OF POLES	2
		TYPE	MOLDED CASE
		OPERATING VOLTAGE	480V
		FRAME SIZE	100A
		TRIP SETTING	70A
		INTERRUPT CAPACITY	65KA SYM
V	--	AUTOMATIC TRANSFER SWITCH	3P, 4W SN
		OPERATING VOLTAGE	480V
		CURRENT RATING	600A

NO.	DATE	REVISION	APP.

GAI
Gupta & Associates, Inc.
CONSULTING ENGINEERING
Registration No. F-2593
302 Dennis St.,
Houston, Texas 77006
Tel: 713-636-2936
Fax: 713-636-2987
email: hforouzan@gaiconsulting.com

ARCADIS
Infrastructure · Water · Environment · Buildings
1330 Post Oak Blvd, Suite 2250
Houston, TX 77056
Tel: 713-953-4800
Fax: 713-977-4620
www.arcadis.com
Texas Registered Engineering Firm F-533

SURVEYED BY: AMANI ENGR.
FB NO. P-6335

STATE OF TEXAS
H. A. FOROUZAN
77748
REGISTERED PROFESSIONAL ENGINEER
11/18/2025

CITY OF HOUSTON

HOUSTON PUBLIC WORKS

LIFT STATION REHABILITATION & RECONSTRUCTION
CONSENT DECREE

CHERRY OAK LIFT STATION MCC ELEVATION & DEVICE RATING SCHEDULE

E-16

WBS NUMBER	FOR CITY OF HOUSTON USE ONLY
R-000267-0175-4	
DRAWING SCALE	
AS SHOWN	
CITY OF HOUSTON PM	
NP NAWARAJ PANTA, P.E.	
SHEET NO. 94 OF 312	

FILE PATH: O:\H8103_Houston Lift Station Removal And Replacement (CMAR)\5 Construction Phase\Addenda\Addendum No.1\Cherry Oak\Cherry Oak_E-04.dwg
PLOT STYLE: GAI.ctb PLOTTED: 1/14/2026 3:11 PM

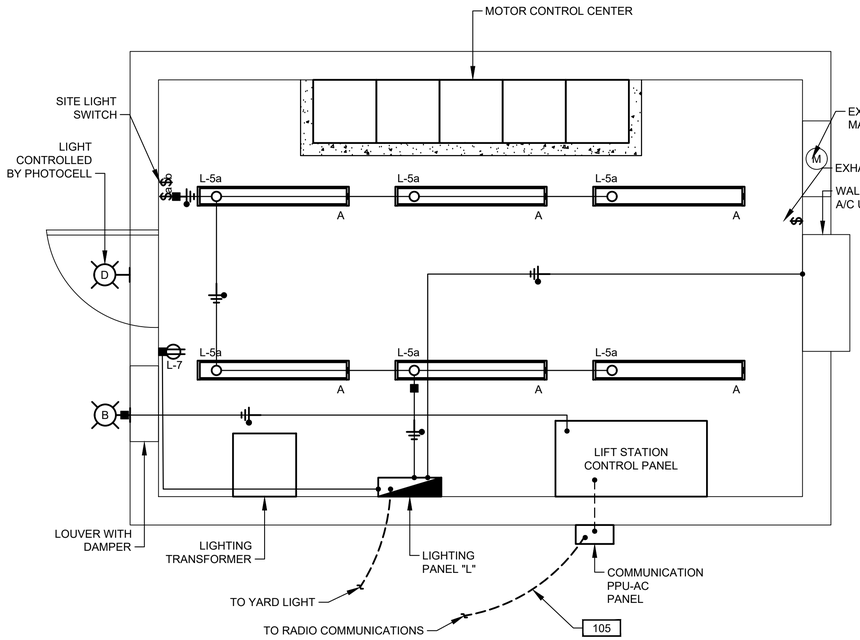

LIGHTING & COMMUNICATION SYSTEM PLAN

1/2"=1'-0"

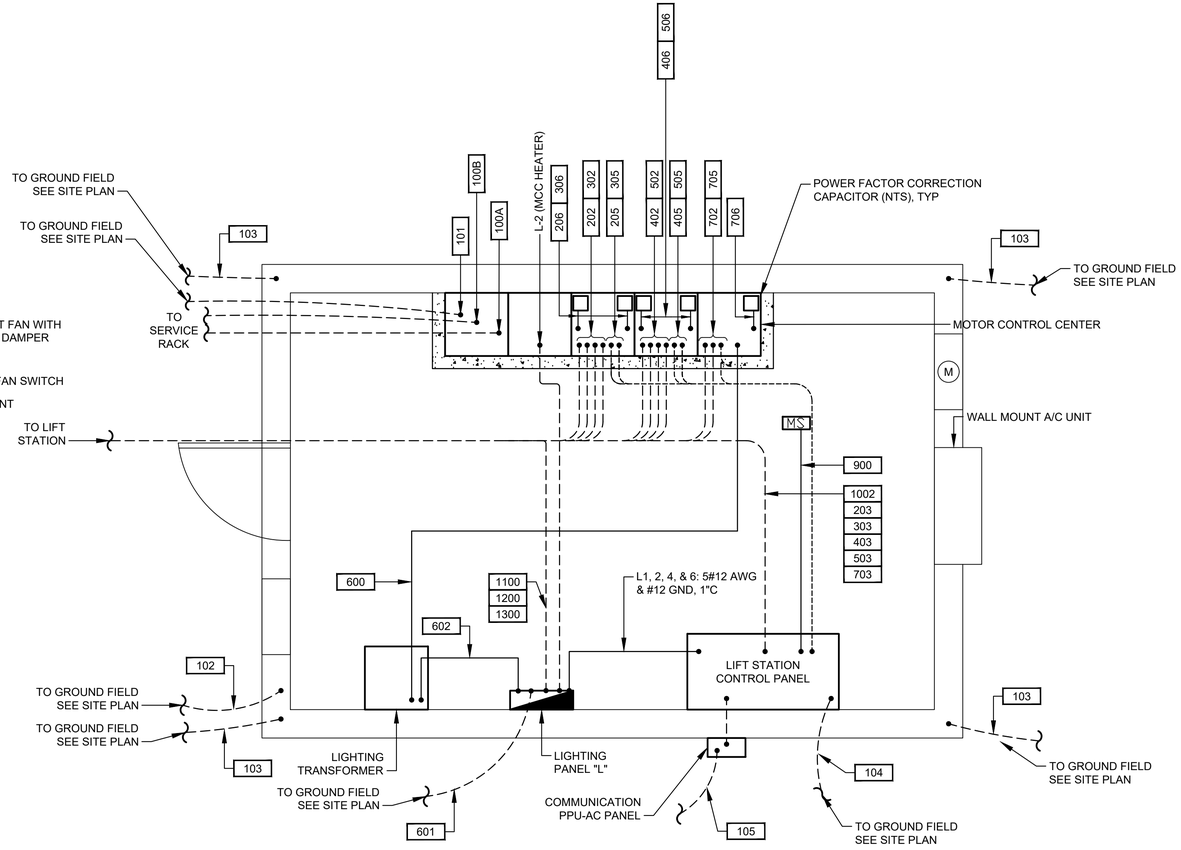

POWER PLAN

1/2"=1'-0"

GENERAL NOTES:

1. REFER TO SHEET D-34 & D-35 FOR LEVEL TRANSMITTER & FLOAT SWITCH MOUNTING.

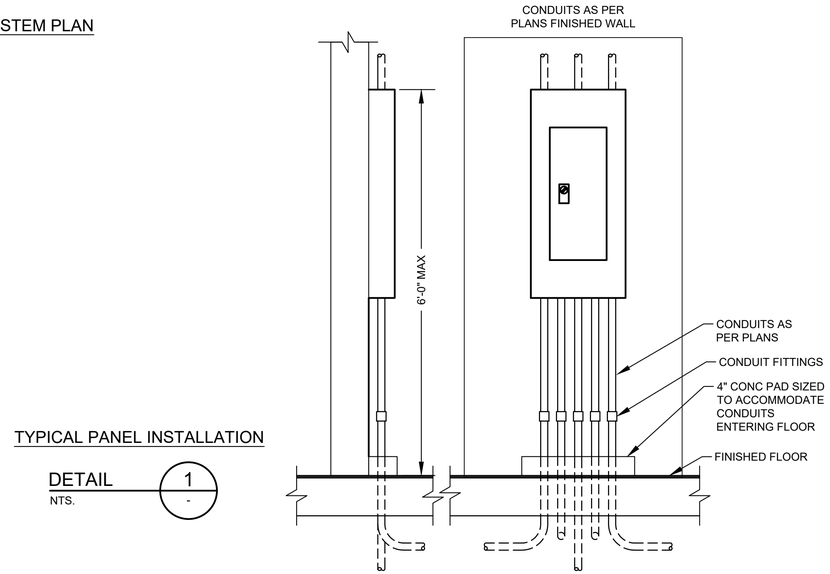

SIDE ELEVATION FRONT ELEVATION

TYPICAL PANEL INSTALLATION

DETAIL 1 / -

NTS.

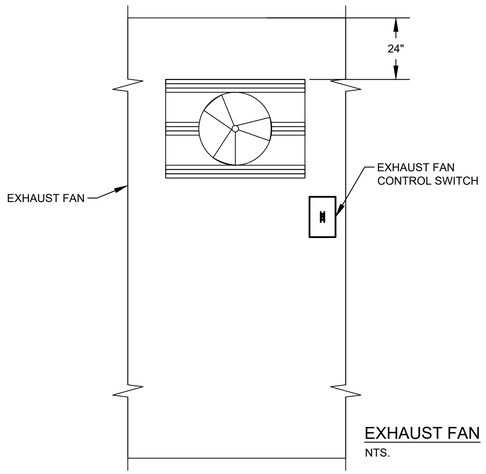

EXHAUST FAN

NTS.

NO.	DATE	REVISION	APP.

GAI
Gupta & Associates, Inc.
CONSULTING ENGINEERING
Registration No. F-2593
302 Dennis St., Houston, Texas 77006
Tel: 713-636-2936
Fax: 713-636-2987
email: hforouzan@gaiconsulting.com

ARCADIS
Infrastructure · Water · Environment · Buildings
1330 Post Oak Blvd, Suite 250
Houston, TX 77056
Tel: 713-953-4800
Fax: 713-977-4620
www.arcadis.com
Texas Registered Engineering Firm F-533

STATE OF TEXAS
H. A. FOROUZAN
77748
REGISTERED PROFESSIONAL ENGINEER
11/18/2025

SURVEYED BY: AMANI ENGR.
FB NO. P-6335

CITY OF HOUSTON

HOUSTON PUBLIC WORKS

LIFT STATION REHABILITATION & RECONSTRUCTION CONSENT DECREE

CHERRY OAK LIFT STATION ELECTRICAL BUILDING PLAN

E-17

WBS NUMBER	FOR CITY OF HOUSTON USE ONLY
R-000267-0175-4	
DRAWING SCALE	
AS SHOWN	
CITY OF HOUSTON PM	
NP NAWARAJ PANTA, P.E.	
SHEET NO. 95 OF 312	

FILE PATH: O:\H8103_Houston Lift Station Removal And Replacement (CMAR)\6 Drawings\Electrical\Working\Cherry Oak\Cherry Oak_E-05.dwg
PLOT STYLE: GAI.ctb PLOTTED: 11/21/2025 9:10 PM

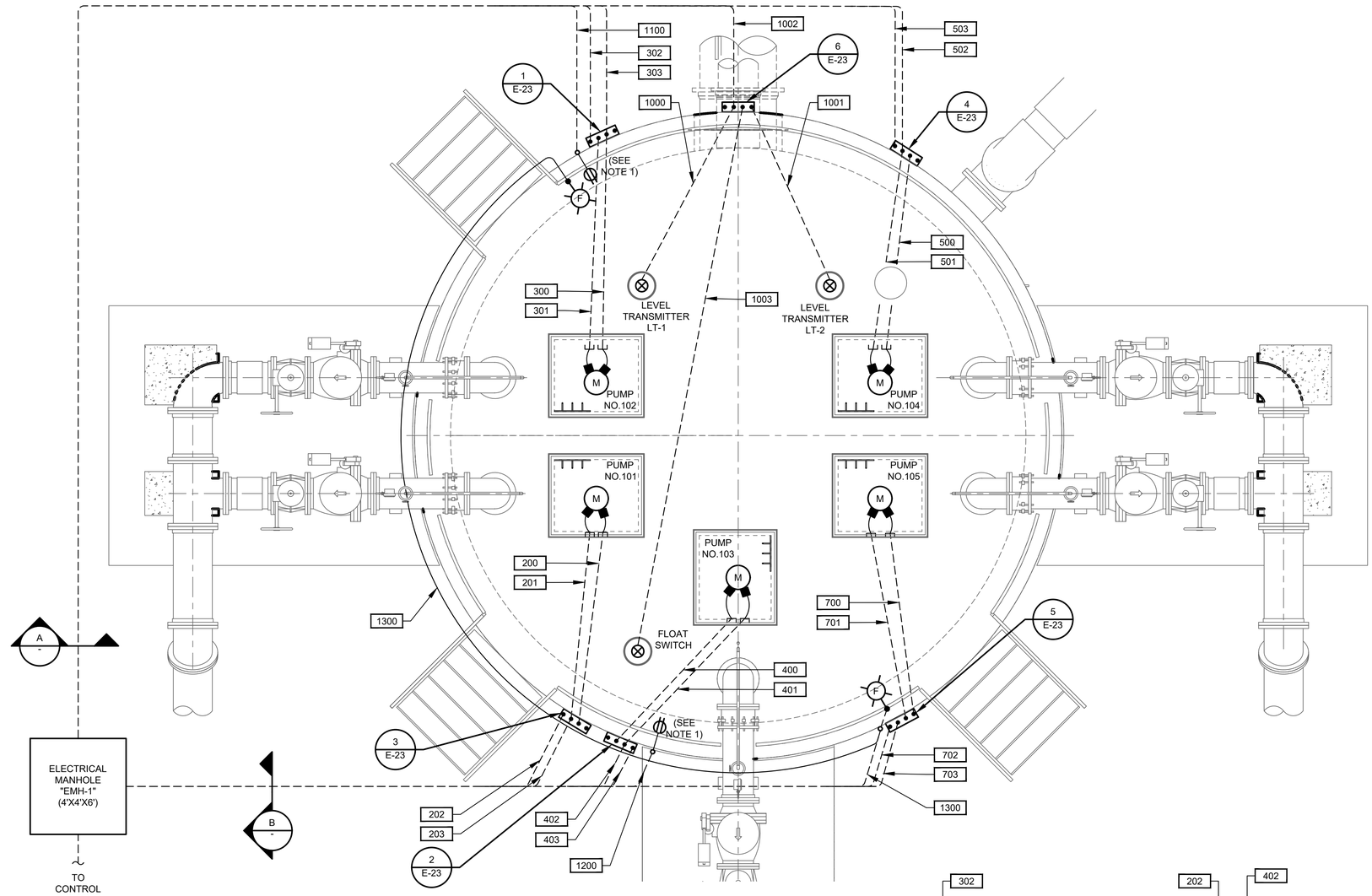

CHERRY OAK LIFT STATION
ENLARGED PLAN

PLAN

3/8"=1'-0"

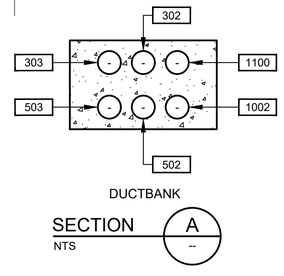

DUCTBANK

SECTION A
NTS

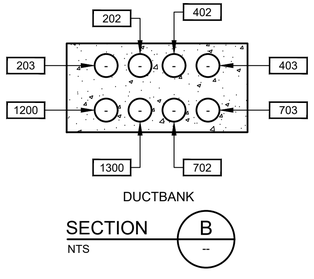

DUCTBANK

SECTION B
NTS

N

1 0 2 4

SCALE: 3/8" = 1'-0"

NO.	DATE	REVISION	APP.

NOTES:

1. EXPLOSION-PROOF RECEPTACLE TO BE MOUNT ON GUARDRAIL AT 42" ABOVE TOP SLAB.

GAI
Gupta & Associates, Inc.
CONSULTING ENGINEERING
Registration No. F-2593
302 Dennis St.,
Houston, Texas 77006
Tel: 713-636-2936
Fax: 713-636-2967
email: hforouzan@gaiconsulting.com

ARCADIS
Infrastructure · Water · Environment · Buildings
1330 Post Oak Blvd, Suite 2250
Houston, TX 77056
Tel: 713-953-4800
Fax: 713-977-4620
www.arcadis.com
Texas Registered Engineering Firm F-533

SURVEYED BY: AMANI ENGR.

FB NO. P-6335

STATE OF TEXAS
H. A. FOROUZAN
77748
REGISTERED
PROFESSIONAL ENGINEER

11/18/2025

CITY OF HOUSTON

HOUSTON PUBLIC WORKS

LIFT STATION REHABILITATION & RECONSTRUCTION
CONSENT DECREE

CHERRY OAK LIFT STATION
ELECTRICAL ENLARGED PLAN

E-18

WBS NUMBER	FOR CITY OF HOUSTON USE ONLY
R-000267-0175-4	
DRAWING SCALE	
3/8" = 1'-0"	
CITY OF HOUSTON PM	
NP NAWARAJ PANTA, P.E.	
SHEET NO. 96 OF 312	

FILE PATH: O:\H8103_Houston Lift Station Removal And Replacement (CMAR)\6 Drawings\Electrical\Working\Cherry Oak\Cherry Oak_E-06.dwg
PLOT STYLE: GAI.ctb PLOTTED: 11/18/2025 5:47 PM

	DESCRIPTION	SERVICE		ROUTING			CONDUIT & WIRE SIZE
		VOLTAGE	AMPS OR HP	FROM	TO	VIA	
A	MAIN BONDING JUMPER	--	--	MAIN FUSED DISCONNECT NEUTRAL	MAIN FUSED DISCONNECT GROUND	--	2/0 GND.
B	EQUIPMENT BONDING JUMPER	--	--	MCC/POWER PANEL ENCLOSURE	POWER/CONTROL PANEL & EQUIPMENT GROUNDING	--	2/0 GND.
C	GROUNDED ELECTRODE CONDUCTOR	--	--	GROUNDING ELECTRODE	MAIN SERVICE FUSED DISCONNECT	--	2/0 GND.
100	UTILITY 480V SERVICE POWER	480V	600A	SERVICE POLE	CT CAN		2 SETS OF 3 #350MCM, #1/0 NEUT., #1/0 GND., 3"C. EA.
100A	UTILITY POWER ENTRANCE	480V	600A	SERVICE DISCONNECT SWITCH	ATS	--	2 SETS OF 3 #350MCM, #1/0 NEUT., #1/0 GND., 3"C. EA.
100B	GENERATOR POWER ENTRANCE	480V	600A	STANDBY GENERATOR	ATS	--	2 SETS OF 3 #350MCM, #1/0 NEUT., #1/0 GND., 3"C. EA.
100C	480V POWER	480V	600A	ATS	MAIN BREAKER IN MCC	--	2 SETS OF 3 #350MCM, #1/0 NEUT., #1/0 GND., 3"C. EA.
100D	GENERATOR CONTROL POWER	120/240V	50A	STANDBY GENERATOR	LIGHTING PANEL	--	3#4 AWG., #8 GND., 1-1/2"C.
100E	GENERATOR CONTROLS	24VDC	--	STANDBY GENERATOR	ATS	--	6#14 AWG., #14 GND., 3/4"C.
100F	NORMAL/EMERGENCY POWER STATUS	24VDC	--	ATS	CONTROL PANEL	--	4#14 AWG., #14 GND., 3/4"C.
100G	GENERATOR ANNUNCIATOR	24VDC	--	STANDBY GENERATOR	CONTROL PANEL	--	16#14 AWG., #14 GND., 1"C.
101	GROUND ELECTRODE CONDUCTOR	--	--	POWER PANEL	GROUND FIELD	--	2/0 GND.
102	GROUND ELECTRODE CONDUCTOR	--	--	BUILDING STEEL	GROUND FIELD	--	2/0 GND.
103	BUILDING GROUNDING	--	--	BUILDING REBAR	LIGHTNING GROUND ROD	--	2/0 GND.
104	GROUND ELECTRODE CONDUCTOR	--	--	CONTROL PANEL OR MOTOR CONTROL CENTER	GROUND FIELD	--	2/0 GND.
105	COMMUNICATION	--	--	COMMUNICATION POLE	CONTROL PANEL	--	1-1/2"C. CAT-5E
200	PUMP NO. 101 POWER	480V	60HP	PUMP NO. 101	PUMP NO. 101 JUNCTION BOX	--	MANUFACTURER CABLE IN 2-1/2"C.
201	PUMP NO. 101 CONTROLS	120V	--	PUMP NO. 101	PUMP NO. 101 JUNCTION BOX	--	MANUFACTURER CABLE IN 2-1/2"C.
202	PUMP NO. 101 POWER	480V	60HP	PUMP NO. 101 JUNCTION BOX	PUMP STARTER	--	3#1, #6 GND., 2" C.
203	COMBINED PUMP CONTROLS	120V	--	PUMP NO. 101 JUNCTION BOX	CONTROL PANEL	--	5#14, 1"C.
205	PUMP NO. 101 CONTROLS	120V	--	STARTER IN MOTOR CONTROL CENTER	CONTROL PANEL	--	12#14 1"C.
206	PUMP NO. 101 CAPACITOR	480V	TBD	PUMP NO. 101 MOTOR STARTER	POWER FACTOR CORRECTION CAPACITOR	--	3#8, #10 GND., 3/4"C.
300	PUMP NO. 102 POWER	480V	60HP	PUMP NO. 102	PUMP NO. 102 JUNCTION BOX	--	MANUFACTURER CABLE IN 2-1/2"C.
301	PUMP NO. 102 CONTROLS	120V	--	PUMP NO. 102	PUMP NO. 102 JUNCTION BOX	--	MANUFACTURER CABLE IN 2-1/2"C.
302	PUMP NO. 102 POWER	480V	60HP	PUMP NO. 102 JUNCTION BOX	PUMP STARTER	--	3#1, #6 GND., 2" C.
303	PUMP NO. 102 CONTROLS	120V	--	PUMP NO. 102 JUNCTION BOX	CONTROL PANEL	--	5#14, 1"C.
305	PUMP NO. 102 CONTROLS	120V	--	STARTER IN MOTOR CONTROL CENTER	CONTROL PANEL	--	12#14 1"C.
306	PUMP NO. 102 CAPACITOR	480V	TBD	PUMP NO. 102 MOTOR STARTER	POWER FACTOR CORRECTION CAPACITOR	--	3#8, #10 GND., 3/4"C.
400	PUMP NO. 103 POWER	480V	60HP	PUMP NO. 103	PUMP NO. 103 JUNCTION BOX	--	MANUFACTURER CABLE IN 2-1/2"C.
401	PUMP NO. 103 CONTROLS	120V	--	PUMP NO. 103	PUMP NO. 103 JUNCTION BOX	--	MANUFACTURER CABLE IN 2-1/2"C.
402	PUMP NO. 103 POWER	480V	60HP	PUMP NO. 103 JUNCTION BOX	PUMP STARTER	--	3#1, #6 GND., 2" C.
403	PUMP NO. 103 CONTROLS	120V	60HP	PUMP NO. 103 JUNCTION BOX	CONTROL PANEL	--	5#14, 1"C.
405	PUMP NO. 103 CONTROLS	120V	--	STARTER IN MOTOR CONTROL CENTER	CONTROL PANEL	--	12#14 1"C.
406	PUMP NO. 103 CAPACITOR	480V	TBD	PUMP NO. 103 MOTOR STARTER	POWER FACTOR CORRECTION CAPACITOR	--	3#8, #10 GND., 3/4" C.
500	PUMP NO. 104 POWER	480V	60HP	PUMP NO. 104	PUMP NO. 104 JUNCTION BOX	--	MANUFACTURER CABLE IN 2-1/2"C.
501	PUMP NO. 104 CONTROLS	120V	--	PUMP NO. 104	PUMP NO. 104 JUNCTION BOX	--	MANUFACTURER CABLE IN 2-1/2"C.
502	PUMP NO. 104 POWER	480V	--	PUMP NO. 104 JUNCTION BOX	PUMP STARTER	--	3#1, #6 GND., 2" C.
503	PUMP NO. 104 CONTROLS	120V	--	PUMP NO. 104 JUNCTION BOX	CONTROL PANEL	--	5#14, 1"C.
505	PUMP NO. 104 CONTROLS	120V	--	STARTER IN MOTOR CONTROL CENTER	CONTROL PANEL	--	12#14 1"C.
506	PUMP NO. 104 CAPACITOR	480V	TBD	PUMP NO. 104 MOTOR STARTER	POWER FACTOR CORRECTION CAPACITOR	--	3#8, #10 GND., 3/4" C.
600	LIGHTING PANEL FEEDER	480V	--	MOTOR CONTROL CENTER	LIGHTING TRANSFORMER	--	2#8, #6 GND., 1"C.
601	LIGHTING PANEL GROUND	--	--	LIGHTING PANEL	GROUND FIELD	--	#6 GND., 1"C.
602	LIGHTING PANEL FEEDER	120/240V	--	LIGHTING TRANSFORMER	LIGHTING PANEL	--	3#1, #6 GND., 1-1/2"C.
700	PUMP NO. 105 POWER	480V	60HP	PUMP NO. 105	PUMP NO. 5 JUNCTION BOX	--	MANUFACTURER CABLE IN 2-1/2"C.
701	PUMP NO. 105 CONTROLS	120V	--	PUMP NO. 105	PUMP NO. 5 JUNCTION BOX	--	MANUFACTURER CABLE IN 2-1/2"C.
702	PUMP NO. 105 POWER	480V	60HP	PUMP NO. 105 JUNCTION BOX	PUMP STARTER	--	3#1, #6 GND., 2" C.
703	PUMP NO. 105 CONTROLS	120V	--	PUMP NO. 105 JUNCTION BOX	CONTROL PANEL	--	5#14, 1"C.
705	PUMP NO. 105 CONTROLS	120V	--	STARTER IN MOTOR CONTROL CENTER	CONTROL PANEL	--	12#14 1"C.
706	PUMP NO. 105 CAPACITOR	480V	60HP	PUMP NO. 105 MOTOR STARTER	POWER FACTOR CORRECTION CAPACITOR	--	3#8, #10 GND., 3/4" C.
1000	LEVEL TRANSMITTER LT-1	24VDC	--	TRANSMITTER	TRANSMITTER JUNCTION BOX	--	MANUFACTURER CABLE IN 2-1/2"C.
1001	LEVEL TRANSMITTER LT-2	24VDC	--	TRANSMITTER	TRANSMITTER JUNCTION BOX	--	MANUFACTURER CABLE IN 2-1/2"C.
1002	COMBINED LEVEL TRANSMITTERS & FLOAT SWITCH	24VDC	--	CONTROL PANEL	TRANSMITTER JUNCTION BOX	--	2 TRI, 4 #14, 2"C.
1003	WELL FLOAT SWITCHES	24VDC	--	TRANSMITTER JUNCTION BOX	FLOAT SWITCH NO.1	--	MANUFACTURER CABLE IN 2-1/2"C.
1100	120VAC FOR RECEPTACLE	120V	--	LIGHTING PANEL	RECEPTACLE NEXT TO TRANSMITTER J-BOX	--	2 #12, #12 G, 1"C.
1200	120VAC FOR RECEPTACLE	120V	--	LIGHTING PANEL	RECEPTACLE NEXT TO PUMP NO. 103 J-BOX	--	2 #12, #12 G, 1"C.
1300	SITE LIGHTING	120V	--	LIGHTING PANEL	SITE LIGHTS	VIA SITE LIGHTING SWITCH	2#12, #12 G, 1"C.

NO.	DATE	REVISION	APP.

NOTES:

1. CONDUITS LABELED "FUTURE SPACE" ARE TO BE INSTALLED AND CAPPED IN FIELD.
2. ANY CONDUIT REQUIRING A CSBE SEAL, SHALL BE A MINIMUM SIZE OF 2 1/2".
3. ALL UNDERGROUND CONDUITS (SINGLE AND MULTI-RUN) TO BE ENCASED IN REINFORCED CONCRETE DUCTBANK.

GAI
Gupta & Associates, Inc.
CONSULTING ENGINEERING
Registration No. F-2593
302 Dennis St.,
Houston, Texas 77006
Tel: 713-636-2936
Fax: 713-636-2967
email: hforouzan@gaiconsulting.com

ARCADIS
Infrastructure · Water · Environment · Buildings
1330 Post Oak Blvd, Suite 2250
Houston, TX 77056
Tel: 713-953-4800
Fax: 713-977-4620
www.arcadis.com
Texas Registered Engineering Firm F-533

SURVEYED BY: AMANI ENGR.
FB NO. P-6335

STATE OF TEXAS
H. A. FOROUZAN
77748
REGISTERED
PROFESSIONAL ENGINEER
11/18/2025

CITY OF HOUSTON
HOUSTON PUBLIC WORKS

LIFT STATION REHABILITATION & RECONSTRUCTION
CONSENT DECREE

CHERRY OAK LIFT STATION
ELECTRICAL CONDUIT SCHEDULE

E-19

WBS NUMBER	FOR CITY OF HOUSTON USE ONLY
R-000267-0175-4	
DRAWING SCALE	
NONE	
CITY OF HOUSTON PM	
NP NAWARAJ PANTA, P.E.	
SHEET NO. 97 OF 312	

FILE PATH: O:\H8103_Houston Lift Station Removal And Replacement (CMAR)\5 Construction Phase\Addenda\Addendum No.1\Cherry Oak\Cherry Oak_E-07.dwg
PLOT STYLE: GAI.ctb PLOTTED: 1/14/2026 3:11 PM

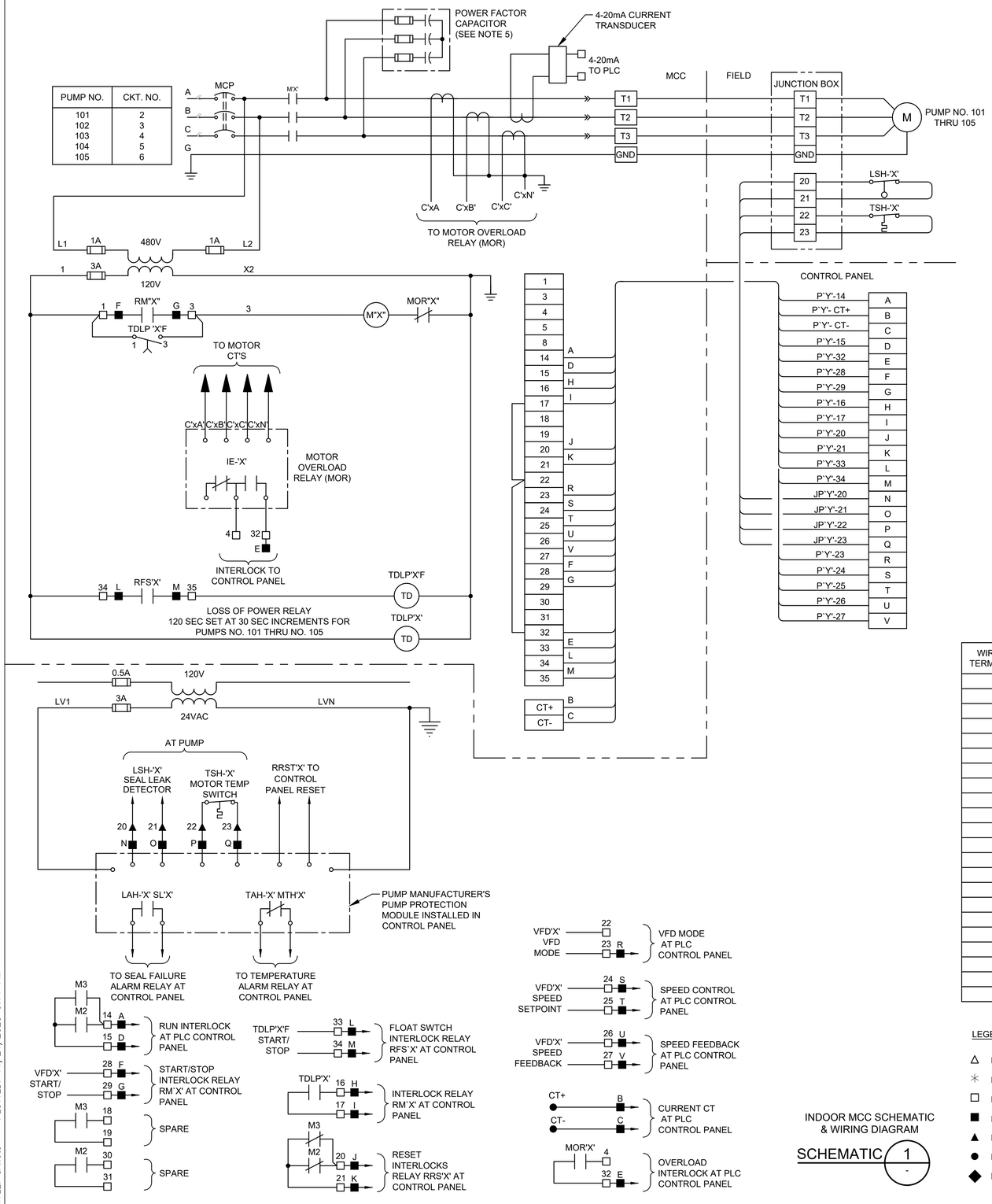

PUMP NO.	CKT. NO.
101	2
102	3
103	4
104	5
105	6

WIRE TAG OR TERMINAL LABEL	PUMP NO. 101	PUMP NO. 102	PUMP NO. 103	PUMP NO. 104	PUMP NO. 105	FUNCTION
A	3P1	3P2	3P3	3P4	3P5	24VDC CONTROL
B	124	224	324	424	524	4-20mA CURRENT TRANSDUCER
C	125	225	325	425	525	4-20mA CURRENT TRANSDUCER
D	116	216	316	416	516	M CONTACT
E	117	217	317	417	517	OVERLOAD ALARM
F	114	214	314	414	514	RUN INTERLOCK
G	115	215	315	415	515	RUN INTERLOCK
H	102	202	302	402	502	LOSS OF POWER TIMER
I	103	203	303	403	503	LOSS OF POWER TIMER
J	118	218	318	418	518	ALARM RESET INTERLOCK
K	119	219	319	419	519	ALARM RESET INTERLOCK
L	126	226	326	426	526	FLOAT SWITCH RUN INTERLOCK
M	127	227	327	427	527	FLOAT SWITCH RUN INTERLOCK
N	120	220	320	420	520	SEAL LEAK DETECTOR
O	121	221	321	421	521	SEAL LEAK DETECTOR
P	122	222	322	422	522	MOTOR TEMPERATURE SWITCH
Q	123	223	323	423	523	MOTOR TEMPERATURE SWITCH
R	109	209	309	409	509	VFD MODE
S	110	210	310	410	510	4-20mA VFD SPEED CONTROL
T	111	211	311	411	511	4-20mA VFD SPEED CONTROL
U	112	212	312	412	512	4-20mA VFD SPEED INDICATION
V	113	213	313	413	513	4-20mA VFD SPEED INDICATION

LEGEND

- △ DEVICE OR FIELD TERMINAL LOCATED AT MOTOR
- ✳ DEVICE OR FIELD TERMINAL LOCATED REMOTE
- □ DEVICE OR FIELD TERMINAL LOCATED AT POWER PANEL
- ■ FIELD TERMINAL LOCATED AT CONTROL PANEL
- ▲ REMOTE TERMINAL
- ● DEVICE TERMINAL NO.
- ◆ PC INTERFACE TERMINAL

INDOOR MCC SCHEMATIC & WIRING DIAGRAM

SCHEMATIC 1 / -

NOTES:

1. THE 'X' NOTATION IN SCHEMATIC DESIGNATIONS REPRESENTS APPLICABLE PUMP NO. 101, 102, 103, 104, 105.
2. THE 'Y" NOTATION INDICATES MCC CIRCUIT NUMBER.
3. UNLESS OTHERWISE INDICATED, ALL DEVICES WITHOUT FURTHER DESIGNATION ARE LOCATED AT THE MOTOR CONTROL CENTER (MCC).
4. MOTOR OVERLOAD RELAY OUTPUT CONTACT SHOWN IS NORMALLY CLOSED WHEN RELAY IS DE-ENERGIZED. OPEN WHEN ENERGIZED, AND CLOSED WHEN IN ALARM. (VERIFY OPERATION OF RELAY PROVIDED AND ADJUST CONNECTION OF RMOR AUXILIARY RELAYS.)
5. CONTRACTOR TO COORDINATE POWER FACTOR CORRECTION CAPACITOR SIZE WITH PUMP MANUFACTURER.

GAI
Gupta & Associates, Inc.
CONSULTING ENGINEERING
Registration No. F-2593
302 Dennis St.,
Houston, Texas 77006
Tel: 713-636-2936
Fax: 713-636-2967
email: hforouzan@gaiconsulting.com

ARCADIS
Infrastructure · Water · Environment · Buildings
1330 Post Oak Blvd, Suite 2250
Houston, TX 77056
Tel: 713-953-4800
Fax: 713-977-4620
www.arcadis.com
Texas Registered Engineering Firm F-533

SURVEYED BY: AMANI ENGR.
FB NO. P-6335

STATE OF TEXAS · H. A. FOROUZAN · 77748 · REGISTERED PROFESSIONAL ENGINEER
11/18/2025

CITY OF HOUSTON
HOUSTON PUBLIC WORKS

LIFT STATION REHABILITATION & RECONSTRUCTION CONSENT DECREE

CHERRY OAK LIFT STATION MCC POWER SCHEMATIC & WIRING DIAGRAM

E-20

WBS NUMBER	FOR CITY OF HOUSTON USE ONLY
R-000267-0175-4	
DRAWING SCALE	
NONE	
CITY OF HOUSTON PM	
NP NAWARAJ PANTA, P.E.	
SHEET NO. 98 OF 312	

NO.	DATE	REVISION	APP.

FILE PATH: O:\H8103_Houston Lift Station Removal And Replacement (CMAR)\6 Drawings\Electrical\Working\Cherry Oak\Cherry Oak_E-08.dwg
PLOT STYLE: GAI.ctb PLOTTED: 11/21/2025 9:11 PM

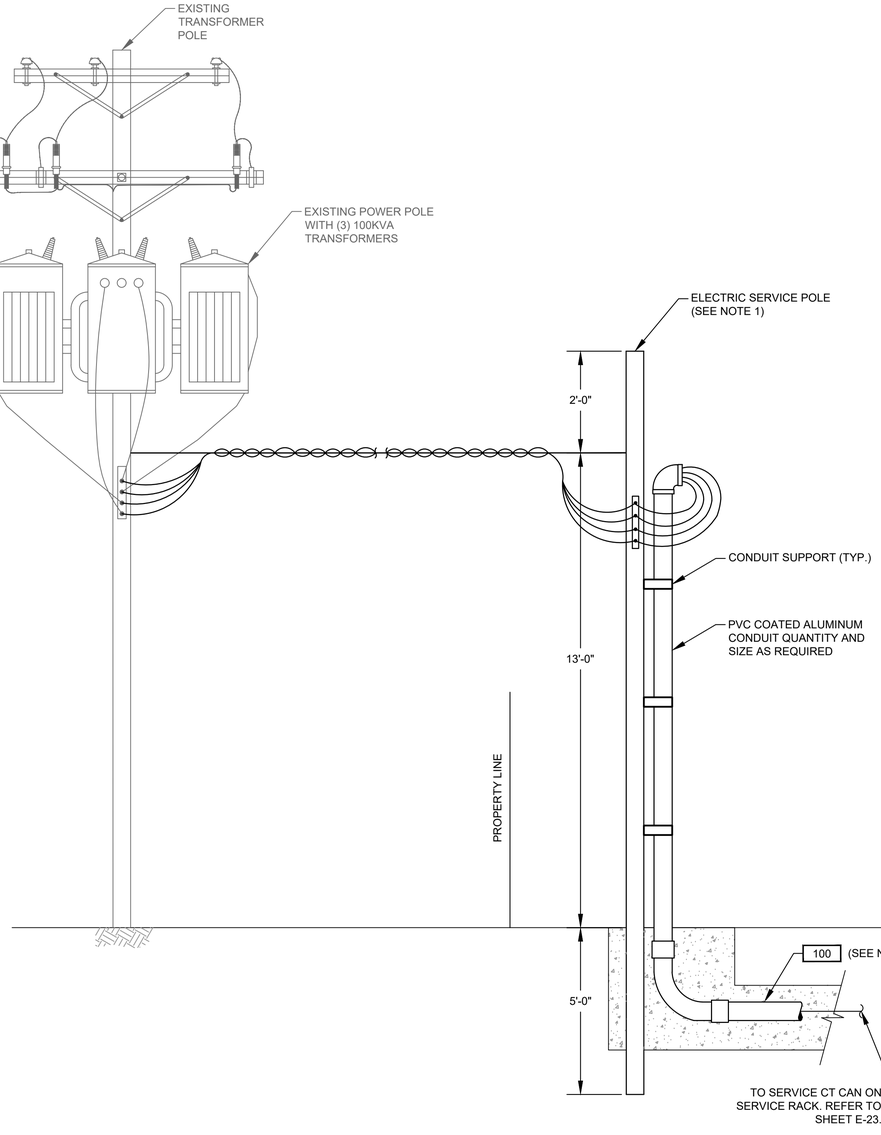

ELECTRICAL SERVICE ENTANCE

DETAIL 1 / NONE -

NOTES:

1. ELECTRICAL SERVICE FEEDER PROVIDED AND INSTALLED BY ELECTRICAL CONTRACTOR. COORDINATE WITH CPE FOR THE REQUIREMENTS OF THE INSTALLATION.
2. THIS GENERATOR WILL BE USED IN EMERGENCY USE ONLY.

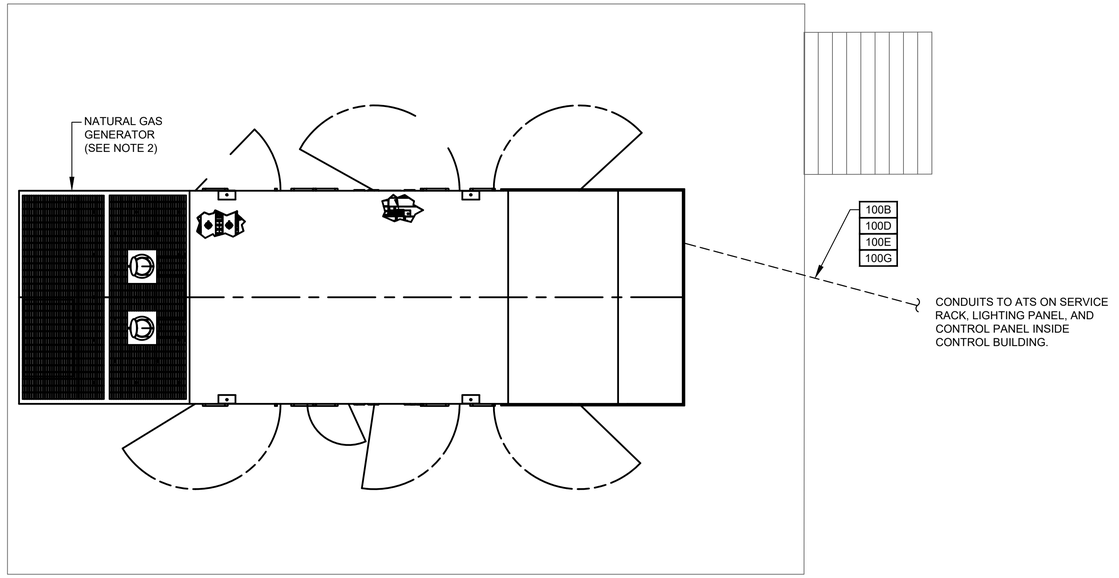

GENERATOR ENCLOSURE ON ELEVATED PLATFORM DETAIL

DETAIL 1 / 3/8" = 1'-0" -

NO.	DATE	REVISION	APP.

GAI
Gupta & Associates, Inc.
CONSULTING ENGINEERING
Registration No. F-2593
302 Dennis St.,
Houston, Texas 77006
Tel: 713-636-2936
Fax: 713-636-2987
email: hforouzan@gaiconsulting.com

ARCADIS
Infrastructure · Water · Environment · Buildings
1330 Post Oak Blvd, Suite 2250
Houston, TX 77056
Tel: 713-953-4800
Fax: 713-977-4620
www.arcadis.com
Texas Registered Engineering Firm F-533

STATE OF TEXAS
H. A. FOROUZAN
77748
REGISTERED PROFESSIONAL ENGINEER
03/17/2026

SURVEYED BY: AMANI ENGR.
FB NO. P-6335

CITY OF HOUSTON
HOUSTON PUBLIC WORKS

LIFT STATION REHABILITATION & RECONSTRUCTION CONSENT DECREE

CHERRY OAK LIFT STATION ELECTRICAL SERVICE POLE & GENERATOR DETAILS

E-21

WBS NUMBER	FOR CITY OF HOUSTON USE ONLY
R-000267-0175-3	
DRAWING SCALE	
AS SHOWN	
CITY OF HOUSTON PM	
NP NAWARAJ PANTA, P.E.	
SHEET NO. 99 OF 312	

FILE PATH: O:\H8103_Houston Lift Station Removal And Replacement (CMAR)\6 Drawings\Electrical\Working\Cherry Oak\2026-03-17\Cherry Oak_E-09.dwg
PLOT STYLE: COH.ctb PLOTTED: 3/17/2026 3:24 PM

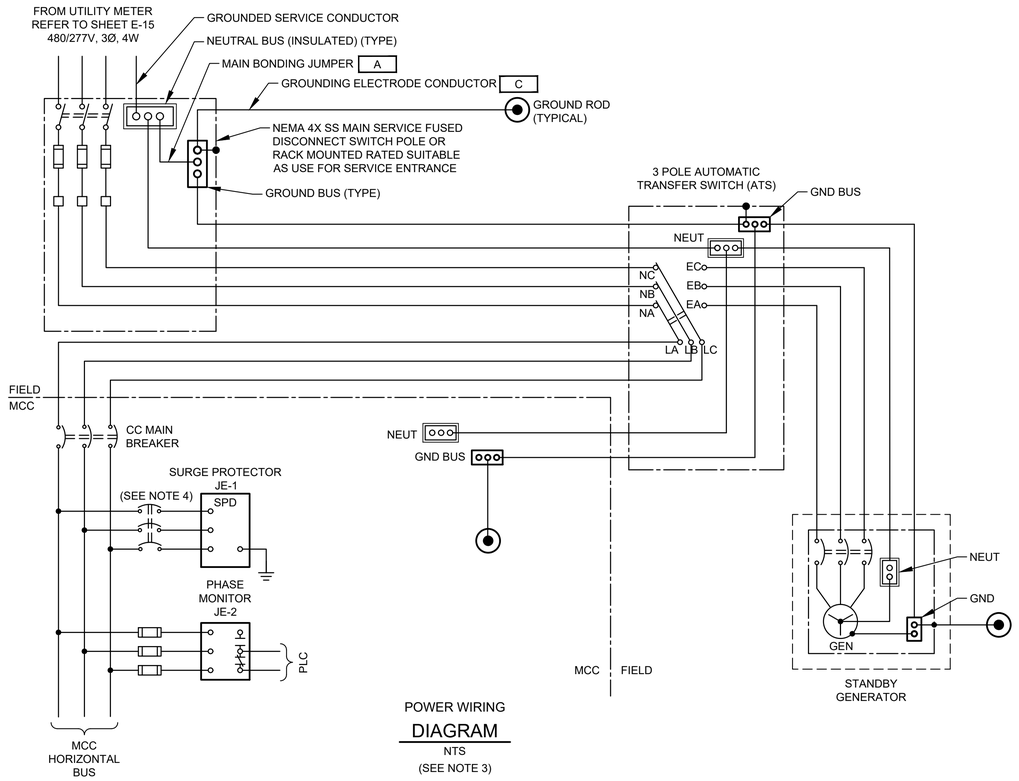

POWER WIRING
DIAGRAM
NTS
(SEE NOTE 3)

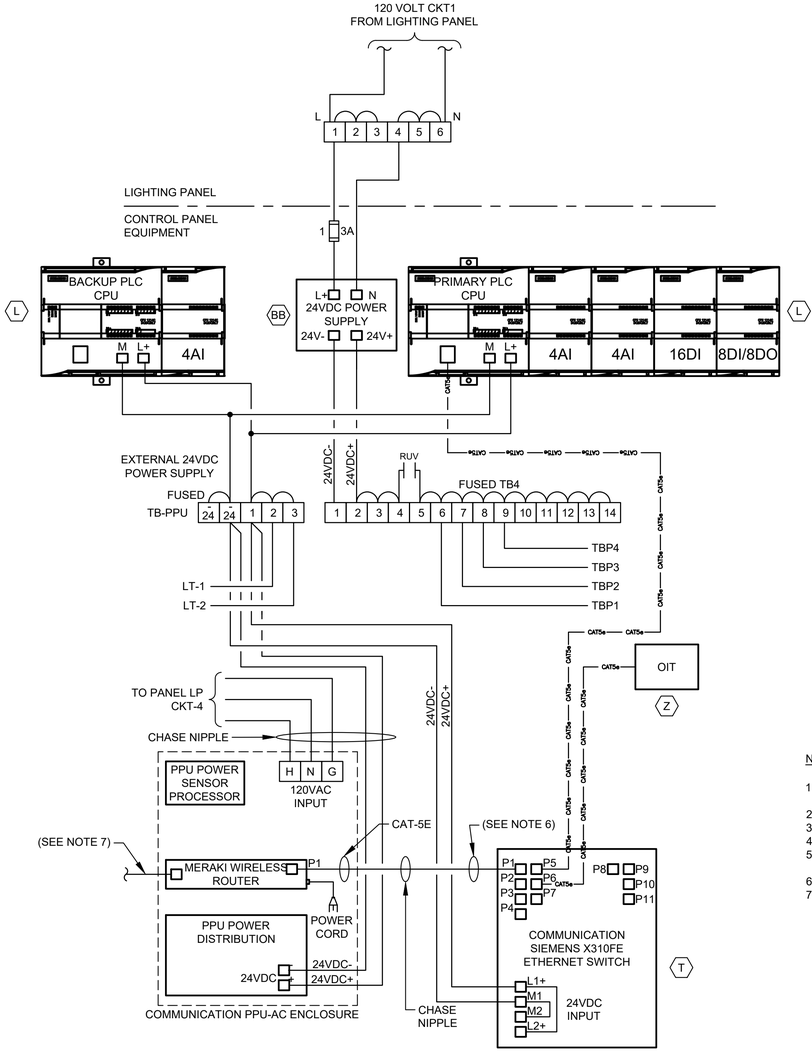

CONTROL POWER &
COMMUNICATIONS WIRING
DIAGRAM
NTS
(SEE NOTE 5)

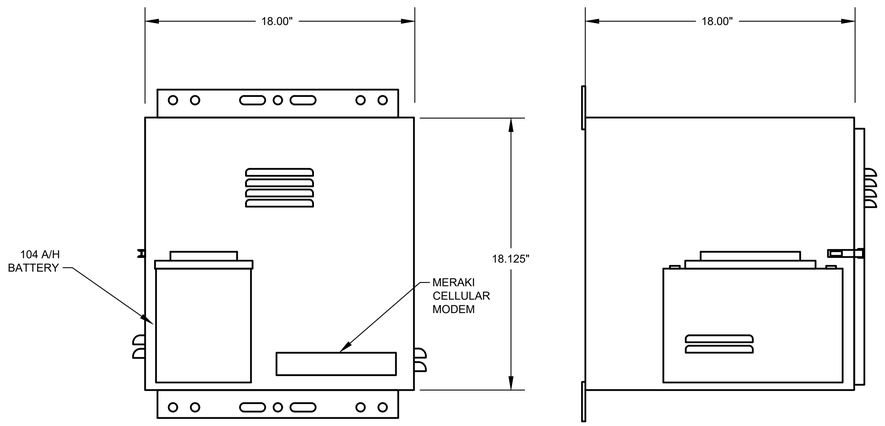

PPU-AC
CONTROL ENCLOSURE
ELEVATION
NTS

NOTES:

1. UNLESS OTHERWISE INDICATED, ALL DEVICES WITHOUT FURTHER DESIGNATION ARE LOCATED AT THE MOTOR CONTROL CENTER (MCC).
2. REFER TO SPEC SECTION 16120 FOR CONDUCTOR COLOR CODE.
3. REFER TO E-15.
4. PROVIDE BREAKER SIZE ACCORDING TO MANUFACTURER'S REQUIREMENTS.
5. COMMUNICATION PPU-AC & SCADA SHALL BE PROVIDED BY CONTRACTOR INCLUDING TO RUN CONDUITS & WIRES.
6. ETHERNET CABLE FOR MERAKI CELLULAR ROUTER (P1).
7. POE CABLE TO RADIO.

NO.	DATE	REVISION	APP.

GAI
Gupta & Associates, Inc.
CONSULTING ENGINEERING
Registration No. F-2593
302 Dennis St.,
Houston, Texas 77006
Tel: 713-636-2936
Fax: 713-636-2987
email: hforouzan@gaiconsulting.com

ARCADIS
Infrastructure · Water · Environment · Buildings
1330 Post Oak Blvd, Suite 2250
Houston, TX 77056
Tel: 713-953-4800
Fax: 713-977-4620
www.arcadis.com
Texas Registered Engineering Firm F-533

SURVEYED BY: AMANI ENGR.
FB NO. P-6335

STATE OF TEXAS
H. A. FOROUZAN
77748
REGISTERED PROFESSIONAL ENGINEER
11/18/2025

CITY OF HOUSTON
HOUSTON PUBLIC WORKS

LIFT STATION REHABILITATION & RECONSTRUCTION
CONSENT DECREE

CHERRY OAK LIFT STATION
MCC INCOMING POWER SCHEMATIC & COMM. DIA.

E-22

WBS NUMBER	FOR CITY OF HOUSTON USE ONLY
R-000267-0175-4	
DRAWING SCALE	
AS SHOWN	
CITY OF HOUSTON PM	
NP NAWARAJ PANTA, P.E.	
SHEET NO. 100 OF 312	

FILE PATH: O:\H8103_Houston Lift Station Removal And Replacement (CMAR)\6 Drawings\Electrical\Working\Cherry Oak\Cherry Oak_E-10.dwg
PLOT STYLE: GAI.ctb PLOTTED: 11/21/2025 9:12 PM

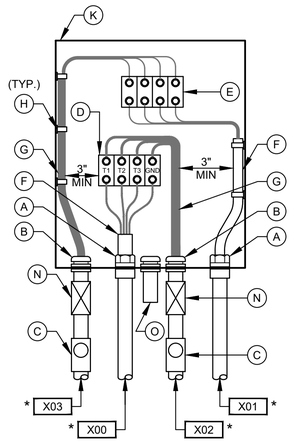

JUNCTION BOX

DETAIL 7 - NTS (SEE NOTE 7)

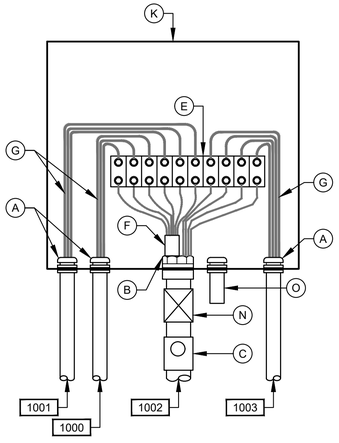

LEVEL TRANSMITTER JUNCTION BOX

DETAIL 8 - NTS (SEE NOTE 7)

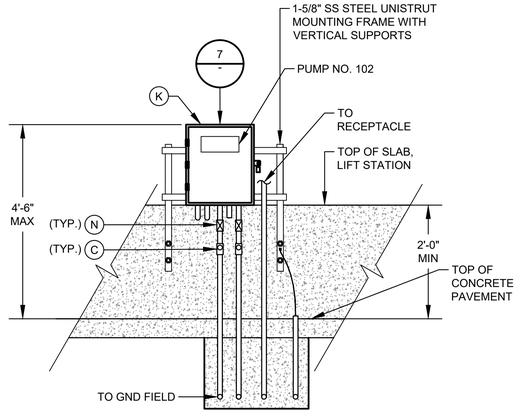

DETAIL 1 - NTS (SEE NOTE 9 & 12)

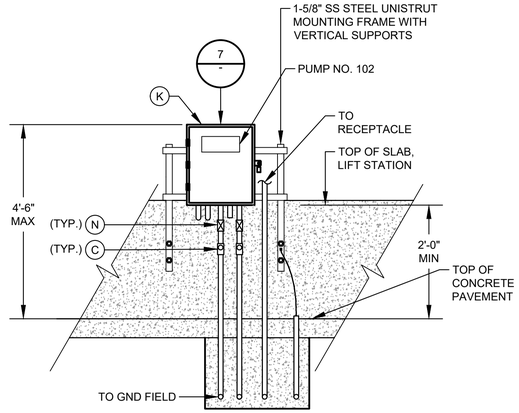

DETAIL 2 - NTS (SEE NOTE 9 & 12)

* REPLACE `X' PER NOTATION SCHEDULE

NOTATION SCHEDULE

`X'	PUMP NO.
2	101
3	102
4	103
5	104
7	105

NOTES:

1. NAMEPLATES SHALL BE MOUNTED TO JUNCTION BOXES USING 316 STAINLESS STEEL HARDWARE.
2. MAINTAIN MINIMUM SEPARATION REQUIRED UNDER NEC ARTICLE 504, BETWEEN INTRINSICALLY SAFE CONTROL WIRING AND NON INTRINSICALLY SAFE MOTOR FEEDER WIRING.
3. UNLESS OTHERWISE NOTED, ALL EXTERIOR EXPOSED CONDUITS SHALL BE PVC COATED ALUMINUM.
4. UNLESS OTHERWISE NOTED, ALL NUTS, BOLTS, SCREWS WASHERS, ETC SHALL BE TYPE 316 STAINLESS STEEL.
5. ALL UNDERGROUND CONDUITS TO BE ENCASED IN REINFORCED CONCRETE DUCTBANK.
6. PROVIDE ANTI-CORROSIVE SPRAY ON ANY BARE METAL PARTS OR EXPOSED WIRE.
7. SEE WIRING SCHEMATICS FOR TERMINALS AND WIRE NUMBERS.
8. ANY CONDUIT REQUIRING A CSBE SEAL, SHALL BE A MINIMUM SIZE OF 2 1/2" PER CABLE.
9. DETAIL SHOWN MAY BE MODIFIED PER SITE SITUATION.
10. COORDINATE WITH WASTE WATER OPERATIONS ELECTRICAL ORGANIZATION FOR THE OPENING OF JUNCTION BOXES TO THE SIDE OF WET WELL IF REQUIRED DURING CONSTRUCTION.
11. THE ENCLOSURES WITH ELECTRICAL CIRCUITS SHALL BE A MINIMUM OF 5 FEET FROM ANY CLASSIFIED AREA, OTHERWISE EXPLOSION PROOF TYPE ENCLOSURES SHALL BE USED.
12. THE RECEPTACLES SHALL BE EXPLOSION PROOF TYPE IF INSTALLED WITHIN 5 FEET OF CLASSIFIED AREA, SHALL BE FIELD VERIFIED.

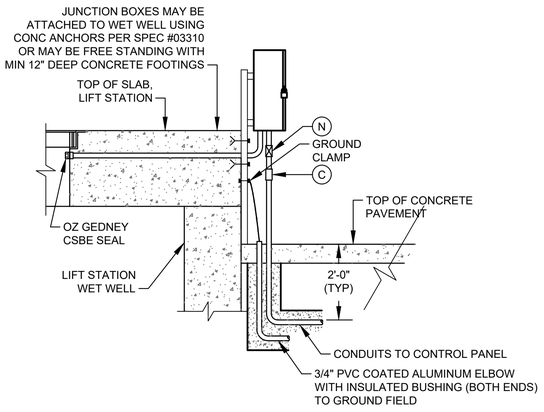

TYP SIDE VIEW FOR DETAIL 1 THRU 6

(SEE NOTE 10)

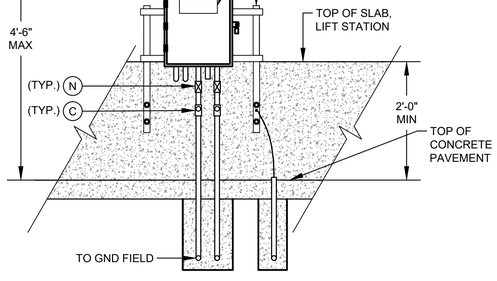

DETAIL 3 - NTS (SEE NOTE 9 & 12)

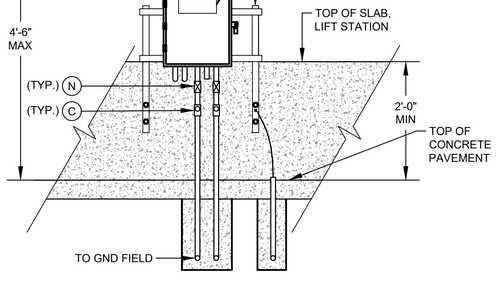

DETAIL 4 - NTS (SEE NOTE 9 & 12)

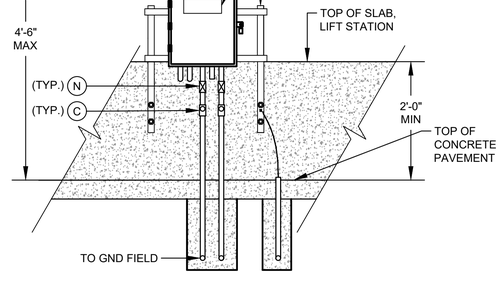

DETAIL 5 - NTS (SEE NOTE 9 & 12)

JUNCTION BOX EQUIPMENT SCHEDULE

- A - OZ GEDNEY CSBE SEAL
- B - WATERTIGHT CONDUIT HUB WITH INSULATED BUSHING
- C - CLASS I, DIV 1, EXPLOSION PROOF SEAL INSTALLED PER NEC DIV 501
- D - POWER TERMINAL BLOCK W/SCREW DOWN BOX LUGS
- E - CONTROL TERM BLOCK W/SCREW DOWN BOX LUGS
- F - MULTI-CONDUCTOR CABLE, REMOVE OUTER JACKET AS SHOWN
- G - WIRING AS SCHEDULED
- H - WIRING HARNESS PERMANENTLY AFFIXED
- I - PUMP CONTROL WIRING FROM PUMPS 2; 2 & 3; 4; OR D2, AS APPLICABLE
- J - NOT USED.
- K - NEMA 6P STAINLESS STEEL JUNCTION BOX WITH GASKETED FRONT COVER, SINGLE QUARTER TURN, OIL-TIGHT LATCH AND PADLOCKING PROVISIONS, HOFFMAN D-3L16H1206 SS LF OR EQUAL. MINIMUM SIZE: 12"W X 16"H X 6"D
- L - NAMEPLATE, SEE SPECIFICATIONES (SEE NAMEPLATE SCHEDULE)
- M - NOT USED.
- N - EXPANSION FITTING
- O - DRAIN VENT

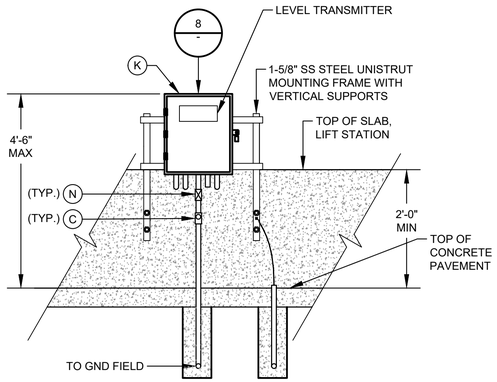

DETAIL 6 - NTS (SEE NOTE 9 & 12)

GAI
Gupta & Associates, Inc.
CONSULTING ENGINEERING
Registration No. F-2593
302 Dennis St., Houston, Texas 77006
Tel: 713-636-2936
Fax: 713-636-2987
email: hforouzan@gaiconsulting.com

ARCADIS
Infrastructure · Water · Environment · Buildings
1330 Post Oak Blvd, Suite 2250
Houston, TX 77056
Tel: 713-953-4800
Fax: 713-977-4620
www.arcadis.com
Texas Registered Engineering Firm F-533

SURVEYED BY: AMANI ENGR.
FB NO. P-6335

STATE OF TEXAS · H. A. FOROUZAN · 77748 · REGISTERED PROFESSIONAL ENGINEER

11/18/2025

CITY OF HOUSTON

HOUSTON PUBLIC WORKS

LIFT STATION REHABILITATION & RECONSTRUCTION CONSENT DECREE

CHERRY OAK LIFT STATION TYPICAL JUNCTION BOX DETAILS

E-23

WBS NUMBER	FOR CITY OF HOUSTON USE ONLY
R-000267-0175-4	
DRAWING SCALE	
AS SHOWN	
CITY OF HOUSTON PM	
NP NAWARAJ PANTA, P.E.	
SHEET NO. 101 OF 312	

NO.	DATE	REVISION	APP.

FILE PATH: O:\H8103_Houston Lift Station Removal And Replacement (CMAR)\6 Drawings\Electrical\Working\Cherry Oak\Cherry Oak_E-11.dwg
PLOT STYLE: GAI.ctb PLOTTED: 11/21/2025 9:12 PM

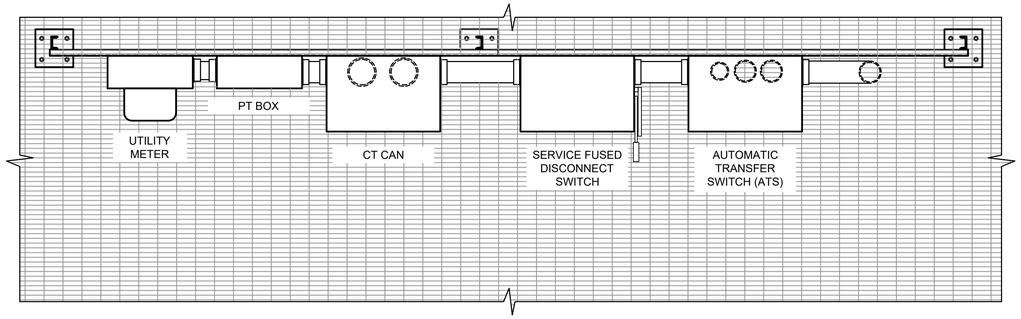

PLAN

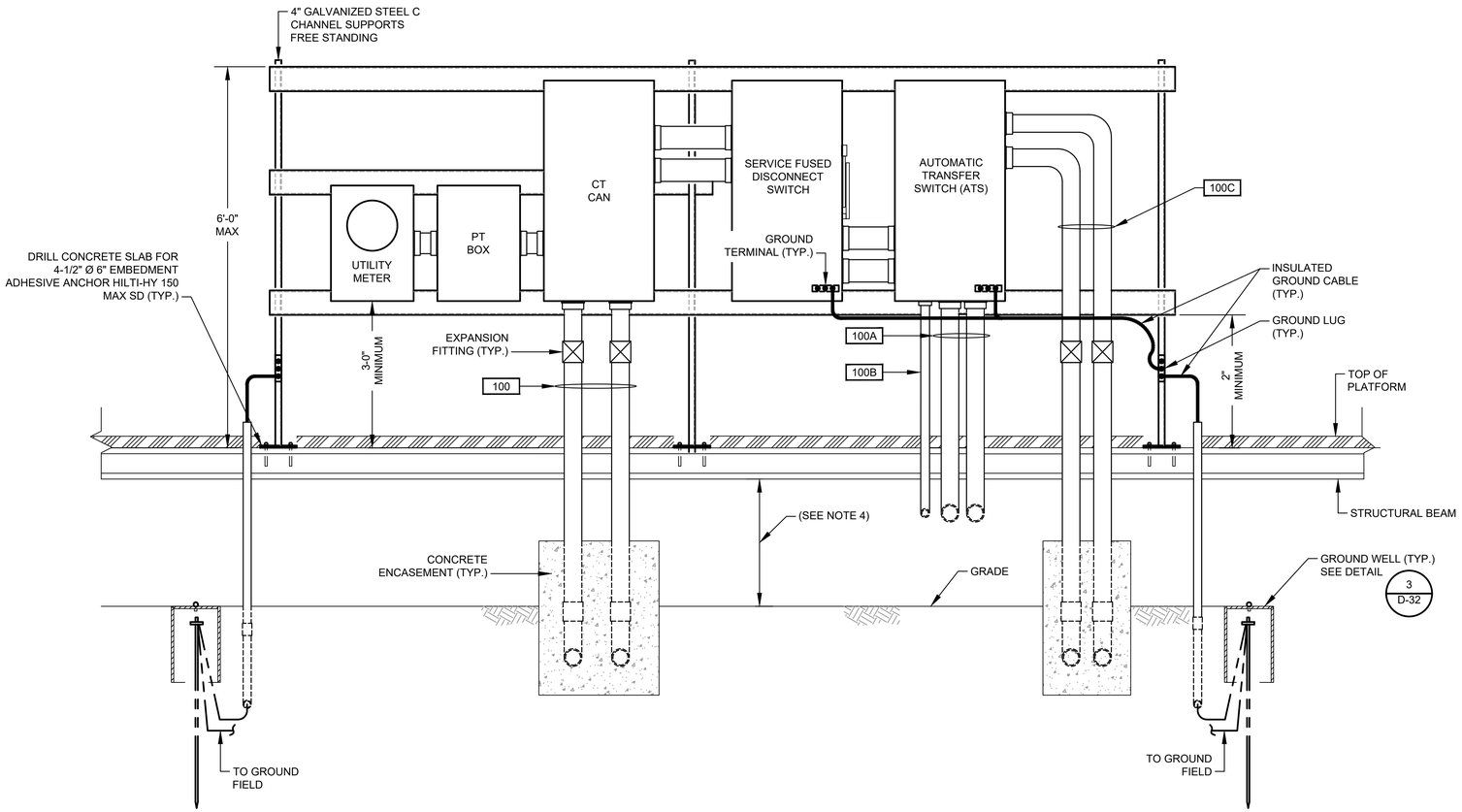

SERVICE MOUNTING RACK

DETAIL 1 / -

NTS.

NOTES:

1. CHASE NIPPLE(S) WITH REMOVABLE CAP(S) FOR CONNECTION OF PORTABLE GENERATOR. NOTE: CAP(S) TO BE ATTACHED TO PANEL OR CONDUIT(S) BY STAINLESS STEEL CHAIN.
2. T.O.C DEFINED AS TOP OF PAVEMENT OR TOP OF PANEL ENCLOSURE PEDESTAL WHICHEVER IS HIGHER.
3. PROVIDE CENTER BOLLARD WHEN SPACE BETWEEN OUTSIDE BOLLARDS IS GREATER THEN 4'-0".
4. SEE STRUCTURAL DRAWINGS FOR ELEVATION.

NO.	DATE	REVISION	APP.

GAI
Gupta & Associates, Inc.
CONSULTING ENGINEERING
Registration No. F-2593
302 Dennis St.,
Houston, Texas 77006
Tel: 713-636-2936
Fax: 713-636-2987
email: hforouzan@gaiconsulting.com

ARCADIS
Infrastructure · Water · Environment · Buildings
1330 Post Oak Blvd, Suite 2250
Houston, TX 77056
Tel: 713-953-4800
Fax: 713-977-4620
www.arcadis.com
Texas Registered Engineering Firm F-533

SURVEYED BY: AMANI ENGR.
FB NO. P-6335

STATE OF TEXAS
H. A. FOROUZAN
77748
REGISTERED PROFESSIONAL ENGINEER
11/18/2025

CITY OF HOUSTON
HOUSTON PUBLIC WORKS

LIFT STATION REHABILITATION & RECONSTRUCTION CONSENT DECREE

CHERRY OAK LIFT STATION ELECTRICAL SERVICE RACK DETAIL

E-24

WBS NUMBER	FOR CITY OF HOUSTON USE ONLY
R-000267-0175-4	
DRAWING SCALE	
AS SHOWN	
CITY OF HOUSTON PM	
NP NAWARAJ PANTA, P.E.	
SHEET NO. 102 OF 312	

FILE PATH: O:\H8103_Houston Lift Station Removal And Replacement (CMAR)\6 Drawings\Electrical\Working\Cherry Oak\Cherry Oak_E-12.dwg
PLOT STYLE: GAI.ctb PLOTTED: 11/21/2025 9:12 PM

HMI

CONTROL PANEL PLC

CONTROL BUILDING

480V

INFLUENT PUMPS MCC

INFLUENT PUMP NO. 101

INFLUENT PUMP NO. 102

INFLUENT PUMP NO. 103

INFLUENT PUMP NO. 104

INFLUENT PUMP NO. 105 (STANDBY)

SEAL FAIL ALARM | MOTOR OVERLOAD ALARM | MOTOR CURRENT | HIGH TEMP ALARM | IN HAND | IN AUTO | ON/OFF | START/ STOP

MA 1 | MO 1 | II 1 | TH 1 | HI 1 | IA 1 | YFS 1 | YCS 1

MA 2 | MO 2 | II 2 | TH 2 | HI 2 | IA 2 | YFS 2 | YCS 2

MA 3 | MO 3 | II 3 | TH 3 | HI 3 | IA 3 | YFS 3 | YCS 3

MA 4 | MO 4 | II 4 | TH 4 | HI 4 | IA 4 | YFS 4 | YCS 4

MA 5 | MO 5 | II 5 | TH 5 | HI 5 | IA 5 | YFS 5 | YCS 5

INFLUENT PUMP NO.101 H/O/A RUN

INFLUENT PUMP NO.102 H/O/A RUN

INFLUENT PUMP NO.103 H/O/A RUN

INFLUENT PUMP NO.104 H/O/A RUN

INFLUENT PUMP NO.105 H/O/A RUN

PRIMARY PLC

BACKUP PLC

INFLUENT PUMP CONTROL PANEL

ALARMS RESET

OIT

TO SHEET I-14

I-14

I-14

WET WELL

LT 1

LE 1

LT 2

LE 2

FS2 HIGH-HIGH LEVEL FLOAT SWITCH

FS1 HIGH LEVEL FLOAT SWITCH

LSH 1A | TSH 1A

LSH 2A | TSH 2A

LSH 3A | TSH 3A

LSH 4A | TSH 4A

LSH 5A | TSH 5A

M

PI 1 | PI 2 | PI 3 | PI 4 | PI 5

12" | 14" SWCHKVLV | 14" PLV | 2" ARV

18" | 18" x 14"

INFLUENT DISCHARGE

REVISION

NO. | DATE | APP.

GAI
Gupta & Associates, Inc.
CONSULTING ENGINEERING
Registration No. F-2593
302 Dennis St.,
Houston, Texas 77006
Tel: 713-636-2936
Fax: 713-636-2987
email: hforouzan@gaiconsulting.com

ARCADIS
Infrastructure · Water · Environment · Buildings
1330 Post Oak Blvd, Suite 2250
Houston, TX 77056
Tel: 713-953-4800
Fax: 713-977-4620
www.arcadis.com
Texas Registered Engineering Firm F-533

SURVEYED BY: AMANI ENGR.

FB NO. P-6335

STATE OF TEXAS
H. A. FOROUZAN
77748
REGISTERED PROFESSIONAL ENGINEER

11/18/2025

CITY OF HOUSTON

HOUSTON PUBLIC WORKS

LIFT STATION REHABILITATION & RECONSTRUCTION CONSENT DECREE

CHERRY OAK LIFT STATION PROCESS & INSTRUMENTATION DIAGRAM-I

I-13

WBS NUMBER	FOR CITY OF HOUSTON USE ONLY
R-000267-0175-4	
DRAWING SCALE	
NONE	
CITY OF HOUSTON PM	
NP NAWARAJ PANTA, P.E.	
SHEET NO. 103 OF 312	

FILE PATH: C:\Users\dkwong\Documents\Cherry Oak\Cherry Oak_I-01.dwg
PLOT STYLE: COH.ctb PLOTTED: 11/21/2025 10:57 PM

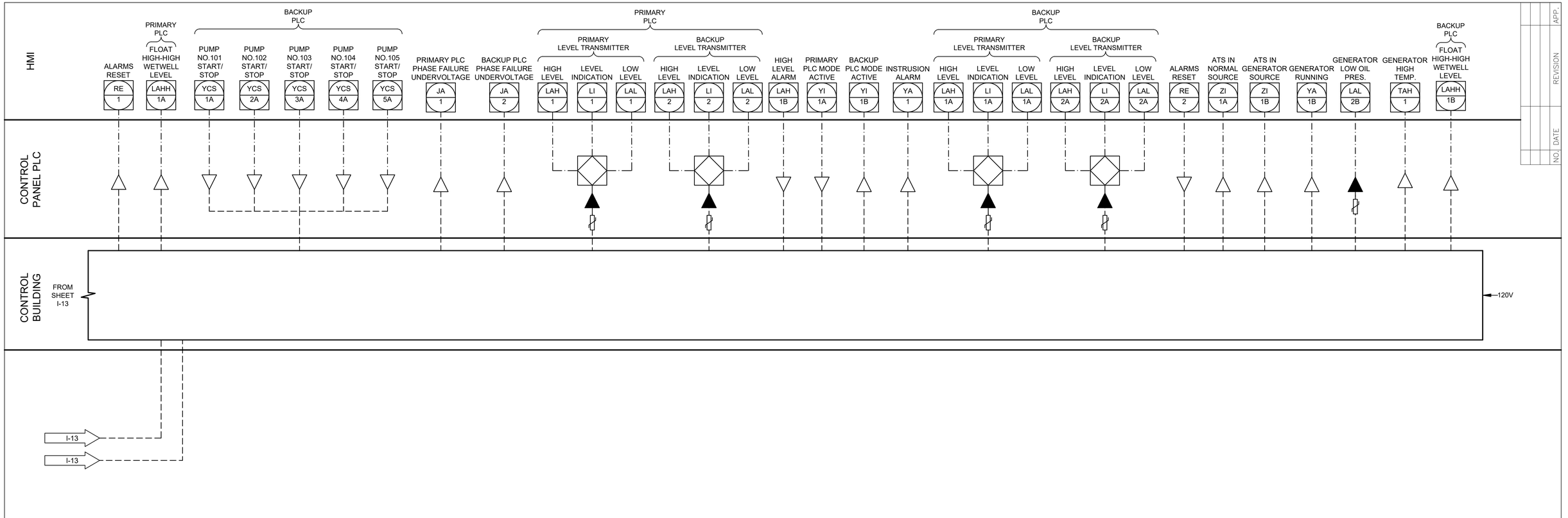

GAI
Gupta & Associates, Inc.
CONSULTING ENGINEERING
Registration No. F-2593
302 Dennis St.,
Houston, Texas 77006
Tel: 713-636-2936
Fax: 713-636-2987
email: hforouzan@gaiconsulting.com

ARCADIS
Infrastructure · Water · Environment · Buildings
1330 Post Oak Blvd, Suite 2250
Houston, TX 77056
Tel: 713-953-4800
Fax: 713-977-4620
www.arcadis.com
Texas Registered Engineering Firm F-533

SURVEYED BY: AMANI ENGR.
FB NO. P-6335

STATE OF TEXAS
H. A. FOROUZAN
77748
REGISTERED PROFESSIONAL ENGINEER
11/18/2025

CITY OF HOUSTON
HOUSTON PUBLIC WORKS

LIFT STATION REHABILITATION & RECONSTRUCTION
CONSENT DECREE

CHERRY OAK LIFT STATION PROCESS & INSTRUMENTATION DIAGRAM-II

I-14

WBS NUMBER	FOR CITY OF HOUSTON USE ONLY
R-000267-0175-4	
DRAWING SCALE	
NONE	
CITY OF HOUSTON PM	
NP NAWARAJ PANTA, P.E.	
SHEET NO. 104 OF 312	

FILE PATH: C:\Users\dkwong\Documents\Cherry Oak\Cherry Oak_I-02.dwg
PLOT STYLE: GAI.ctb PLOTTED: 11/21/2025 10:57 PM

EQUIPMENT AND DEVICE SCHEDULE

ITEM	QUANTITY	DESCRIPTION
A	1	SINGLE CHANNEL INTRINSICALLY SAFE RELAY
B	2	ANALOG SIGNAL ISOLATOR
C	5	PUMP PROTECTION MODULE
D	*	NOT USED
E	5	HAND-OFF-AUTO SWITCH, 3 POSITION, HEAVY-DUTY OIL TIGHT WITH 2 SETS OF CONTACT BLOCKS (PUMP CONTROL)
F	5	INDICATING LIGHT, HEAVY DUTY, OILTIGHT, RED, 24 VDC, LED, WITH "RUN" LEGEND
G	*	NOT USED.
H	1	SWITCH FOR CABINET LIGHT, 120V, 20A, SPST
I	2	DUPLEX RECEPTACLE, 120V, 20A, 2 WIRE, GROUNDED, GFCI TYPE
J	1	24" LED STRIP LIGHT 120V SUITABLE FOR ZERO DEGREE OPERATION.
K	*	NAMEPLATES, SEE SPECIFICATIONS (SEE NAMEPLATE SCHEDULE)
L	2	PROGRAMMABLE LOGIC CONTROLLER WITH EXPANSION UNIT
M	*	CONTROL RELAY 24VDC RELAY WITH THREE FORM C CONTACTS AND 11 PIN SOCKET BASE
N	-	NOT USED
O	-	NOT USED
P	1	NEMA 12 GASKETED STEEL ENCLOSURES WITHOUT VENTS 72" H X 20" D X 72" W
Q	*	TERMINAL BLOCK
R	1	WIRE DUCT 2" WIDE X 2" DEEP MINIMUM
S	1	GROUND BUS
T	1	COMMUNICATION ETHERNET SWITCH
U	9	CARTRIDGE
V	1	PUSHBUTTON, BLACK WITH RESET LEGEND
W	-	NOT USED
X	*	FUSED TERMINAL BLOCKS
Y	1	POWER SURGE PROTECTOR - CONTROL POWER
Z	1	PROGRAMMING SCREEN (OIT)
AA	*	120VAC SYSTEM FUSES
BB	1	120VAC - 24VDC POWER SUPPLY, 5A
CC	*	NOT USED
DD	2	INDICATING LIGHT, HEAVY DUTY, OILTIGHT, GREEN, 24VDC, LED WITH "BACKUP PLC" & "PRIMARY PLC" LEGEND
EE	2	ANALOG I/O SURGE SUPPRESSOR
FF	-	NOT USED

* - AS SCHEDULED

NAMEPLATE SCHEDULE

DESIGNATION	ENGRAVED
N1	PUMP STATION DESIGNATION
N2	PUMP NO. 1
N3	PUMP NO. 2
N4	PUMP NO. 3
N5	PUMP NO. 4
N6	PUMP NO. 5
N7	NOT USED.
N8	NOT USED.
N9	NOT USED.
N10	PROGRAMMING SCREEN
N11	NOT USED.
N12	PRIMARY PLC
N13	BACKUP PLC
N14	MOTOR DATA

HORSEPOWER (OUTPUT) ----------
RPM AT FULL LOAD ----------
TIME RATING ----------
FREQUENCY ----------
NUMBER OF PHASES ----------
MODEL NUMBER ----------
RATED VOLTAGE ----------
SERVICE FACTOR ----------
FULL LOAD AMPS ----------
INSULATION CLAS ----------
NEMA DESIGN LETTER ----------
TEMPERATURE RISE ----------
NEMA FRAME SIZE ----------
DATE OF MANUFACTURE ----------
THERMO PROTECTION (IF REQUIRED) --
MOISTURE PROTECTION (IF REQUIRED)-

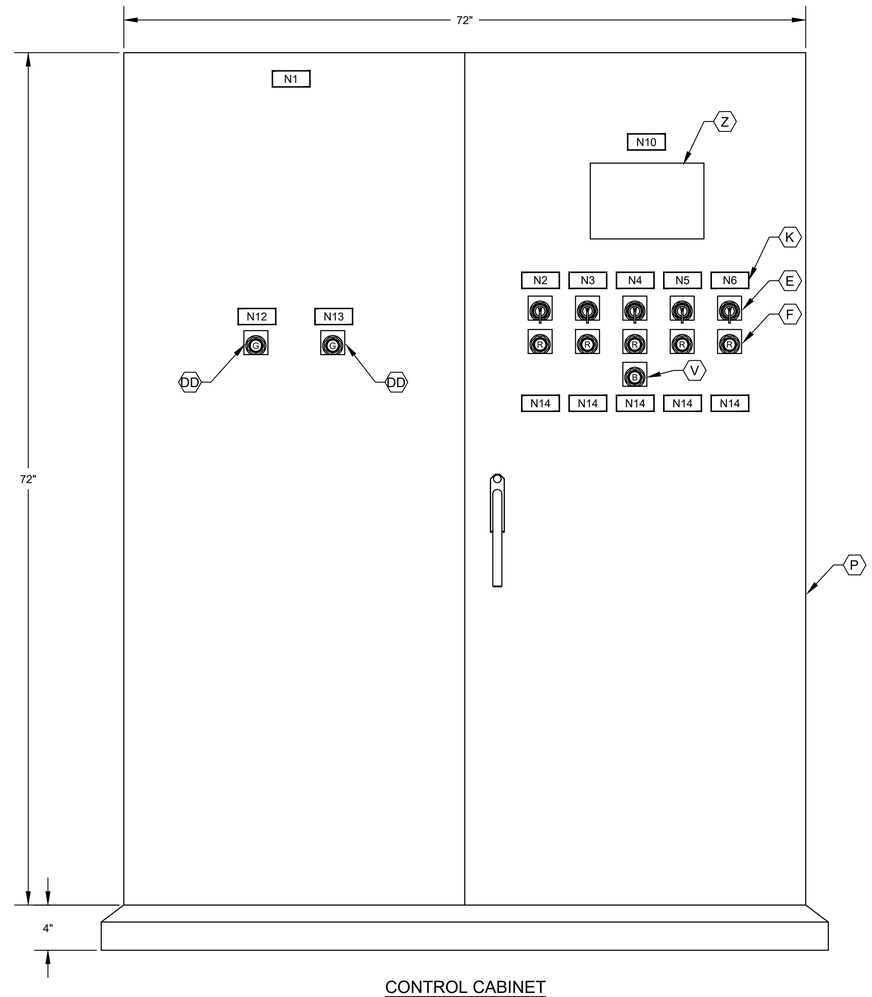

CONTROL CABINET
FRONT DOOR ELEVATION

GENERAL NOTES:

1. NAMEPLATES SHALL BE MOUNTED TO PANELS USING STAINLESS STEEL HARDWARE.
2. REFER SPECIFICATIONS FOR ALL PANEL COMPONENTS.

NO.	DATE	REVISION	APP.

GAI
Gupta & Associates, Inc.
CONSULTING ENGINEERING
Registration No. F-2593
302 Dennis St.,
Houston, Texas 77006
Tel: 713-636-2936
Fax: 713-636-2987
email: hforouzan@gaiconsulting.com

ARCADIS
Infrastructure · Water · Environment · Buildings
1330 Post Oak Blvd, Suite 2250
Houston, TX 77056
Tel: 713-953-4800
Fax: 713-977-4620
www.arcadis.com
Texas Registered Engineering Firm F-533

SURVEYED BY: AMANI ENGR.
FB NO. P-6335

STATE OF TEXAS
H. A. FOROUZAN
77748
REGISTERED PROFESSIONAL ENGINEER
11/18/2025

CITY OF HOUSTON

HOUSTON PUBLIC WORKS

LIFT STATION REHABILITATION & RECONSTRUCTION
CONSENT DECREE

CHERRY OAK LIFT STATION CONTROL CABINET EQUIPMENT LAYOUT & SCHEDULE

I-15

WBS NUMBER	FOR CITY OF HOUSTON USE ONLY
R-000267-0175-4	
DRAWING SCALE	
AS SHOWN	
CITY OF HOUSTON PM	
NP NAWARAJ PANTA, P.E.	
SHEET NO. 105 OF 312	

FILE PATH: C:\Users\dkwong\Documents\Cherry Oak\Cherry Oak_I-03.dwg
PLOT STYLE: GAI.ctb PLOTTED: 11/21/2025 10:57 PM

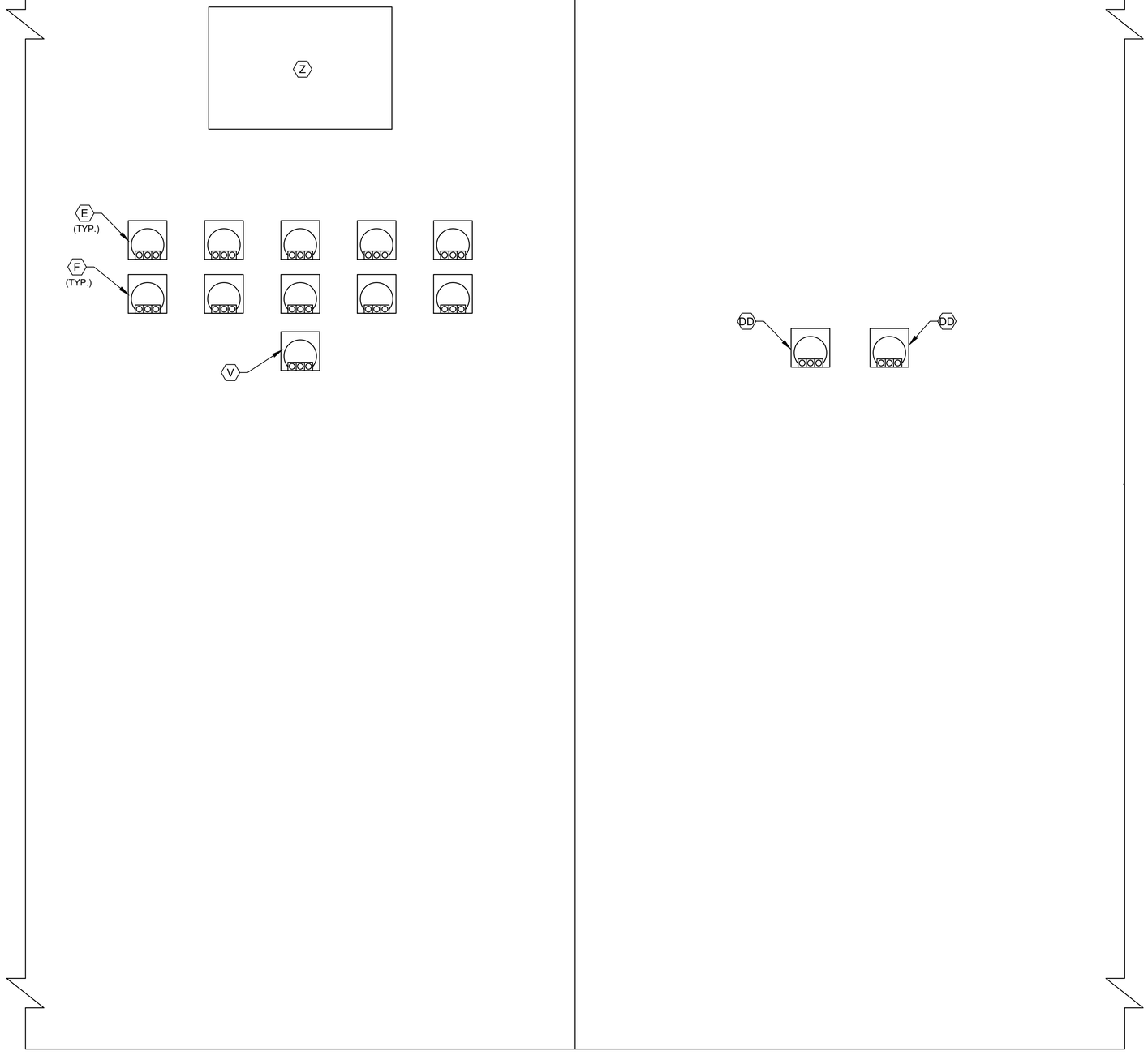

CONTROL CABINET
BACK DOOR ELEVATION

NOTES:

1. SEE SHEET I-15 FOR EQUIPMENT SCHEDULE.

NO.	DATE	REVISION	APP.

GAI
Gupta & Associates, Inc.
CONSULTING ENGINEERING
Registration No. F-2593
302 Dennis St.,
Houston, Texas 77006
Tel: 713-636-2936
Fax: 713-636-2987
email: hforouzan@gaiconsulting.com

ARCADIS
Infrastructure · Water · Environment · Buildings
1330 Post Oak Blvd, Suite 2250
Houston, TX 77056
Tel: 713-953-4800
Fax: 713-977-4620
www.arcadis.com
Texas Registered Engineering Firm F-533

SURVEYED BY: AMANI ENGR.
FB NO. P-6335

STATE OF TEXAS
H. A. FOROUZAN
77748
REGISTERED
PROFESSIONAL ENGINEER
11/18/2025

CITY OF HOUSTON
HOUSTON PUBLIC WORKS

LIFT STATION REHABILITATION & RECONSTRUCTION
CONSENT DECREE

CHERRY OAK LIFT STATION CONTROL CABINET BACK DOOR ELEVATION

I-16

WBS NUMBER	FOR CITY OF HOUSTON USE ONLY
R-000267-0175-4	
DRAWING SCALE	
AS SHOWN	
CITY OF HOUSTON PM	
NP NAWARAJ PANTA, P.E.	
SHEET NO. 106 OF 312	

FILE PATH: C:\Users\dkwong\Documents\Cherry Oak\Cherry Oak_I-04.dwg
PLOT STYLE: GAI.ctb PLOTTED: 11/21/2025 10:57 PM

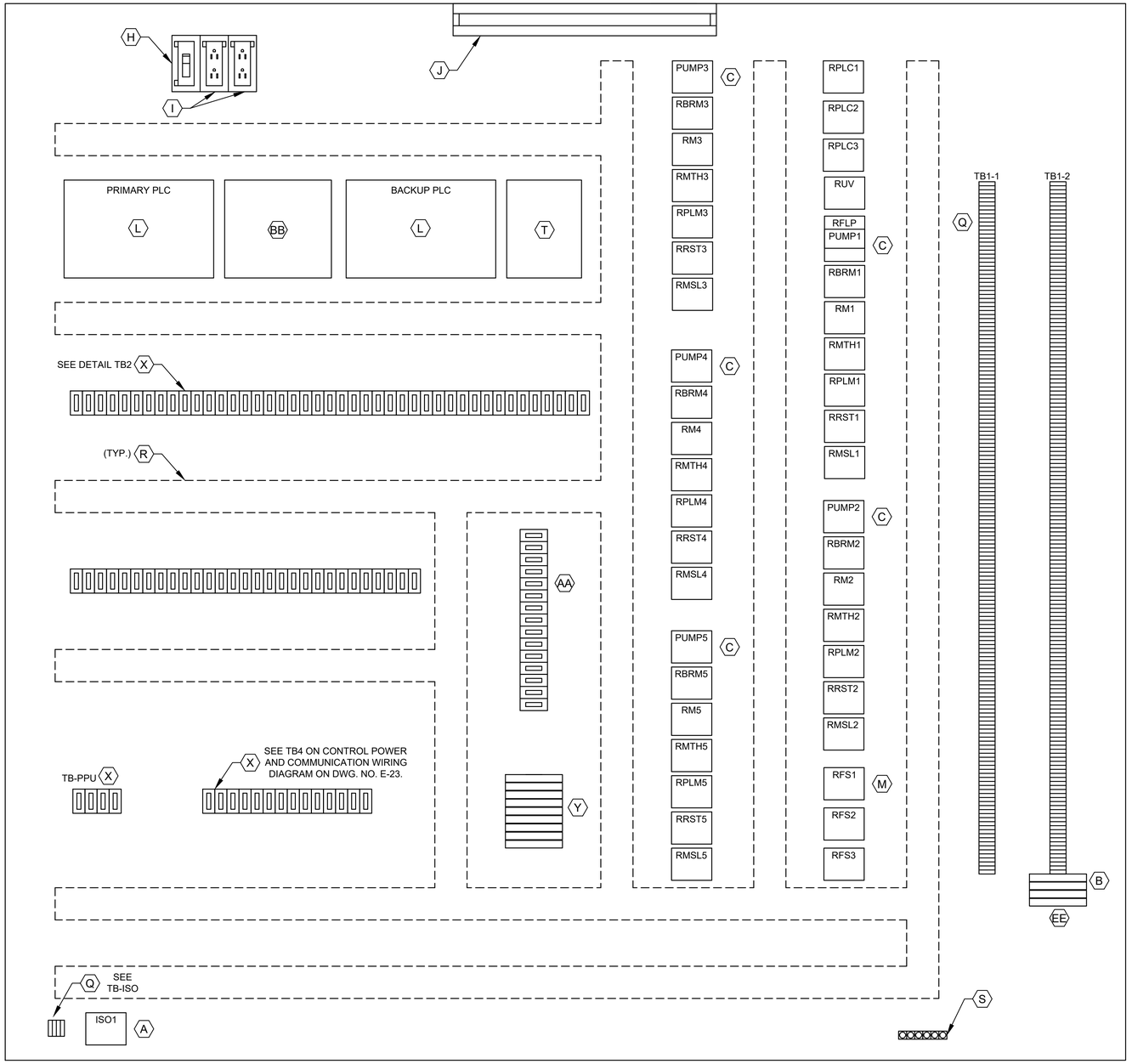

CONTROL PANEL ELEVATION

LEGEND	
TAG	DESCRIPTION
RMTH	MOTOR HIGH TEMPERATURE ALARM RELAY
RPLMP	PLC PUMP RUN RELAY
RRST	PUMP RESET AUX RELAY
RPLC	PLC MODE AUX RELAY
RM	PUMP RUN AUX RELAY
RUV	UNDER VOLTAGE RELAY
RBRM	BACKUP SYSTEM RUN RELAY
ISO	INTRINSICALLY SAFE RELAY
RFS	PUMP RUN FLOAT SWITCH RELAY
RMSL	MOTOR SEAL LEAK ALARM RELAY
RFLP	FLOAT LOCKOUT PUMP RELAY

L1A
L1N
SPARE
3
3N
SPARE
49
50
51
52
53
54
1004
1
24V-
24V-
SPARE
1002
2
11
1001
1001A
12
1003
1003A
34
3N
19
20
102
103
3P1
109
110
112
116
117
120
121
122
123
124
125
126
127
SPARE
SPARE
202
203
3P2
209
210
212
216
217
220
221
222
223
224
225
226
227

DETAIL TB1-1

SPARE
SPARE
302
303
3P3
309
310
312
316
317
320
321
322
323
324
325
326
327
SPARE
SPARE
402
403
3P4
409
410
412
416
417
420
421
422
423
424
425
426
427
SPARE
SPARE
502
503
3P5
509
510
512
516
517
520
521
522
523
524
525
526
527

DETAIL TB1-2

36A
37A
50
52
54
52A
52A
54A
L+
M
35B
38B
41B
44B
SPARE
SPARE
47B
50B
53B
13B
13AB
B
L+
M
14B
14AB
14GB
119
SPARE
L+
M
13
13A
13G
14
14A
14G
1M
2M
1L
SPARE
SPARE

DETAIL TB2

3
30
32
34
37
38
41
33B
45
18B
SPARE
L+
M
13
13A
13G
14
14A
14G
1M
119
120
121
SPARE

DETAIL TB2

200
212
213
214
215
217
218
219
220
221
SPARE
300
312
313
314
315
317
318
319
320
321
SPARE
400
412
413
414
415
417
418
419
420
421
SPARE
500
512
513
514
515
517
518
519
520
521
SPARE

DETAIL TB2

1500
1501
1503
1504

DETAIL TB-ISO

NOTES:

1. SEE SHEET I-15 FOR EQUIPMENT SCHEDULE.

GAI
Gupta & Associates, Inc.
CONSULTING ENGINEERING
Registration No. F-2593
302 Dennis St.,
Houston, Texas 77006
Tel: 713-636-2936
Fax: 713-636-2987
email: hforouzan@gaiconsulting.com

ARCADIS
Infrastructure · Water · Environment · Buildings
1330 Post Oak Blvd, Suite 2250
Houston, TX 77056
Tel: 713-953-4800
Fax: 713-977-4620
www.arcadis.com
Texas Registered Engineering Firm F-533

SURVEYED BY: AMANI ENGR.
FB NO. P-6335

STATE OF TEXAS
H. A. FOROUZAN
77748
REGISTERED PROFESSIONAL ENGINEER
11/18/2025

CITY OF HOUSTON
HOUSTON PUBLIC WORKS

LIFT STATION REHABILITATION & RECONSTRUCTION CONSENT DECREE

CHERRY OAK LIFT STATION CONTROL CABINET EQUIPMENT LAYOUT

I-17

WBS NUMBER	FOR CITY OF HOUSTON USE ONLY
R-000267-0175-4	
DRAWING SCALE	
AS SHOWN	
CITY OF HOUSTON PM	
NP NAWARAJ PANTA, P.E.	
SHEET NO. 107 OF 312	

NO.	DATE	REVISION	APP.

FILE PATH: C:\Users\dkwong\Documents\Cherry Oak\Cherry Oak_I-05.dwg
PLOT STYLE: GAI.ctb PLOTTED: 11/21/2025 10:58 PM

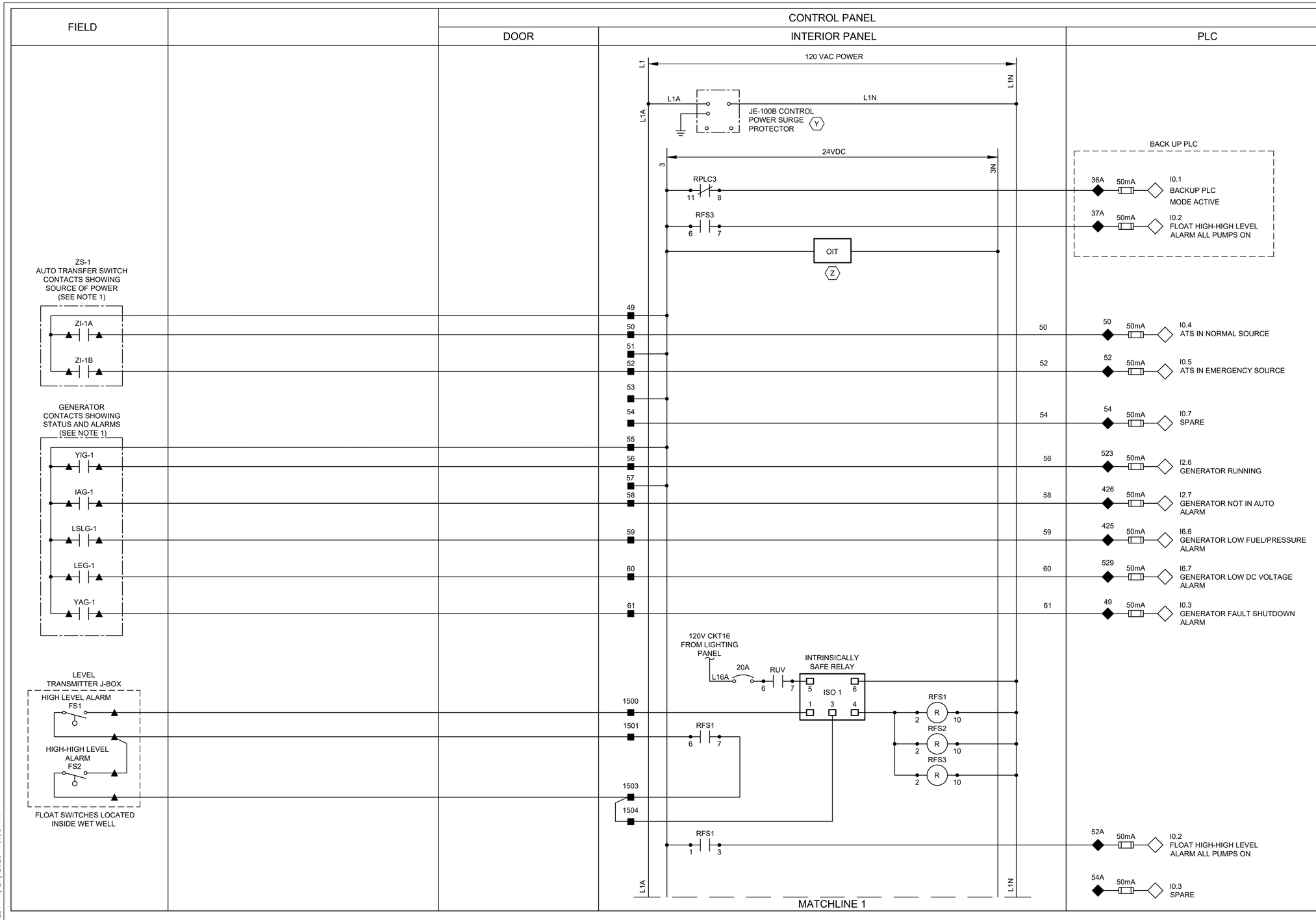

LEGEND

- △ DEVICE OR FIELD TERMINAL LOCATED AT MOTOR
- ✳ DEVICE OR FIELD TERMINAL LOCATED REMOTE
- □ DEVICE OR FIELD TERMINAL LOCATED AT MCC/POWER PANEL
- ■ FIELD TERMINAL LOCATED AT CONTROL PANEL
- ▲ REMOTE TERMINAL
- ● DEVICE TERMINAL NO.
- ◆ PLC INTERFACE TERMINAL

NOTES:

1. PROVIDE AUTO TRANSFER SWITCH AND GENERATOR DRY CONTACT.
2. ALL FLOAT CONTROL CIRCUIT WIRES COLOR SHALL BE YELLOW.

NO.	DATE	REVISION	APP.

GAI
Gupta & Associates, Inc.
CONSULTING ENGINEERING
Registration No. F-2593
302 Dennis St.,
Houston, Texas 77006
Tel: 713-636-2936
Fax: 713-636-2967
email: hforouzan@gaiconsulting.com

ARCADIS
Infrastructure · Water · Environment · Buildings
1330 Post Oak Blvd, Suite 2250
Houston, TX 77056
Tel: 713-953-4800
Fax: 713-977-4620
www.arcadis.com
Texas Registered Engineering Firm F-533

SURVEYED BY: AMANI ENGR.
FB NO. P-6335

STATE OF TEXAS
H. A. FOROUZAN
77748
REGISTERED
PROFESSIONAL ENGINEER
11/18/2025

CITY OF HOUSTON
HOUSTON PUBLIC WORKS

LIFT STATION REHABILITATION & RECONSTRUCTION
CONSENT DECREE

CHERRY OAK LIFT STATION CONTROL WIRING DIAGRAM-I

I-18

WBS NUMBER	FOR CITY OF HOUSTON USE ONLY
R-000267-0175-4	
DRAWING SCALE	
NONE	
CITY OF HOUSTON PM	
NP NAWARAJ PANTA, P.E.	
SHEET NO. 108 OF 312	

FILE PATH: C:\Users\dkwong\Documents\Cherry Oak\Cherry Oak_I-06.dwg
PLOT STYLE: GAI.ctb PLOTTED: 11/21/2025 10:58 PM

FIELD	MOTOR CONTROL CENTER (INDOOR)	CONTROL PANEL	
		DOOR	INTERIOR PANEL

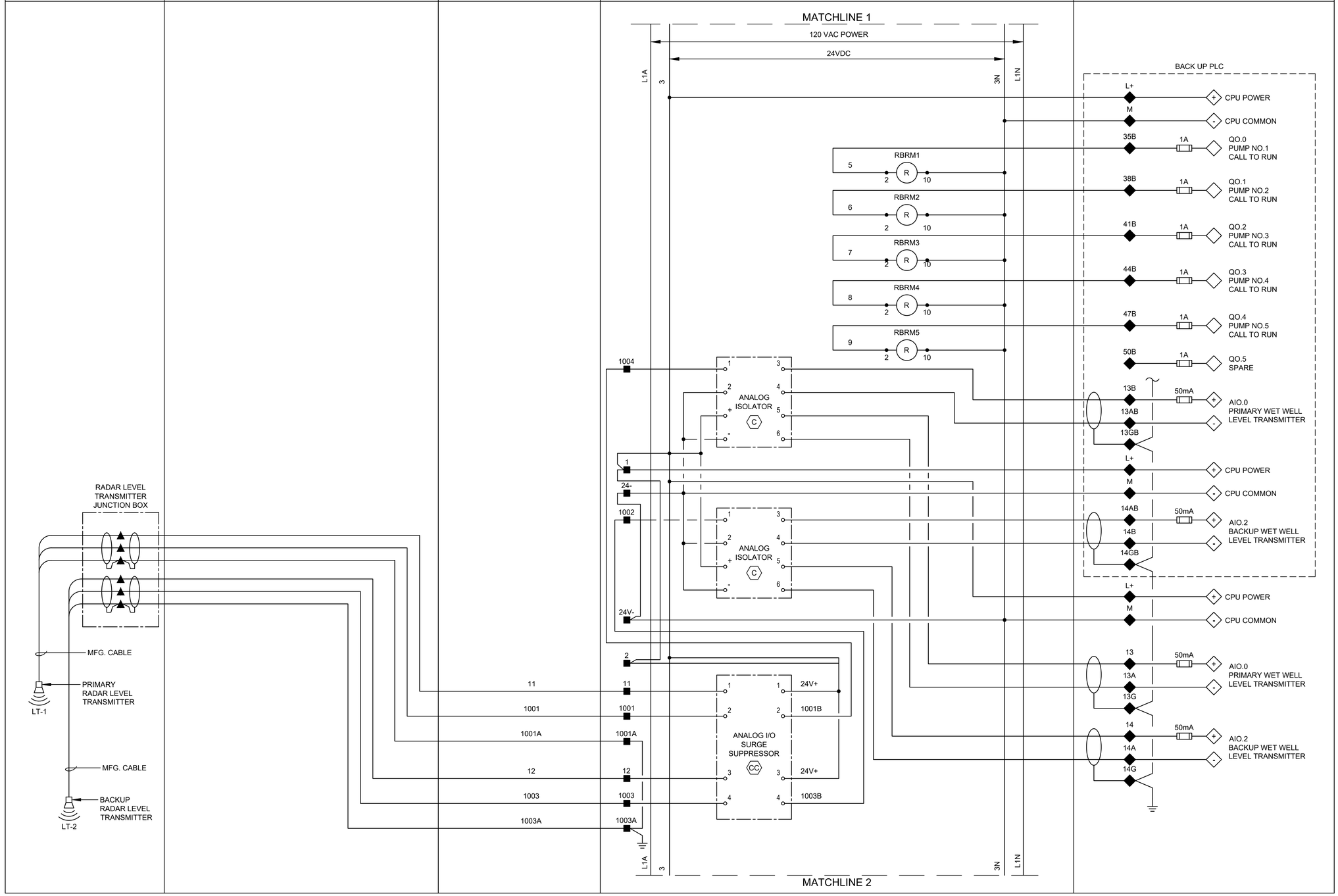

LEGEND

- △ DEVICE OR FIELD TERMINAL LOCATED AT MOTOR
- ✳ DEVICE OR FIELD TERMINAL LOCATED REMOTE
- □ DEVICE OR FIELD TERMINAL LOCATED AT MCC/POWER PANEL
- ■ FIELD TERMINAL LOCATED AT CONTROL PANEL
- ▲ REMOTE TERMINAL
- ● DEVICE TERMINAL NO.
- ◆ PLC INTERFACE TERMINAL

NO.	DATE	REVISION	APP.

GAI
Gupta & Associates, Inc.
CONSULTING ENGINEERING
Registration No. F-2593
302 Dennis St.,
Houston, Texas 77006
Tel: 713-636-2936
Fax: 713-636-2987
email: hforouzan@gaiconsulting.com

ARCADIS
Infrastructure · Water · Environment · Buildings
1330 Post Oak Blvd, Suite 2250
Houston, TX 77056
Tel: 713-953-4800
Fax: 713-977-4620
www.arcadis.com
Texas Registered Engineering Firm F-533

STATE OF TEXAS
H. A. FOROUZAN
77748
REGISTERED
PROFESSIONAL ENGINEER
11/18/2025

SURVEYED BY: AMANI ENGR.
FB NO. P-6335

CITY OF HOUSTON

HOUSTON PUBLIC WORKS

LIFT STATION REHABILITATION & RECONSTRUCTION CONSENT DECREE

CHERRY OAK LIFT STATION CONTROL WIRING DIAGRAM-II

I-19

WBS NUMBER	FOR CITY OF HOUSTON USE ONLY
R-000267-0175-4	
DRAWING SCALE	
NONE	
CITY OF HOUSTON PM	
NP NAWARAJ PANTA, P.E.	
SHEET NO. 109 OF 312	

FILE PATH: C:\Users\dkwong\Documents\Cherry Oak\Cherry Oak_I-07.dwg
PLOT STYLE: GAI.ctb PLOTTED: 11/21/2025 10:58 PM

FIELD	MOTOR CONTROL CENTER	CONTROL PANEL	
		DOOR	INTERIOR PANEL

MATCHLINE 2

120 VAC POWER

24VDC

L1A

24+

24-

L1N

M1 M2 M3 M4 9

10

19

20

RFLP

R

2 10

1M DI COMMON

2M AI COMMON

1L DO POWER

3 DO POWER

L1

N

MS

30 1A Q0.0 SPARE

32 50mA I0.0 PLC INTRUSION ALARM

MOTION SWITCH

L1

N

MS

MOTION SWITCH

34

34

RUV

R

2 10

34 50mA I0.1 PHASE FAILURE UNDER VOLTAGE

37 50mA I0.3 SPARE

38 50mA Q0.1 PLC MODE ACTIVE

RPLC1

R

2 10

RPLC2

R

2 10

YI-1

G

PRIMARY PLC

41 50mA I0.2 SPARE

BACK UP PLC

33B 50mA Q0.6 SPARE

RPLC3

R

2 10

RPLC3

6 5

ØA ØB ØC

JE-100D PHASE MONITOR

7 8 9 10 11 12

N/C

YI-2

G

BACKUP PLC

YI-2 BUILDING EXTERIOR ALARM LIGHT

R

45 50mA Q0.2 HIGH LEVEL ALARM

BACK UP PLC

18B 50mA I0.0 PHASE FAILURE UNDER VOLTAGE

RUV

11 9

L1A

24+

24-

L1N

MATCHLINE 3

LEGEND

- △ DEVICE OR FIELD TERMINAL LOCATED AT MOTOR
- ✳ DEVICE OR FIELD TERMINAL LOCATED REMOTE
- □ DEVICE OR FIELD TERMINAL LOCATED AT MCC/POWER PANEL
- ■ FIELD TERMINAL LOCATED AT CONTROL PANEL
- ▲ REMOTE TERMINAL
- ● DEVICE TERMINAL NO.
- ◆ PLC INTERFACE TERMINAL

NO.	DATE	REVISION	APP.

GAI
Gupta & Associates, Inc.
CONSULTING ENGINEERING
Registration No. F-2593
302 Dennis St.,
Houston, Texas 77006
Tel: 713-636-2936
Fax: 713-636-2987
email: hforouzan@gaiconsulting.com

ARCADIS
Infrastructure · Water · Environment · Buildings
1330 Post Oak Blvd, Suite 2250
Houston, TX 77056
Tel: 713-953-4800
Fax: 713-977-4620
www.arcadis.com
Texas Registered Engineering Firm F-533

SURVEYED BY: AMANI ENGR.
FB NO. P-6335

STATE OF TEXAS
H. A. FOROUZAN
77748
REGISTERED PROFESSIONAL ENGINEER
11/18/2025

CITY OF HOUSTON

HOUSTON PUBLIC WORKS

LIFT STATION REHABILITATION & RECONSTRUCTION CONSENT DECREE

CHERRY OAK LIFT STATION CONTROL WIRING DIAGRAM-III

I-20

WBS NUMBER	FOR CITY OF HOUSTON USE ONLY
R-000267-0175-4	
DRAWING SCALE	
NONE	
CITY OF HOUSTON PM	
NP NAWARAJ PANTA, P.E.	
SHEET NO. 110 OF 312	

FILE PATH: C:\Users\dkwong\Documents\Cherry Oak\Cherry Oak_I-08.dwg
PLOT STYLE: GAI.ctb PLOTTED: 11/21/2025 10:58 PM

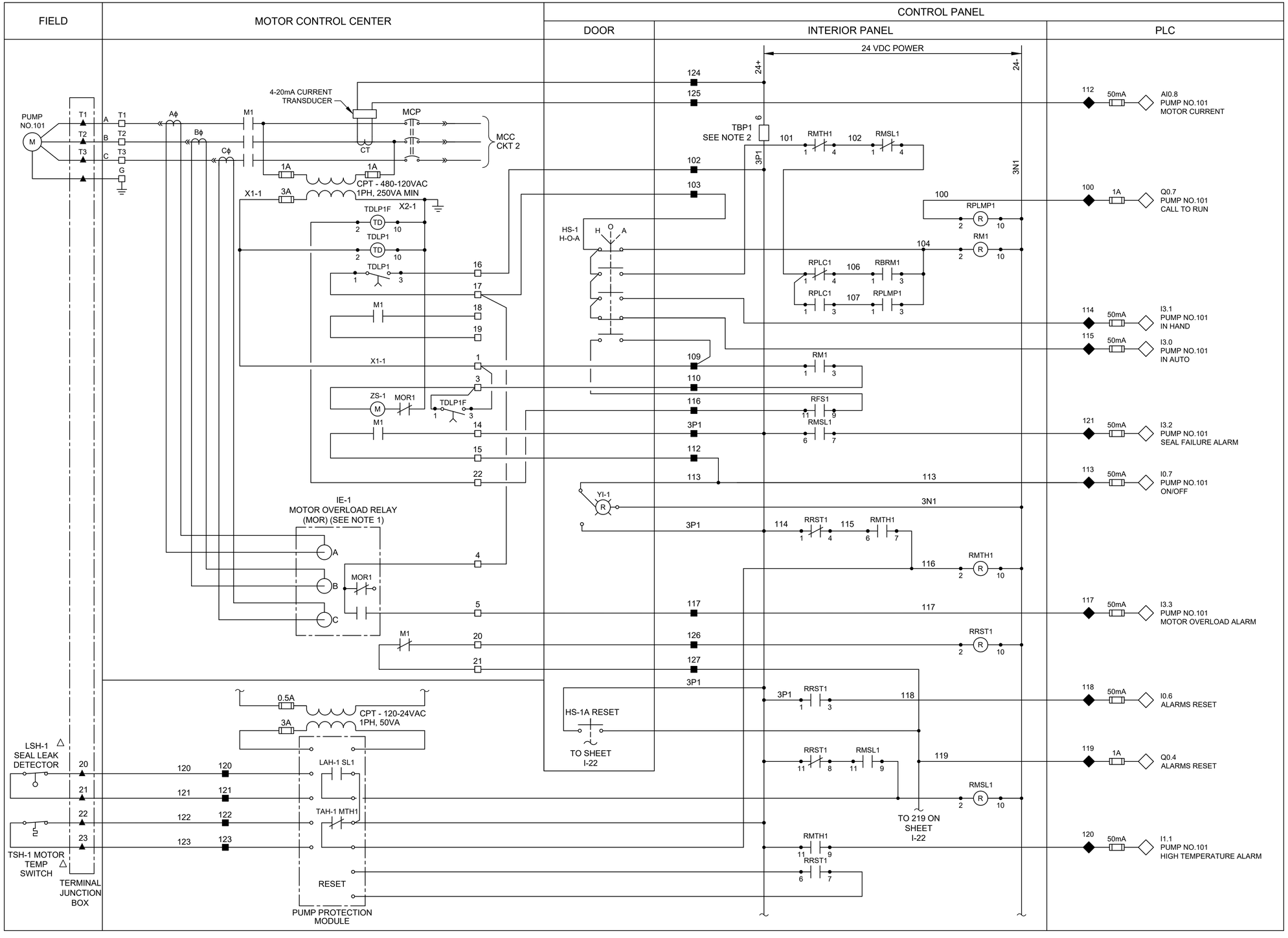

LEGEND

- △ DEVICE OR FIELD TERMINAL LOCATED AT MOTOR
- ✳ DEVICE OR FIELD TERMINAL LOCATED REMOTE
- □ DEVICE OR FIELD TERMINAL LOCATED AT MCC/POWER PANEL
- ■ FIELD TERMINAL LOCATED AT CONTROL PANEL
- ▲ REMOTE TERMINAL
- ● DEVICE TERMINAL NO.
- ◆ PLC INTERFACE TERMINAL

NOTES:

1. MOTOR OVERLOAD RELAY OUTPUT CONTACT SHOWN NORMALLY CLOSED WHEN RELAY IS DE-ENERGIZED, OPEN WHEN ENERGIZED, AND CLOSED WHEN IN ALARM. VERIFY OPERATION OF RELAY PROVIDED AND ADJUST CONNECTION OF RMOR AUXILIARY RELAYS.
2. FUSED TERMINAL ON TERMINAL BLOCK TB4 SEE CONTROL POWER AND COMMUNICATION WIRING DIAGRAM DRAWING NO. E-23.
3. ALL FLOAT CONTROL CIRCUIT WIRES COLOR SHALL BE YELLOW.

GAI
Gupta & Associates, Inc.
CONSULTING ENGINEERING
Registration No. F-2593
302 Dennis St., Houston, Texas 77006
Tel: 713-636-2936
Fax: 713-636-2987
email: hforouzan@gaiconsulting.com

ARCADIS
Infrastructure · Water · Environment · Buildings
1330 Post Oak Blvd, Suite 2250
Houston, TX 77056
Tel: 713-953-4800
Fax: 713-977-4620
www.arcadis.com
Texas Registered Engineering Firm F-533

SURVEYED BY: AMANI ENGR.
FB NO. P-6335

STATE OF TEXAS
H. A. FOROUZAN
77748
REGISTERED PROFESSIONAL ENGINEER
11/18/2025

CITY OF HOUSTON

HOUSTON PUBLIC WORKS

LIFT STATION REHABILITATION & RECONSTRUCTION CONSENT DECREE

CHERRY OAK LIFT STATION CONTROL WIRING DIAGRAM PUMP-101

I-21

WBS NUMBER	FOR CITY OF HOUSTON USE ONLY
R-000267-0175-4	
DRAWING SCALE	
NONE	
CITY OF HOUSTON PM	
NP NAWARAJ PANTA, P.E.	
SHEET NO. 111 OF 312	

NO.	DATE	REVISION	APP.

FILE PATH: C:\Users\dkwong\Documents\Cherry Oak\Cherry Oak_I-09.dwg
PLOT STYLE: GAI.ctb PLOTTED: 11/21/2025 10:58 PM

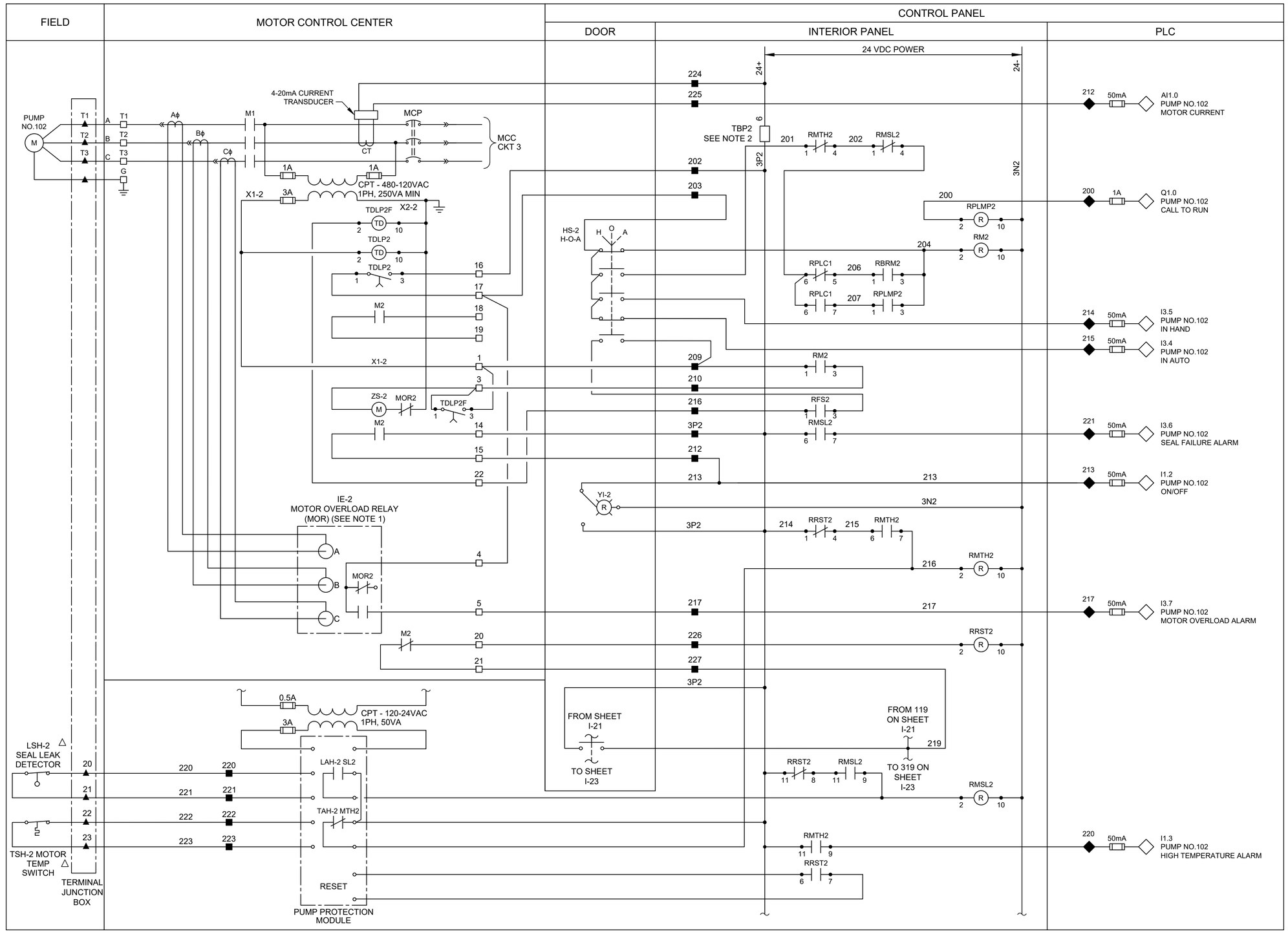

LEGEND

- △ DEVICE OR FIELD TERMINAL LOCATED AT MOTOR
- ✳ DEVICE OR FIELD TERMINAL LOCATED REMOTE
- □ DEVICE OR FIELD TERMINAL LOCATED AT MCC/POWER PANEL
- ■ FIELD TERMINAL LOCATED AT CONTROL PANEL
- ▲ REMOTE TERMINAL
- ● DEVICE TERMINAL NO.
- ◆ PLC INTERFACE TERMINAL

NOTES:

1. MOTOR OVERLOAD RELAY OUTPUT CONTACT SHOWN NORMALLY CLOSED WHEN RELAY IS DE-ENERGIZED, OPEN WHEN ENERGIZED, AND CLOSED WHEN IN ALARM. VERIFY OPERATION OF RELAY PROVIDED AND ADJUST CONNECTION OF RMOR AUXILIARY RELAYS.
2. FUSED TERMINAL ON TERMINAL BLOCK TB4 SEE CONTROL POWER AND COMMUNICATION WIRING DIAGRAM DRAWING NO. E-23.
3. ALL FLOAT CONTROL CIRCUIT WIRES COLOR SHALL BE YELLOW.

NO.	DATE	REVISION	APP.

GAI
Gupta & Associates, Inc.
CONSULTING ENGINEERING
Registration No. F-2593
302 Dennis St., Houston, Texas 77006
Tel: 713-636-2936
Fax: 713-636-2987
email: hforouzan@gaiconsulting.com

ARCADIS
Infrastructure · Water · Environment · Buildings
1330 Post Oak Blvd, Suite 2250
Houston, TX 77056
Tel: 713-953-4800
Fax: 713-977-4620
www.arcadis.com
Texas Registered Engineering Firm F-533

SURVEYED BY: AMANI ENGR.
FB NO. P-6335

STATE OF TEXAS
H. A. FOROUZAN
77748
REGISTERED PROFESSIONAL ENGINEER
11/18/2025

CITY OF HOUSTON

HOUSTON PUBLIC WORKS

LIFT STATION REHABILITATION & RECONSTRUCTION CONSENT DECREE

CHERRY OAK LIFT STATION CONTROL WIRING DIAGRAM PUMP-102

I-22

WBS NUMBER	FOR CITY OF HOUSTON USE ONLY
R-000267-0175-4	
DRAWING SCALE	
NONE	
CITY OF HOUSTON PM	
NP NAWARAJ PANTA, P.E.	
SHEET NO. 112 OF 312	

FILE PATH: C:\Users\dkwong\Documents\Cherry Oak\Cherry Oak_I-10.dwg
PLOT STYLE: GAI.ctb PLOTTED: 11/21/2025 10:58 PM

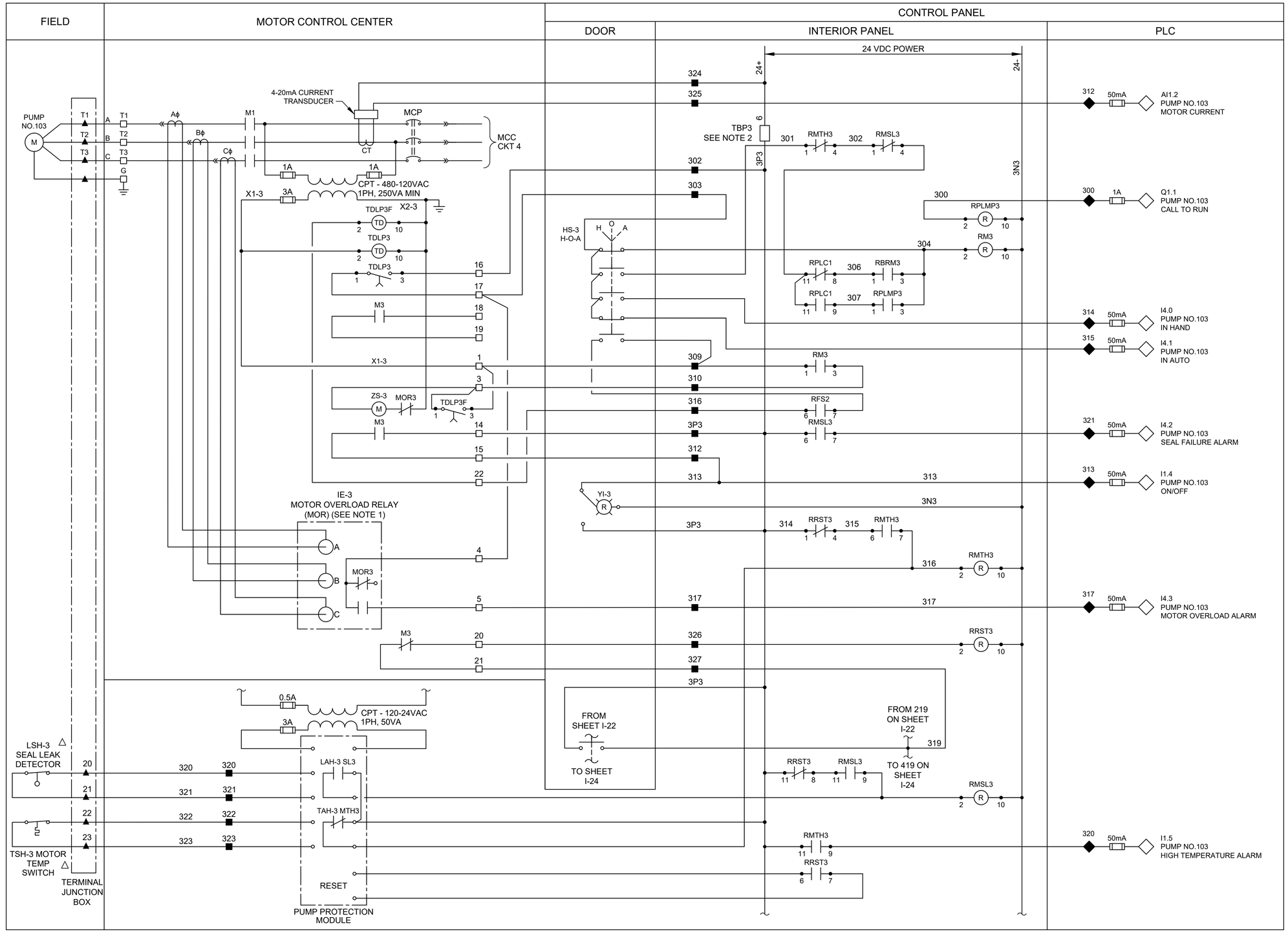

LEGEND

- △ DEVICE OR FIELD TERMINAL LOCATED AT MOTOR
- ✳ DEVICE OR FIELD TERMINAL LOCATED REMOTE
- □ DEVICE OR FIELD TERMINAL LOCATED AT MCC/POWER PANEL
- ■ FIELD TERMINAL LOCATED AT CONTROL PANEL
- ▲ REMOTE TERMINAL
- ● DEVICE TERMINAL NO.
- ◆ PLC INTERFACE TERMINAL

NOTES:

1. MOTOR OVERLOAD RELAY OUTPUT CONTACT SHOWN NORMALLY CLOSED WHEN RELAY IS DE-ENERGIZED, OPEN WHEN ENERGIZED, AND CLOSED WHEN IN ALARM. VERIFY OPERATION OF RELAY PROVIDED AND ADJUST CONNECTION OF RMOR AUXILIARY RELAYS.
2. FUSED TERMINAL ON TERMINAL BLOCK TB4 SEE CONTROL POWER AND COMMUNICATION WIRING DIAGRAM DRAWING NO. E-23.
3. ALL FLOAT CONTROL CIRCUIT WIRES COLOR SHALL BE YELLOW.

NO.	DATE	REVISION	APP.

GAI
Gupta & Associates, Inc.
CONSULTING ENGINEERING
Registration No. F-2593
302 Dennis St., Houston, Texas 77006
Tel: 713-636-2936
Fax: 713-636-2967
email: hforouzan@gaiconsulting.com

ARCADIS
Infrastructure · Water · Environment · Buildings
1330 Post Oak Blvd, Suite 2250
Houston, TX 77056
Tel: 713-953-4800
Fax: 713-977-4620
www.arcadis.com
Texas Registered Engineering Firm F-533

SURVEYED BY: AMANI ENGR.
FB NO. P-6335

STATE OF TEXAS · H. A. FOROUZAN · 77748 · REGISTERED PROFESSIONAL ENGINEER
11/18/2025

CITY OF HOUSTON

HOUSTON PUBLIC WORKS

LIFT STATION REHABILITATION & RECONSTRUCTION CONSENT DECREE

CHERRY OAK LIFT STATION CONTROL WIRING DIAGRAM PUMP-103

I-23

WBS NUMBER	FOR CITY OF HOUSTON USE ONLY
R-000267-0175-4	
DRAWING SCALE	
NONE	
CITY OF HOUSTON PM	
NP NAWARAJ PANTA, P.E.	
SHEET NO. 113 OF 312	

FILE PATH: C:\Users\dkwong\Documents\Cherry Oak\Cherry Oak_I-11.dwg
PLOT STYLE: GAI.ctb PLOTTED: 11/21/2025 10:58 PM

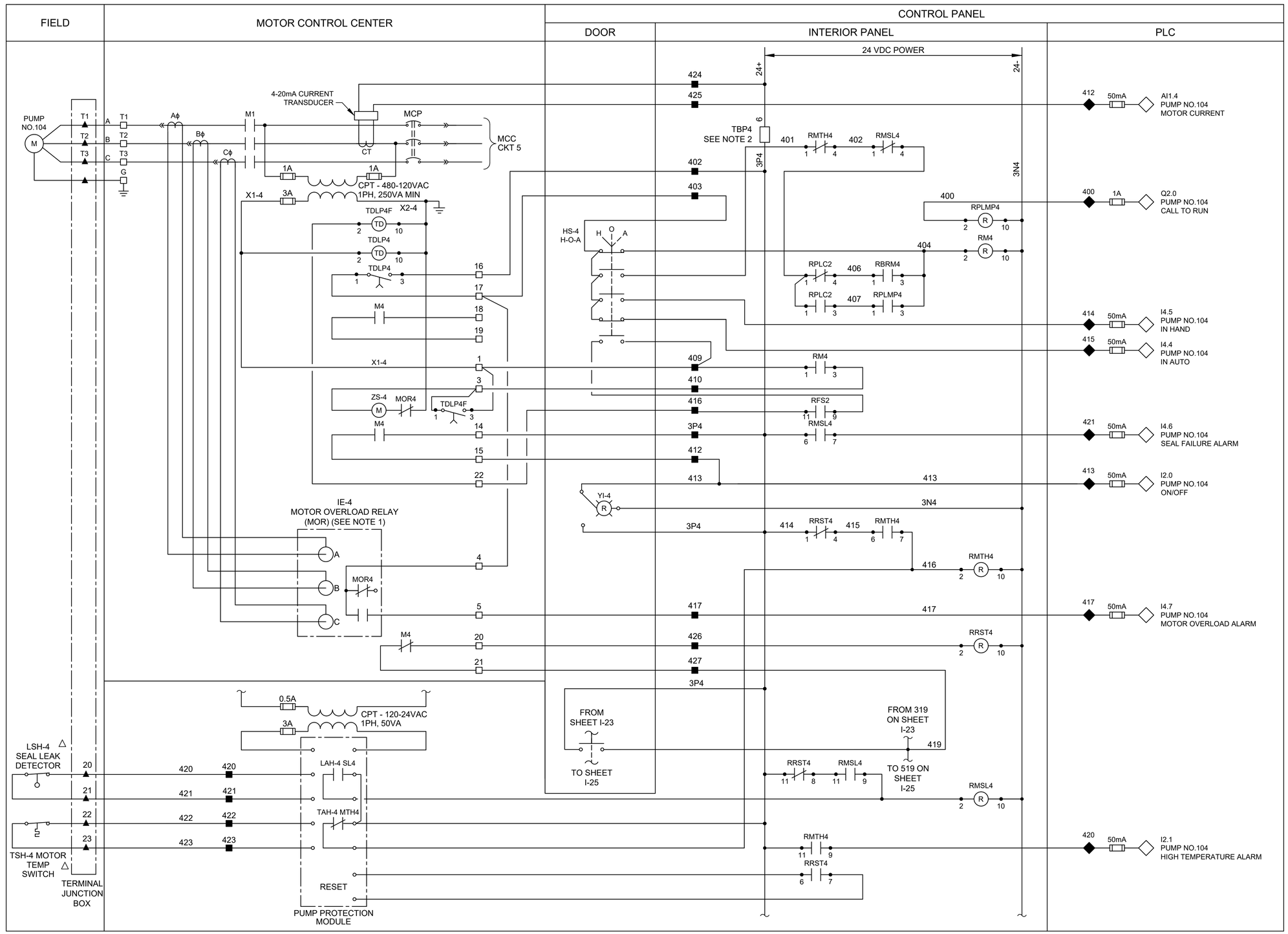

LEGEND

- △ DEVICE OR FIELD TERMINAL LOCATED AT MOTOR
- ✳ DEVICE OR FIELD TERMINAL LOCATED REMOTE
- □ DEVICE OR FIELD TERMINAL LOCATED AT MCC/POWER PANEL
- ■ FIELD TERMINAL LOCATED AT CONTROL PANEL
- ▲ REMOTE TERMINAL
- ● DEVICE TERMINAL NO.
- ◆ PLC INTERFACE TERMINAL

NOTES:

1. MOTOR OVERLOAD RELAY OUTPUT CONTACT SHOWN NORMALLY CLOSED WHEN RELAY IS DE-ENERGIZED, OPEN WHEN ENERGIZED, AND CLOSED WHEN IN ALARM. VERIFY OPERATION OF RELAY PROVIDED AND ADJUST CONNECTION OF RMOR AUXILIARY RELAYS.
2. FUSED TERMINAL ON TERMINAL BLOCK TB4 SEE CONTROL POWER AND COMMUNICATION WIRING DIAGRAM DRAWING NO. E-23.
3. ALL FLOAT CONTROL CIRCUIT WIRES COLOR SHALL BE YELLOW.

GAI
Gupta & Associates, Inc.
CONSULTING ENGINEERING
Registration No. F-2593
302 Dennis St.,
Houston, Texas 77006
Tel: 713-636-2936
Fax: 713-636-2987
email: hforouzan@gaiconsulting.com

ARCADIS
Infrastructure · Water · Environment · Buildings
1330 Post Oak Blvd, Suite 2250
Houston, TX 77056
Tel: 713-953-4800
Fax: 713-977-4620
www.arcadis.com
Texas Registered Engineering Firm F-533

SURVEYED BY: AMANI ENGR.
FB NO. P-6335

STATE OF TEXAS
H. A. FOROUZAN
77748
REGISTERED PROFESSIONAL ENGINEER
11/18/2025

CITY OF HOUSTON

HOUSTON PUBLIC WORKS

LIFT STATION REHABILITATION & RECONSTRUCTION CONSENT DECREE

CHERRY OAK LIFT STATION CONTROL WIRING DIAGRAM PUMP-104

I-24

WBS NUMBER	FOR CITY OF HOUSTON USE ONLY
R-000267-0175-4	
DRAWING SCALE	
NONE	
CITY OF HOUSTON PM	
NP NAWARAJ PANTA, P.E.	
SHEET NO. 114 OF 312	

NO.	DATE	REVISION	APP.

FILE PATH: C:\Users\dkwong\Documents\Cherry Oak\Cherry Oak_I-12.dwg
PLOT STYLE: GAI.ctb PLOTTED: 11/21/2025 10:58 PM

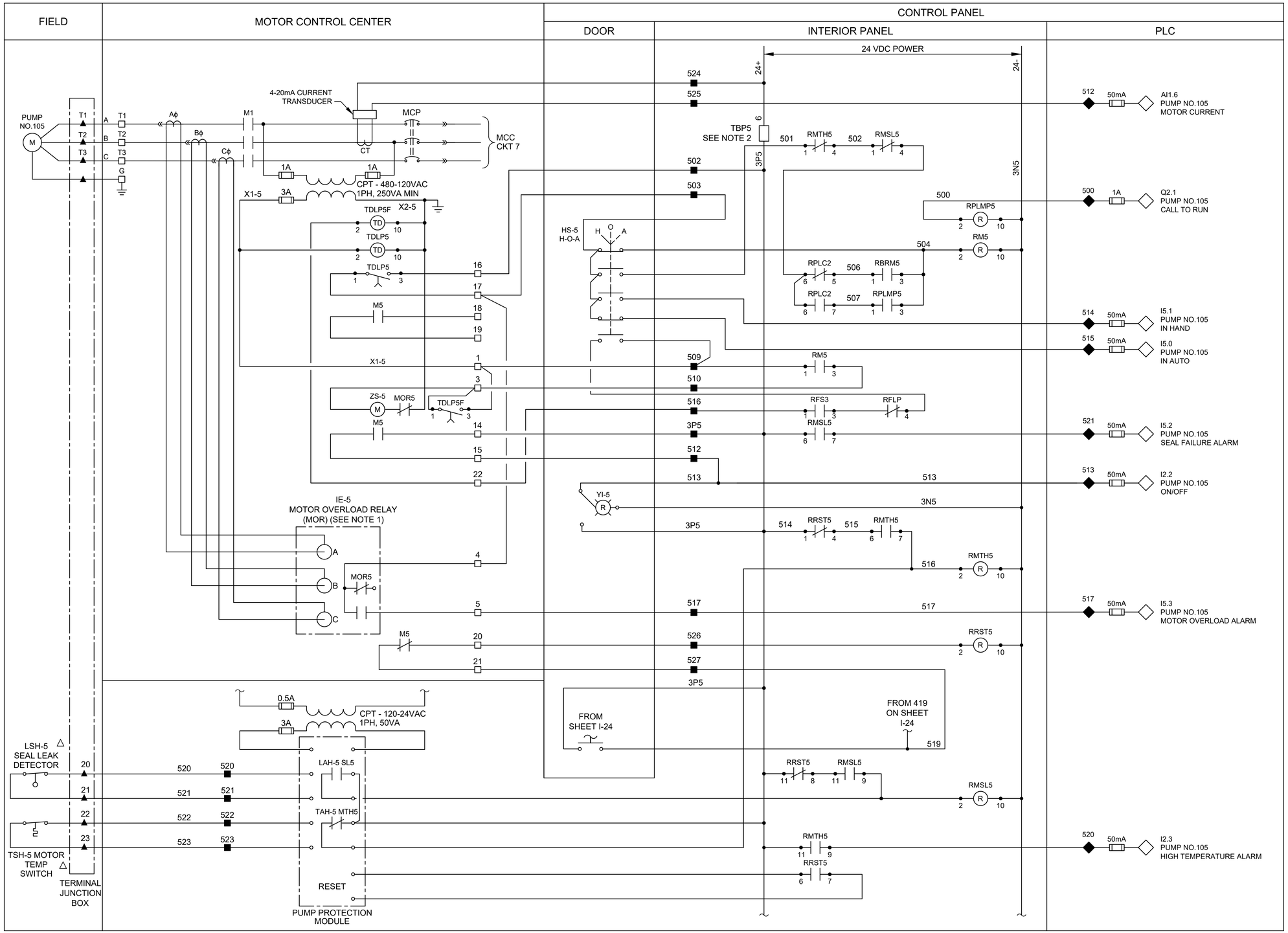

LEGEND

- △ DEVICE OR FIELD TERMINAL LOCATED AT MOTOR
- ✳ DEVICE OR FIELD TERMINAL LOCATED REMOTE
- □ DEVICE OR FIELD TERMINAL LOCATED AT MCC/POWER PANEL
- ■ FIELD TERMINAL LOCATED AT CONTROL PANEL
- ▲ REMOTE TERMINAL
- ● DEVICE TERMINAL NO.
- ◆ PLC INTERFACE TERMINAL

NOTES:

1. MOTOR OVERLOAD RELAY OUTPUT CONTACT SHOWN NORMALLY CLOSED WHEN RELAY IS DE-ENERGIZED, OPEN WHEN ENERGIZED, AND CLOSED WHEN IN ALARM. VERIFY OPERATION OF RELAY PROVIDED AND ADJUST CONNECTION OF RMOR AUXILIARY RELAYS.
2. FUSED TERMINAL ON TERMINAL BLOCK TB4 SEE CONTROL POWER AND COMMUNICATION WIRING DIAGRAM DRAWING NO. E-23.
3. ALL FLOAT CONTROL CIRCUIT WIRES COLOR SHALL BE YELLOW.

GAI
Gupta & Associates, Inc.
CONSULTING ENGINEERING
Registration No. F-2593
302 Dennis St., Houston, Texas 77006
Tel: 713-636-2936
Fax: 713-636-2987
email: hforouzan@gaiconsulting.com

ARCADIS
Infrastructure · Water · Environment · Buildings
1330 Post Oak Blvd, Suite 2250
Houston, TX 77056
Tel: 713-953-4800
Fax: 713-977-4620
www.arcadis.com
Texas Registered Engineering Firm F-533

SURVEYED BY: AMANI ENGR.
FB NO. P-6335

STATE OF TEXAS
H. A. FOROUZAN
77748
REGISTERED PROFESSIONAL ENGINEER
11/18/2025

CITY OF HOUSTON

HOUSTON PUBLIC WORKS

LIFT STATION REHABILITATION & RECONSTRUCTION CONSENT DECREE

CHERRY OAK LIFT STATION CONTROL WIRING DIAGRAM PUMP-105

I-25

WBS NUMBER	FOR CITY OF HOUSTON USE ONLY
R-000267-0175-4	
DRAWING SCALE	
NONE	
CITY OF HOUSTON PM	
NP NAWARAJ PANTA, P.E.	
SHEET NO. 115 OF 312	

NO.	DATE	REVISION	APP.

FILE PATH: O:\H8103_Houston Lift Station Removal And Replacement (CMAR)\6 Drawings\Instrumentation And Control\Working\Cherry Oak\Cherry Oak_I-13.dwg
PLOT STYLE: COH.ctb PLOTTED: 11/21/2025 11:04 PM

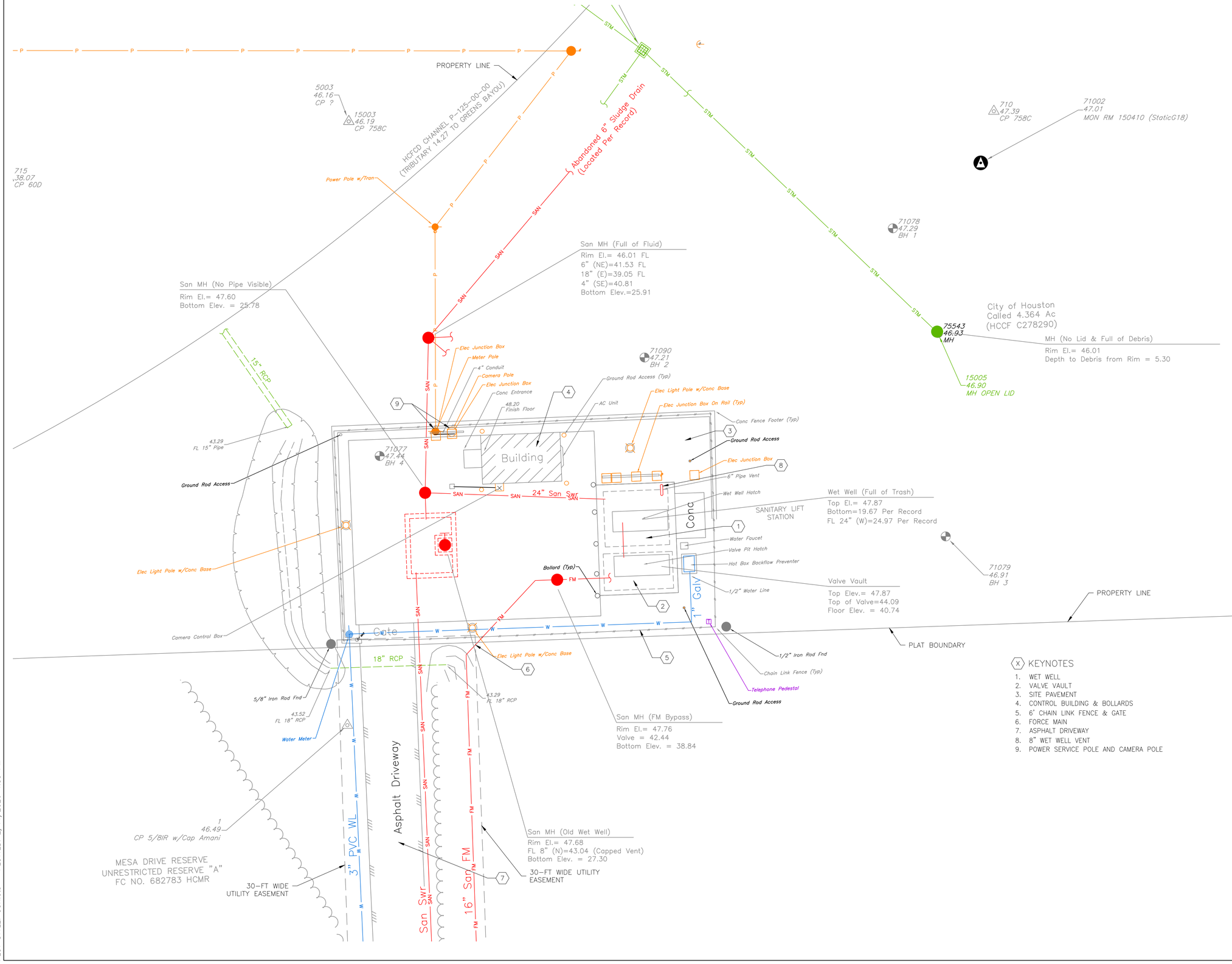

KEYNOTES

1. WET WELL
2. VALVE VAULT
3. SITE PAVEMENT
4. CONTROL BUILDING & BOLLARDS
5. 6' CHAIN LINK FENCE & GATE
6. FORCE MAIN
7. ASPHALT DRIVEWAY
8. 8" WET WELL VENT
9. POWER SERVICE POLE AND CAMERA POLE

N

0' 5' 10' 20'

HORIZ. 1"=10'

NO.	DATE	REVISION	APP.

NOTE: EXISTING WATER METER ID: 3002-9951

BENCHMARK:

STATIC GPS OBSERVATION MADE ON CITY OF HOUSTON MONUMENT 5662-8303 08/14/2024. A STEEL PIN LOCATED ABOUT 80 FEET NORTHEAST OF LIFT STATION AT SITE.
ELEVATION = 47.01' (NAVD 88 GEOID 18)

100 YEAR BFE = 45.1 FEET (NAVD 88, 2001 ADJ)

500 YEAR BFE = 46.9 FEET (NAVD 88, 2001 ADJ)

FEMA MAP NUMBER: 48201C0675M. PANEL 0705M

NOTICE:
FOR YOUR SAFETY, YOU ARE REQUIRED BY TEXAS LAW TO CALL 811 AT LEAST 48 HOURS BEFORE YOU DIG SO THAT UNDERGROUND LINES CAN BE MARKED. THIS SIGNATURE DOES NOT FULFILL YOUR OBLIGATION TO CALL 811

VERIFICATION OF PRIVATE UTILITY LINES

Mike Brower 02/17/26
Date

CenterPoint Energy natural gas utilities shown. (Gas service lines are not shown). This signature not be used for conflict verification.
Signature valid for six months.

Mike Brower 02/17/26
Date

CenterPoint Energy/UNDERGROUND Electrical Facilities Verification ONLY. (This signature verifies existing underground facilities – not to be used for conflict verification)
Signature valid for six months.

Elvina Allison 02/16/2026
Date

Approved for AT&T underground conduit facilities only.
Signature valid for one year.

ARCADIS
Infrastructure · Water · Environment · Buildings
1330 Post Oak Blvd, Suite 2250
Houston, TX 77056
Tel: 713-953-4800
Fax: 713-977-4620
www.arcadis.com
Texas Registered Engineering Firm F-533

SURVEYED BY: AMANI ENGR.
FB NO. P-6335

STATE OF TEXAS
DAVID F. RIDGWAY
105134
LICENSED PROFESSIONAL ENGINEER
01/16/2026

CITY OF HOUSTON
HOUSTON PUBLIC WORKS

LIFT STATION REHABILITATION & RECONSTRUCTION CONSENT DECREE

RED GULLY LIFT STATION EXISTING SITE PLAN

C-21

WBS NUMBER	FOR CITY OF HOUSTON USE ONLY
R-000267-0175-4	
DRAWING SCALE	
AS NOTED	
CITY OF HOUSTON PM	
NP NAWARAJ PANTA, P.E.	
SHEET NO. 116 OF 312	

FILE PATH: C:\Users\omesson\DC\ACCDocs\Arcadis ACC US\AUS-30126616-Lift Station Rehab And Reconstruct CMAR\Project Files\10_WIP\40-Red Gully\10T-C-Civil\RG.C-21.dwg
PLOT STYLE: COM.ctb PLOTTED: 2/11/2026 4:33 PM

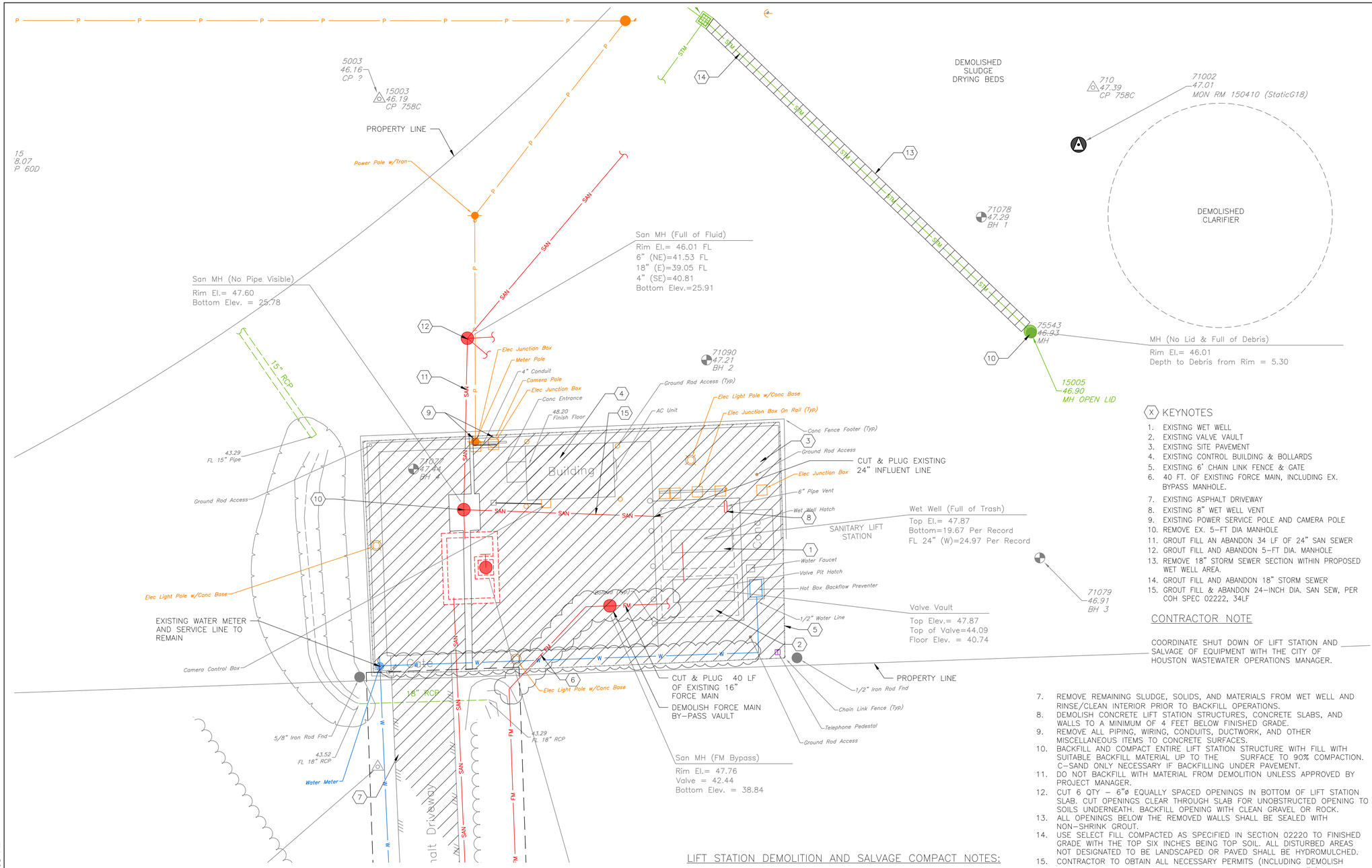

NO.	DATE	REVISION	APP.

LEGEND:

TO BE DEMOLISHED

TO BE REMOVED OR ABANDONDED

KEYNOTES

1. EXISTING WET WELL
2. EXISTING VALVE VAULT
3. EXISTING SITE PAVEMENT
4. EXISTING CONTROL BUILDING & BOLLARDS
5. EXISTING 6' CHAIN LINK FENCE & GATE
6. 40 FT. OF EXISTING FORCE MAIN, INCLUDING EX. BYPASS MANHOLE.
7. EXISTING ASPHALT DRIVEWAY
8. EXISTING 8" WET WELL VENT
9. EXISTING POWER SERVICE POLE AND CAMERA POLE
10. REMOVE EX. 5-FT DIA MANHOLE
11. GROUT FILL AN ABANDON 34 LF OF 24" SAN SEWER
12. GROUT FILL AND ABANDON 5-FT DIA. MANHOLE
13. REMOVE 18" STORM SEWER SECTION WITHIN PROPOSED WET WELL AREA.
14. GROUT FILL AND ABANDON 18" STORM SEWER
15. GROUT FILL & ABANDON 24-INCH DIA. SAN SEW, PER COH SPEC 02222, 34LF

CONTRACTOR NOTE

COORDINATE SHUT DOWN OF LIFT STATION AND SALVAGE OF EQUIPMENT WITH THE CITY OF HOUSTON WASTEWATER OPERATIONS MANAGER.

SPECIAL NOTICE

ACCORDING TO THE LEAD & ASBESTOS REPORT, THE BOLLARDS ARE COATED WITH LEAD BASE PAINT. PLEASE FOLLOW RECONCOMMENDATION FOR HANDLING & DISPOSAL IN THE REPORT AND COMPLY WITH COH SPEC 02136

LIFT STATION DEMOLITION AND SALVAGE COMPACT NOTES:

1. DO NOT PROCEED WITH DEMOLITION OR REMOVAL OPERATIONS UNTIL AUTHORIZED BY PROJECT MANAGER. NO DEMOLITION SHALL BE PERFORMED UNTIL THE NEW LIFT STATION AND GRAVITY DIVERSION IS FULLY FUNCTIONAL.
2. PROVIDE SAFE WORKING CONDITIONS FOR EMPLOYEES THROUGHOUT DEMOLITION AND REMOVAL OPERATIONS. OBSERVE SAFETY REQUIREMENTS FOR WORK BELOW GRADE.
3. MAINTAIN SAFE ACCESS TO ADJACENT PROPERTY AND BUILDINGS. DO NOT OBSTRUCT ROADWAYS, SIDEWALKS OR PASSAGEWAYS ADJACENT TO THE WORK.
4. PERFORM DEMOLITION IN A MANNER TO PREVENT DAMAGE TO ADJACENT PROPERTY. REPAIR DAMAGE TO CITY PROPERTY OR ADJACENT PROPERTY AND FACILITIES.
5. THE CONTRACTOR SHALL BE RESPONSIBLE FOR SAFETY AND INTEGRITY OF ADJACENT STRUCTURES AND SHALL BE LIABLE FOR ANY DAMAGE DUE TO MOVEMENT OR SETTLEMENT. PROVIDE PROPER FRAMING AND SHORING NECESSARY FOR SUPPORT. CEASE OPERATIONS IF AN ADJACENT STRUCTURE APPEARS TO BE ENDANGERED. RESUME DEMOLITION ONLY AFTER PROPER PROTECTIVE MEASURES HAVE BEEN TAKEN.
6. NOTIFY AND COORDINATE WITH UTILITY COMPANY AND ADJACENT BUILDING OCCUPANTS WHEN TEMPORARY INTERRUPTION OF UTILITY SERVICE IS NECESSARY.
7. REMOVE REMAINING SLUDGE, SOLIDS, AND MATERIALS FROM WET WELL AND RINSE/CLEAN INTERIOR PRIOR TO BACKFILL OPERATIONS.
8. DEMOLISH CONCRETE LIFT STATION STRUCTURES, CONCRETE SLABS, AND WALLS TO A MINIMUM OF 4 FEET BELOW FINISHED GRADE.
9. REMOVE ALL PIPING, WIRING, CONDUITS, DUCTWORK, AND OTHER MISCELLANEOUS ITEMS TO CONCRETE SURFACES.
10. BACKFILL AND COMPACT ENTIRE LIFT STATION STRUCTURE WITH FILL WITH SUITABLE BACKFILL MATERIAL UP TO THE SURFACE TO 90% COMPACTION. C-SAND ONLY NECESSARY IF BACKFILLING UNDER PAVEMENT.
11. DO NOT BACKFILL WITH MATERIAL FROM DEMOLITION UNLESS APPROVED BY PROJECT MANAGER.
12. CUT 6 QTY - 6"ø EQUALLY SPACED OPENINGS IN BOTTOM OF LIFT STATION SLAB. CUT OPENINGS CLEAR THROUGH SLAB FOR UNOBSTRUCTED OPENING TO SOILS UNDERNEATH. BACKFILL OPENING WITH CLEAN GRAVEL OR ROCK.
13. ALL OPENINGS BELOW THE REMOVED WALLS SHALL BE SEALED WITH NON-SHRINK GROUT.
14. USE SELECT FILL COMPACTED AS SPECIFIED IN SECTION 02220 TO FINISHED GRADE WITH THE TOP SIX INCHES BEING TOP SOIL. ALL DISTURBED AREAS NOT DESIGNATED TO BE LANDSCAPED OR PAVED SHALL BE HYDROMULCHED.
15. CONTRACTOR TO OBTAIN ALL NECESSARY PERMITS (INCLUDING DEMOLISH PERMITS, COH FORM NO. CE-1075 & TEXAS DSHS FORM APB#5) REQUIRED. CONTRACTOR SHALL COORDINATE DISCONNECT WITH CENTERPOINT ENERGY TO ELECTRICAL POWER.
16. THE CITY OF HOUSTON HAS THE FIRST RIGHT OF REFUSAL OF ANY EQUIPMENT OR MATERIAL REMOVED. CONTACT CITY PROJECT MANAGER.AT LEAST 72 HOURS PRIOR TO DEMOLITION IN ORDER TO COORDINATE REMOVAL OF ANY ITEMS THE CITY WISHES TO CLAIM AS SALVAGE. THE CONTRACTOR SHALL DELIVER ALL SALVAGED ITEMS TO A LOCATION, WITHIN THE CITY, DETERMINED BY THE CITY. THE CONTRACTOR SHALL PROPERLY DISPOSE OF ALL OTHER EQUIPMENT AND MATERIAL NOT IDENTIFIED FOR SALVAGE.
17. THE CONTRACTOR SHALL DISPOSE OF ANY LIQUID OR SOLID WASTE FOUND IN THE WET WELL AT A DISPOSAL FACILITY LICENSED & APPROVED BY THE STATE OF TEXAS. THE CONTRACTOR SHALL BE RESPONSIBLE FOR THE COST OF TRANSPORTATION, DISPOSAL & TESTING REQUIRED BY STATE & FEDERAL REGULATORY AGENCIES, & BY THE DISPOSAL FACILITY.
18. CONTRACTOR TO COORDINATE WITH CENTERPOINT ENERGY ON RELOCATION OF POWER POLE AND GUY.
19. ENTIRE SITE TO BE GRADED TO DRAIN AND SODDED PER COH SPEC 02922.

NOTICE:

FOR YOUR SAFETY, YOU ARE REQUIRED BY TEXAS LAW TO CALL 811 AT LEAST 48 HOURS BEFORE YOU DIG SO THAT UNDERGROUND LINES CAN BE MARKED. THIS SIGNATURE DOES NOT FULFILL YOUR OBLIGATION TO CALL 811

VERIFICATION OF PRIVATE UTILITY LINES

Mike Brower — 02/17/26 (Date)

CenterPoint Energy natural gas utilities shown. (Gas service lines are not shown). This signature not be used for conflict verification.

Signature valid for six months.

Mike Brower — 02/17/26 (Date)

CenterPoint Energy/UNDERGROUND Electrical Facilities Verification ONLY. (This signature verifies existing underground facilities – not to be used for conflict verification)

Signature valid for six months.

Elvina Allison — 02/18/2026 (Date)

Approved for AT&T underground conduit facilities only.
Signature valid for one year.

ARCADIS
Infrastructure · Water · Environment · Buildings
1330 Post Oak Blvd, Suite 2250
Houston, TX 77056
Tel: 713-953-4800
Fax: 713-977-4620
www.arcadis.com
Texas Registered Engineering Firm F-533

SURVEYED BY: AMANI ENGR.
FB NO. P-6335

STATE OF TEXAS
DAVID F. RIDGWAY
105134
LICENSED PROFESSIONAL ENGINEER
11/21/2025

CITY OF HOUSTON

HOUSTON PUBLIC WORKS

LIFT STATION REHABILITATION & RECONSTRUCTION CONSENT DECREE

RED GULLY LIFT STATION SITE DEMOLITION PLAN

C-22

WBS NUMBER	FOR CITY OF HOUSTON USE ONLY
R-000267-0175-4	
DRAWING SCALE	
AS NOTED	
CITY OF HOUSTON PM	
NP NAWARAJ PANTA, P.E.	
SHEET NO. 117 OF 312	

FILE PATH: C:\Users\gaikwada9548\DC\ACCDocs\Arcadis ACC US\AUS-30126616-Lift Station Rehab And Reconstruct CMAR\Project Files\10_WIP\40-Red Gully\10T-C-Civil\RG.C-21.dwg
PLOT STYLE: COH.ctb PLOTTED: 11/21/2025 10:08 PM

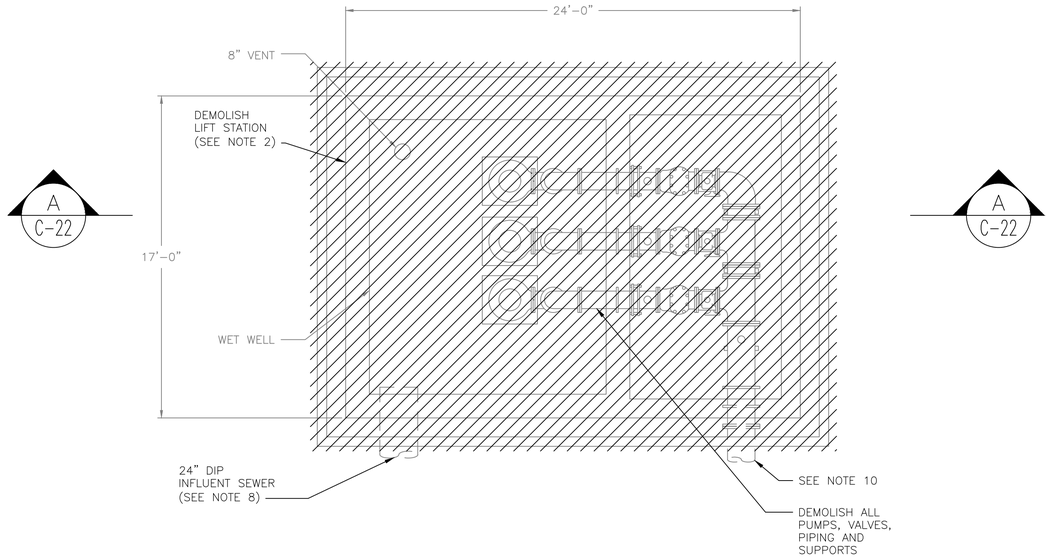

PLAN VIEW

0 2' 4' 8'

SCALE: 1/4"=1'-0"

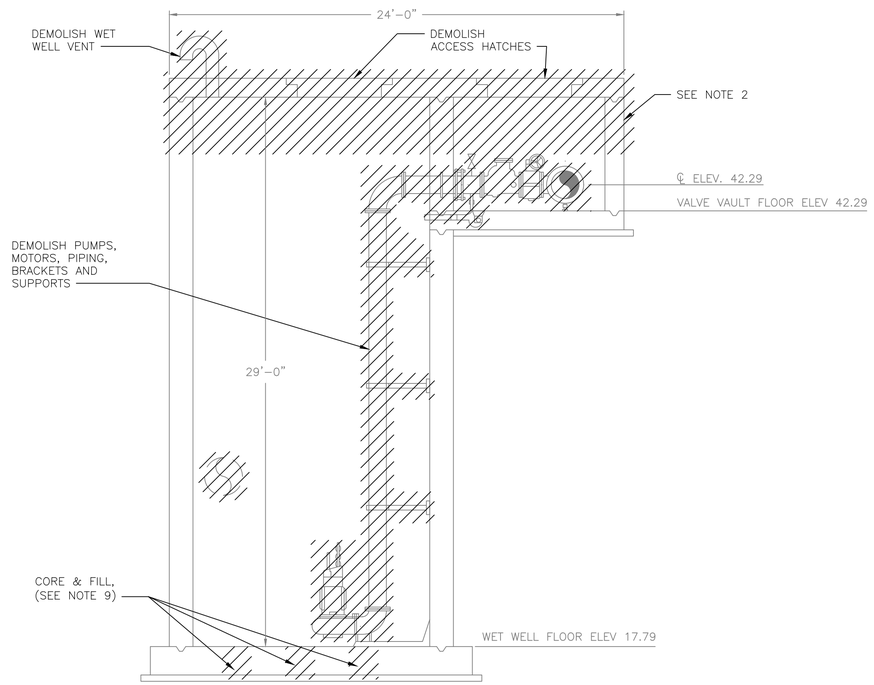

A SECTION

0 2' 4' 8'

SCALE: 1/4"=1'-0"

NO.	DATE	REVISION	APP.

NOTES:

1. THE BACKGROUND OF THIS DRAWING IS BASED ON RECORD DRAWING NO. 41449, PREPARED BY INFRASTRUCTURE ASSOCIATES, INC. CONTRACTOR IS RESPONSIBLE FOR VERIFYING EXISTING CONDITIONS PRIOR TO SUBMITTING BID. A CLAIM FOR CHANGED CONDITIONS BETWEEN THE EXISTING CONDITIONS AND THE RECORD DRAWINGS WILL NOT BE CONSIDERED.
2. DEMOLISH AND REMOVE WET WELL TO 4-FEET BELOW EXISTING GRADE. DEMOLISH AND REMOVE PAVEMENT STRUCTURE AND EQUIPMENT PADS. GRADE AREA TO DRAIN, BACKFILL AND PAVE. REFER TO SHEET C-21, NOTES 7, 8, 9, 14 & 20.
3. REMOVE AND SALVAGE ALL LADDERS, STAIRS, GRATING, PIPING, PUMPS, MOTORS, VENTS, MECHANICAL, ELECTRICAL AND INSTRUMENTATION EQUIPMENT.
4. REMOVE ALL PIPING, WIRING CONDUITS, DUCTWORK AND OTHER MISCELLANEOUS ITEMS ON CONCRETE SURFACES.
5. THE CITY OF HOUSTON HAS THE FIRST RIGHT OF REFUSAL OF ANY EQUIPMENT OR MATERIAL REMOVED. CONTACT CONSTRUCTION MANAGER AT LEAST 72 HOURS PRIOR TO DEMOLITION IN ORDER TO COORDINATE REMOVAL OF ANY ITEMS THE CITY WISHES TO CLAIM AS SALVAGED ITEMS TO A LOCATION WITHIN THE CITY. THE CONTRACTOR SHALL PROPERLY DISPOSE OF ALL OTHER MATERIAL NOT IDENTIFIED FOR SALVAGE.
6. THE EXISTING WET WELL SHALL BE CLEANED OF ALL DEBRIS, WASTEWATER DEMOLITION WASTE AND OTHER RESIDUES BY CERTIFIED, APPROVED CITY OF HOUSTON DISPOSAL CONTRACTOR.
7. CONTRACTOR SHALL OBTAIN CITY OF HOUSTON DEMOLITION PERMIT OR SUBMIT PROOF OF NON-APPLICABILITY TO COH CONSTRUCTION PROJECT MANAGER PRIOR TO THE STARTUP OR DEMOLITION ACTIVITIES AT THE SITE.
8. GROUT FILL & ABANDON-IN-PLACE EXISTING 24-INCH INFLUENT SEWER PIPE.
9. REFER TO SHEET C-21, NOTE 12.
10. SEE SHEET C-21 FOR CONTINUATION OF FORCE MAIN DEMOLITION EXTENT.

LEGEND:

TO BE DEMOLISHED

ARCADIS
Infrastructure · Water · Environment · Buildings
1330 Post Oak Blvd, Suite 2250
Houston, TX 77056
Tel: 713-953-4800
Fax: 713-977-4620
www.arcadis.com
Texas Registered Engineering Firm F-533

SURVEYED BY: AMANI ENGR.
FB NO. P-6335

STATE OF TEXAS
DAVID F. RIDGWAY
105134
LICENSED
PROFESSIONAL ENGINEER
11/21/2025

CITY OF HOUSTON

HOUSTON PUBLIC WORKS

LIFT STATION REHABILITATION & RECONSTRUCTION
CONSENT DECREE

RED GULLY LIFT STATION
WET WELL
DEMOLITION PLAN & SECTION

C-23

WBS NUMBER	FOR CITY OF HOUSTON USE ONLY
R-000267-0175-4	
DRAWING SCALE	
AS NOTED	
CITY OF HOUSTON PM	
NP NAWARAJ PANTA, P.E.	
SHEET NO. 118 OF 312	

FILE PATH: C:\Users\guldagak0287\DC\ACCDocs\Arcadis ACC US\AUS-30126616-Lift Station Rehab And Reconstruct CMAR\Project Files\10_WIP\40-Red Gully\10T-D-Demolition\C-22.dwg
PLOT STYLE: COH.ctb PLOTTED: 11/21/2025 8:10 PM

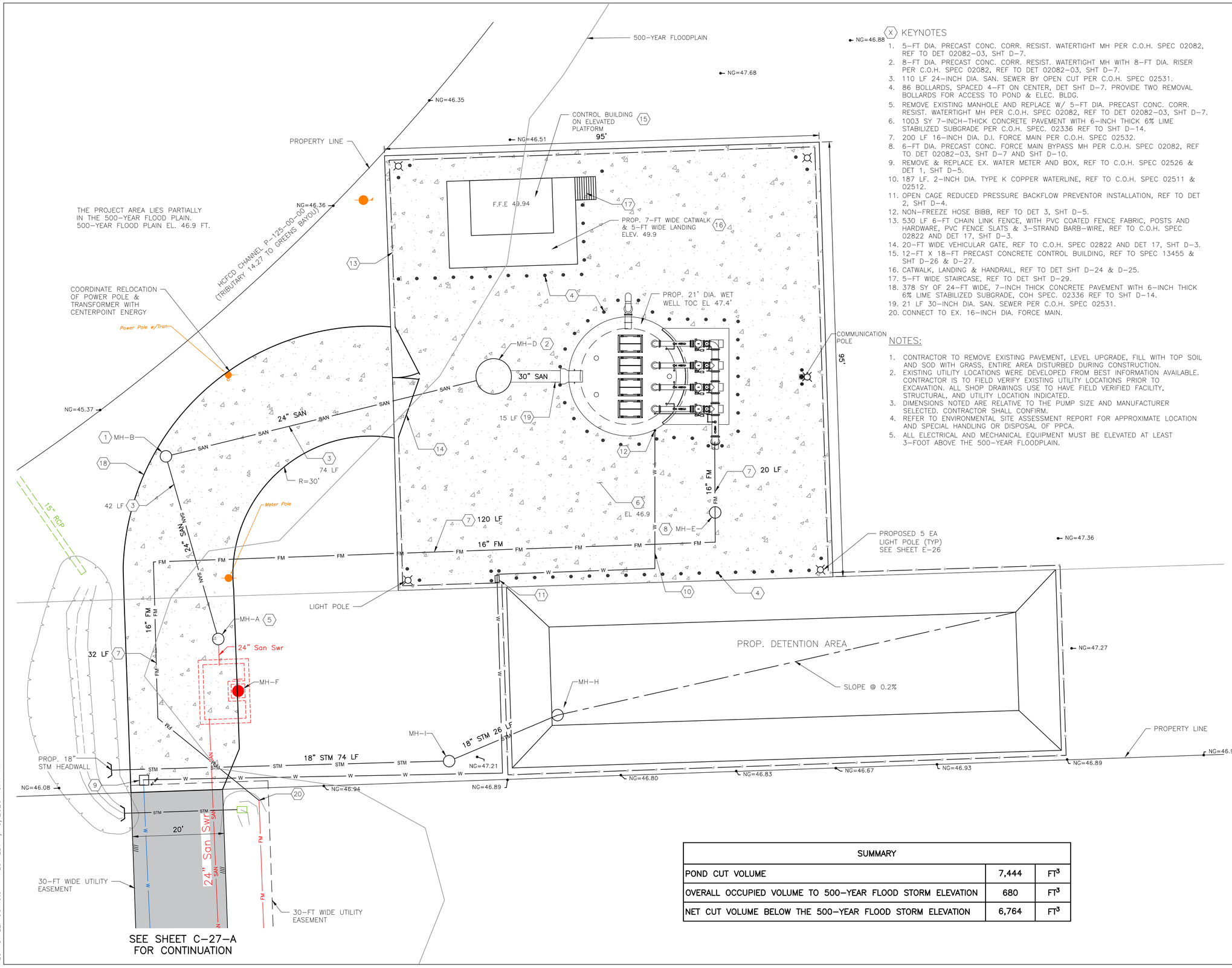

SEE SHEET C-27-A FOR CONTINUATION

KEYNOTES

1. 5-FT DIA. PRECAST CONC. CORR. RESIST. WATERTIGHT MH PER C.O.H. SPEC 02082, REF TO DET 02082-03, SHT D-7.
2. 8-FT DIA. PRECAST CONC. CORR. RESIST. WATERTIGHT MH WITH 8-FT DIA. RISER PER C.O.H. SPEC 02082, REF TO DET 02082-03, SHT D-7.
3. 110 LF 24-INCH DIA. SAN. SEWER BY OPEN CUT PER C.O.H. SPEC 02531.
4. 86 BOLLARDS, SPACED 4-FT ON CENTER, DET SHT D-7. PROVIDE TWO REMOVAL BOLLARDS FOR ACCESS TO POND & ELEC. BLDG.
5. REMOVE EXISTING MANHOLE AND REPLACE W/ 5-FT DIA. PRECAST CONC. CORR. RESIST. WATERTIGHT MH PER C.O.H. SPEC 02082, REF TO DET 02082-03, SHT D-7.
6. 1003 SY 7-INCH-THICK CONCRETE PAVEMENT WITH 6-INCH THICK 6% LIME STABILIZED SUBGRADE PER C.O.H. SPEC. 02336 REF TO SHT D-14.
7. 200 LF 16-INCH DIA. D.I. FORCE MAIN PER C.O.H. SPEC 02532.
8. 6-FT DIA. PRECAST CONC. FORCE MAIN BYPASS MH PER C.O.H. SPEC 02082, REF TO DET 02082-03, SHT D-7 AND SHT D-10.
9. REMOVE & REPLACE EX. WATER METER AND BOX, REF TO C.O.H. SPEC 02526 & DET 1, SHT D-5.
10. 187 LF. 2-INCH DIA. TYPE K COPPER WATERLINE, REF TO C.O.H. SPEC 02511 & 02512.
11. OPEN CAGE REDUCED PRESSURE BACKFLOW PREVENTOR INSTALLATION, REF TO DET 2, SHT D-4.
12. NON-FREEZE HOSE BIBB, REF TO DET 3, SHT D-5.
13. 530 LF 6-FT CHAIN LINK FENCE, WITH PVC COATED FENCE FABRIC, POSTS AND HARDWARE, PVC FENCE SLATS & 3-STRAND BARB-WIRE, REF TO C.O.H. SPEC 02822 AND DET 17, SHT D-3.
14. 20-FT WIDE VEHICULAR GATE, REF TO C.O.H. SPEC 02822 AND DET 17, SHT D-3.
15. 12-FT X 18-FT PRECAST CONCRETE CONTROL BUILDING, REF TO SPEC 13455 & SHT D-26 & D-27.
16. CATWALK, LANDING & HANDRAIL, REF TO DET SHT D-24 & D-25.
17. 5-FT WIDE STAIRCASE, REF TO DET SHT D-29.
18. 378 SY OF 24-FT WIDE, 7-INCH THICK CONCRETE PAVEMENT WITH 6-INCH THICK 6% LIME STABILIZED SUBGRADE, COH SPEC. 02336 REF TO SHT D-14.
19. 21 LF 30-INCH DIA. SAN. SEWER PER C.O.H. SPEC 02531.
20. CONNECT TO EX. 16-INCH DIA. FORCE MAIN.

NOTES:

1. CONTRACTOR TO REMOVE EXISTING PAVEMENT, LEVEL UPGRADE, FILL WITH TOP SOIL AND SOD WITH GRASS, ENTIRE AREA DISTURBED DURING CONSTRUCTION.
2. EXISTING UTILITY LOCATIONS WERE DEVELOPED FROM BEST INFORMATION AVAILABLE. CONTRACTOR IS TO FIELD VERIFY EXISTING UTILITY LOCATIONS PRIOR TO EXCAVATION. ALL SHOP DRAWINGS USE TO HAVE FIELD VERIFIED FACILITY, STRUCTURAL, AND UTILITY LOCATION INDICATED.
3. DIMENSIONS NOTED ARE RELATIVE TO THE PUMP SIZE AND MANUFACTURER SELECTED. CONTRACTOR SHALL CONFIRM.
4. REFER TO ENVIRONMENTAL SITE ASSESSMENT REPORT FOR APPROXIMATE LOCATION AND SPECIAL HANDLING OR DISPOSAL OF PPCA.
5. ALL ELECTRICAL AND MECHANICAL EQUIPMENT MUST BE ELEVATED AT LEAST 3-FOOT ABOVE THE 500-YEAR FLOODPLAIN.

SUMMARY		
POND CUT VOLUME	7,444	FT^3
OVERALL OCCUPIED VOLUME TO 500-YEAR FLOOD STORM ELEVATION	680	FT^3
NET CUT VOLUME BELOW THE 500-YEAR FLOOD STORM ELEVATION	6,764	FT^3

N

0' 5' 10' 20'

HORIZ. 1"=10'

NO.	DATE	REVISION	APP.

NOTICE:
FOR YOUR SAFETY, YOU ARE REQUIRED BY TEXAS LAW TO CALL 811 AT LEAST 48 HOURS BEFORE YOU DIG SO THAT UNDERGROUND LINES CAN BE MARKED. THIS SIGNATURE DOES NOT FULFILL YOUR OBLIGATION TO CALL 811

VERIFICATION OF PRIVATE UTILITY LINES

Mike Brower 03/25/26
Date

CenterPoint Energy natural gas utilities shown. (Gas service lines are not shown). This signature not be used for conflict verification.

Signature valid for six months.

Mike Brower 03/25/26
Date

CenterPoint Energy/UNDERGROUND Electrical Facilities Verification ONLY. (This signature verifies existing underground facilities – not to be used for conflict verification)

Signature valid for six months.

Elvina Allison 02/18/2026
Chris Primrose 3/25/26
Date

Approved for AT&T underground conduit facilities only.
Signature valid for one year.

ARCADIS
Infrastructure · Water · Environment · Buildings
1330 Post Oak Blvd, Suite 2250
Houston, TX 77056
Tel: 713-953-4800
Fax: 713-977-4620
www.arcadis.com
Texas Registered Engineering Firm F-533

SURVEYED BY: AMANI ENGR.
FB NO. P-6335

STATE OF TEXAS
DAVID F. RIDGWAY
105134
LICENSED
PROFESSIONAL ENGINEER
01/16/2026

CITY OF HOUSTON
HOUSTON PUBLIC WORKS

LIFT STATION REHABILITATION & RECONSTRUCTION CONSENT DECREE

RED GULLY LIFT STATION SITE PLAN

C-24

WBS NUMBER	FOR CITY OF HOUSTON USE ONLY
R-000267-0175-4	
DRAWING SCALE	
AS NOTED	
CITY OF HOUSTON PM	
NP NAWARAJ PANTA, P.E.	
SHEET NO. 119 OF 312	

FILE PATH: C:\Users\ampuero4886\DC\ACCDocs\Arcadis ACC US\AUS-30126616-Lift Station Rehab And Reconstruct CMAR\Project Files\10_WIP\40-Red Gully\10T-C-Civil\RG.C-23.dwg
PLOT STYLE: COH.ctb PLOTTED: 1/15/2026 10:17 AM

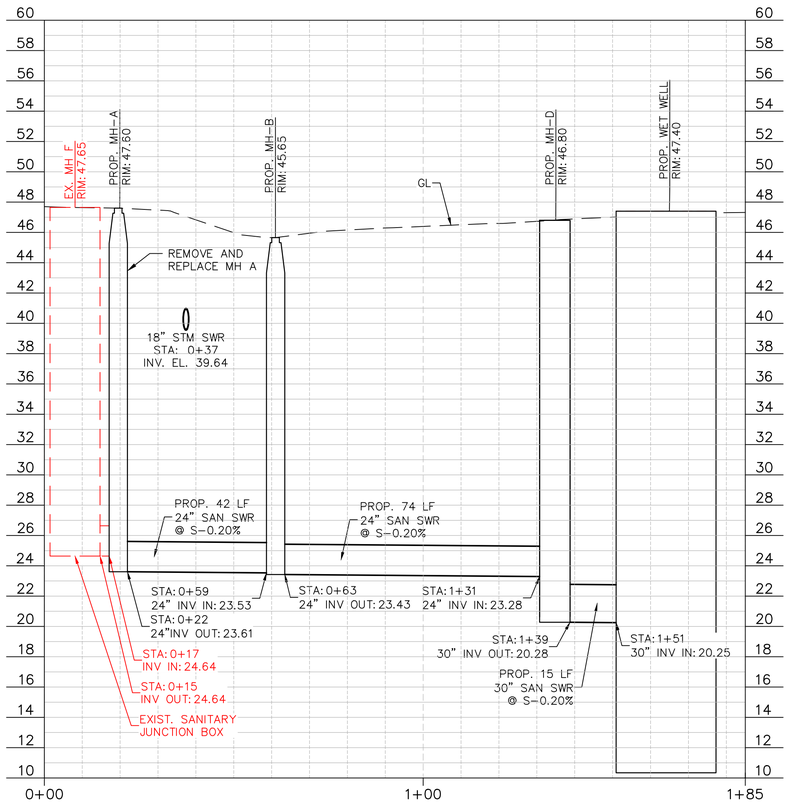

SANITARY SEWER PROFILE

PROFILE FROM EX MH A TO NEW WET WELL

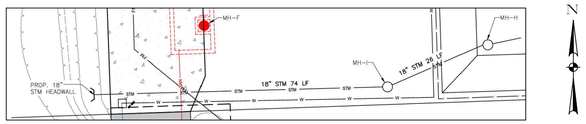

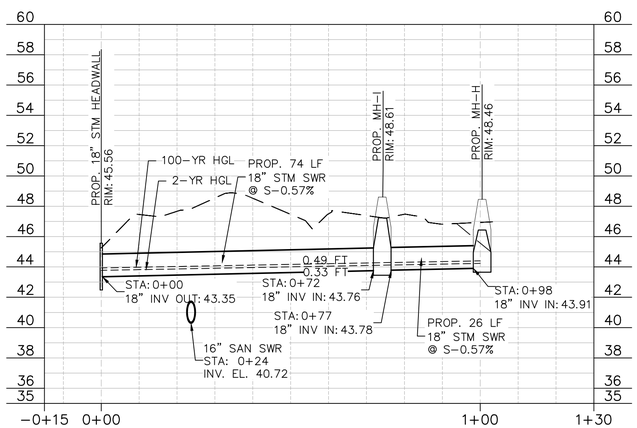

STORM SEWER PROFILE

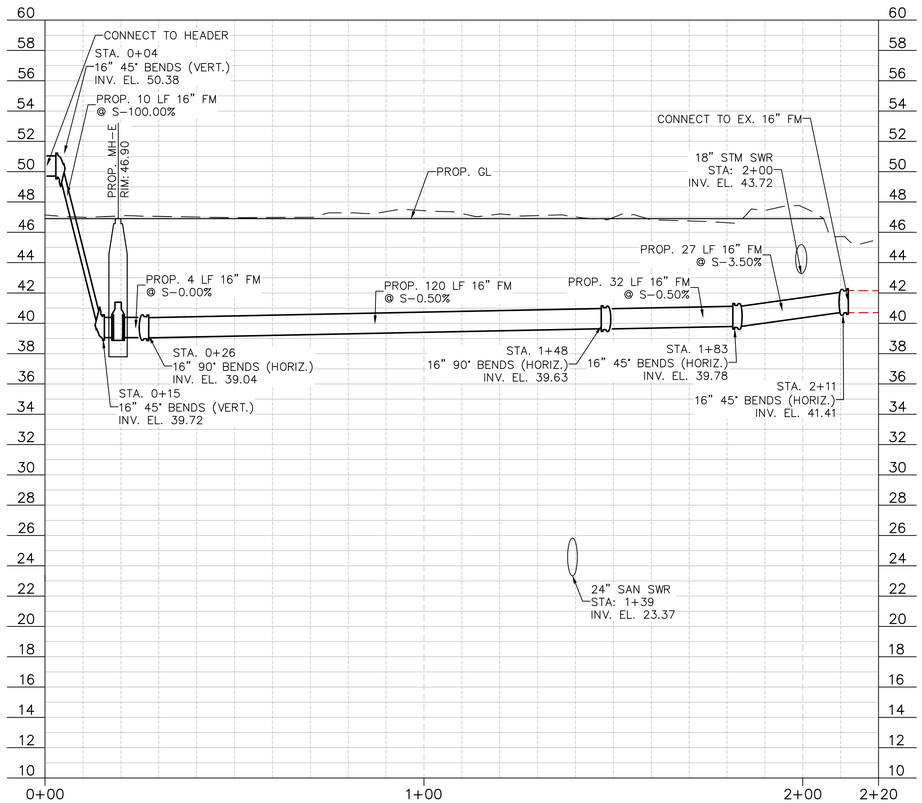

FORCE MAIN PROFILE

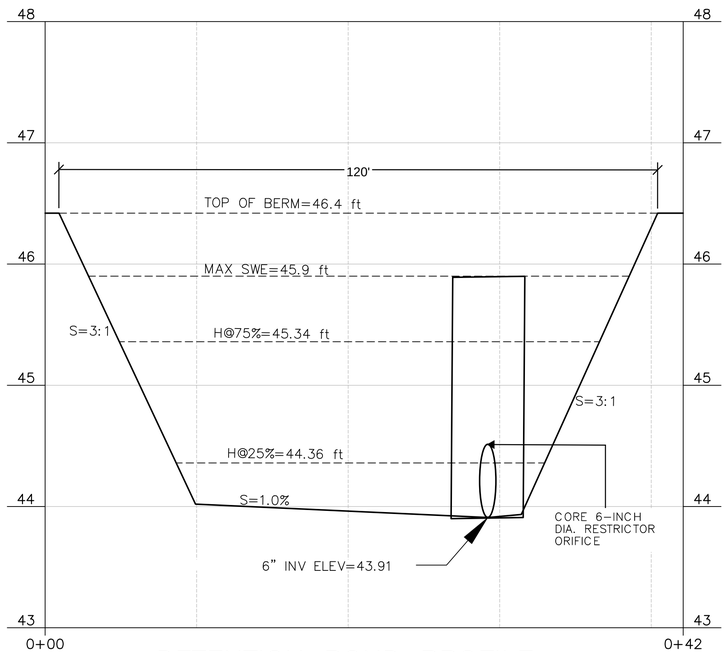

DETENTION POND PROFILE

0 10' 20' 40'
HORZ. 1"=20'

0 5' 10'
VERT. 1"=5'

NO.	DATE	REVISION	APP.

NOTICE:
FOR YOUR SAFETY, YOU ARE REQUIRED BY TEXAS LAW TO CALL 811 AT LEAST 48 HOURS BEFORE YOU DIG SO THAT UNDERGROUND LINES CAN BE MARKED. THIS SIGNATURE DOES NOT FULFILL YOUR OBLIGATION TO CALL 811

VERIFICATION OF PRIVATE UTILITY LINES

Mike Brower 02/17/26
Date

CenterPoint Energy natural gas utilities shown. (Gas service lines are not shown). This signature not be used for conflict verification.
Signature valid for six months.

Mike Brower 02/17/26
Date

CenterPoint Energy/UNDERGROUND Electrical Facilities Verification ONLY. (This signature verifies existing underground facilities – not to be used for conflict verification)
Signature valid for six months.

Elvina Allison 02/18/2026
Date

Approved for AT&T underground conduit facilities only.
Signature valid for one year.

ARCADIS
Infrastructure · Water · Environment · Buildings
1330 Post Oak Blvd, Suite 2250
Houston, TX 77056
Tel: 713-953-4800
Fax: 713-977-4620
www.arcadis.com
Texas Registered Engineering Firm F-533

SURVEYED BY: **AMANI ENGR.**
FB NO. P-6335

STATE OF TEXAS
DAVID F. RIDGWAY
105134
LICENSED
PROFESSIONAL ENGINEER
01/16/2026

CITY OF HOUSTON
HOUSTON PUBLIC WORKS

LIFT STATION REHABILITATION & RECONSTRUCTION
CONSENT DECREE

RED GULLY LIFT STATION
YARD PIPING
PROFILE

C-25

WBS NUMBER	FOR CITY OF HOUSTON USE ONLY
R-000267-0175-4	
DRAWING SCALE	
AS NOTED	
CITY OF HOUSTON PM	
NP NAWARAJ PANTA, P.E.	
SHEET NO. 120 OF 312	

FILE PATH: C:\Users\ampuero4886\DC\ACCDocs\Arcadis ACC US\AUS-30126616-Lift Station Rehab And Reconstruct CMAR\Project Files\10_WIP\40-Red Gully\10T-C-Civil\RG.C-24.dwg
PLOT STYLE: COH.ctb PLOTTED: 1/14/2026 4:01 PM

NOTE TO OWNER:

DETENTION POND TO DRAIN WITHIN 48 HOURS AFTER STORM EVENT. MAINTENANCE OF DETENTION POND IS THE OWNER RESPONSIBILITY.

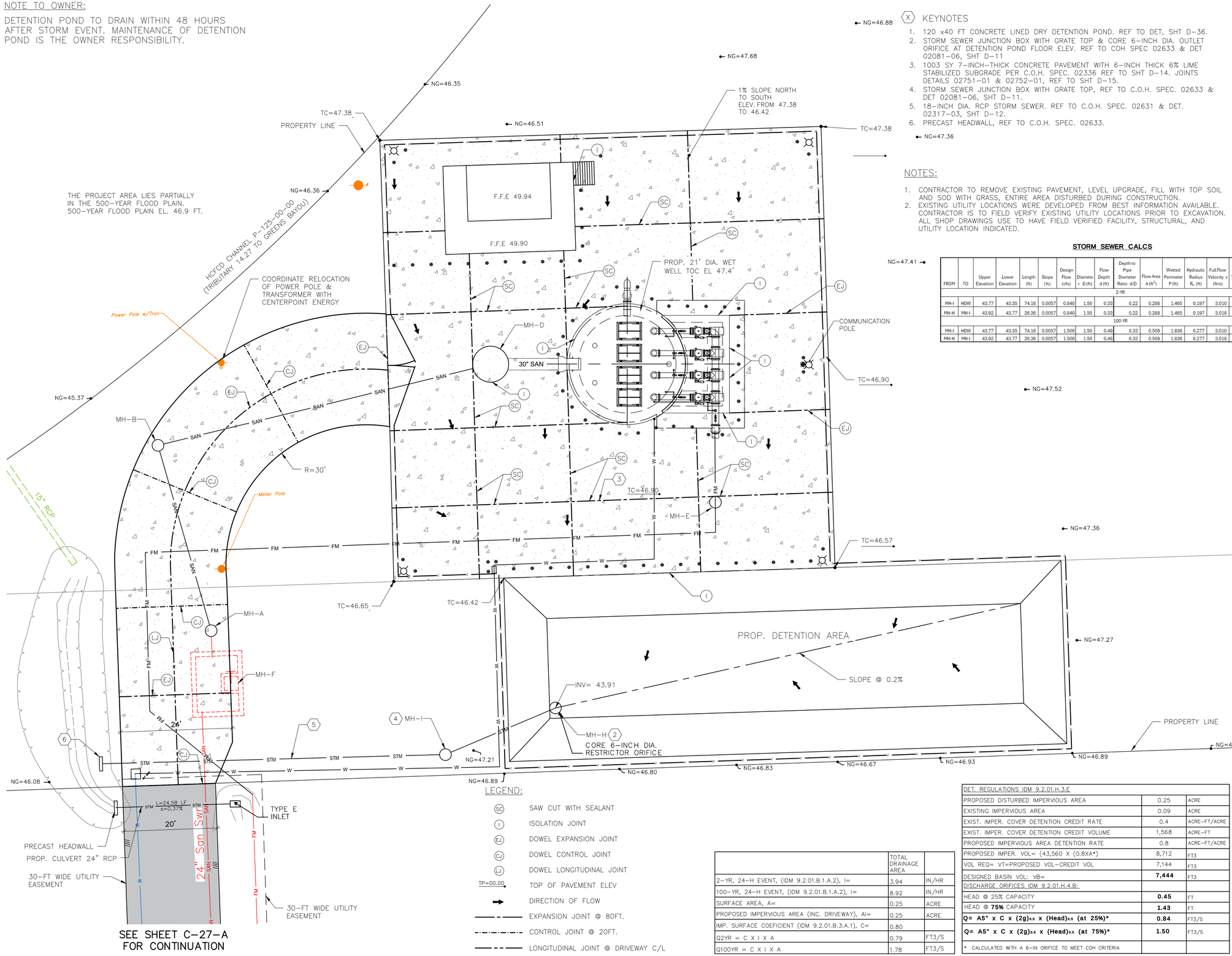

SEE SHEET C-27-A FOR CONTINUATION

KEYNOTES

1. 120 x40 FT CONCRETE LINED DRY DETENTION POND. REF TO DET, SHT D-36.
2. STORM SEWER JUNCTION BOX WITH GRATE TOP & CORE 6-INCH DIA. OUTLET ORIFICE AT DETENTION POND FLOOR ELEV. REF TO COH SPEC 02633 & DET 02081-06, SHT D-11
3. 1003 SY 7-INCH-THICK CONCRETE PAVEMENT WITH 6-INCH THICK 6% LIME STABILIZED SUBGRADE PER C.O.H. SPEC. 02336 REF TO SHT D-14. JOINTS DETAILS 02751-01 & 02752-01, REF TO SHT D-15.
4. STORM SEWER JUNCTION BOX WITH GRATE TOP, REF TO C.O.H. SPEC. 02633 & DET 02081-06, SHT D-11.
5. 18-INCH DIA. RCP STORM SEWER. REF TO C.O.H. SPEC. 02631 & DET. 02317-03, SHT D-12.
6. PRECAST HEADWALL, REF TO C.O.H. SPEC. 02633.

N

0' 5' 10' 20'

HORIZ. 1"=10'

NOTES:

1. CONTRACTOR TO REMOVE EXISTING PAVEMENT, LEVEL UPGRADE, FILL WITH TOP SOIL AND SOD WITH GRASS, ENTIRE AREA DISTURBED DURING CONSTRUCTION.
2. EXISTING UTILITY LOCATIONS WERE DEVELOPED FROM BEST INFORMATION AVAILABLE. CONTRACTOR IS TO FIELD VERIFY EXISTING UTILITY LOCATIONS PRIOR TO EXCAVATION. ALL SHOP DRAWINGS USE TO HAVE FIELD VERIFIED FACILITY, STRUCTURAL, AND UTILITY LOCATION INDICATED.

STORM SEWER CALCS

FROM	TO	Upper Elevation	Lower Elevation	Length (ft)	Slope (%)	Design Flow (cfs)	Diameter D (ft)	Flow Depth d (ft)	Depth to Pipe Diameter Ratio d/D	Flow Area A (ft²)	Wetted Perimeter P (ft)	Hydraulic Radius R_h (ft)	Full Flow Velocity v (ft/s)	Travel Time T_t (min)	Calculated Flow Rate Q_{calc} (cfs)	Observed/ Design Flow Rate Q_{des} (cfs)
2-YR																
MH-I	HDW	43.77	43.35	74.16	0.0057	0.840	1.50	0.33	0.22	0.288	1.465	0.197	3.010	0.41	0.87	0.84
MH-H	MH-I	43.92	43.77	26.36	0.0057	0.840	1.50	0.33	0.22	0.288	1.465	0.197	3.018	0.15	0.87	0.84
100-YR																
MH-I	HDW	43.77	43.35	74.16	0.0057	1.500	1.50	0.49	0.33	0.509	1.836	0.277	3.010	0.41	1.53	1.50
MH-H	MH-I	43.92	43.77	26.36	0.0057	1.500	1.50	0.49	0.33	0.509	1.836	0.277	3.018	0.15	1.53	1.50

LEGEND:

- (SC) SAW CUT WITH SEALANT
- (I) ISOLATION JOINT
- (EJ) DOWEL EXPANSION JOINT
- (CJ) DOWEL CONTROL JOINT
- (LJ) DOWEL LONGITUDINAL JOINT
- TP=00.00 TOP OF PAVEMENT ELEV
- DIRECTION OF FLOW
- EXPANSION JOINT @ 80FT.
- CONTROL JOINT @ 20FT.
- LONGITUDINAL JOINT @ DRIVEWAY C/L

	TOTAL DRAINAGE AREA	
2-YR, 24-H EVENT, (IDM 9.2.01.B.1.A.2), I=	3.94	IN/HR
100-YR, 24-H EVENT, (IDM 9.2.01.B.1.A.2), I=	8.92	IN/HR
SURFACE AREA, A=	0.25	ACRE
PROPOSED IMPERVIOUS AREA (INC. DRIVEWAY), AI=	0.25	ACRE
IMP. SURFACE COEFICIENT (IDM 9.2.01.B.3.A.1), C=	0.80	
Q2YR = C X I X A	0.79	FT3/S
Q100YR = C X I X A	1.78	FT3/S

DET. REGULATIONS IDM 9.2.01.H.3.E		
PROPOSED DISTURBED IMPERVIOUS AREA	0.25	ACRE
EXISTING IMPERVIOUS AREA	0.09	ACRE
EXIST. IMPER. COVER DETENTION CREDIT RATE	0.4	ACRE-FT/ACRE
EXIST. IMPER. COVER DETENTION CREDIT VOLUME	1,568	ACRE-FT
PROPOSED IMPERVIOUS AREA DETENTION RATE	0.8	ACRE-FT/ACRE
PROPOSED IMPER. VOL= (43,560 X (0.8XA*)	8,712	FT3
VOL REQ= VT=PROPOSED VOL-CREDIT VOL	7,144	FT3
DESIGNED BASIN VOL: VB=	**7,444**	FT3
DISCHARGE ORIFICES IDM 9.2.01.H.4.B:		
HEAD @ 25% CAPACITY	**0.45**	FT
HEAD @ **75%** CAPACITY	**1.43**	FT
Q= A5" x C x (2g)$^{0.5}$ x (Head)$^{0.5}$ (at 25%)*	**0.84**	FT3/S
Q= A5" x C x (2g)$^{0.5}$ x (Head)$^{0.5}$ (at 75%)*	**1.50**	FT3/S
* CALCULATED WITH A 6-IN ORIFICE TO MEET COH CRITERIA		

NO.	DATE	REVISION	APP.

NOTICE:

FOR YOUR SAFETY, YOU ARE REQUIRED BY TEXAS LAW TO CALL 811 AT LEAST 48 HOURS BEFORE YOU DIG SO THAT UNDERGROUND LINES CAN BE MARKED. THIS SIGNATURE DOES NOT FULFILL YOUR OBLIGATION TO CALL 811

VERIFICATION OF PRIVATE UTILITY LINES

Mike Brower 03/25/26
Date

CenterPoint Energy natural gas utilities shown. (Gas service lines are not shown). This signature not be used for conflict verification.

Signature valid for six months.

Mike Brower 03/25/26
Date

CenterPoint Energy/UNDERGROUND Electrical Facilities Verification ONLY. (This signature verifies existing underground facilities – not to be used for conflict verification)

Signature valid for six months.

Chris Primrose 3/25/26
Date

Approved for AT&T underground conduit facilities only.
Signature valid for one year.

ARCADIS
Infrastructure · Water · Environment · Buildings
1330 Post Oak Blvd, Suite 2250
Houston, TX 77056
Tel: 713-953-4800
Fax: 713-977-4620
www.arcadis.com
Texas Registered Engineering Firm F-533

SURVEYED BY: **AMANI ENGR.**
FB NO. P-6335

STATE OF TEXAS
DAVID F. RIDGWAY
105134
LICENSED PROFESSIONAL ENGINEER
03/12/2026

CITY OF HOUSTON

HOUSTON PUBLIC WORKS

LIFT STATION REHABILITATION & RECONSTRUCTION CONSENT DECREE

RED GULLY LIFT STATION CONCRETE PAVEMENT & DRAINAGE PLAN C-26

WBS NUMBER	FOR CITY OF HOUSTON USE ONLY
R-000267-0175-4	
DRAWING SCALE	
AS NOTED	
CITY OF HOUSTON PM	
NP NAWARAJ PANTA, P.E.	
SHEET NO. 121 OF 312	

FILE PATH: C:\Users\ampueroc4886\DC\ACCDocs\Arcadis ACC US\AUS-30126616-Lift Station Rehab And Reconstruct CMAR\Project Files\10_WIP\40-Red Gully\10T-C-Civil\RG.C-26.dwg
PLOT STYLE: Coh_ctb_2.ctb PLOTTED: 3/12/2026 10:29 AM

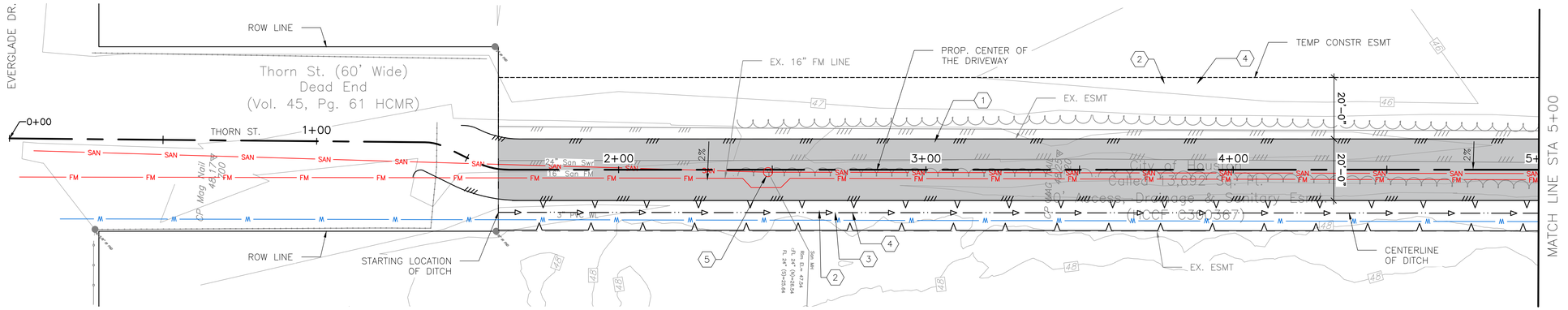

STA. 0+00 TO 5+00

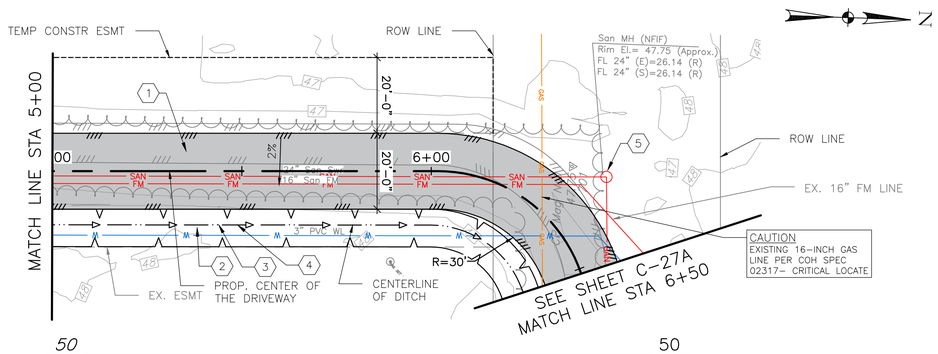

STA. 5+00 TO 6+50

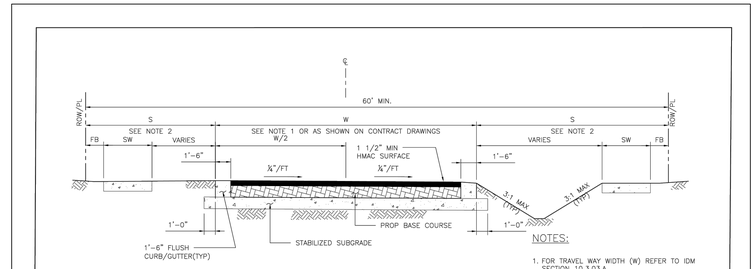

HMAC PAVEMENT – DITCH SECTION

(NOT APPLICABLE TO ETJ OF CITY OF HOUSTON)

NOTES:

1. FOR TRAVEL WAY WIDTH (W) REFER TO IDM SECTION 10.3.03.A.
2. REFER TO CONTRACT DRAWINGS FOR "S" DIMENSION (S), SIDEWALK (SW), FRONTAGE BUFFER (FB), AND SAFETY BUFFER (SB) WIDTHS.
3. BASE COURSE SHALL BE:
   ALTERNATES:
   A) 6" (MIN) HOT MIX ASPHALTIC CONCRETE.
   B) 8" (MIN) CRUSHED CONCRETE.

HOT MIX ASPHALTIC CONCRETE PAVEMENT DETAIL

(SCALE: NOT TO SCALE)

MODIFIED STANDARD

EFF DATE:	DWG NO:

NOTES:

1. CONTRACTOR TO GRADE DITCH SIDE SLOPES 3:1 MAX.
2. THE DRIVEWAY IS TO BE USED SOLELY FOR FACILITY ACCESS.

0' 10' 20' 40'

HORIZONTAL SCALE: 1"=20'

0' 1' 2' 4'

VERTICAL SCALE: 1"=2'

NO.	DATE	REVISION	APP.

KEYNOTES

1. 2-INCH THICK ASPHALT PAVEMENT WITH 8-INCH THICK CRUSHED CONCRETE AND 6-INCH - 6% LIME STABILIZED SUBGRADE PER C.O.H. SPEC 02741 AND DET ON SHT C-26 & REF TO DET 02741-01, SHT D-16.
2. CLEAR AND GRUB AREA PER C.O.H. SPEC 02233.
3. EXCAVATION FOR DITCH PER C.O.H. SPEC 02315.
4. HYDROMULCH AREA, PER C.O.H. SPEC 02921.
5. ADJUST MANHOLE RIM PER C.O.H. SPEC 02555-5.

NOTICE:

FOR YOUR SAFETY, YOU ARE REQUIRED BY TEXAS LAW TO CALL 811 AT LEAST 48 HOURS BEFORE YOU DIG SO THAT UNDERGROUND LINES CAN BE MARKED. THIS SIGNATURE DOES NOT FULFILL YOUR OBLIGATION TO CALL 811

VERIFICATION OF PRIVATE UTILITY LINES

Mike Brower — 03/25/26
Date

CenterPoint Energy natural gas utilities shown. (Gas service lines are not shown). This signature not be used for conflict verification.

Signature valid for six months.

Mike Brower — 03/25/26
Date

CenterPoint Energy/UNDERGROUND Electrical Facilities Verification ONLY. (This signature verifies existing underground facilities – not to be used for conflict verification)

Signature valid for six months.

Chris Primrose — 3/25/26
Date

Approved for AT&T underground conduit facilities only. Signature valid for one year.

ARCADIS
Infrastructure · Water · Environment · Buildings
1330 Post Oak Blvd, Suite 2250
Houston, TX 77056
Tel: 713-953-4800
Fax: 713-977-4620
www.arcadis.com
Texas Registered Engineering Firm F-533

SURVEYED BY: AMANI ENGR.

FB NO. P-6335

STATE OF TEXAS
DAVID F. RIDGWAY
105134
LICENSED PROFESSIONAL ENGINEER
03/12/2026

CITY OF HOUSTON

HOUSTON PUBLIC WORKS

LIFT STATION REHABILITATION & RECONSTRUCTION CONSENT DECREE

RED GULLY LIFT STATION ACCESS DRIVEWAY PLAN AND PROFILE

C-27

WBS NUMBER	FOR CITY OF HOUSTON USE ONLY
R-000267-0175-4	
DRAWING SCALE	
AS NOTED	
CITY OF HOUSTON PM	
NP NAWARAJ PANTA, P.E.	
SHEET NO. 122 OF 312	

FILE PATH: C:\Users\ampueroc4886\DC\ACCDocs\Arcadis ACC US\AUS-30126616-Lift Station Rehab And Reconstruct CMAR\Project Files\10_WIP\40-Red Gully\10T-C-Civil\RG. C-27_2.dwg
PLOT STYLE: COH.ctb PLOTTED: 3/12/2026 9:47 AM

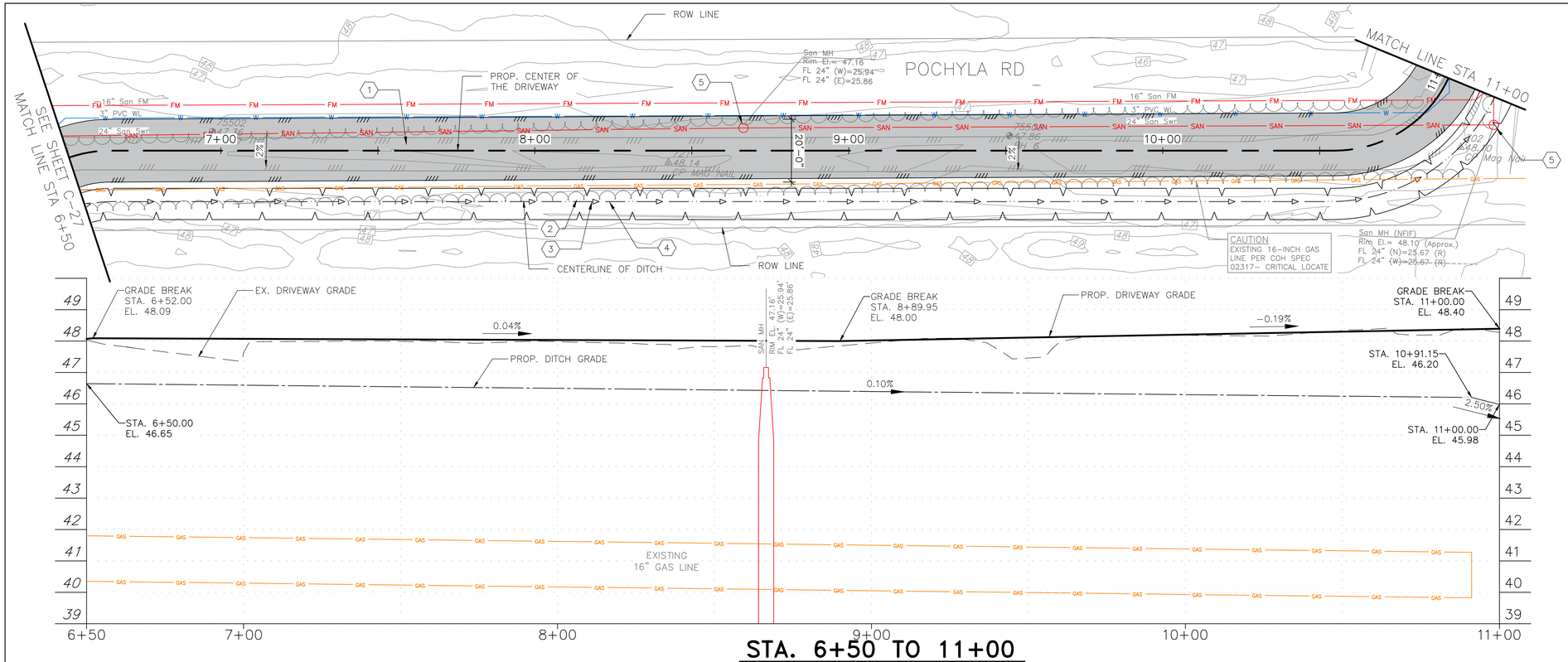

STA. 6+50 TO 11+00

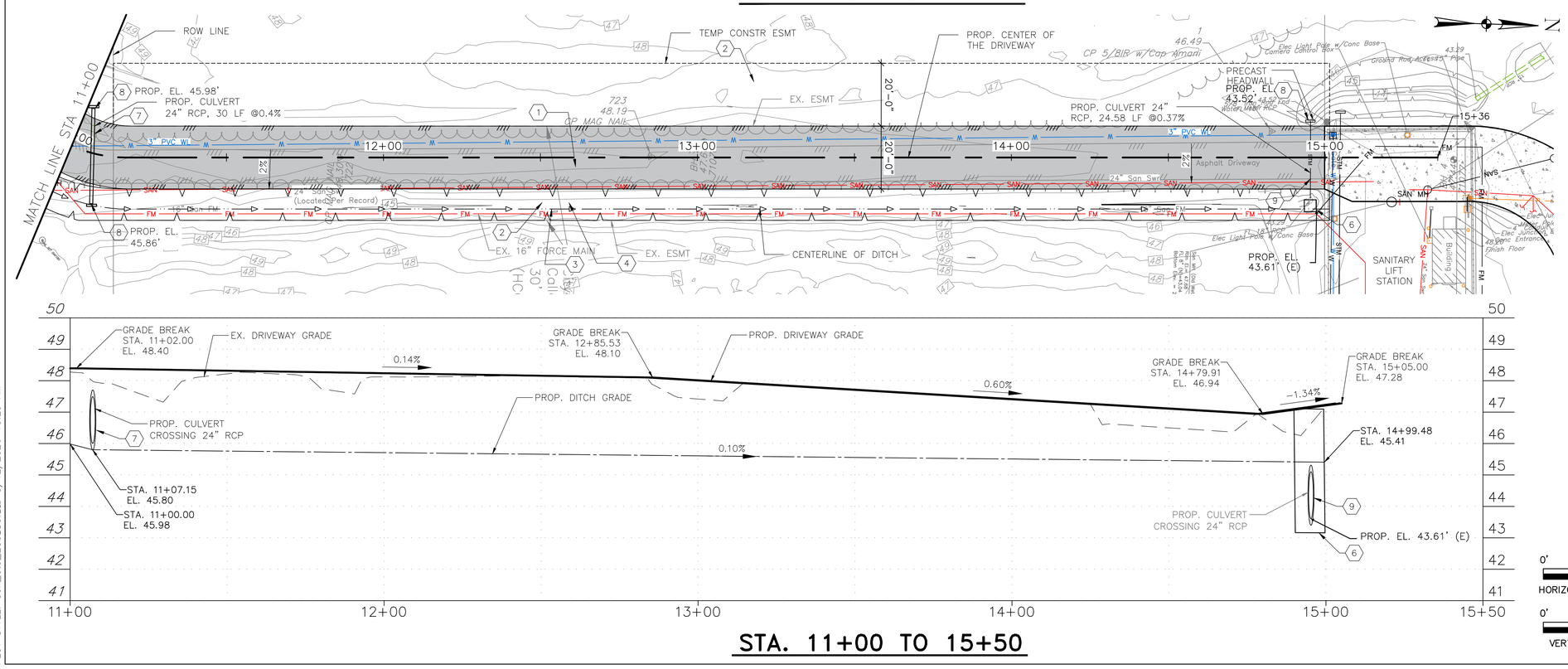

STA. 11+00 TO 15+50

HORIZONTAL SCALE: 1"=20'

VERTICAL SCALE: 1"=2'

NO.	DATE	REVISION	APP.

KEYNOTES

1. 2-INCH THICK ASPHALT PAVEMENT WITH 8-INCH THICK CRUSHED CONCRETE AND 6-INCH - 6% LIME STABILIZED SUBGRADE PER C.O.H. SPEC 02741 AND DET ON SHT C-26 & REF TO DET 02741-01, SHT D-16.
2. CLEAR AND GRUB AREA PER C.O.H. SPEC 02233.
3. EXCAVATION FOR DITCH PER C.O.H. SPEC 02315.
4. HYDROMULCH AREA, PER C.O.H. SPEC 02921.
5. ADJUST MANHOLE RIM PER C.O.H. SPEC 02555-5.
6. TYPE E STORM SEWER INLET AND STORM WATER JUNCTION BOX, REF TO C.O.H. SPEC 02633 AND DET 02632, SHT D-11.
7. REMOVE EX. 18-INCH RCP & REPLACE WITH 24-INCH RCP CULVERT PER C.O.H. SPEC 02631 & DET. 02317-02 & 03, SHT D-12.
8. PRECAST HEADWALL, REF TO COH SPEC. 02633
9. 24-INCH DIA. RCP CULVERT. REF TO C.O.H. SPEC. 02631 & DET. 02317-03, SHT D-12

NOTES:

1. CONTRACTOR TO GRADE DITCH SIDE SLOPES 3:1 MAX.
2. THE DRIVEWAY IS TO BE USED SOLELY FOR FACILITY ACCESS.

NOTICE:
FOR YOUR SAFETY, YOU ARE REQUIRED BY TEXAS LAW TO CALL 811 AT LEAST 48 HOURS BEFORE YOU DIG SO THAT UNDERGROUND LINES CAN BE MARKED. THIS SIGNATURE DOES NOT FULFILL YOUR OBLIGATION TO CALL 811

VERIFICATION OF PRIVATE UTILITY LINES

Mike Brower — 03/25/26 (Date)

CenterPoint Energy natural gas utilities shown. (Gas service lines are not shown). This signature not be used for conflict verification.

Signature valid for six months.

Mike Brower — 03/25/26 (Date)

CenterPoint Energy/UNDERGROUND Electrical Facilities Verification ONLY. (This signature verifies existing underground facilities – not to be used for conflict verification)

Signature valid for six months.

Chris Primrose — 3/25/26 (Date)

Approved for AT&T underground conduit facilities only. Signature valid for one year.

ARCADIS
Infrastructure · Water · Environment · Buildings
1330 Post Oak Blvd, Suite 2250
Houston, TX 77056
Tel: 713-953-4800
Fax: 713-977-4620
www.arcadis.com
Texas Registered Engineering Firm F-533

SURVEYED BY: AMANI ENGR.
FB NO. P-6335

STATE OF TEXAS — DAVID F. RIDGWAY — 105134 — LICENSED PROFESSIONAL ENGINEER — 03/12/2026

CITY OF HOUSTON
HOUSTON PUBLIC WORKS

LIFT STATION REHABILITATION & RECONSTRUCTION CONSENT DECREE

RED GULLY LIFT STATION ACCESS DRIVEWAY PLAN AND PROFILE

C-27-A

WBS NUMBER	FOR CITY OF HOUSTON USE ONLY
R-000267-0175-4	
DRAWING SCALE	
AS NOTED	
CITY OF HOUSTON PM	
NP NAWARAJ PANTA, P.E.	
SHEET NO. 123 OF 312	

FILE PATH: C:\Users\ampuero4886\DC\ACCDocs\Arcadis ACC US\AUS-30126616-Lift Station Rehab And Reconstruct CMAR\Project Files\10_WIP\40-Red Gully\10T-C-Civil\RG.C-26.dwg
PLOT STYLE: Coh_ctb_23 BY: Eteb 3/12/2026 10:29 AM

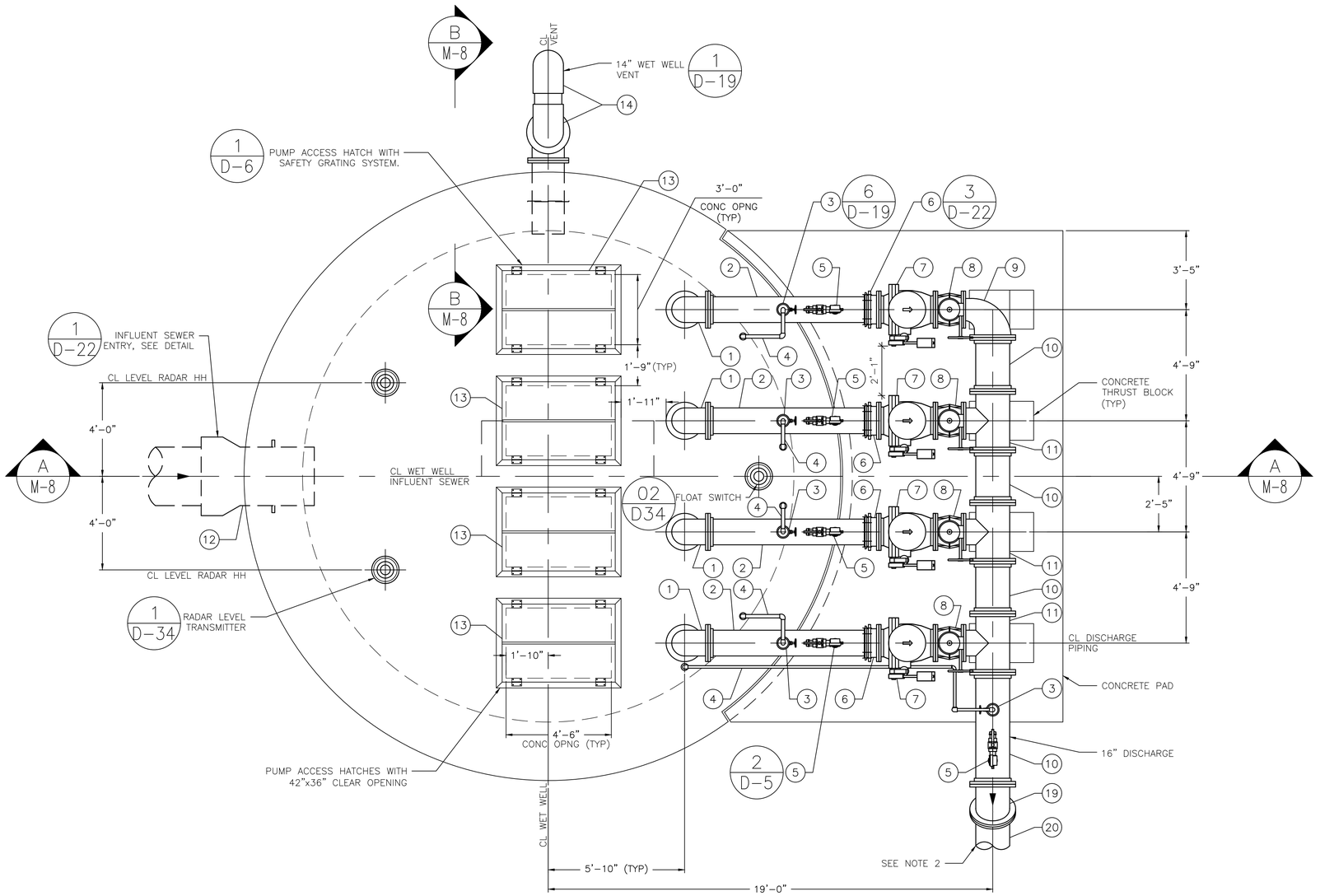

PLAN VIEW @ GRADE

0 2' 4' 6'

SCALE: 3/8"=1'-0"

N

NO.	DATE	REVISION	APP.

NOTES:

1. ALL ITEMS LISTED HEREIN SHALL CONFORM TO PROJECT SPECIFICATIONS.
2. SEE SHEET C-23 FOR CONTINUATION OF FORCE MAIN.

PIPE FITTING SCHEDULE

ITEM NO.	QUANTITY	SIZE	ITEM
1	4	12"	D.I. 90° ELL, FLG X FLG
2	4	12"	D.I. PIPE, FLG X PE
3	**4/1**	**3"/3"**	**AIR & VACUUM VALVE / COMBINED AIR VALVE**
4	5	1"	SS AIR RELEASE DRAIN LINE PIPE, PE X PE
5	5	2 1/2"	PRESSURE GAUGE
6	8	12"	RESTRAINED FLANGED COUPLING ADAPTER
7	4	12"	SWING CHECK VALVE, FLG X FLG
8	4	12"	PLUG VALVE, FLG X FLG
9	1	16" X 12"	D.I. REDUCING ELL
10	4	16"	D.I. PIPE, FLG X FLG
11	3	16" X 12"	D.I REDUCING TEE, FLG
12	1	30"	WALL PIPE W/WATERSTOP COLLAR PE X BELL, D.I.
13	4	4'-6" X 3'-0"	DOUBLE LEAF WATERPROOF ACCESS HATCH COVER WITH POWDER COATED ALUMINIUM PROTECTIVE GRATING PANEL.
14	2	14"	316 SS OR FRP 90° ELL, W/ P. ON WELDED
15	1	14"	316 SS OR FRP PIPE, FLG X P. ON / WELDED
16	1	14"	316 SS OR FRP 90° ELL, FLG X FLG
17	1	14"	WALL PIPE W/WATERSTOP COLLAR PE X FLG, D.I.
18	1	14"	SS BIRD SCREEN
19	1	16"	D.I. 45° ELL, FLG X FLG
20	1	16"	D.I. PIPE, FLG X MJ

AIR AND SURGE VALVE SCHEDULE

ITEM NO.	TYPE OF AIR VALVE	QTY	AIR VALVE INLET SIZE (IN)	ORIFICE SIZE (IN)
PUMP DISCHARGE	**AIR & VACUUM VALVE**	4	3	-
FORCE MAIN	COMBINED AIR VALVE	1	3	1/8

ARCADIS
Infrastructure · Water · Environment · Buildings
1330 Post Oak Blvd, Suite 2250
Houston, TX 77056
Tel: 713-953-4800
Fax: 713-977-4620
www.arcadis.com
Texas Registered Engineering Firm F-533

SURVEYED BY: **AMANI ENGR.**
FB NO. P-6335

STATE OF TEXAS
DAVID F. RIDGWAY
105134
LICENSED
PROFESSIONAL ENGINEER
11/21/2025

CITY OF HOUSTON

HOUSTON PUBLIC WORKS

LIFT STATION REHABILITATION & RECONSTRUCTION CONSENT DECREE

RED GULLY LIFT STATION WET WELL PLAN

M-7

WBS NUMBER	FOR CITY OF HOUSTON USE ONLY
R-000267-0175-4	
DRAWING SCALE	
AS NOTED	
CITY OF HOUSTON PM	
NP NAWARAJ PANTA, P.E.	
SHEET NO. 124 OF 312	

FILE PATH: C:\Users\guldagak0287\DC\ACCDocs\Arcadis ACC US\AUS-30126616-Lift Station Rehab And Reconstruct CMAR\Project Files\10_WIP\40-Red Gully\10T-M-Mechanical\M-7.dwg
PLOT STYLE: COH.ctb PLOTTED: 11/21/2025 8:10 PM

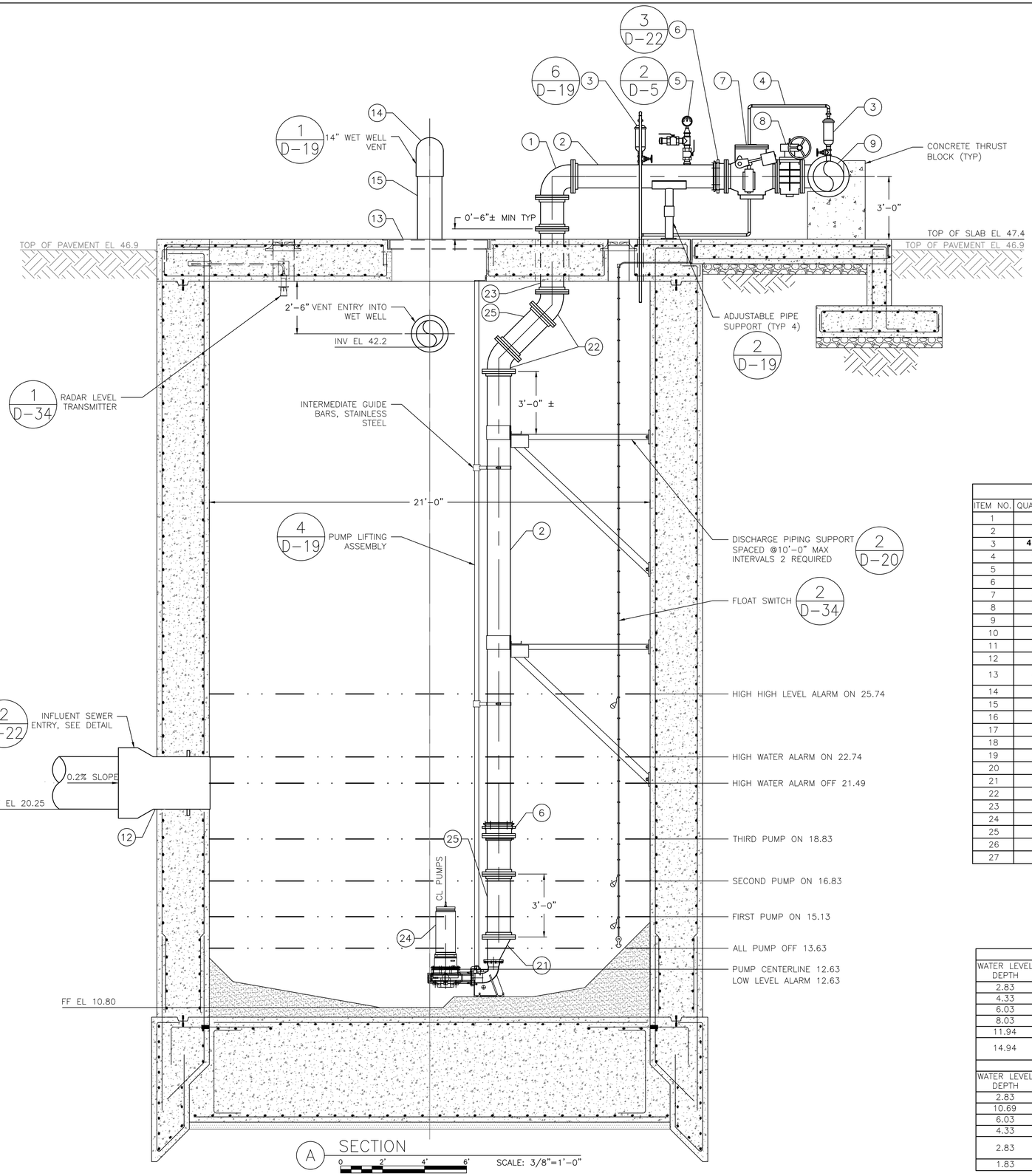

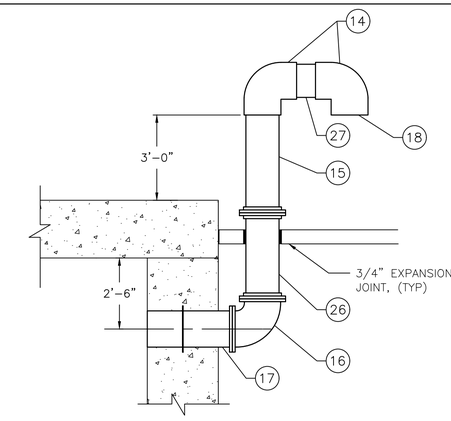

NO.	DATE	REVISION	APP.

NOTES:

1. ALL ITEMS LISTED HEREIN SHALL CONFORM TO PROJECT SPECIFICATIONS.
2. FOR PIPE SCHEDULE, SEE PIPE FITTING SCHEDULE THIS SHEET.
3. PUMP MANUFACTURER TO PROVIDE ENGINEERED SHOP DRAWINGS FOR WATERPROOF ACCESS HATCH SEALED BY A LICENSED ENGINEER FOR DEFERRED SUBMITTAL TO CODE ENFORCEMENT FROM CITY APPROVED FABRICATOR.SEE SPECIFICATION SECTION 11311 CLAUSE 2.03 (A) FOR DETAIL.
4. CONTRACTOR TO PROVIDE SHOP DRAWINGS FOR EIGHT VANE ANTI-VORTEX DEVICE AT PUMP SUCTION.

PIPE FITTING SCHEDULE

ITEM NO.	QUANTITY	SIZE	ITEM
1	4	12"	D.I. 90° ELL, FLG X FLG
2	4	12"	D.I. PIPE, FLG X PE
3	**4/1**	**3"/3"**	AIR & VACUUM VALVE **/ COMBINED AIR VALVE**
4	5	1"	SS AIR RELEASE DRAIN LINE PIPE, PE X PE
5	4	2 1/2"	PRESSURE GAUGE
6	8	12"	RESTRAINED FLANGED COUPLING ADAPTER
7	4	12"	SWING CHECK VALVE, FLG X FLG
8	4	12"	PLUG VALVE, FLG X FLG
9	1	16" X 12"	D.I. REDUCING ELL
10	4	16"	D.I. PIPE, FLG X FLG
11	3	16" X 12"	D.I. REDUCING TEE, FLG
12	1	30"	WALL PIPE W/WATERSTOP COLLAR PE X BELL, D.I.
13	4	4'-6" X 3'-0"	DOUBLE LEAF WATERPROOF ACCESS HATCH COVER WITH POWDER COATED ALUMINIUM PROTECTIVE GRATING PANEL.
14	2	14"	316 SS OR FRP 90° ELL, W/ P. ON WELDED
15	1	14"	316 SS OR FRP PIPE, FLG X P. ON / WELDED
16	1	14"	316 SS OR FRP 90° ELL, FLG X FLG
17	1	14"	WALL PIPE W/WATERSTOP COLLAR PE X FLG, D.I.
18	1	14"	SS BIRD SCREEN
19	1	16"	D.I. 45° ELL, FLG X FLG
20	1	16"	D.I. PIPE, FLG X MJ
21	4	12" X 6"	D.I. ECC. REDUCER, FLG X FLG
22	8	12"	D.I. 45° ELL, FLG X FLG
23	4	12"	WALL PIPE, FLG X FLG
24	4	–	SUBMERSIBLE PUMP
25	8	12"	D.I PIPE, FLG X FLG
26	1	14"	316 SS OR FRP OR D.I. PIPE, FLG X FLG /WELD/P. ON
27	1	14"	316 SS OR FRP PIPE, P. ON/WELDED X P. ON/WELDED

STATION OPERATION TABLES

RISING LEVEL CYCLE			
WATER LEVEL DEPTH	WATER LEVEL ELEVATION	ACTION	PUMP(S) IN OPERATION
2.83	13.63	PUMPS OFF LEVEL – NO ACTION	ALL PUMPS ARE OFF
4.33	15.13	LEAD PUMP TURNS ON	LEAD PUMP ON
6.03	16.83	SECOND PUMP TURNS ON	LEAD & SECOND PUMPS ON
8.03	18.83	THIRD PUMP TURNS ON	LEAD, SECOND & THIRD PUMPS ON
11.94	22.74	HIGH WATER ALARM ON	HIGH WATER ALARM SOUND
14.94	25.74	HIGH HIGH LEVEL ALARM (FLOAT ON LEVEL)	ALL DUTY PUMPS ON (FLOATS)
FALLING LEVEL CYCLE			
WATER LEVEL DEPTH	WATER LEVEL ELEVATION	ACTION	PUMP(S) IN OPERATION
2.83	13.63	FLOAT OFF LEVEL	ALL PUMPS OFF (FLOATS)
10.69	21.49	HIGH WATER LEVEL ALARM OFF	LEAD, SECOND & THIRD PUMPS ON
6.03	16.83	LEAD PUMP TURNS OFF	SECOND & THIRD PUMPS ON
4.33	15.13	SECOND PUMP TURNS OFF	THIRD PUMPS ON
2.83	13.63	THIRD PUMP TURNS OFF	ALL PUMPS STOPPED – STANDBY PUMP SWITCHES TO LEAD PUMP
1.83	12.63	LOW LEVEL ALARM	–

ARCADIS
Infrastructure · Water · Environment · Buildings
1330 Post Oak Blvd, Suite 2250
Houston, TX 77056
Tel: 713-953-4800
Fax: 713-977-4620
www.arcadis.com
Texas Registered Engineering Firm F-533

SURVEYED BY: **AMANI ENGR.**
FB NO. P-6335

STATE OF TEXAS
DAVID F. RIDGWAY
105134
LICENSED
PROFESSIONAL ENGINEER
11/21/2025

CITY OF HOUSTON
HOUSTON PUBLIC WORKS

LIFT STATION REHABILITATION & RECONSTRUCTION CONSENT DECREE

RED GULLY LIFT STATION WET WELL SECTION

M-8

WBS NUMBER	FOR CITY OF HOUSTON USE ONLY
R-000267-0175-4	
DRAWING SCALE	
AS NOTED	
CITY OF HOUSTON PM	
NP NAWARAJ PANTA, P.E.	
SHEET NO. 125 OF 312	

FILE PATH: C:\Users\guldagok0287\DC\ACCDocs\Arcadis ACC US\AUS-30126616-Lift Station Rehab And Reconstruct CMAR\Project Files\10_WIP\40-Red Gully\10T-M-Mechanical\M-8.dwg
PLOT STYLE: COH.ctb PLOTTED: 11/21/2025 8:10 PM

RED GULLY LIFT STATION - 6.0 MGD FIRM CAPACITY
SYSTEM & PUMP CURVES

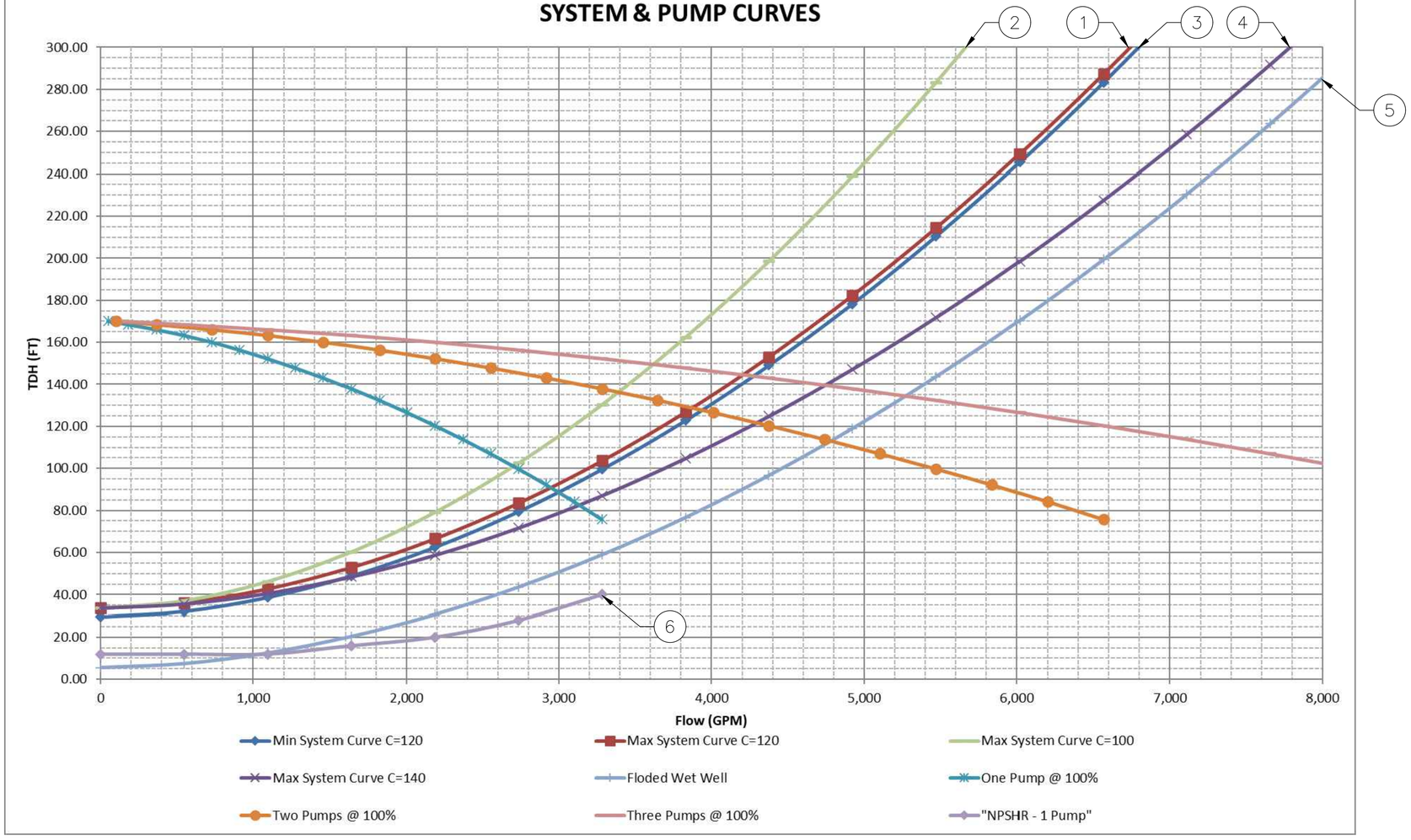

PUMP CURVE NOTES:

1. LOW NORMAL OPERATING LEVEL C=120 –DESIGN.
2. HIGH NORMAL OPERATING LEVEL C=100 – INFORMATION ONLY (TCEQ).
3. HIGH NORMAL OPERATING LEVEL C=120 – DESIGN
4. HIGH NORMAL OPERATING LEVEL C=140– INFORMATION ONLY
5. EMERGENCY FLOODED OPERATING LEVEL C=140 – MAXIMUM DISCHARGE
6. NET POSITIVE HEAD SUCTION REQUIRED (NPSHR) BASED ON NORMAL OPERATING WATER LEVEL

PUMP CHARACTERISTICS	PUMP NO. 1	PUMP NO. 2	PUMP NO. 3	PUMP NO. 4
MOTOR DATA NOMINAL SIZE (HP) MAX SPEED (RPM)	 121 1180	 121 1180	 121 1180	 121 1180
SOLIDS PASSAGE MIN. SPHERE (IN)	3 9/16	3 9/16	3 9/16	3 9/16
CAPACITY (GPM) DESIGN RUNOUT	 1,389 3,400	 1,389 3,400	 1,389 3,400	 1,389 3,400
DISCHARGE HEAD (FT.) DESIGN RUNOUT SHUT OFF	 145 70 170	 145 70 170	 145 70 170	 145 70 170
EFFICIENCY (%)	70.8	70.8	70.8	70.8
NPSHR (FT) DESIGN RUNOUT	 12.07 31.5	 12.07 31.5	 12.07 31.5	 12.07 31.5
PUMP CYCLE TIME (MIN.)	15	15	15	15
CUMULATIVE CAPACITY (GPM)	2,900	3,900	4,200	–
NPSHA (FT)	31.5	31.5	31.5	31.5

NO.	DATE	REVISION	APP.

ARCADIS
Infrastructure · Water · Environment · Buildings
1330 Post Oak Blvd, Suite 2250
Houston, TX 77056
Tel: 713-953-4800
Fax: 713-977-4620
www.arcadis.com
Texas Registered Engineering Firm F-533

SURVEYED BY: AMANI ENGR.
FB NO. P-6335

STATE OF TEXAS
DAVID F. RIDGWAY
105134
LICENSED
PROFESSIONAL ENGINEER
03/12/2026

CITY OF HOUSTON
HOUSTON PUBLIC WORKS

LIFT STATION REHABILITATION & RECONSTRUCTION
CONSENT DECREE

RED GULLY LIFT STATION
WET WELL
PUMP CURVE DATA

M-9

WBS NUMBER	FOR CITY OF HOUSTON USE ONLY
R-000267-0175-4	
DRAWING SCALE	
AS NOTED	
CITY OF HOUSTON PM	
NP NAWARAJ PANTA, P.E.	
SHEET NO. 126 OF 312	

FILE PATH: C:\Users\omessan\DC\ACCDocs\Arcadis ACC US\AUS-30126616-Lift Station Rehab And Reconstruct CMAR\Project Files\10_WIP\40-Red Gully\10T-M-Mechanical\M-9.dwg
PLOT STYLE: Coh_ctb_23B0B1Eb 3/20/2026 11:22 AM

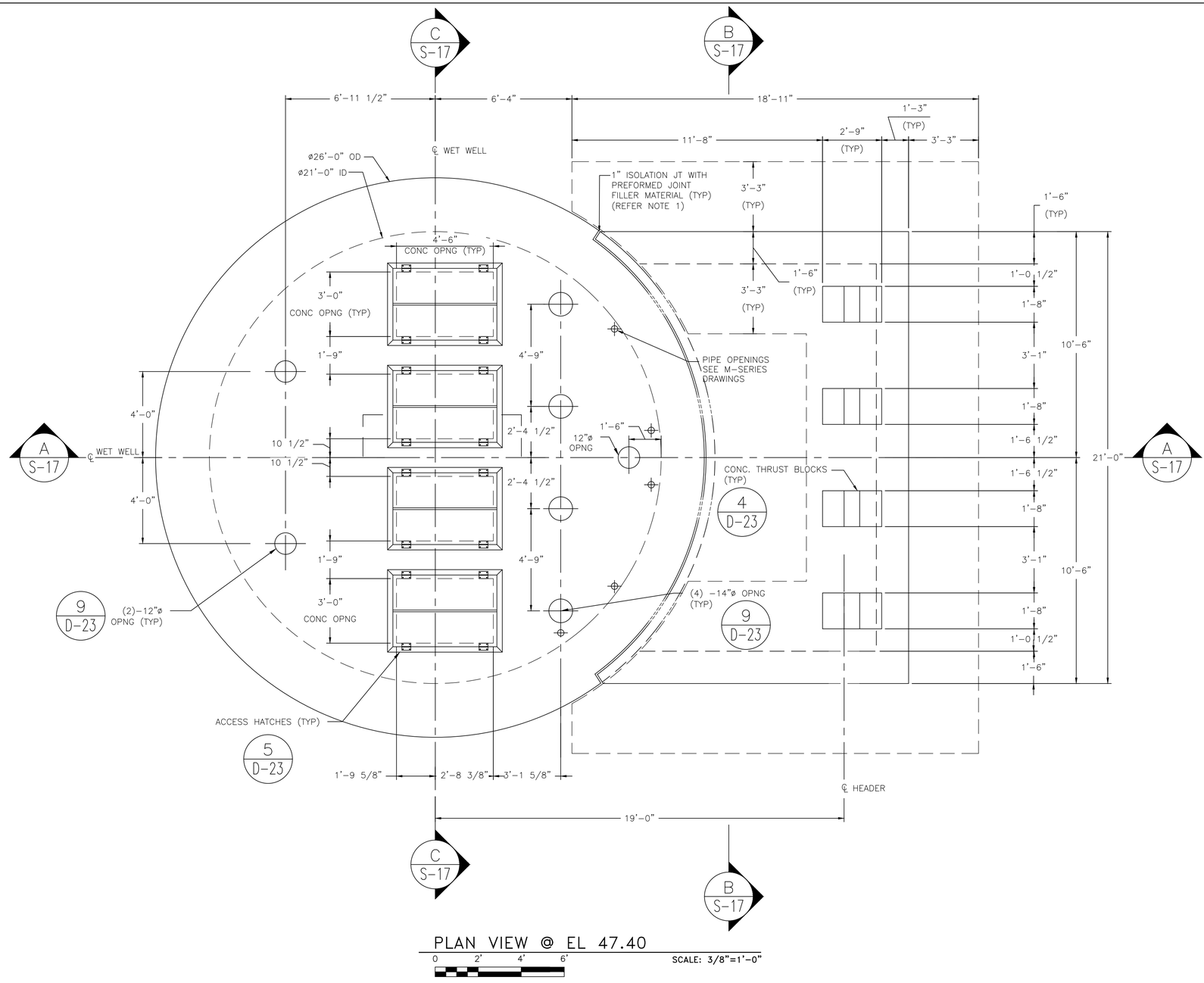

PLAN VIEW @ EL 47.40

0 2' 4' 6'

SCALE: 3/8"=1'-0"

NO.	DATE	REVISION	APP.

NOTES:

1. FOR ISOLATION JT REFER TO COH SPEC. 03151.

ARCADIS
Infrastructure · Water · Environment · Buildings
1330 Post Oak Blvd, Suite 2250
Houston, TX 77056
Tel: 713-953-4800
Fax: 713-977-4620
www.arcadis.com
Texas Registered Engineering Firm F-533

SURVEYED BY: AMANI ENGR.
FB NO. P-6335

STATE OF TEXAS
TANVIR HOSSAIN
121767
LICENSED PROFESSIONAL ENGINEER

CITY OF HOUSTON

HOUSTON PUBLIC WORKS

LIFT STATION REHABILITATION & RECONSTRUCTION CONSENT DECREE

RED GULLY LIFT STATION WET WELL PLAN

S-15

WBS NUMBER	FOR CITY OF HOUSTON USE ONLY
R-000267-0175-4	
DRAWING SCALE	
AS NOTED	
CITY OF HOUSTON PM	
NP NAWARAJ PANTA, P.E.	
SHEET NO. 127 OF 312	

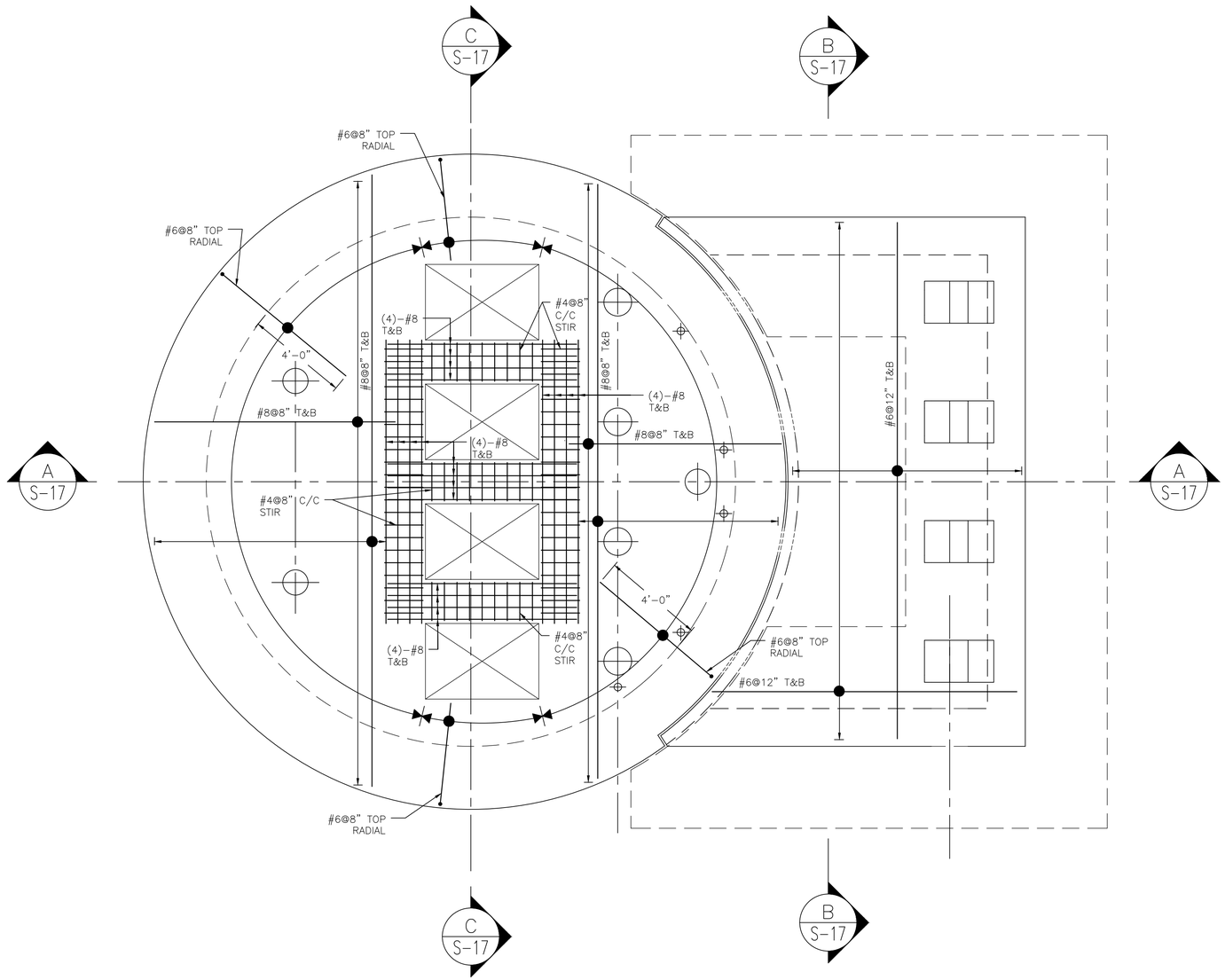

REINFORCEMENT PLAN @ EL 47.40

0 2' 4' 6'

SCALE: 3/8"=1'-0"

NO.	DATE	REVISION	APP.

ARCADIS
Infrastructure · Water · Environment · Buildings
1330 Post Oak Blvd, Suite 2250
Houston, TX 77056
Tel: 713-953-4800
Fax: 713-977-4620
www.arcadis.com
Texas Registered Engineering Firm F-533

SURVEYED BY: AMANI ENGR.
FB NO. P-6335

STATE OF TEXAS
TANVIR HOSSAIN
121767
LICENSED
PROFESSIONAL ENGINEER

CITY OF HOUSTON

HOUSTON PUBLIC WORKS

LIFT STATION REHABILITATION & RECONSTRUCTION
CONSENT DECREE

RED GULLY LIFT STATION
WET WELL
REINFORCEMENT PLAN

S-16

WBS NUMBER	FOR CITY OF HOUSTON USE ONLY
R-000267-0175-4	
DRAWING SCALE	
AS NOTED	
CITY OF HOUSTON PM	
NP NAWARAJ PANTA, P.E.	
SHEET NO. 128 OF 312	

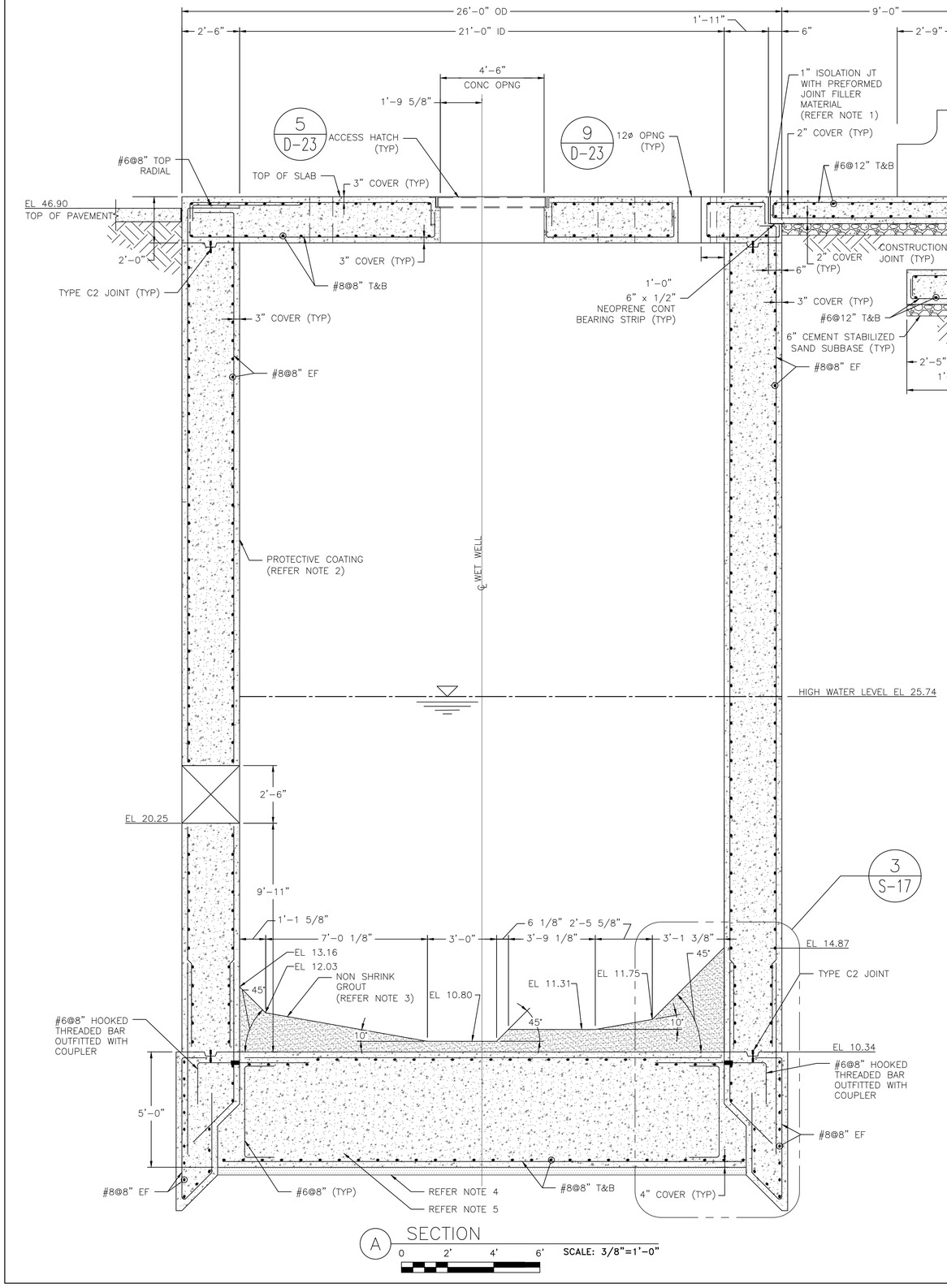

A SECTION

0 2' 4' 6' SCALE: 3/8"=1'-0"

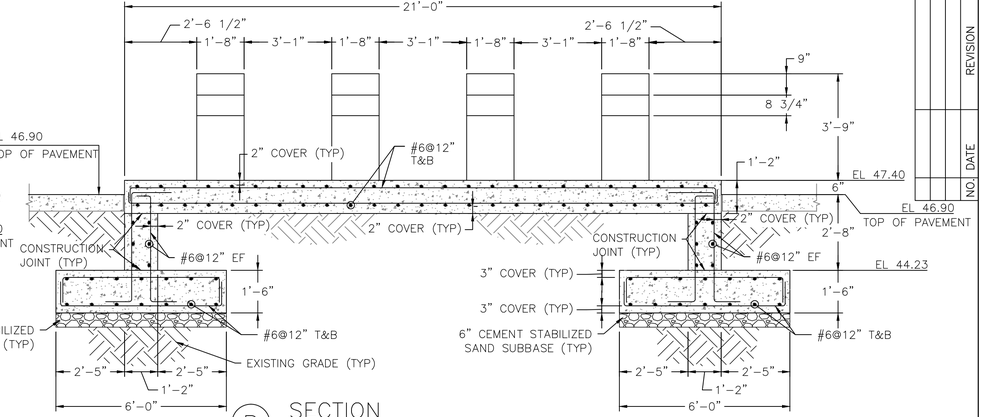

B SECTION

0 2' 4' 6' SCALE: 3/8"=1'-0"

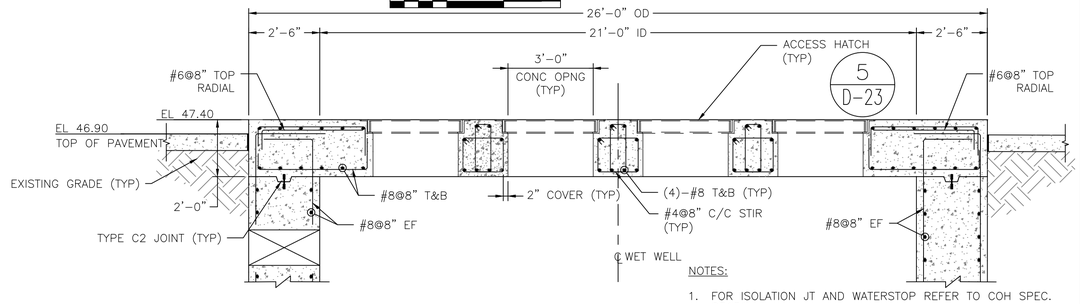

C SECTION

0 2' 4' 6' SCALE: 3/8"=1'-0"

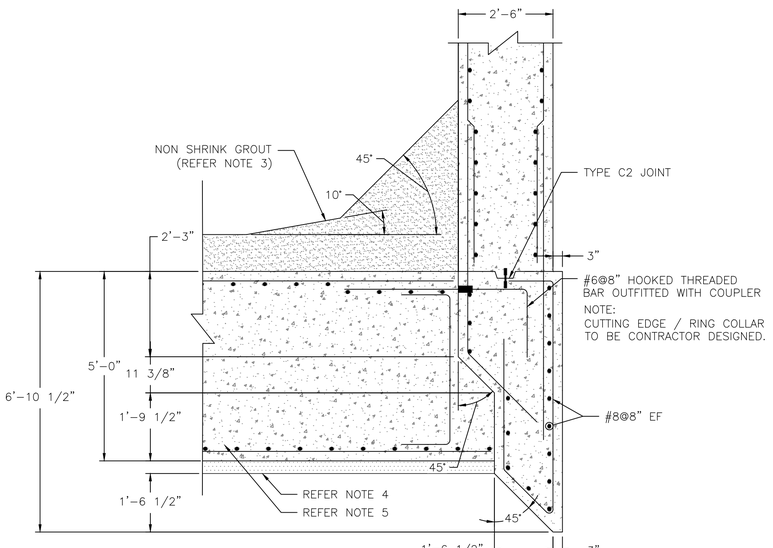

3 DETAIL

0 1' 2' 4' SCALE: 1/2"=1'-0"

NOTES:

1. FOR ISOLATION JT AND WATERSTOP REFER TO COH SPEC. 03151.
2. PROVIDE PROTECTIVE COATING ON ALL INTERIOR CONCRETE SURFACE OF THE WET WELL. REF TO COH PROTECTIVE COATINGS SPEC. 09901, SYSTEM 108.
3. FOR NON SHRINK GROUT REFER TO COH SPEC. 03600
4. EXCAVATE AND REPLACE 2 FEET OF SOIL WITH STRUCTURAL FILL IN ACCORDANCE WITH THE GEOTECHNICAL REPORT.
5. CONCRETE SHALL BE POURED IN THREE HORIZONTAL LAYERS:
   FIRST LAYER: 2 FEET THICK
   SECOND LAYER: 2 FEET THICK
   THIRD LAYER: 1 FOOT THICK
   EACH LAYER SHOULD BE PROPERLY COMPACTED BEFORE PLACING THE SUBSEQUENT LAYER (ACI 304R-00 SECTION 5.6).

NO.	DATE	REVISION	APP.

ARCADIS
Infrastructure · Water · Environment · Buildings
1330 Post Oak Blvd, Suite 2250
Houston, TX 77056
Tel: 713-953-4800
Fax: 713-977-4620
www.arcadis.com
Texas Registered Engineering Firm F-533

SURVEYED BY: AMANI ENGR.
FB NO. P-6335

STATE OF TEXAS
TANVIR HOSSAIN
121767
LICENSED
PROFESSIONAL ENGINEER

CITY OF HOUSTON
HOUSTON PUBLIC WORKS

LIFT STATION REHABILITATION & RECONSTRUCTION CONSENT DECREE

RED GULLY LIFT STATION WET WELL SECTION

S-17

WBS NUMBER	FOR CITY OF HOUSTON USE ONLY
R-000267-0175-4	
DRAWING SCALE	
AS NOTED	
CITY OF HOUSTON PM	
NP NAWARAJ PANTA, P.E.	
SHEET NO. 129 OF 312	

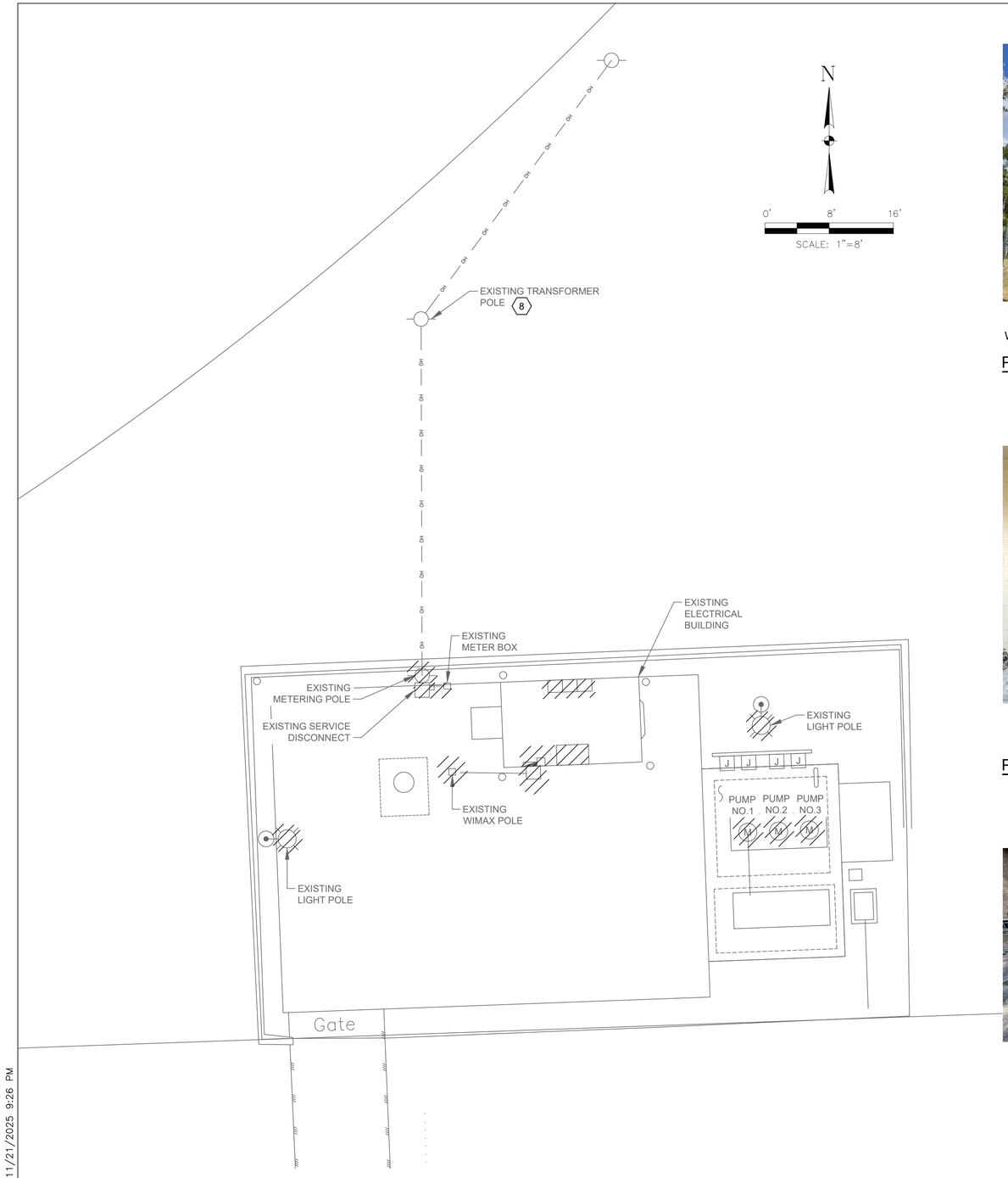

RED GULLY LIFT STATION
ELECTRICAL DEMOLITION SITE

PLAN

1"= 8'-0"

EXISTING METERING POLE
W/SERVICE DISCONNECT & METER

PHOTOGRAPH A - NTS 1

EXISTING LIGHT POLE
(TYP. OF 2)

PHOTOGRAPH B - NTS 2

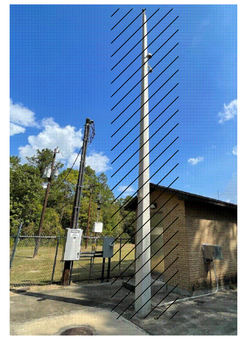

EXISTING WIMAX
POLE

PHOTOGRAPH C - NTS 3

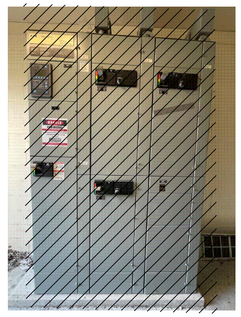

EXISTING MCC
(IN ELECTRICAL BUILDING)

PHOTOGRAPH D - NTS 4

EXISTING CONTROL PANEL
(IN ELECTRICAL BUILDING)

PHOTOGRAPH E - NTS 5

EXISTING LIGHTING PANEL & XFMR
(IN ELECTRICAL BUILDING)

PHOTOGRAPH F - NTS 6

EXISTING PUMP
J-BOX

PHOTOGRAPH G - NTS 7

NOTES BY SYMBOL "#":

1. EXISTING ELECTRICAL SERVICE POLE, SERVICE RACK, METER, PT BOX, MAIN DISCONNECT SWITCH TO BE DEMOLISHED AND REMOVED.
2. EXISTING SITE LIGHTING INCLUDING POLE FIXTURES, CONDUITS AND WIRES TO BE DEMOLISHED AND REMOVED
3. EXISTING WIMAX POLE FIXTURES, CONDUITS AND WIRES TO BE DEMOLISHED AND REMOVED.
4. EXISTING MCC, ASSOCIATED CONDUITS AND WIRES IN ELECTRICAL BUILDING TO BE DEMOLISHED AND REMOVED.
5. EXISTING CONTROL PANEL, ASSOCIATED CONDUITS AND WIRES IN ELECTRICAL BUILDING TO BE DEMOLISHED AND REMOVED.
6. EXISTING TRANSFORMER, LIGHTING PANEL, ASSOCIATED CONDUITS AND WIRES IN ELECTRICAL BUILDING TO BE DEMOLISHED AND REMOVED.
7. EXISTING ELECTRICAL EQUIPMENT AND DEVICE (PUMP J-BOXES) IN LIFT STATION TO BE DEMOLISHED AND REMOVED.
8. EXISTING POLE MOUNT TRANSFORMER BANK (3 X 50KVA) SHALL BE UPGRADED BY CPE DUE TO THE PROPOSED ELECTRICAL LOAD.

LEGEND:

ITEMS TO BE DEMOLISHED.

NO.	DATE	REVISION	APP.

GAI
Gupta & Associates, Inc.
CONSULTING ENGINEERING
Registration No. F-2593
302 Dennis St.,
Houston, Texas 77006
Tel: 713-636-2936
Fax: 713-636-2987
email: hforouzan@gaiconsulting.com

ARCADIS
Infrastructure · Water · Environment · Buildings
1330 Post Oak Blvd, Suite 2250
Houston, TX 77056
Tel: 713-953-4800
Fax: 713-977-4620
www.arcadis.com
Texas Registered Engineering Firm F-533

SURVEYED BY: AMANI ENGR.
FB NO. P-6335

STATE OF TEXAS
H. A. FOROUZAN
77748
REGISTERED PROFESSIONAL ENGINEER
11/18/2025

CITY OF HOUSTON
HOUSTON PUBLIC WORKS

LIFT STATION REHABILITATION & RECONSTRUCTION
CONSENT DECREE

RED GULLY LIFT STATION ELECTRICAL DEMOLITION SITE PLAN

E-25

WBS NUMBER	FOR CITY OF HOUSTON USE ONLY
R-000267-0175-4	
DRAWING SCALE	
1" = 8'-0"	
CITY OF HOUSTON PM	
NP NAWARAJ PANTA, P.E.	
SHEET NO. 130 OF 312	

FILE PATH: O:\H8103_Houston Lift Station Removal And Replacement (CMAR)\6 Drawings\Electrical\Working\Red Gully\Red Gully_E-01.dwg
PLOT STYLE: COH.ctb PLOTTED: 11/21/2025 9:26 PM

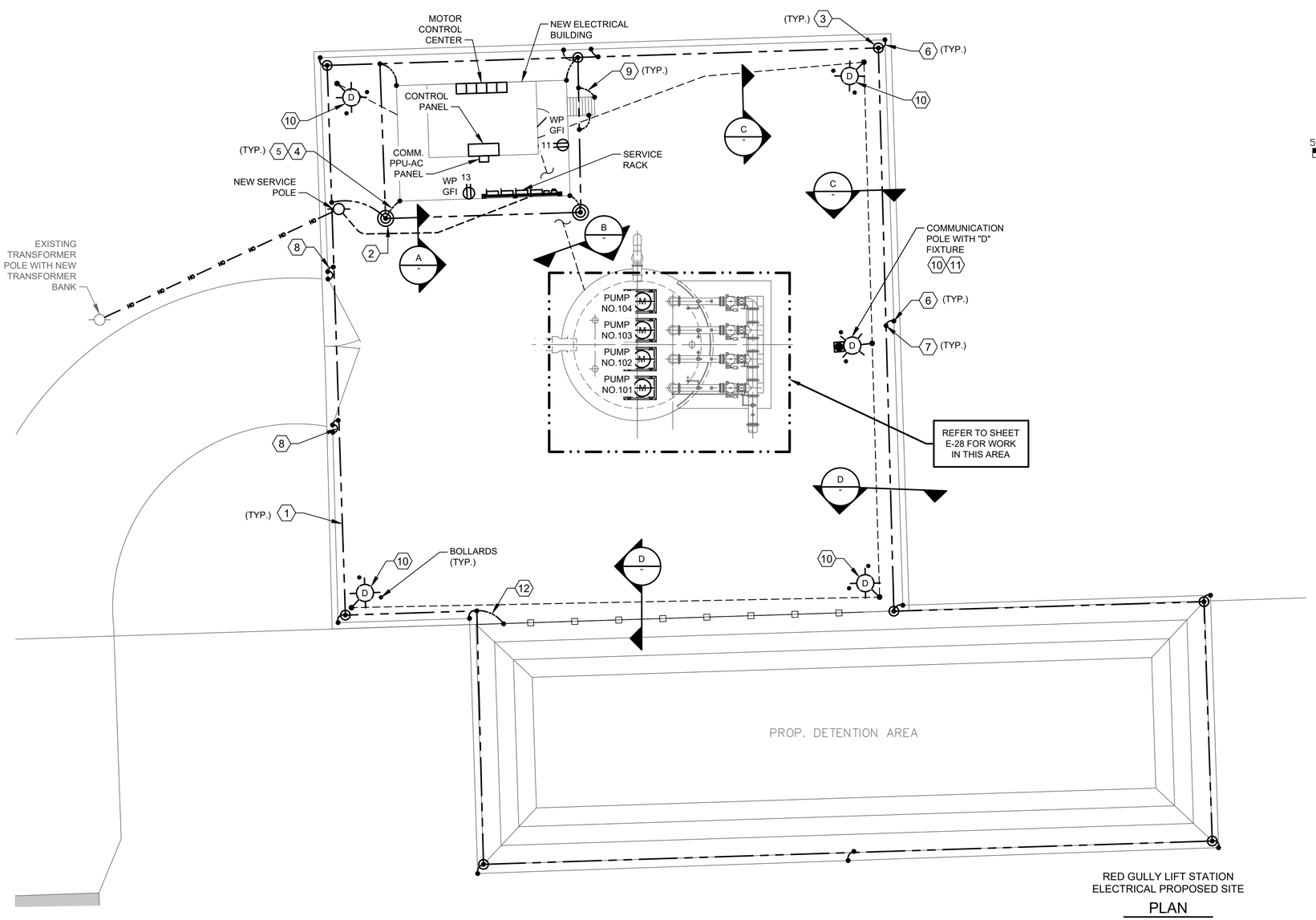

RED GULLY LIFT STATION
ELECTRICAL PROPOSED SITE

PLAN

1"=10'-0"

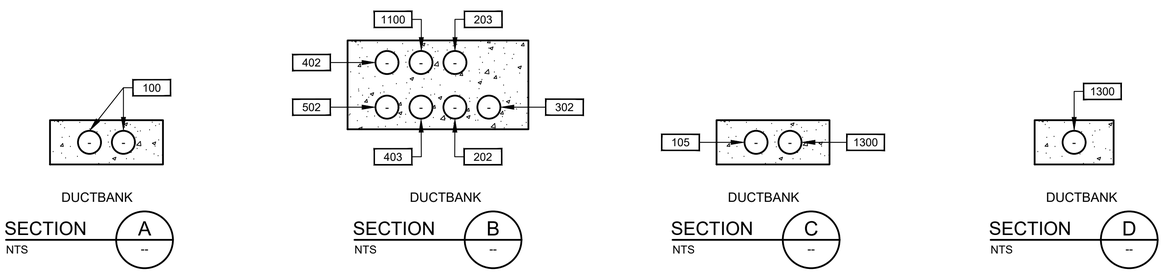

DUCTBANK SECTION A NTS --

DUCTBANK SECTION B NTS --

DUCTBANK SECTION C NTS --

DUCTBANK SECTION D NTS --

N

5 0 5 10

SCALE: 1" = 10'

NOTES BY SYMBOL "⟨#⟩":

1. MAIN BURIED GROUND LOOP, #4/0 BARE COPPER CONDUCTOR.
2. GROUND TEST WELL.
3. GROUND ROD.
4. #4/0 BARE COPPER BONDING CONDUCTOR.
5. BOND REBAR IN CONCRETE FOOTER OR SLAB TO MAIN BURIED GROUND LOOP.
6. #2/0 BARE COPPER GROUND BOND TO FENCE POST.
7. THERMOWELD CABLE CONNECTION.
8. PROVIDE FLEX BONDING JUMPER ACROSS GATE HINGES.
9. #2/0 BARE COPPER GROUND BOND TO GUARDRAIL.
10. YARD LIGHT CONTROLLED BY LIGHTING SWITCH.
11. REFER TO COMMUNICATION POLE DETAIL TO INSTALL POWER AND COMMUNICATION CABLES.
12. #2/0 BARE COPPER GROUND TO BE BONDED TO GUARDRAIL OF DETENTION POND AS REQUIRED.

NO.	DATE	REVISION	APP.

GAI
Gupta & Associates, Inc.
CONSULTING ENGINEERING
Registration No. F-2593
302 Dennis St.,
Houston, Texas 77006
Tel: 713-636-2936
Fax: 713-636-2987
email: hforouzan@gaiconsulting.com

ARCADIS
Infrastructure · Water · Environment · Buildings
1330 Post Oak Blvd, Suite 2250
Houston, TX 77056
Tel: 713-953-4800
Fax: 713-977-4620
www.arcadis.com
Texas Registered Engineering Firm F-533

SURVEYED BY: AMANI ENGR.
FB NO. P-6335

STATE OF TEXAS
H. A. FOROUZAN
77748
REGISTERED PROFESSIONAL ENGINEER
11/18/2025

CITY OF HOUSTON

HOUSTON PUBLIC WORKS

LIFT STATION REHABILITATION & RECONSTRUCTION CONSENT DECREE

RED GULLY LIFT STATION ELECTRICAL PROPOSED SITE PLAN

E-26

WBS NUMBER	FOR CITY OF HOUSTON USE ONLY
R-000267-0175-4	
DRAWING SCALE	
3/32" = 1'-0"	
CITY OF HOUSTON PM	
NP NAWARAJ PANTA, P.E.	
SHEET NO. 131 OF 312	

FILE PATH: O:\H8103_Houston Lift Station Removal And Replacement (CMAR)\6 Drawings\Electrical\Working\Red Gully\Red Gully_E-02.dwg
PLOT STYLE: GAI.ctb PLOTTED: 11/21/2025 9:26 PM

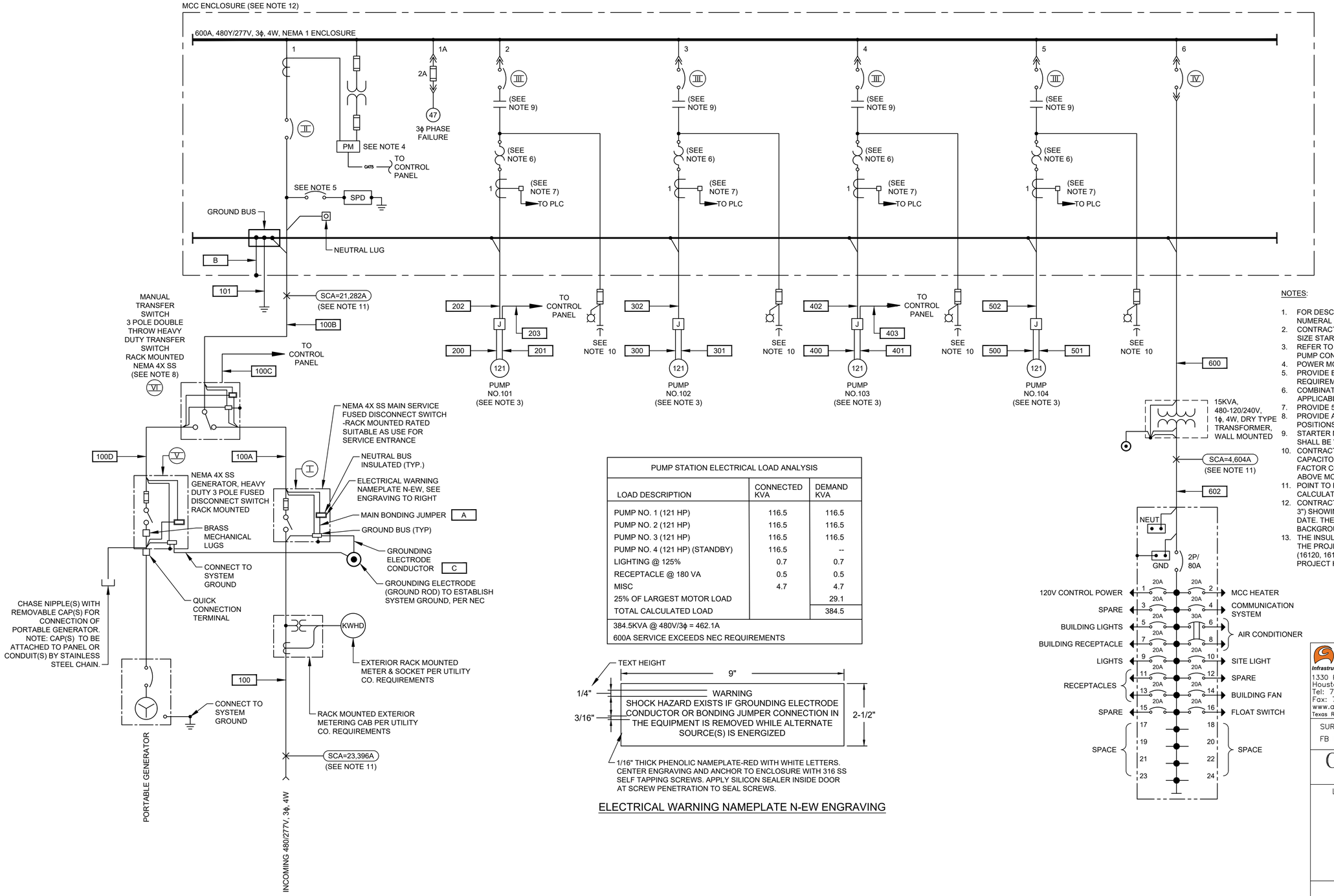

PUMP STATION ELECTRICAL LOAD ANALYSIS		
LOAD DESCRIPTION	CONNECTED KVA	DEMAND KVA
PUMP NO. 1 (121 HP)	116.5	116.5
PUMP NO. 2 (121 HP)	116.5	116.5
PUMP NO. 3 (121 HP)	116.5	116.5
PUMP NO. 4 (121 HP) (STANDBY)	116.5	--
LIGHTING @ 125%	0.7	0.7
RECEPTACLE @ 180 VA	0.5	0.5
MISC	4.7	4.7
25% OF LARGEST MOTOR LOAD		29.1
TOTAL CALCULATED LOAD		384.5
384.5KVA @ 480V/3ϕ = 462.1A		
600A SERVICE EXCEEDS NEC REQUIREMENTS		

1/16" THICK PHENOLIC NAMEPLATE-RED WITH WHITE LETTERS. CENTER ENGRAVING AND ANCHOR TO ENCLOSURE WITH 316 SS SELF TAPPING SCREWS. APPLY SILICON SEALER INSIDE DOOR AT SCREW PENETRATION TO SEAL SCREWS.

ELECTRICAL WARNING NAMEPLATE N-EW ENGRAVING

NOTES:

1. FOR DESCRIPTION AND RATINGS OF ITEMS INDICATED WITH ROMAN NUMERAL FLAGS, SEE DEVICE RATINGS SCHEDULE.
2. CONTRACTOR SHALL VERIFY ACTUAL AMPERAGES OF MOTORS AND SIZE STARTERS, MOTOR CIRCUIT PROTECTORS, ETC. ACCORDINGLY.
3. REFER TO RELATED INSTRUMENT DRAWINGS I-34, I-35, I-36, I-37 FOR PUMP CONTROL SCHEMATIC DIAGRAM.
4. POWER MONITOR.
5. PROVIDE BREAKER ACCORDING TO MANUFACTURER'S REQUIREMENTS.
6. COMBINATION OF CT AND OVERLOAD RELAY AS REQUIRED. WHERE APPLICABLE.
7. PROVIDE 5A PRIMARY TO 4-20mA CURRENT TRANSDUCER.
8. PROVIDE A NORMALLY OPEN (NO) AUXILIARY CONTACT FOR BOTH ON POSITIONS.
9. STARTER NEMA SIZE 2 IS MINIMUM AND NEMA SIZE 3 OR GREATER SHALL BE VACUUM TYPE.
10. CONTRACTOR TO COORDINATE POWER FACTOR CORRECTION CAPACITOR SIZE WITH PUMP MANUFACTURER. MINIMUM 95% POWER FACTOR CORRECTION AT FULL LOAD. MOUNT CAPACITORS EXTERNAL ABOVE MCC ON THE APPROPRIATE SECTION.
11. POINT TO POINT METHOD IS USED FOR SHORT CIRCUIT CURRENT CALCULATION.
12. CONTRACTOR SHALL PROVIDE A PERMANENTLY AFFIXED LABEL (2" X 3") SHOWING THE AVAILABLE FAULT CURRENT AND CALCULATION DATE. THE LABEL SHALL BE BLUE LETTERING ON A CONTRASTING BACKGROUND.
13. THE INSULATION TYPES OF ALL ELECTRICAL CONDUCTORS USED IN THE PROJECT HAVE BEEN SPECIFIED IN ELECTRICAL SPECIFICATIONS (16120, 16121, AND 16122). THE TYPES OF CONDUITS USED IN THE PROJECT HAS BEEN SPECIFIED IN ELECTRICAL SPECIFICATIONS 16111.

GAI
Gupta & Associates, Inc.
CONSULTING ENGINEERING
Registration No. F-2593
302 Dennis St., Houston, Texas 77006
Tel: 713-636-2936
Fax: 713-636-2987
email: hforouzan@gaiconsulting.com

ARCADIS
Infrastructure · Water · Environment · Buildings
1330 Post Oak Blvd, Suite 2250
Houston, TX 77056
Tel: 713-953-4800
Fax: 713-977-4620
www.arcadis.com
Texas Registered Engineering Firm F-533

SURVEYED BY: AMANI ENGR.
FB NO. P-6335

STATE OF TEXAS
H. A. FOROUZAN
77748
REGISTERED PROFESSIONAL ENGINEER
11/18/2025

CITY OF HOUSTON
HOUSTON PUBLIC WORKS

LIFT STATION REHABILITATION & RECONSTRUCTION CONSENT DECREE

RED GULLY LIFT STATION ELECTRICAL SINGLE-LINE DIAGRAM

E-27

WBS NUMBER	FOR CITY OF HOUSTON USE ONLY
R-000267-0175-4	
DRAWING SCALE	
NONE	
CITY OF HOUSTON PM	
NP NAWARAJ PANTA, P.E.	
SHEET NO. 132 OF 312	

REVISION | NO. | DATE | APP.

FILE PATH: O:\H8103_Houston Lift Station Removal And Replacement (CMAR)\6 Drawings\Electrical\Working\Red Gully\Red Gully_E-03.dwg
PLOT STYLE: GAI.ctb PLOTTED: 11/21/2025 9:27 PM

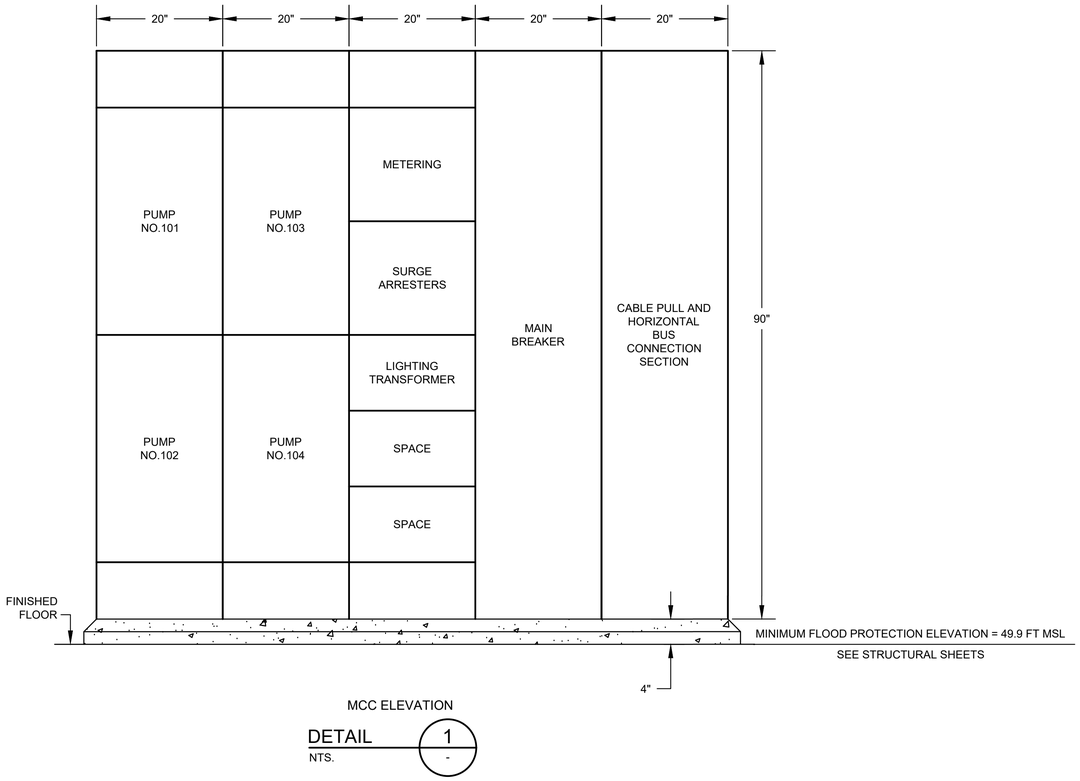

MCC ELEVATION

DETAIL 1

NTS. -

ITEM	CIRCUIT	DESCRIPTION	RATINGS FOR PUMP SIZES INDICATED
I	--	MAIN DISCONNECT SWITCH	
		OPERATING VOLTAGE	480V
		CURRENT RATING	600A
		CURRENT LIMITING FUSES TYPE & SIZE	CLASS L 600A
II	1	MAIN BREAKER	
		3 POLE - TYPE	MOLDED CASE
		MOUNTING	FIXED
		OPERATING VOLTAGE	480V
		FRAME SIZE	600A
		TRIP SETTING	600A
		INTERRUPT CAPACITY	65KA SYM
		OPTIONS	NONE
III	2 3 4 5	PUMP MOTOR STARTERS	
		QUANTITY	4
		MOUNTING	FIXED
		SHORT CIRCUIT PROTECTION	
		3 POLE - TYPE	MCP
		OPERATING VOLTAGE	480V
		FRAME SIZE	250A
		TRIP SETTING	FIELD ADJ
		INTERRUPT CAPACITY	65KA SYM
		MOTOR STARTING CONTACTOR	
		3 POLE - TYPE	VACUUM
		OPERATING VOLTAGE	480V
		SIZE (SEE NOTE 4)	NEMA 5
		OVERLOAD PROTECTION TYPE	SOLID STATE MOR
		CT RATIO	200:5
IV	6	LIGHTING TRANSFORMER FEEDER BREAKER	
		NO. OF POLES	2
		TYPE	MOLDED CASE
		OPERATING VOLTAGE	480V
		FRAME SIZE	100A
		TRIP SETTING	40A
		INTERRUPT CAPACITY	65KA SYM
V	--	GENERATOR FUSED DISCONNECT SWITCH	3P, 4W SN
		OPERATING VOLTAGE	480V
		CURRENT RATING	600A
		CURRENT LIMITING FUSES TYPE & SIZE	CLASS L 600A
VI	--	MANUAL TRANSFER SWITCH	
		OPERATING VOLTAGE	480V
		CURRENT RATING	600A

NO.	DATE	REVISION	APP.

GAI
Gupta & Associates, Inc.
CONSULTING ENGINEERING
Registration No. F-2593
302 Dennis St.,
Houston, Texas 77006
Tel: 713-636-2936
Fax: 713-636-2987
email: hforouzan@gaiconsulting.com

ARCADIS
Infrastructure · Water · Environment · Buildings
1330 Post Oak Blvd, Suite 2250
Houston, TX 77056
Tel: 713-953-4800
Fax: 713-977-4620
www.arcadis.com
Texas Registered Engineering Firm F-533

SURVEYED BY: AMANI ENGR.
FB NO. P-6335

STATE OF TEXAS
H. A. FOROUZAN
77748
REGISTERED PROFESSIONAL ENGINEER
11/18/2025

CITY OF HOUSTON

HOUSTON PUBLIC WORKS

LIFT STATION REHABILITATION & RECONSTRUCTION CONSENT DECREE

RED GULLY LIFT STATION MCC ELEVATION & DEVICE RATING SCHEDULE

E-28

WBS NUMBER	FOR CITY OF HOUSTON USE ONLY
R-000267-0175-4	
DRAWING SCALE	
AS SHOWN	
CITY OF HOUSTON PM	
NP NAWARAJ PANTA, P.E.	
SHEET NO. 133 OF 312	

FILE PATH: O:\H8103_Houston Lift Station Removal And Replacement (CMAR)\5 Construction Phase\Addenda\Addendum No.1\Red Gully\Red Gully_E-04.dwg
PLOT STYLE: GAI.ctb PLOTTED: 1/14/2026 3:11 PM

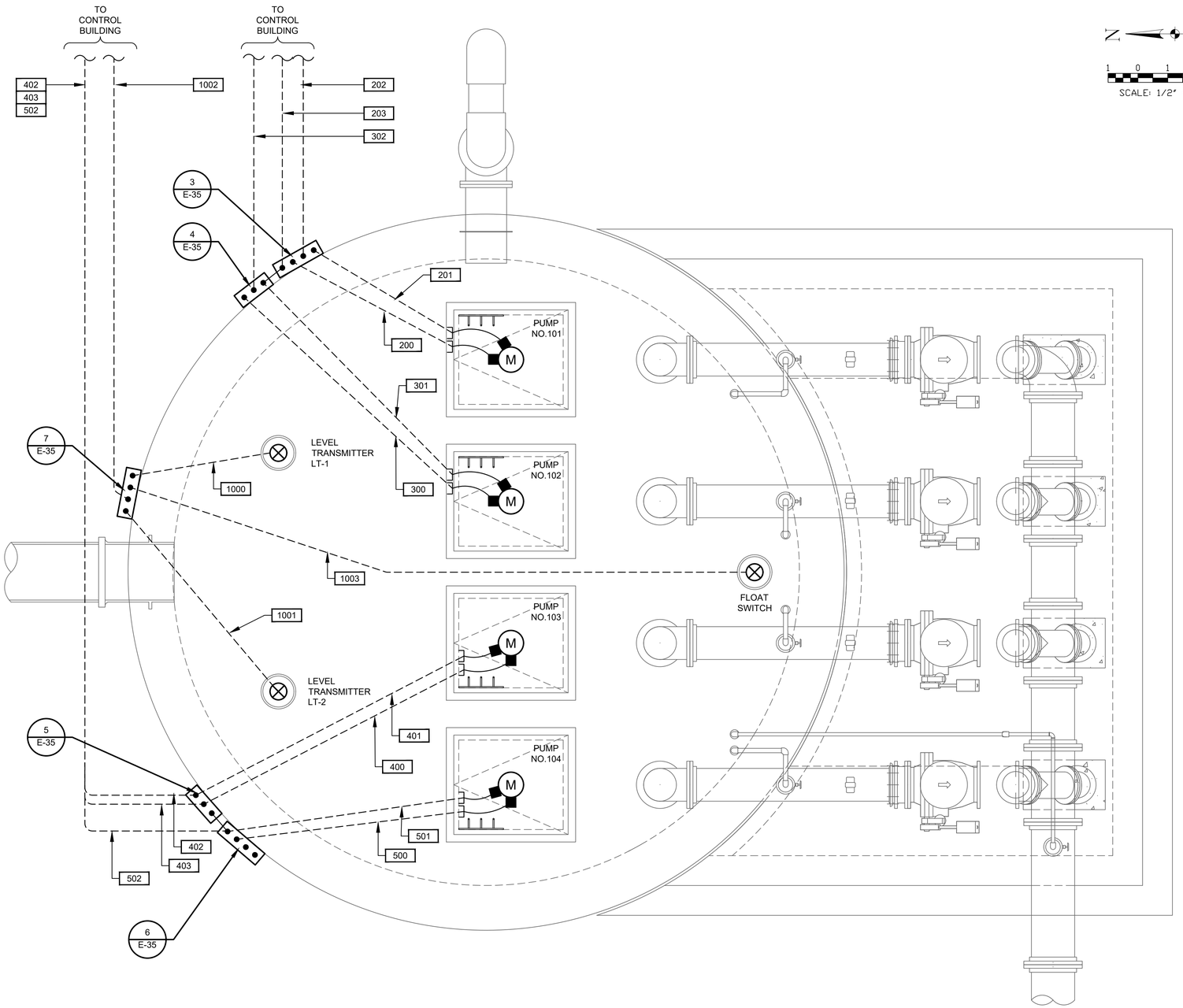

RED GULLY LIFT STATION
ENLARGED PLAN

PLAN

1/2"=1'-0"

1 0 1 2 3

SCALE: 1/2" = 1'-0"

NOTES:

1. THE ELECTRICAL INSTALLATION IN THE WET WELL SHALL BE EXPLOSION PROOF, IN ACCORDANCE WITH THE NATIONAL ELECTRICAL CODE FOR CLASS I, DIVISION 1 LOCATIONS.
2. INSIDE WETWELL RATED NEMA CLASS 1, DIV. 1. OUTSIDE ABOVE GROUND, AROUND WETWELL RATED CLASS 1, DIV. 2 ACCORDING TO NFPA 820.

GENERAL NOTES:

1. REFER TO SHEET D-34 & D-35 FOR LEVEL TRANSMITTER & FLOAT SWITCH MOUNTING.

NO.	DATE	REVISION	APP.

GAI
Gupta & Associates, Inc.
CONSULTING ENGINEERING
Registration No. F-2593
302 Dennis St.,
Houston, Texas 77006
Tel: 713-636-2936
Fax: 713-636-2987
email: hforouzan@gaiconsulting.com

ARCADIS
Infrastructure · Water · Environment · Buildings
1330 Post Oak Blvd, Suite 2250
Houston, TX 77056
Tel: 713-953-4800
Fax: 713-977-4620
www.arcadis.com
Texas Registered Engineering Firm F-533

SURVEYED BY: AMANI ENGR.
FB NO. P-6335

STATE OF TEXAS
H. A. FOROUZAN
77748
REGISTERED PROFESSIONAL ENGINEER
11/18/2025

CITY OF HOUSTON

HOUSTON PUBLIC WORKS

LIFT STATION REHABILITATION & RECONSTRUCTION
CONSENT DECREE

RED GULLY LIFT STATION ELECTRICAL ENLARGED PLAN

E-29

WBS NUMBER	FOR CITY OF HOUSTON USE ONLY
R-000267-0175-4	
DRAWING SCALE	
1/2" = 1'-0"	
CITY OF HOUSTON PM	
NP NAWARAJ PANTA, P.E.	
SHEET NO. 134 OF 312	

FILE PATH: O:\H8103_Houston Lift Station Removal And Replacement (CMAR)\6 Drawings\Electrical\Working\Red Gully\Red Gully_E-05.dwg
PLOT STYLE: GAI.ctb PLOTTED: 11/21/2025 9:27 PM

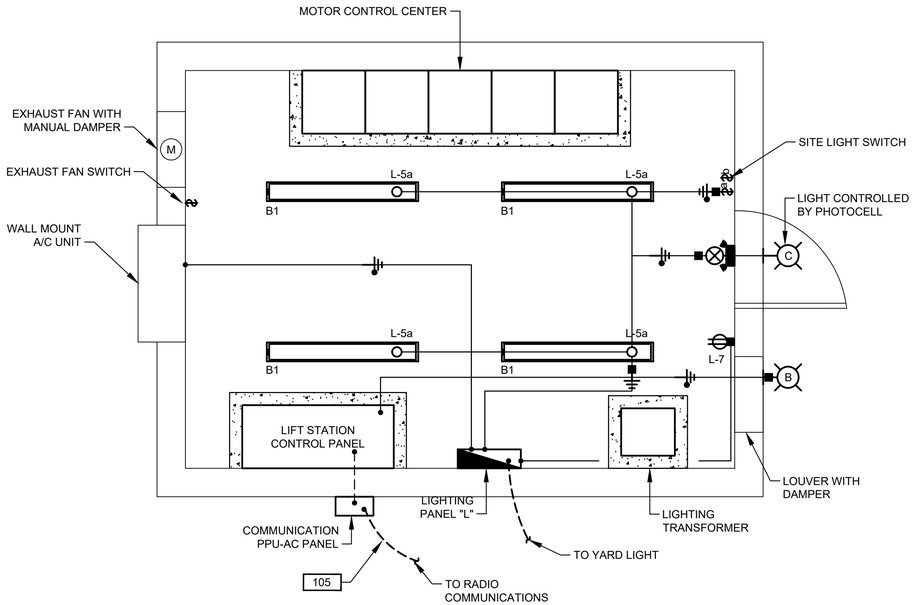

LIGHTING & COMMUNICATION SYSTEM PLAN

1/2"=1'-0"

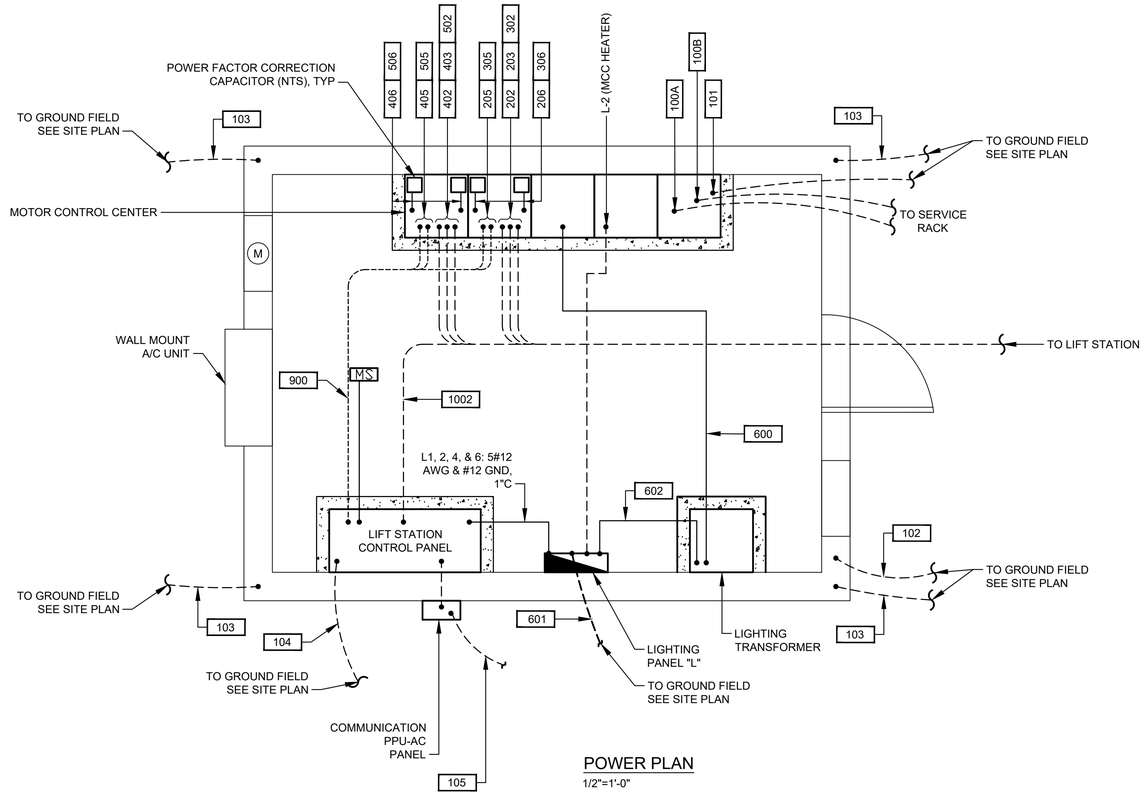

POWER PLAN

1/2"=1'-0"

TYPICAL PANEL INSTALLATION

DETAIL 1 / -

NTS.

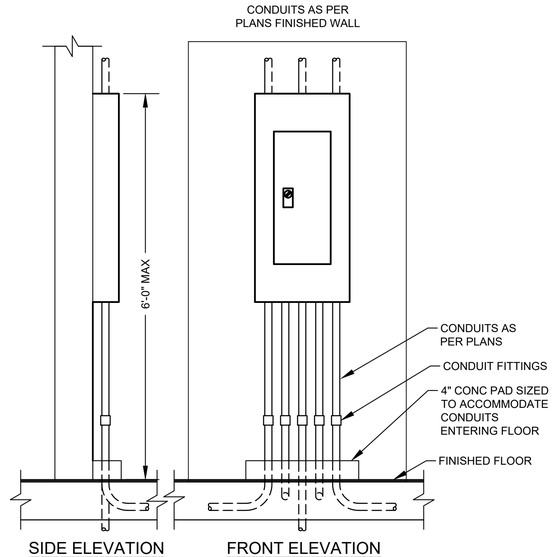

SIDE ELEVATION FRONT ELEVATION

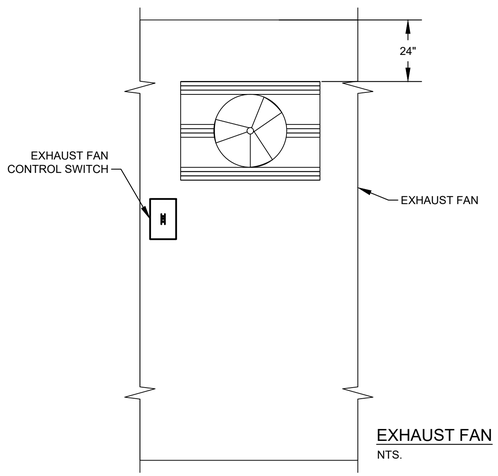

EXHAUST FAN

NTS.

NO.	DATE	REVISION	APP.

GAI
Gupta & Associates, Inc.
CONSULTING ENGINEERING
Registration No. F-2593
302 Dennis St.,
Houston, Texas 77006
Tel: 713-636-2936
Fax: 713-636-2987
email: hforouzan@gaiconsulting.com

ARCADIS
Infrastructure · Water · Environment · Buildings
1330 Post Oak Blvd, Suite 2250
Houston, TX 77056
Tel: 713-953-4800
Fax: 713-977-4620
www.arcadis.com
Texas Registered Engineering Firm F-533

STATE OF TEXAS
H. A. FOROUZAN
77748
REGISTERED PROFESSIONAL ENGINEER
11/18/2025

SURVEYED BY: AMANI ENGR.
FB NO. P-6335

CITY OF HOUSTON

HOUSTON PUBLIC WORKS

LIFT STATION REHABILITATION & RECONSTRUCTION
CONSENT DECREE

RED GULLY LIFT STATION ELECTRICAL BUILDING PLAN

E-30

WBS NUMBER	FOR CITY OF HOUSTON USE ONLY
R-000267-0175-4	
DRAWING SCALE	
AS SHOWN	
CITY OF HOUSTON PM	
NP NAWARAJ PANTA, P.E.	
SHEET NO. 135 OF 312	

FILE PATH: O:\H8103_Houston Lift Station Removal And Replacement (CMAR)\6 Drawings\Electrical\Working\Red Gully\Red Gully_E-06.dwg
PLOT STYLE: GAI.ctb PLOTTED: 11/21/2025 9:28 PM

	DESCRIPTION	SERVICE		ROUTING			CONDUIT & WIRE SIZE
		VOLTAGE	AMPS OR HP	FROM	TO	VIA	
A	MAIN BONDING JUMPER	--	--	MAIN FUSED DISCONNECT NEUTRAL	MAIN FUSED DISCONNECT GROUND	--	# 2/0 GND.
B	EQUIPMENT BONDING JUMPER	--	--	MCC/POWER PANEL ENCLOSURE	POWER/CONTROL PANEL & EQUIPMENT GROUND BUS	--	# 2/0 GND.
C	GROUNDED ELECTRODE CONDUCTOR	--	--	GROUNDING ELECTRODE	MAIN SERVICE FUSED DISCONNECT	--	# 2/0 GND.
100	SERVICE ENTRANCE	480V	600A	UTILITY POWER SERVICE	CT CAN		2 SETS OF 3#350 MCM, #1/0 NEUT., #1/0 GND., EACH
100A	MCC SERVICE POWER	480V	600A	MANUAL TRANSFER SWITCH	MAIN SERVICE FUSED DISCONNECT	--	2 SETS OF 3#350 MCM, #1/0 NEUT., #1/0 GND., EACH
100B	MCC SERVICE POWER	480V	600A	MANUAL TRANSFER SWITCH	MAIN BREAKER IN MCC	--	2 SETS OF 3#350 MCM, #1/0 NEUT., #1/0 GND., EACH 1
100C	NORMAL/EMERGENCY POWER STATUS	24VDC	--	MANUAL TRANSFER SWITCH	CONTROL PANEL	--	4#14, #14 GND., 1"C.
100D	EMERGENCY POWER	480V	600A	GENERATOR DISCONNECT	MANUAL TRANSFER SWITCH	--	2 SETS OF 3#350 MCM, #1/0 NEUT., #1/0 GND., EACH 1
101	GROUND ELECTRODE CONDUCTOR	--	--	MCC	GROUND FIELD	--	#2/0 GND.
102	GROUND ELECTRODE CONDUCTOR	--	--	BUILDING STEEL	GROUND FIELD	--	#2/0 GND.
103	BUILDING GROUNDING	--	--	BUILDING REBAR	LIGHTNING GROUND ROD	--	#2/0 GND.
104	GROUND ELECTRODE CONDUCTOR	--	--	CONTROL PANEL OR MOTOR CONTROL CENTER	GROUND FIELD	--	#2/0 GND.
105	COMMUNICATION	--	--	COMMUNICATION POLE	CONTROL PANEL	--	1-1/2"C. CAT-5E
200	PUMP NO. 101 POWER	480V	121 HP	PUMP NO. 101	PUMP NO. 101 JUNCTION BOX	--	MANUFACTURER CABLE IN 3-1/2"C.
201	PUMP NO. 101 CONTROLS	120V	--	PUMP NO. 101	PUMP NO. 101 JUNCTION BOX	--	MANUFACTURER CABLE IN 3-1/2"C.
202	PUMP NO. 101 POWER	480V	121 HP	PUMP NO. 101 JUNCTION BOX	PUMP STARTER	--	3#3/0 AWG., #6 GND., 2"C.
203	COMBINED PUMP CONTROLS	120V	--	PUMP NO. 101 JUNCTION BOX	PUMP STARTER	--	COMBINE 200 & 300 WIRING, 10#14 1"C.
205	PUMP NO. 1 CONTROLS	120V	--	STARTER IN MOTOR CONTROL CENTER	CONTROL PANEL	--	12#14 1"C.
206	PUMP NO. 1 CAPACITOR	480V	TBD	PUMP NO. 1 MOTOR STARTER	POWER FACTOR CORRECTION CAPACITOR	--	3#6, #8 GND., 1"C.
300	PUMP NO. 102 POWER	480V	121 HP	PUMP NO. 102	PUMP NO. 102 JUNCTION BOX	--	MANUFACTURER CABLE IN 3-1/2"C.
301	PUMP NO. 102 CONTROLS	120V	--	PUMP NO. 102	PUMP NO. 102 JUNCTION BOX	--	MANUFACTURER CABLE IN 3-1/2"C.
302	PUMP NO. 102 POWER	480V	121 HP	PUMP NO. 102 JUNCTION BOX	PUMP STARTER	--	3#3/0 AWG., #6 GND., 2" C.
305	PUMP NO. 102 CONTROLS	120V	--	STARTER IN MOTOR CONTROL CENTER	CONTROL PANEL	--	12#14 1"C.
306	PUMP NO. 102 CAPACITOR	480V	TBD	PUMP NO. 102 MOTOR STARTER	POWER FACTOR CORRECTION CAPACITOR	--	3#6, #8 GND., 1"C.
400	PUMP NO. 103 POWER	480V	121 HP	PUMP NO. 103	PUMP NO. 103 JUNCTION BOX	--	MANUFACTURER CABLE IN 3-1/2"C.
401	PUMP NO. 103 CONTROLS	120V	--	PUMP NO. 103	PUMP NO. 103 JUNCTION BOX	--	MANUFACTURER CABLE IN 3-1/2"C.
402	PUMP NO. 103 POWER	480V	121 HP	PUMP NO. 103 JUNCTION BOX	PUMP STARTER	--	3#3/0 AWG., #6 GND., 2" C.
403	COMBINED PUMP CONTROLS	120V	--	PUMP NO. 103 JUNCTION BOX	CONTROL PANEL	--	COMBINE 400 & 500 WIRING, 5#14 1"C.
405	PUMP NO. 103 CONTROLS	120V	--	STARTER IN MOTOR CONTROL CENTER	CONTROL PANEL	--	12#14 1"C.
406	PUMP NO. 103 CAPACITOR	480V	TBD	PUMP NO. 103 MOTOR STARTER	POWER FACTOR CORRECTION CAPACITOR	--	3#6, #8 GND., 1"C.
500	PUMP NO. 103 POWER	480V	121 HP	PUMP NO. 104	PUMP NO. 104 JUNCTION BOX	--	MANUFACTURER CABLE IN 3-1/2"C.
501	PUMP NO. 104 CONTROLS	120V	--	PUMP NO. 104	PUMP NO. 104 JUNCTION BOX	--	MANUFACTURER CABLE IN 3-1/2"C.
502	PUMP NO. 104 POWER	480V	121 HP	PUMP NO. 104 JUNCTION BOX	PUMP STARTER	--	3#3/0 AWG., #6 GND., 2" C.
505	PUMP NO. 104 CONTROLS	120V	--	STARTER IN MOTOR CONTROL CENTER	CONTROL PANEL	--	12#14 1"C.
506	PUMP NO. 104 CAPACITOR	480V	TBD	PUMP NO. 104 MOTOR STARTER	POWER FACTOR CORRECTION CAPACITOR	--	3#6, #8 GND., 1"C.
600	LIGHTING TRANSFORMER FEEDER	480V	40A	MOTOR CONTROL CENTER	LIGHTING TRANSFORMER	--	2#8, #6 GND., 1"C.
601	LIGHTING PANEL GROUND	--	--	LIGHTING PANEL	GROUND FIELD	--	#6 GND., 1"C.
602	LIGHTING PANEL FEEDER	120/240V	--	LIGHTING TRANSFORMER	LIGHTING PANEL	--	3#3, #6 GND., 1-1/4"C.
900	INTRUSION ALARM	24VDC	--	MOTION SWITCH	CONTROL PANEL	--	2 #14, 3/4"C.
1000	LEVEL TRANSMITTER	24VDC	--	TRANSMITTER	TRANSMITTER JUNCTION BOX	--	MANUFACTURER CABLE IN 2-1/2"C.
1001	LEVEL TRANSMITTER	24VDC	--	TRANSMITTER	TRANSMITTER JUNCTION BOX	--	MANUFACTURER CABLE IN 2-1/2"C.
1002	COMBINED LEVEL TRANSMITTERS & FLOAT SWITCH	24VDC	--	CONTROL PANEL	TRANSMITTER JUNCTION BOX	--	2 TRIAD #16, 4 #14, 2"C.
1003	WELL FLOAT SWITCHES	24VDC	--	TRANSMITTER JUNCTION BOX	FLOAT SWITCH NO.1 & NO.2	--	MANUFACTURER CABLE IN 2-1/2"C.
1100	120VAC FOR RECEPTACLE	120V	--	LIGHTING PANEL	RECEPTACLE ON PLATFORM	--	2#12, #12G, 1"C
1200	120VAC FOR RECEPTACLE	120V	--	LIGHTING PANEL	RECEPTACLE ON PLATFORM	--	2#12, #12G, 1"C
1300	SITE LIGHTING	120V	--	LIGHTING PANEL	SITE LIGHTS	VIA SITE LIGHTING SWITCH	2#12, #12G, 1"C

NO.	DATE	REVISION	APP.
1	01/16	ADDENDUM NO.1	HF

NOTES:

1. CONDUITS LABELED "FUTURE SPACE" ARE TO BE INSTALLED AND CAPPED IN FIELD.
2. ANY CONDUIT REQUIRING A CSBE SEAL, SHALL BE A MINIMUM SIZE OF 2 1/2".
3. ALL UNDERGROUND CONDUITS (SINGLE AND MULTI-RUN) TO BE ENCASED IN REINFORCED CONCRETE DUCTBANK.

GAI
Gupta & Associates, Inc.
CONSULTING ENGINEERING
Registration No. F-2593
302 Dennis St.,
Houston, Texas 77006
Tel: 713-636-2936
Fax: 713-636-2987
email: hforouzan@gaiconsulting.com

ARCADIS
Infrastructure · Water · Environment · Buildings
1330 Post Oak Blvd, Suite 2250
Houston, TX 77056
Tel: 713-953-4800
Fax: 713-977-4620
www.arcadis.com
Texas Registered Engineering Firm F-533

SURVEYED BY: AMANI ENGR.
FB NO. P-6335

STATE OF TEXAS
H. A. FOROUZAN
77748
REGISTERED
PROFESSIONAL ENGINEER
11/18/2025

CITY OF HOUSTON
HOUSTON PUBLIC WORKS

LIFT STATION REHABILITATION & RECONSTRUCTION
CONSENT DECREE

RED GULLY LIFT STATION ELECTRICAL CONDUIT SCHEDULE

E-31

WBS NUMBER	FOR CITY OF HOUSTON USE ONLY
R-000267-0175-4	
DRAWING SCALE	
NONE	
CITY OF HOUSTON PM	
NP NAWARAJ PANTA, P.E.	
SHEET NO. 136 OF 312	

FILE PATH: O:\H8103_Houston Lift Station Removal And Replacement (CMAR)\5 Construction Phase\Addenda\Addendum No.1\Red Gully\Red Gully_E-07.dwg
PLOT STYLE: GAI.ctb PLOTTED: 1/14/2026 3:11 PM

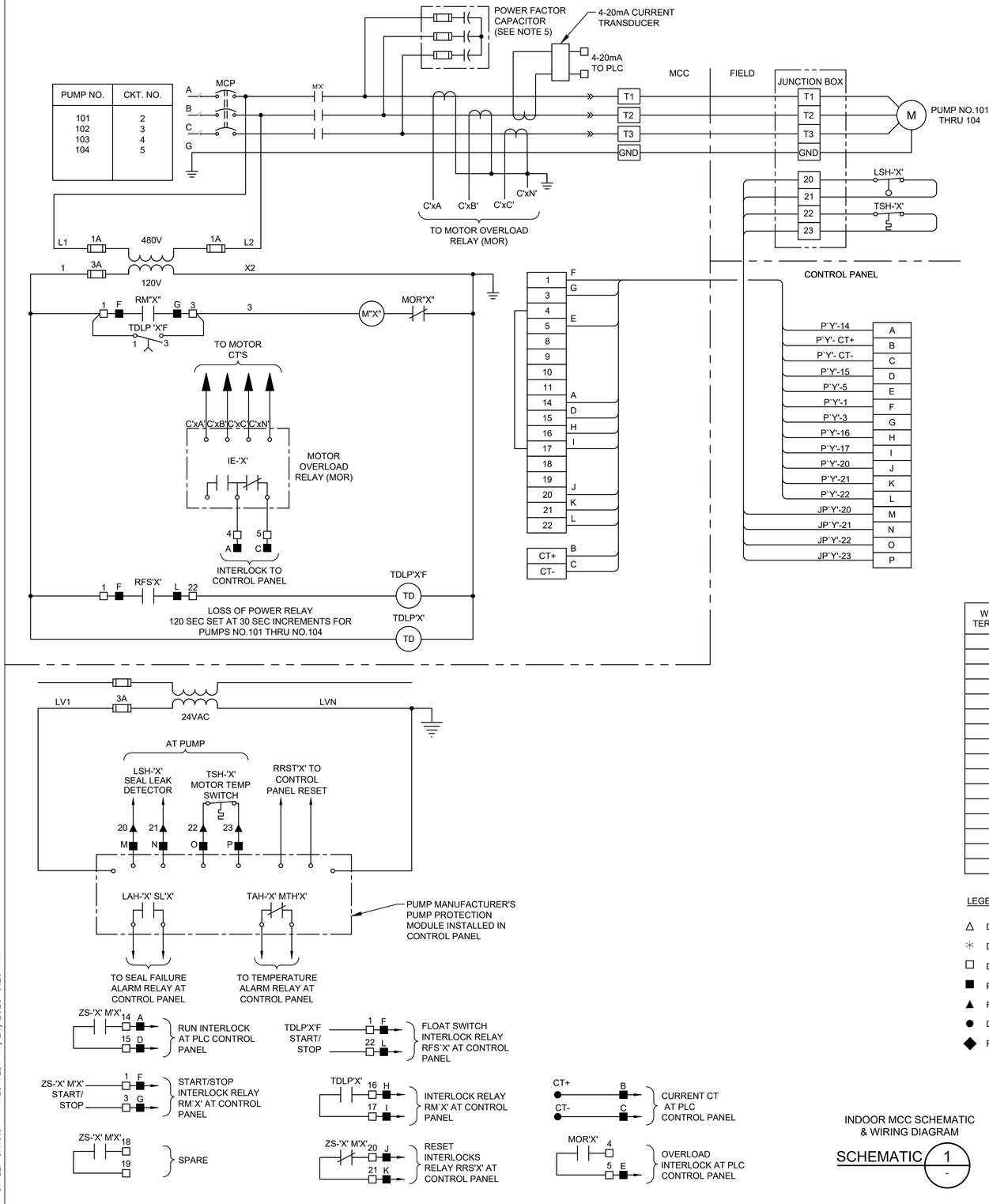

WIRE TAG OR TERMINAL LABEL	PUMP NO.101	PUMP NO.102	PUMP NO.103	PUMP NO.104	FUNCTION
A	3P1	3P2	3P3	3P4	24VDC CONTROL
B	124	224	324	424	4-20mA CURRENT TRANSDUCER
C	125	225	325	425	4-20mA CURRENT TRANSDUCER
D	112	212	312	412	M CONTACT
E	117	217	317	417	PUMP OVERLOAD ALARM
F	109	209	309	409	RUN INTERLOCK
G	110	210	310	410	RUN INTERLOCK
H	102	202	302	402	LOSS OF POWER TIMER
I	103	203	303	403	LOSS OF POWER TIMER
J	126	226	326	426	ALARM RESET INTERLOCK
K	127	227	327	427	ALARM RESET INTERLOCK
L	116	216	316	416	FLOAT SWITCH RUN INTERLOCK
M	120	220	320	420	SEAL LEAK DETECTOR
N	121	221	321	421	SEAL LEAK DETECTOR
O	122	222	322	422	MOTOR TEMPERATURE SWITCH
P	123	223	323	423	MOTOR TEMPERATURE SWITCH

LEGEND

- △ DEVICE OR FIELD TERMINAL LOCATED AT MOTOR
- ✳ DEVICE OR FIELD TERMINAL LOCATED REMOTE
- □ DEVICE OR FIELD TERMINAL LOCATED AT POWER PANEL
- ■ FIELD TERMINAL LOCATED AT CONTROL PANEL
- ▲ REMOTE TERMINAL
- ● DEVICE TERMINAL NO.
- ◆ PC INTERFACE TERMINAL

INDOOR MCC SCHEMATIC & WIRING DIAGRAM

SCHEMATIC 1 -

NOTES:

1. THE 'X' NOTATION IN SCHEMATIC DESIGNATIONS REPRESENTS APPLICABLE PUMP NO. 101, 102, 103, 104.
2. THE 'Y' NOTATION INDICATES MCC CIRCUIT NUMBER.
3. UNLESS OTHERWISE INDICATED, ALL DEVICES WITHOUT FURTHER DESIGNATION ARE LOCATED AT THE MOTOR CONTROL CENTER (MCC).
4. MOTOR OVERLOAD RELAY OUTPUT CONTACT SHOWN IS NORMALLY CLOSED WHEN RELAY IS DE-ENERGIZED. OPEN WHEN ENERGIZED, AND CLOSED WHEN IN ALARM. (VERIFY OPERATION OF RELAY PROVIDED AND ADJUST CONNECTION OF RMOR AUXILIARY RELAYS.)
5. CONTRACTOR TO COORDINATE POWER FACTOR CORRECTION CAPACITOR SIZE WITH PUMP MANUFACTURER.

NO.	DATE	REVISION	APP.

GAI
Gupta & Associates, Inc.
CONSULTING ENGINEERING
Registration No. F-2593
302 Dennis St., Houston, Texas 77006
Tel: 713-636-2936
Fax: 713-636-2987
email: hfarouzan@gaiconsulting.com

ARCADIS
Infrastructure · Water · Environment · Buildings
1330 Post Oak Blvd, Suite 2250
Houston, TX 77056
Tel: 713-953-4800
Fax: 713-977-4620
www.arcadis.com
Texas Registered Engineering Firm F-533
SURVEYED BY: AMANI ENGR.
FB NO. P-6335

STATE OF TEXAS
H. A. FOROUZAN
77748
REGISTERED PROFESSIONAL ENGINEER
11/18/2025

CITY OF HOUSTON

HOUSTON PUBLIC WORKS

LIFT STATION REHABILITATION & RECONSTRUCTION CONSENT DECREE

RED GULLY LIFT STATION MCC SCHEMATIC & WIRING DIAGRAM

E-32

WBS NUMBER	FOR CITY OF HOUSTON USE ONLY
R-000267-0175-4	
DRAWING SCALE	
NONE	
CITY OF HOUSTON PM	
NP NAWARAJ PANTA, P.E.	
SHEET NO. 137 OF 312	

FILE PATH: O:\H8103_Houston Lift Station Removal And Replacement (CMAR)\6 Drawings\Electrical\Working\Red Gully\Red Gully_E-08.dwg
PLOT STYLE: GAI.ctb PLOTTED: 11/21/2025 9:29 PM

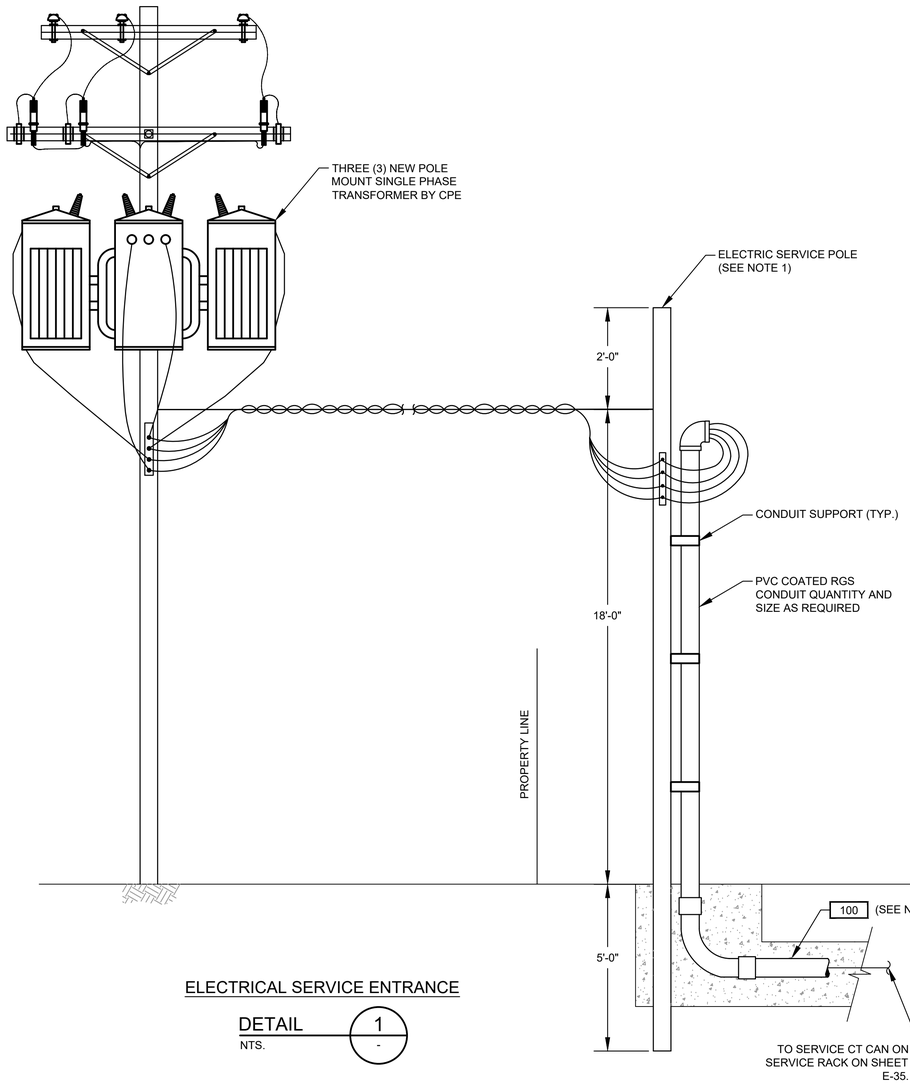

ELECTRICAL SERVICE ENTRANCE

DETAIL 1
NTS. -

NOTES:

1. CONCRETE POLE 25' LONG WITH 7.63" X 7.63" TIP AND 11.69" BUTT, PROVIDED AND INSTALLED BY ELECTRICAL CONTRACTOR.
2. ELECTRICAL SERVICE FEEDER PROVIDED AND INSTALLED BY ELECTRICAL CONTRACTOR. COORDINATE WITH CPE FOR THE REQUIREMENTS OF THE INSTALLATION.

NO.	DATE	REVISION	APP.

GAI
Gupta & Associates, Inc.
CONSULTING ENGINEERING
Registration No. F-2593
302 Dennis St.,
Houston, Texas 77006
Tel: 713-636-2936
Fax: 713-636-2987
email: hforouzan@gaiconsulting.com

ARCADIS
Infrastructure · Water · Environment · Buildings
1330 Post Oak Blvd, Suite 2250
Houston, TX 77056
Tel: 713-953-4800
Fax: 713-977-4620
www.arcadis.com
Texas Registered Engineering Firm F-533

SURVEYED BY: AMANI ENGR.
FB NO. P-6335

STATE OF TEXAS
H. A. FOROUZAN
77748
REGISTERED PROFESSIONAL ENGINEER
11/18/2025

CITY OF HOUSTON
HOUSTON PUBLIC WORKS

LIFT STATION REHABILITATION & RECONSTRUCTION
CONSENT DECREE

RED GULLY LIFT STATION ELECTRICAL SERVICE POLE DETAIL

E-33

WBS NUMBER	FOR CITY OF HOUSTON USE ONLY
R-000267-0175-4	
DRAWING SCALE	
AS SHOWN	
CITY OF HOUSTON PM	
NP NAWARAJ PANTA, P.E.	
SHEET NO. 138 OF 312	

FILE PATH: O:\H8103_Houston Lift Station Removal And Replacement (CMAR)\6 Drawings\Electrical\Working\Red Gully\Red Gully_E-09.dwg
PLOT STYLE: GAI.ctb PLOTTED: 11/21/2025 9:29 PM

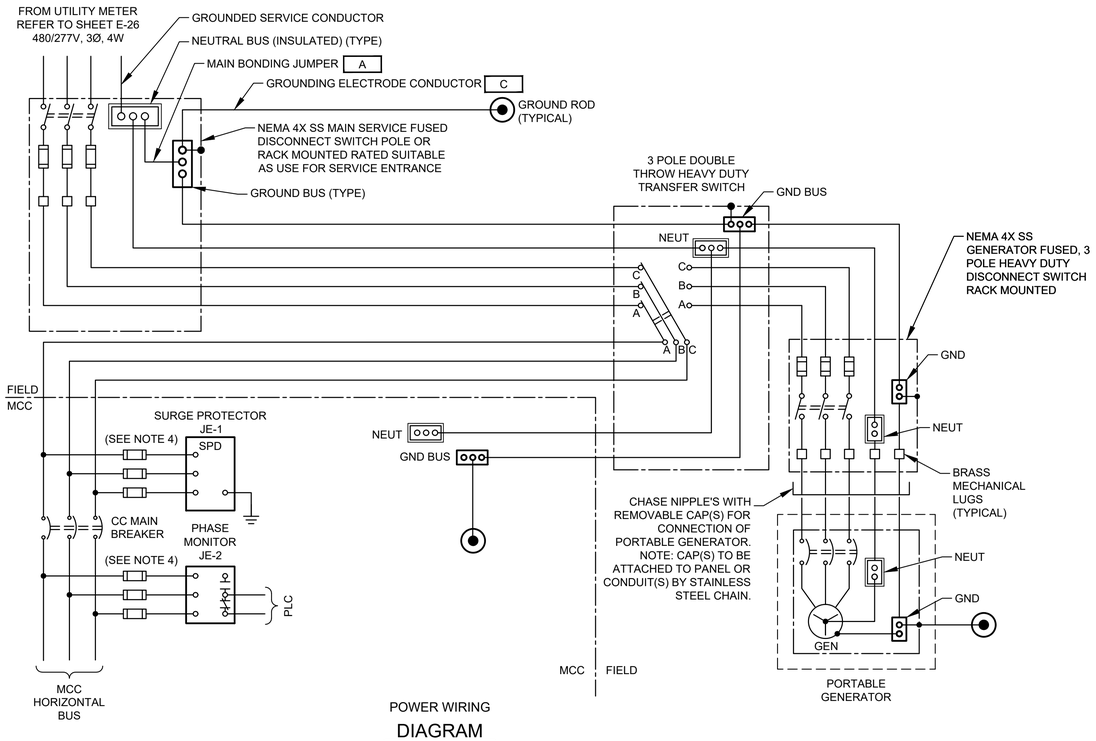

POWER WIRING
DIAGRAM
NTS
(SEE NOTE 3)

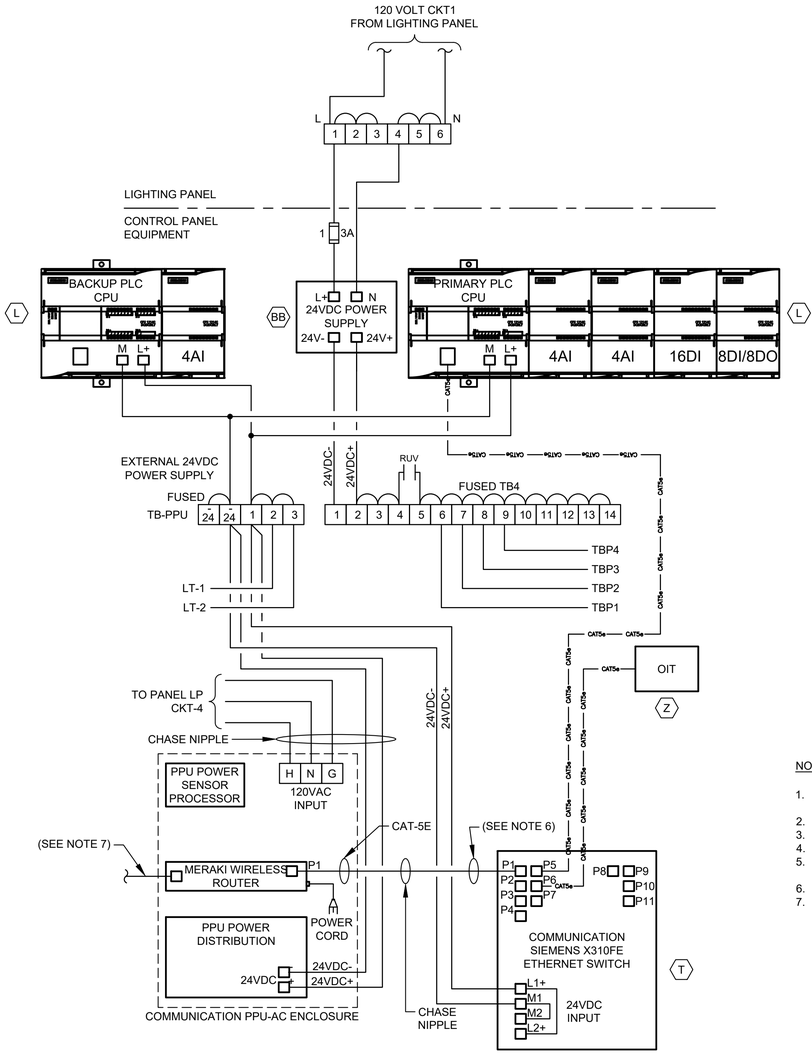

CONTROL POWER & COMMUNICATIONS WIRING
DIAGRAM
NTS
(SEE NOTE 5)

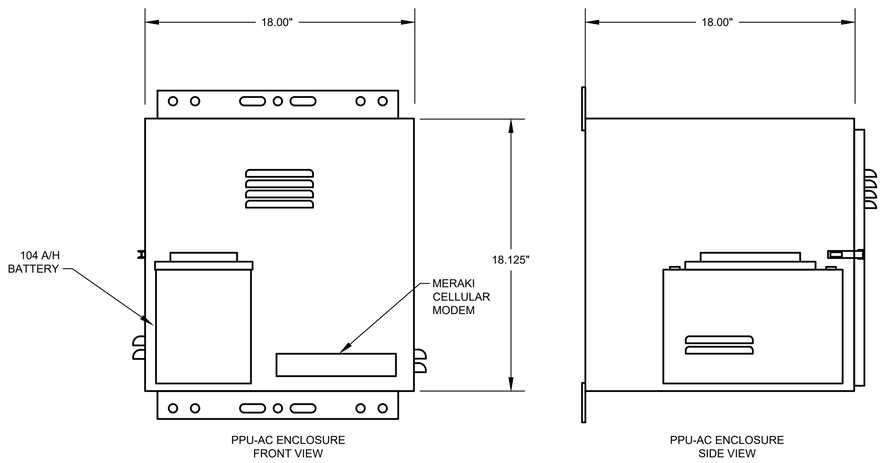

PPU-AC
CONTROL ENCLOSURE
ELEVATION
NTS

NOTES:

1. UNLESS OTHERWISE INDICATED, ALL DEVICES WITHOUT FURTHER DESIGNATION ARE LOCATED AT THE MOTOR CONTROL CENTER (MCC).
2. REFER TO SPEC SECTION 16120 FOR CONDUCTOR COLOR CODE.
3. REFER TO E-26.
4. PROVIDE FUSE SIZE ACCORDING TO MANUFACTURER'S REQUIREMENTS.
5. COMMUNICATION PPU-AC & SCADA SHALL BE PROVIDED BY CONTRACTOR INCLUDING TO RUN CONDUITS & WIRES.
6. ETHERNET CABLE FOR MERAKI CELLULAR ROUTER (P1).
7. POE CABLE TO RADIO.

NO.	DATE	REVISION	APP.

GAI
Gupta & Associates, Inc.
CONSULTING ENGINEERING
Registration No. F-2593
302 Dennis St.,
Houston, Texas 77006
Tel: 713-636-2936
Fax: 713-636-2987
email: hforouzan@gaiconsulting.com

ARCADIS
Infrastructure · Water · Environment · Buildings
1330 Post Oak Blvd, Suite 2250
Houston, TX 77056
Tel: 713-953-4800
Fax: 713-977-4620
www.arcadis.com
Texas Registered Engineering Firm F-533

SURVEYED BY: AMANI ENGR.
FB NO. P-6335

STATE OF TEXAS
H. A. FOROUZAN
77748
REGISTERED PROFESSIONAL ENGINEER
11/18/2025

CITY OF HOUSTON
HOUSTON PUBLIC WORKS

LIFT STATION REHABILITATION & RECONSTRUCTION
CONSENT DECREE

RED GULLY LIFT STATION
MCC INCOMING POWER SCHEMATIC & COMM. DIA.

E-34

WBS NUMBER	FOR CITY OF HOUSTON USE ONLY
R-000267-0175-4	
DRAWING SCALE	
AS SHOWN	
CITY OF HOUSTON PM	
NP NAWARAJ PANTA, P.E.	
SHEET NO. 139 OF 312	

FILE PATH: O:\H8103_Houston Lift Station Removal And Replacement (CMAR)\6 Drawings\Electrical\Working\Red Gully\Red Gully_E-10.dwg
PLOT STYLE: GAI.ctb PLOTTED: 11/21/2025 9:29 PM

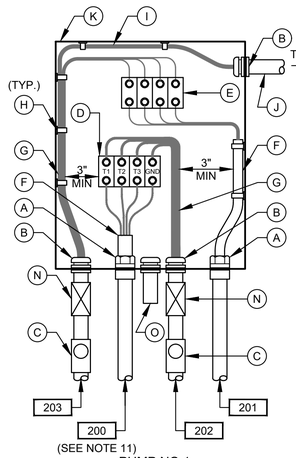

PUMP NO.1
JUNCTION BOX

DETAIL 3
NTS
(SEE NOTE 7)

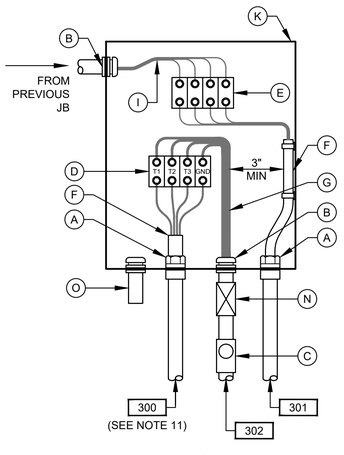

PUMP NO.2
JUNCTION BOX

DETAIL 4
NTS
(SEE NOTE 7)

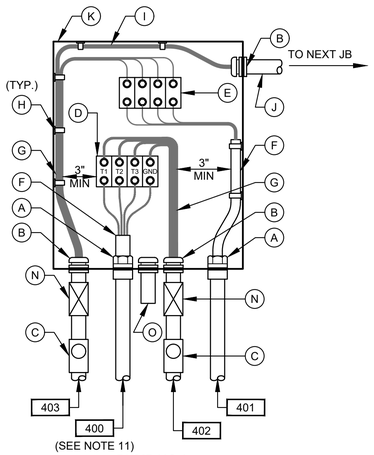

PUMP NO.3
JUNCTION BOX

DETAIL 5
NTS
(SEE NOTE 7)

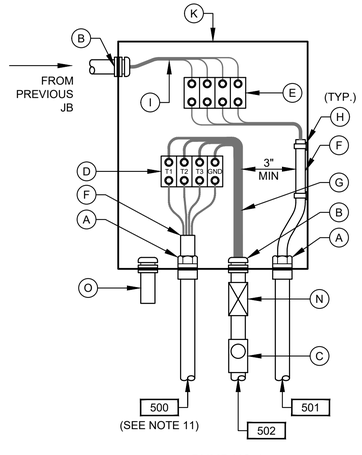

PUMP NO.4
JUNCTION BOX

DETAIL 6
NTS
(SEE NOTE 7)

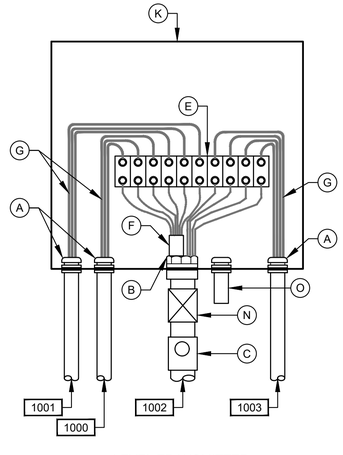

LEVEL TRANSMITTER
JUNCTION BOX

DETAIL 7
NTS
(SEE NOTE 7)

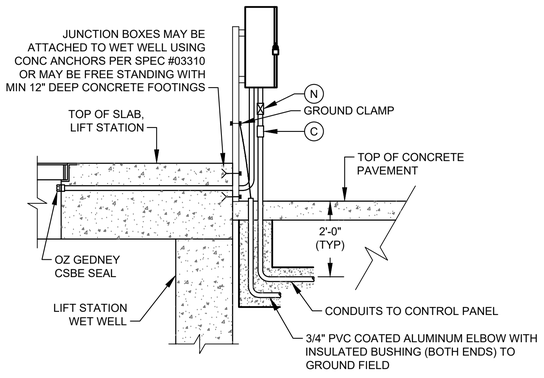

TYP SIDE VIEW FOR DETAIL 1, 1A, 2

(SEE NOTE 10)

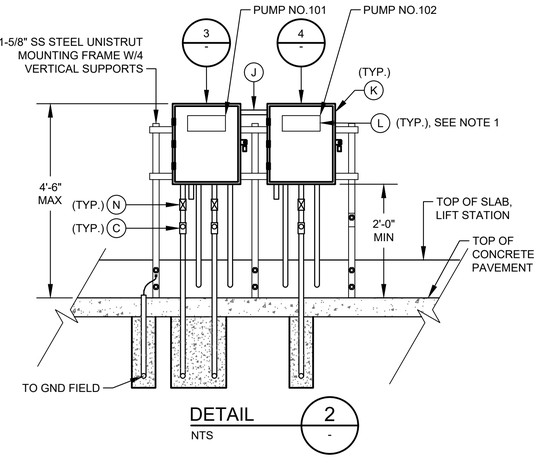

DETAIL 2
NTS

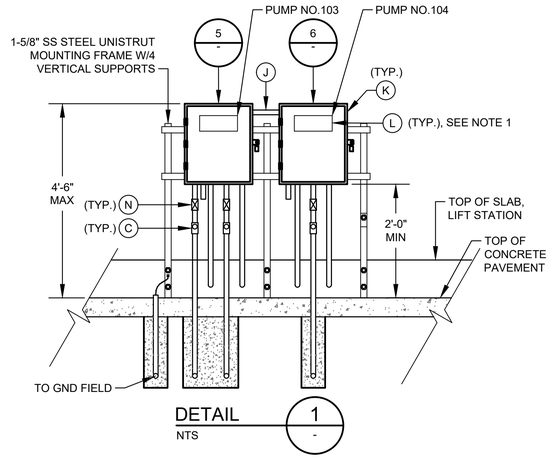

DETAIL 1
NTS

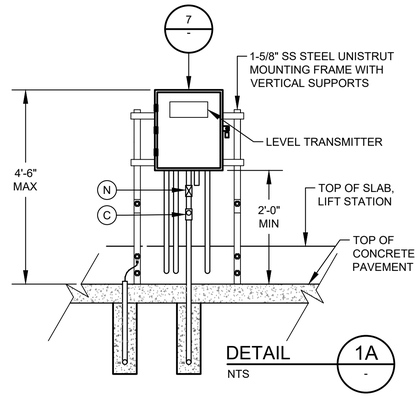

DETAIL 1A
NTS

JUNCTION BOX EQUIPMENT SCHEDULE

- A - OZ GEDNEY CSBE SEAL
- B - WATERTIGHT CONDUIT HUB WITH INSULATED BUSHING
- C - CLASS I, DIV 1, EXPLOSION PROOF SEAL INSTALLED PER NEC DIV 501
- D - POWER TERMINAL BLOCK W/SCREW DOWN BOX LUGS
- E - CONTROL TERM BLOCK W/SCREW DOWN BOX LUGS
- F - MULTI-CONDUCTOR CABLE, REMOVE OUTER JACKET AS SHOWN
- G - WIRING AS SCHEDULED
- H - WIRING HARNESS PERMANENTLY AFFIXED
- I - PUMP CONTROL WIRING FROM PUMPS 2; 2 & 3; 4; OR D2, AS APPLICABLE
- J - 1 1/2" PVC COATED CONDUIT NIPPLE
- K - NEMA 6P STAINLESS STEEL JUNCTION BOX WITH GASKETED FRONT COVER, SINGLE QUARTER TURN, OIL-TIGHT LATCH AND PADLOCKING PROVISIONS, HOFFMAN D-3L16H1206 SS LF OR EQUAL. MINIMUM SIZE: 12"W X 16"H X 6"D
- L - NAMEPLATE, SEE SPECIFICATIONS (SEE NAMEPLATE SCHEDULE)
- M - NOT USED.
- N - EXPANSION FITTING
- O - DRAIN VENT

NOTES:

1. NAMEPLATES SHALL BE MOUNTED TO JUNCTION BOXES USING 316 STAINLESS STEEL HARDWARE.
2. MAINTAIN MINIMUM SEPARATION REQUIRED UNDER NEC ARTICLE 504, BETWEEN INTRINSICALLY SAFE CONTROL WIRING AND NONINTRINSICALLY SAFE MOTOR FEEDER WIRING.
3. UNLESS OTHERWISE NOTED, ALL EXPOSED CONDUITS SHALL BE PVC COATED RIGID GALVANIZED STEEL.
4. UNLESS OTHERWISE NOTED, ALL NUTS, BOLTS, SCREWS WASHERS, ETC SHALL BE TYPE 316 STAINLESS STEEL.
5. ALL UNDERGROUND CONDUITS TO BE ENCASED IN REINFORCED CONCRETE DUCTBANK.
6. PROVIDE ANTI-CORROSIVE SPRAY ON ANY BARE METAL PARTS OR EXPOSED WIRE.
7. SEE WIRING SCHEMATICS FOR TERMINALS AND WIRE NUMBERS.
8. ANY CONDUIT REQUIRING A CSBE SEAL, SHALL BE A MINIMUM SIZE OF 2 1/2" PER CABLE.
9. NOT USED.
10. COORDINATE WITH WASTE WATER OPERATIONS ELECTRICAL ORGANIZATION FOR THE OPENING OF JUNCTION BOXES TO THE SIDE OF WET WELL IF REQUIRED DURING CONSTRUCTION.
11. CONFIRM THE QUANTITY OF THE MANUFACTURER POWER CABLE PRIOR TO INSTALLING THE CONDUITS IN THE TOP CONCRETE SLAB.

NO.	DATE	REVISION	APP.

GAI
Gupta & Associates, Inc.
CONSULTING ENGINEERING
Registration No. F-2593
302 Dennis St.,
Houston, Texas 77006
Tel: 713-636-2936
Fax: 713-636-2967
email: hforouzan@gaiconsulting.com

ARCADIS
Infrastructure · Water · Environment · Buildings
1330 Post Oak Blvd, Suite 2250
Houston, TX 77056
Tel: 713-953-4800
Fax: 713-977-4620
www.arcadis.com
Texas Registered Engineering Firm F-533

SURVEYED BY: AMANI ENGR.
FB NO. P-6335

STATE OF TEXAS
H. A. FOROUZAN
77748
REGISTERED PROFESSIONAL ENGINEER
11/18/2025

CITY OF HOUSTON
HOUSTON PUBLIC WORKS

LIFT STATION REHABILITATION & RECONSTRUCTION CONSENT DECREE

RED GULLY LIFT STATION TYPICAL JUNCTION BOX DETAILS

E-35

WBS NUMBER	FOR CITY OF HOUSTON USE ONLY
R-000267-0175-4	
DRAWING SCALE	
AS SHOWN	
CITY OF HOUSTON PM	
NP NAWARAJ PANTA, P.E.	
SHEET NO. 140 OF 312	

FILE PATH: O:\H8103_Houston Lift Station Removal And Replacement (CMAR)\6 Drawings\Electrical\Working\Red Gully\Red Gully_E-11.dwg
PLOT STYLE: GAI.ctb PLOTTED: 11/21/2025 9:30 PM

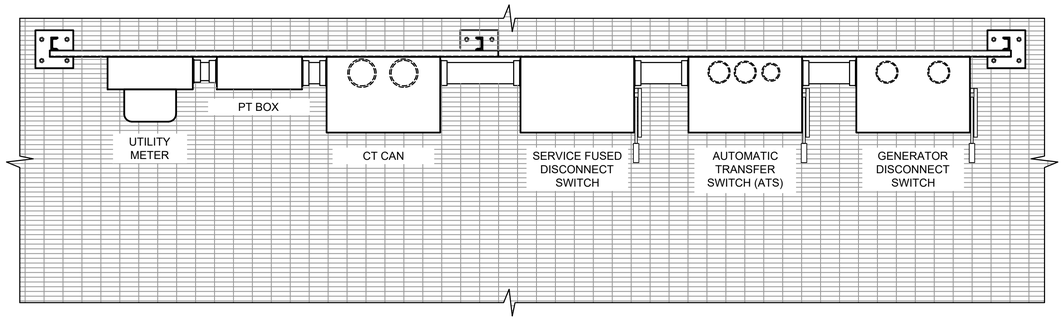

PLAN

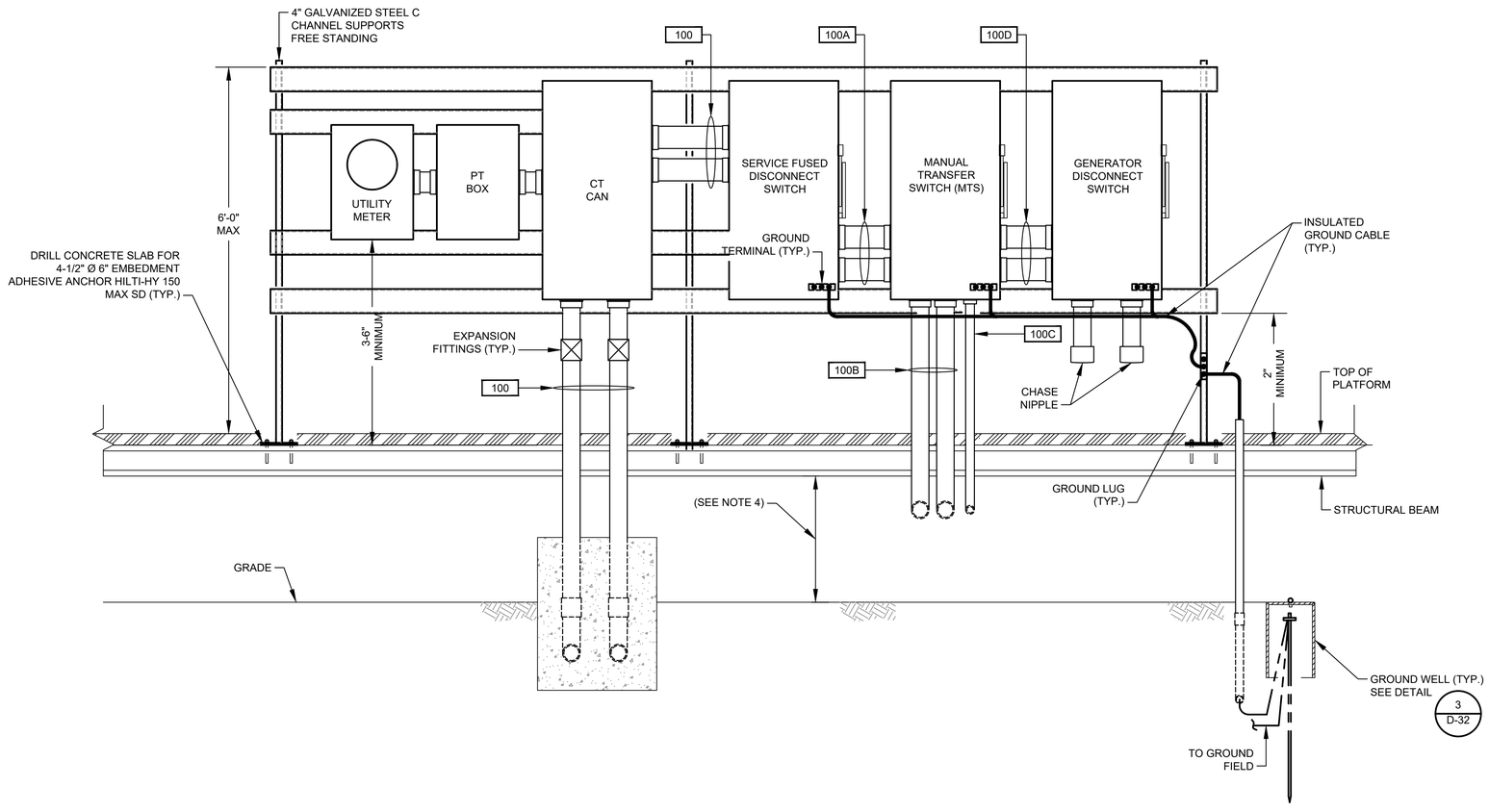

SERVICE MOUNTING RACK

DETAIL 1
NTS. -

NOTES:

1. CHASE NIPPLE(S) WITH REMOVABLE CAP(S) FOR CONNECTION OF PORTABLE GENERATOR. NOTE: CAP(S) TO BE ATTACHED TO PANEL OR CONDUIT(S) BY STAINLESS STEEL CHAIN.
2. T.O.C DEFINED AS TOP OF PAVEMENT OR TOP OF PANEL ENCLOSURE PEDESTAL WHICHEVER IS HIGHER.
3. PROVIDE CENTER BOLLARD WHEN SPACE BETWEEN OUTSIDE BOLLARDS IS GREATER THEN 4'-0".
4. SEE STRUCTURAL DRAWINGS FOR ELEVATION.

NO.	DATE	REVISION	APP.

GAI
Gupta & Associates, Inc.
CONSULTING ENGINEERING
Registration No. F-2593
302 Dennis St.,
Houston, Texas 77006
Tel: 713-636-2936
Fax: 713-636-2987
email: hforouzan@gaiconsulting.com

ARCADIS
Infrastructure · Water · Environment · Buildings
1330 Post Oak Blvd, Suite 2250
Houston, TX 77056
Tel: 713-953-4800
Fax: 713-977-4620
www.arcadis.com
Texas Registered Engineering Firm F-533
SURVEYED BY: AMANI ENGR.
FB NO. P-6335

STATE OF TEXAS
H. A. FOROUZAN
77748
REGISTERED PROFESSIONAL ENGINEER
11/18/2025

CITY OF HOUSTON
HOUSTON PUBLIC WORKS

LIFT STATION REHABILITATION & RECONSTRUCTION CONSENT DECREE

RED GULLY LIFT STATION ELECTRICAL SERVICE RACK DETAILS

E-36

WBS NUMBER	FOR CITY OF HOUSTON USE ONLY
R-000267-0175-4	
DRAWING SCALE	
AS SHOWN	
CITY OF HOUSTON PM	
NP NAWARAJ PANTA, P.E.	
SHEET NO. 141 OF 312	

FILE PATH: O:\H8103_Houston Lift Station Removal And Replacement (CMAR)\6 Drawings\Electrical\Working\Red Gully\Red Gully_E-12.dwg
PLOT STYLE: GAI.ctb PLOTTED: 11/21/2025 9:30 PM

HMI

CONTROL PANEL PLC

CONTROL BUILDING

INFLUENT PUMP NO.101

INFLUENT PUMP NO.102

INFLUENT PUMP NO.103

INFLUENT PUMP NO.104

SEAL FAIL ALARM | MOTOR OVERLOAD ALARM | MOTOR CURRENT | HIGH TEMP ALARM | IN HAND | IN AUTO | ON/OFF | START/ STOP

MA 1 | MO 1 | II 1 | TH 1 | HI 1 | IA 1 | YFS 1 | YCS 1

MA 2 | MO 2 | II 2 | TH 2 | HI 2 | IA 2 | YFS 2 | YCS 2

MA 3 | MO 3 | II 3 | TH 3 | HI 3 | IA 3 | YFS 3 | YCS 3

MA 4 | MO 4 | II 4 | TH 4 | HI 4 | IA 4 | YFS 4 | YCS 4

480V

INFLUENT PUMPS MCC

INFLUENT PUMP NO.101 H/O/A RUN

INFLUENT PUMP NO.102 H/O/A RUN

INFLUENT PUMP NO.103 H/O/A RUN

INFLUENT PUMP NO.104 H/O/A RUN

PRIMARY PLC | BACKUP PLC

INFLUENT PUMP CONTROL PANEL

ALARMS RESET

OIT

TO SHEET I-27

I-27

I-27

WET WELL

LT 1

LE 1

LT 2

LE 2

FS2 HIGH-HIGH LEVEL FLOAT SWITCH

FS1 HIGH LEVEL FLOAT SWITCH

LSH 1A | TSH 1A | M

LSH 2A | TSH 2A | M

LSH 3A | TSH 3A | M

LSH 4A | TSH 4A | M

12" 2" ARV 12" CHKVLV 12" PLV 16"

12" 2" ARV 12" CHKVLV 12" PLV 12" X 16"

12" 2" ARV 12" CHKVLV 12" PLV 16"

12" 2" ARV 12" CHKVLV 12" PLV 16" 16" ARV INFLUENT DISCHARGE

NO.	DATE	REVISION	APP.

GAI
Gupta & Associates, Inc.
CONSULTING ENGINEERING
Registration No. F-2593
302 Dennis St.,
Houston, Texas 77006
Tel: 713-636-2936
Fax: 713-636-2987
email: hforouzan@gaiconsulting.com

ARCADIS
Infrastructure · Water · Environment · Buildings
1330 Post Oak Blvd, Suite 2250
Houston, TX 77056
Tel: 713-953-4800
Fax: 713-977-4620
www.arcadis.com
Texas Registered Engineering Firm F-533

SURVEYED BY: AMANI ENGR.
FB NO. P-6335

STATE OF TEXAS
H. A. FOROUZAN
77748
REGISTERED PROFESSIONAL ENGINEER
11/18/2025

CITY OF HOUSTON

HOUSTON PUBLIC WORKS

LIFT STATION REHABILITATION & RECONSTRUCTION CONSENT DECREE

RED GULLY LIFT STATION PROCESS & INSTRUMENTATION DIAGRAM-I

I-26

WBS NUMBER	FOR CITY OF HOUSTON USE ONLY
R-000267-0175-4	
DRAWING SCALE	
NONE	
CITY OF HOUSTON PM	
NP NAWARAJ PANTA, P.E.	
SHEET NO. 142 OF 312	

FILE PATH: O:\H8103_Houston Lift Station Removal And Replacement (CMAR)\6 Drawings\Instrumentation And Control\Working\Red Gully\Red Gully_I-01.dwg
PLOT STYLE: COH.ctb PLOTTED: 11/21/2025 10:22 PM

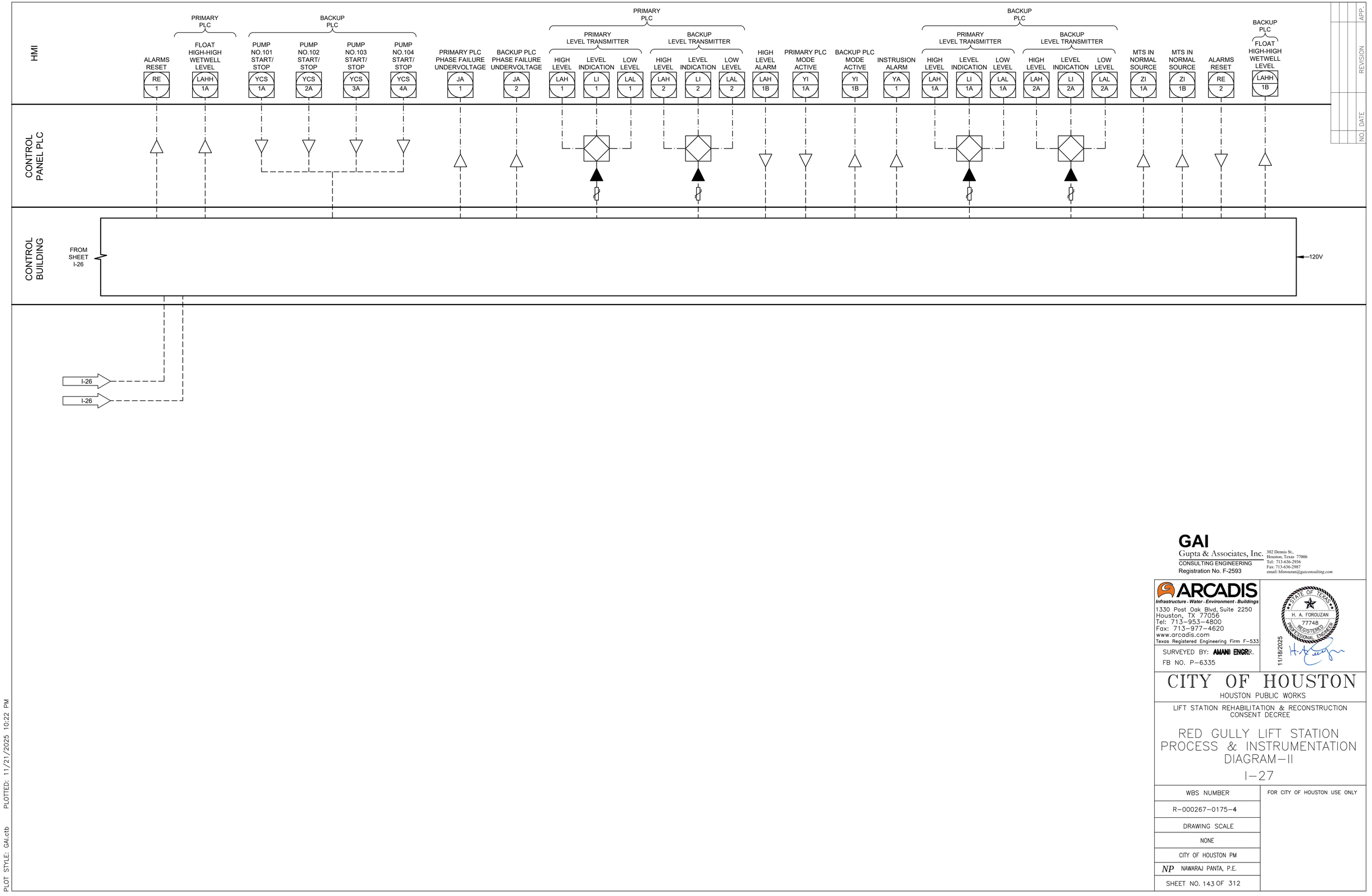

FILE PATH: O:\H8103_Houston Lift Station Removal And Replacement (CMAR)\6 Drawings\Instrumentation And Control\Working\Red Gully\Red Gully_I-02.dwg
PLOT STYLE: GAI.ctb PLOTTED: 11/21/2025 10:22 PM

NO.	DATE	REVISION	APP.

GAI
Gupta & Associates, Inc.
CONSULTING ENGINEERING
Registration No. F-2593
302 Dennis St.,
Houston, Texas 77006
Tel: 713-636-2936
Fax: 713-636-2987
email: hforouzan@gaiconsulting.com

ARCADIS
Infrastructure · Water · Environment · Buildings
1330 Post Oak Blvd, Suite 2250
Houston, TX 77056
Tel: 713-953-4800
Fax: 713-977-4620
www.arcadis.com
Texas Registered Engineering Firm F-533

SURVEYED BY: AMANI ENGR.
FB NO. P-6335

STATE OF TEXAS
H. A. FOROUZAN
77748
REGISTERED PROFESSIONAL ENGINEER
11/18/2025

CITY OF HOUSTON
HOUSTON PUBLIC WORKS

LIFT STATION REHABILITATION & RECONSTRUCTION
CONSENT DECREE

RED GULLY LIFT STATION
PROCESS & INSTRUMENTATION DIAGRAM-II

I-27

WBS NUMBER	FOR CITY OF HOUSTON USE ONLY
R-000267-0175-4	
DRAWING SCALE	
NONE	
CITY OF HOUSTON PM	
NP NAWARAJ PANTA, P.E.	
SHEET NO. 143 OF 312	

EQUIPMENT AND DEVICE SCHEDULE

ITEM	QUANTITY	DESCRIPTION
A	1	SINGLE CHANNEL INTRINSICALLY SAFE RELAY
B	2	ANALOG SIGNAL ISOLATOR
C	4	PUMP PROTECTION MODULE
D	*	NOT USED
E	4	HAND-OFF-AUTO SWITCH, 3 POSITION, HEAVY-DUTY OIL TIGHT WITH 2 SETS OF CONTACT BLOCKS (PUMP CONTROL)
F	4	INDICATING LIGHT, HEAVY DUTY, OILTIGHT, RED, 24 VDC, LED, WITH "RUN" LEGEND
G	*	NOT USED.
H	1	SWITCH FOR CABINET LIGHT, 120V, 20A, SPST
I	2	DUPLEX RECEPTACLE, 120V, 20A, 2 WIRE, GROUNDED, GFCI TYPE
J	1	24" LED STRIP LIGHT 120V SUITABLE FOR ZERO DEGREE OPERATION
K	*	NAMEPLATES, SEE SPECIFICATIONS (SEE NAMEPLATE SCHEDULE)
L	2	PROGRAMMABLE LOGIC CONTROLLER WITH EXPANSION UNIT
M	*	CONTROL RELAY 24VDC RELAY WITH THREE FORM C CONTACTS AND 11 PIN SOCKET BASE
N	-	NOT USED
O	-	NOT USED
P	1	NEMA 12 GASKETED STEEL ENCLOSURES WITHOUT VENTS 72" H X 20" D X 60" W
Q	*	TERMINAL BLOCK
R	1	WIRE DUCT 2" WIDE X 2" DEEP MINIMUM
S	1	GROUND BUS
T	1	COMMUNICATION ETHERNET SWITCH
U	9	CARTRIDGE
V	1	PUSHBUTTON, BLACK WITH RESET LEGEND
W	-	NOT USED
X	*	FUSED TERMINAL BLOCKS
Y	1	POWER SURGE PROTECTOR - CONTROL POWER
Z	1	PROGRAMMING SCREEN (OIT)
AA	*	120VAC SYSTEM FUSES
BB	1	120VAC - 24VDC POWER SUPPLY, 5A
CC	*	NOT USED
DD	2	INDICATING LIGHT, HEAVY DUTY, OILTIGHT, GREEN, 24VDC, LED WITH "BACKUP PLC" & "PRIMARY PLC" LEGEND
EE	2	ANALOG I/O SURGE SUPPRESSOR
FF	-	NOT USED

* - AS SCHEDULED

NAMEPLATE SCHEDULE

DESIGNATION	ENGRAVED
N1	PUMP STATION DESIGNATION
N2	PUMP NO. 1
N3	PUMP NO. 2
N4	PUMP NO. 3
N5	PUMP NO. 4
N6	NOT USED.
N7	NOT USED.
N8	NOT USED.
N9	NOT USED.
N10	PROGRAMMING SCREEN
N11	NOT USED.
N12	PRIMARY PLC
N13	BACKUP PLC
N14	MOTOR DATA

HORSEPOWER (OUTPUT) ----------
RPM AT FULL LOAD ----------
TIME RATING ----------
FREQUENCY ----------
NUMBER OF PHASES ----------
MODEL NUMBER ----------
RATED VOLTAGE ----------
SERVICE FACTOR ----------
FULL LOAD AMPS ----------
INSULATION CLASS ----------
NEMA DESIGN LETTER ----------
TEMPERATURE RISE ----------
NEMA FRAME SIZE ----------
DATE OF MANUFACTURE ----------
THERMO PROTECTION (IF REQUIRED) --
MOISTURE PROTECTION (IF REQUIRED)-

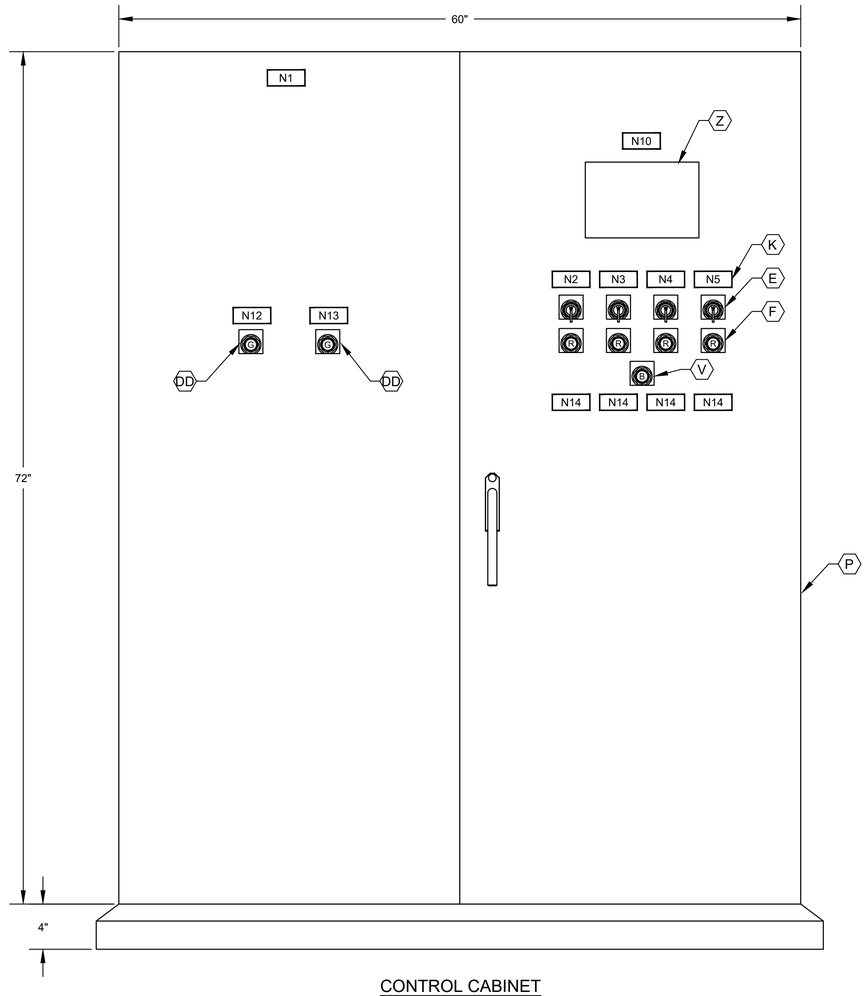

CONTROL CABINET
FRONT DOOR ELEVATION

NOTES:

1. NAMEPLATES SHALL BE MOUNTED TO PANELS USING STAINLESS STEEL HARDWARE.
2. REFER SPECIFICATIONS FOR ALL PANEL COMPONENTS.

NO.	DATE	REVISION	APP.

GAI
Gupta & Associates, Inc.
CONSULTING ENGINEERING
Registration No. F-2593
302 Dennis St.,
Houston, Texas 77006
Tel: 713-636-2936
Fax: 713-636-2987
email: hforouzan@gaiconsulting.com

ARCADIS
Infrastructure · Water · Environment · Buildings
1330 Post Oak Blvd, Suite 2250
Houston, TX 77056
Tel: 713-953-4800
Fax: 713-977-4620
www.arcadis.com
Texas Registered Engineering Firm F-533

SURVEYED BY: AMANI ENGR.
FB NO. P-6335

STATE OF TEXAS
H. A. FOROUZAN
77748
REGISTERED PROFESSIONAL ENGINEER
11/18/2025

CITY OF HOUSTON
HOUSTON PUBLIC WORKS

LIFT STATION REHABILITATION & RECONSTRUCTION
CONSENT DECREE

RED GULLY LIFT STATION CONTROL CABINET EQUIPMENT LAYOUT & SCHEDULE

I-28

WBS NUMBER	FOR CITY OF HOUSTON USE ONLY
R-000267-0175-4	
DRAWING SCALE	
AS NOTED	
CITY OF HOUSTON PM	
NP NAWARAJ PANTA, P.E.	
SHEET NO. 144 OF 312	

FILE PATH: O:\H8103_Houston Lift Station Removal And Replacement (CMAR)\6 Drawings\Instrumentation And Control\Working\Red Gully\Red Gully_I-03.dwg
PLOT STYLE: GAI.ctb PLOTTED: 11/21/2025 10:22 PM

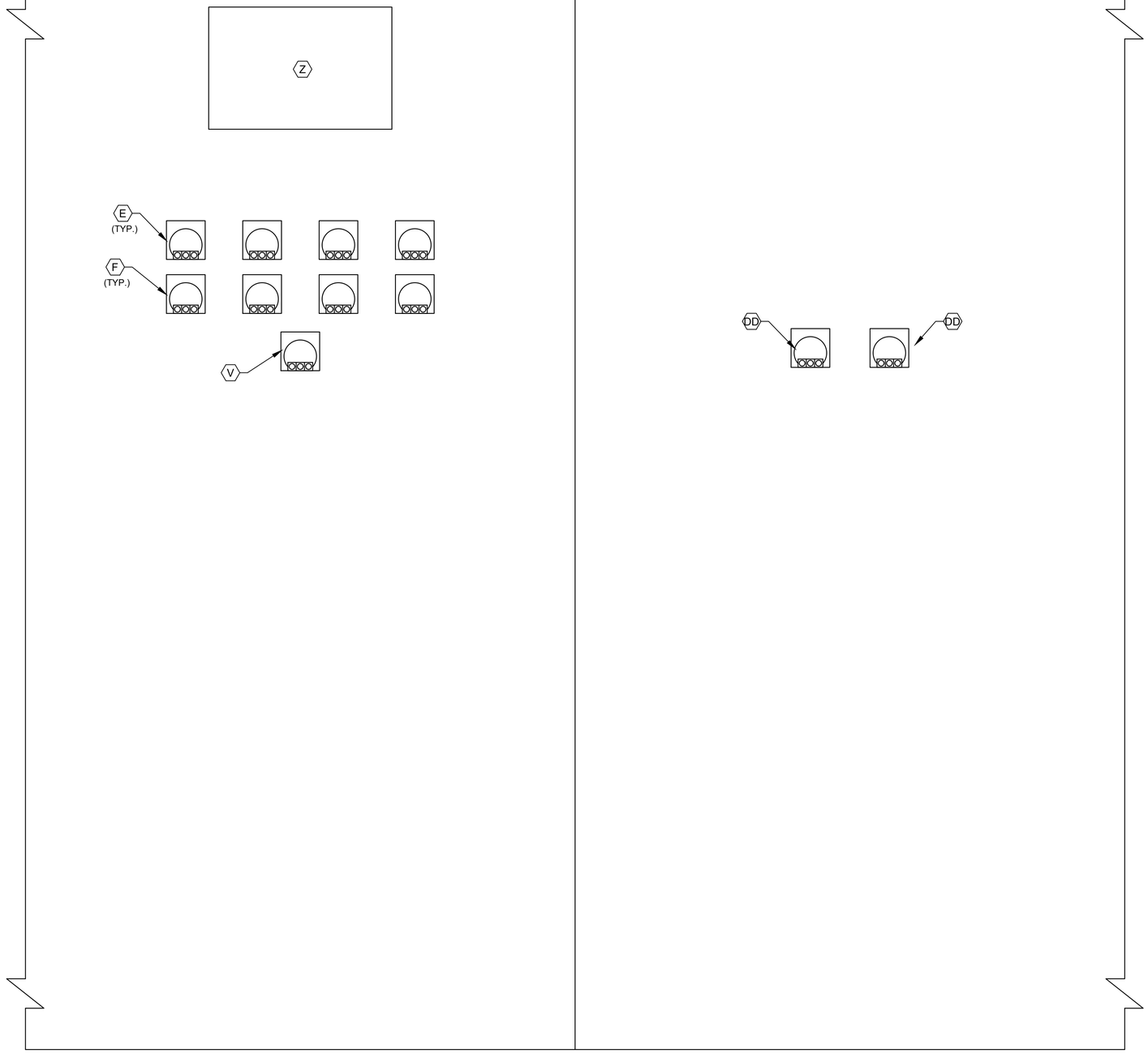

CONTROL CABINET
BACK DOOR ELEVATION

NOTES:

1. SEE SHEET I-28 FOR EQUIPMENT SCHEDULE.

NO.	DATE	REVISION	APP.

GAI
Gupta & Associates, Inc.
CONSULTING ENGINEERING
Registration No. F-2593
302 Dennis St.,
Houston, Texas 77006
Tel: 713-636-2936
Fax: 713-636-2987
email: hforouzan@gaiconsulting.com

ARCADIS
Infrastructure · Water · Environment · Buildings
1330 Post Oak Blvd, Suite 2250
Houston, TX 77056
Tel: 713-953-4800
Fax: 713-977-4620
www.arcadis.com
Texas Registered Engineering Firm F-533

SURVEYED BY: AMANI ENGR.
FB NO. P-6335

STATE OF TEXAS
H. A. FOROUZAN
77748
REGISTERED
PROFESSIONAL ENGINEER
11/18/2025

CITY OF HOUSTON
HOUSTON PUBLIC WORKS

LIFT STATION REHABILITATION & RECONSTRUCTION
CONSENT DECREE

RED GULLY LIFT STATION
CONTROL CABINET BACK DOOR ELEVATION
I-29

WBS NUMBER	FOR CITY OF HOUSTON USE ONLY
R-000267-0175-4	
DRAWING SCALE	
AS NOTED	
CITY OF HOUSTON PM	
NP NAWARAJ PANTA, P.E.	
SHEET NO. 145 OF 312	

FILE PATH: O:\H8103_Houston Lift Station Removal And Replacement (CMAR)\6 Drawings\Instrumentation And Control\Working\Red Gully\Red Gully_I-04.dwg
PLOT STYLE: GAI.ctb PLOTTED: 11/21/2025 10:22 PM

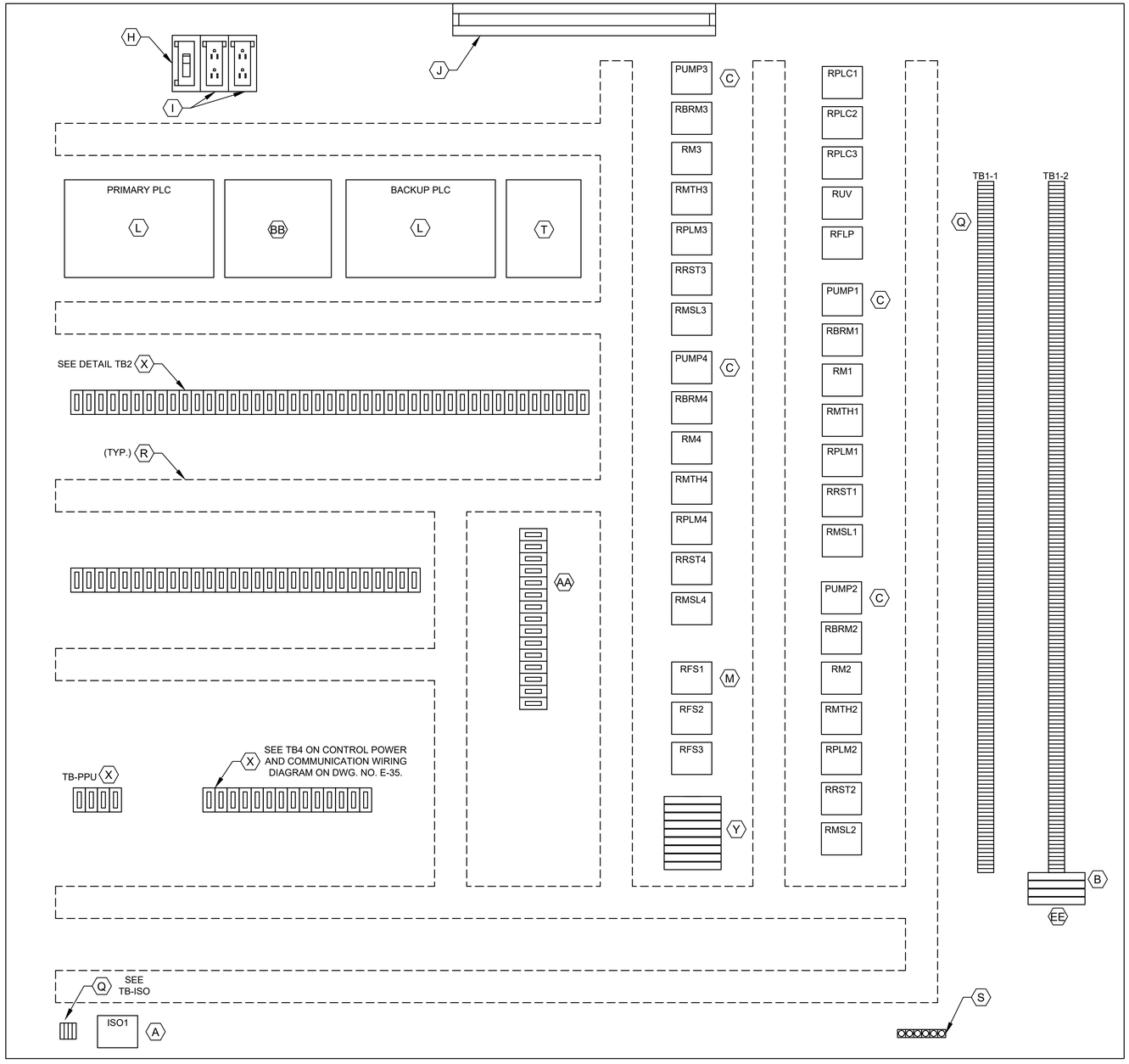

CONTROL PANEL ELEVATION

LEGEND	
TAG	DESCRIPTION
RMTH	MOTOR HIGH TEMPERATURE ALARM RELAY
RPLMP	PLC PUMP RUN RELAY
RRST	PUMP RESET AUX RELAY
RPLC	PLC MODE AUX RELAY
RM	PUMP RUN AUX RELAY
RUV	UNDER VOLTAGE RELAY
RBRM	BACKUP SYSTEM RUN RELAY
ISO	INTRINSICALLY SAFE RELAY
RFS	PUMP RUN FLOAT SWITCH RELAY
RMSL	MOTOR SEAL LEAK ALARM RELAY
RFLP	FLOAT LOCKOUT PUMP RELAY

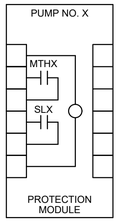

PUMP PROTECTION MODULE DETAIL, ITEM C

NOTE: REPLACE "X" WITH APPROPRIATE PUMP NO.

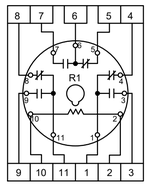

RELAY DETAIL ITEM M

DETAIL TB1-1
L1A
L1N
SPARE
3
3N
SPARE
49
50
51
52
53
54
1004
1
24V-
24V-
SPARE
1002
2
11
1001
1001A
12
1003
1003A
34
3N
19
20
102
103
3P1
109
110
112
116
117
120
121
122
123
124
125
126
127
SPARE
SPARE
202
203
3P2
209
210
212
216
217
220
221
222
223
224
225
226
227

DETAIL TB1-2
SPARE
SPARE
302
303
3P3
309
310
312
316
317
320
321
322
323
324
325
326
327
SPARE
SPARE
402
403
3P4
409
410
412
416
417
420
421
422
423
424
425
426
427

DETAIL TB2
36A
37A
50
52
54
52A
52A
54A
L+
M
35B
38B
41B
44B
SPARE
SPARE
47B
50B
53B
13B
13AB
B
L+
M
14B
14AB
14GB
119
SPARE
L+
M
13
13A
13G
14
14A
14G
1M
2M
1L
3
30
32
34
37
38
41
33B
45
18B
SPARE

DETAIL TB2
100
112
113
114
115
117
118
119
120
121
SPARE
200
212
213
214
215
217
218
219
220
221
SPARE
300
312
313
314
315
317
318
319
320
321
SPARE
SPARE
400
412
413
414
415
417
418
419
420
421

DETAIL TB-ISO
1500
1501
1503
1504

NOTES:

1. SEE SHEET I-28 FOR EQUIPMENT SCHEDULE.

GAI
Gupta & Associates, Inc.
CONSULTING ENGINEERING
Registration No. F-2593
302 Dennis St.,
Houston, Texas 77006
Tel: 713-636-2936
Fax: 713-636-2987
email: hforouzan@gaiconsulting.com

ARCADIS
Infrastructure · Water · Environment · Buildings
1330 Post Oak Blvd, Suite 2250
Houston, TX 77056
Tel: 713-953-4800
Fax: 713-977-4620
www.arcadis.com
Texas Registered Engineering Firm F-533

SURVEYED BY: AMANI ENGR.
FB NO. P-6335

STATE OF TEXAS
H. A. FOROUZAN
77748
REGISTERED PROFESSIONAL ENGINEER
11/18/2025

CITY OF HOUSTON

HOUSTON PUBLIC WORKS

LIFT STATION REHABILITATION & RECONSTRUCTION CONSENT DECREE

RED GULLY LIFT STATION CONTROL CABINET EQUIPMENT LAYOUT

I-30

WBS NUMBER	FOR CITY OF HOUSTON USE ONLY
R-000267-0175-4	
DRAWING SCALE	
AS NOTED	
CITY OF HOUSTON PM	
NP NAWARAJ PANTA, P.E.	
SHEET NO. 146 OF 312	

NO.	DATE	REVISION	APP.

FILE PATH: O:\H8103_Houston Lift Station Removal And Replacement (CMAR)\6 Drawings\Instrumentation And Control\Working\Red Gully\Red Gully_I-05.dwg
PLOT STYLE: GAI.ctb PLOTTED: 11/21/2025 10:23 PM

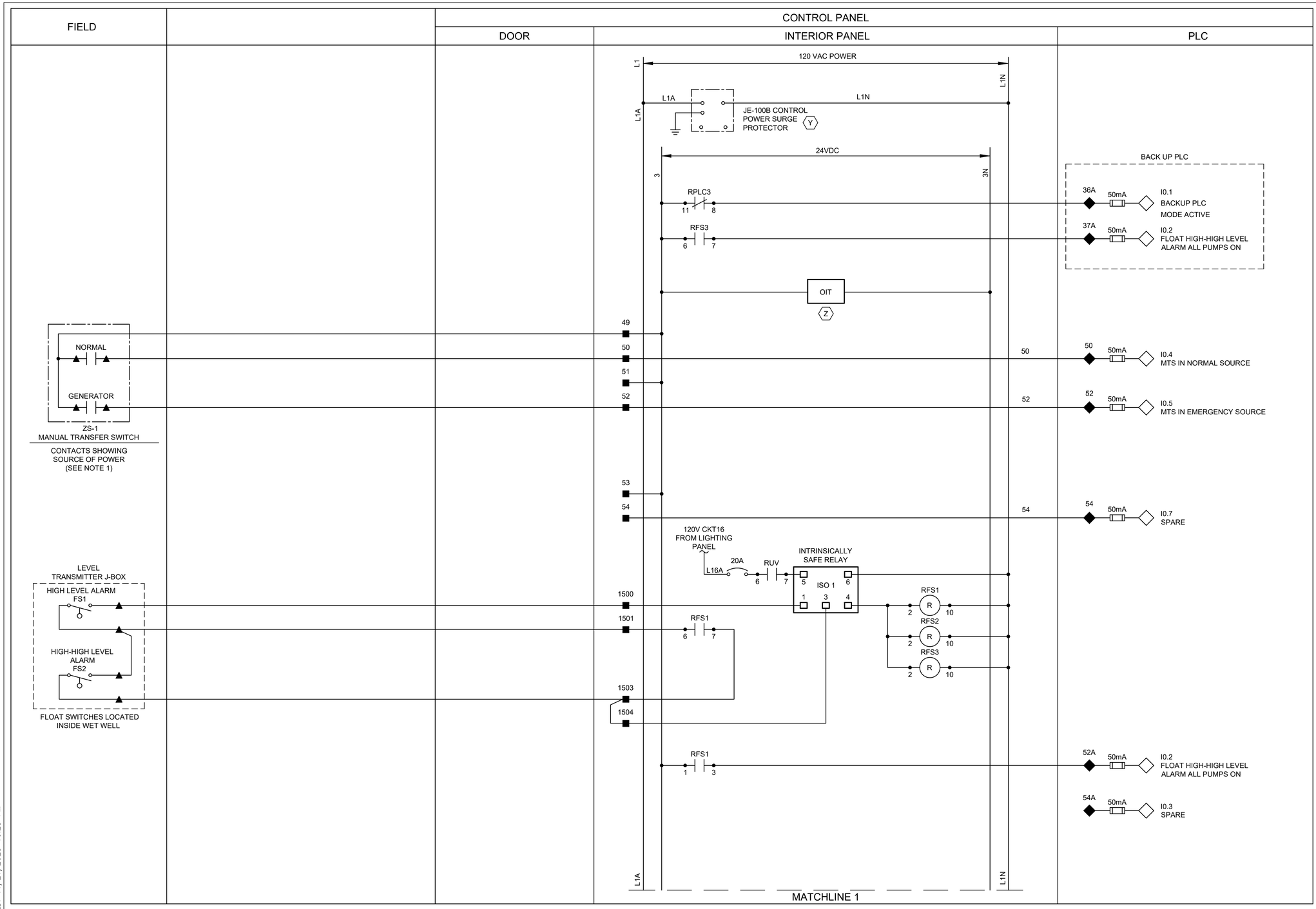

LEGEND

- △ DEVICE OR FIELD TERMINAL LOCATED AT MOTOR
- ✳ DEVICE OR FIELD TERMINAL LOCATED REMOTE
- □ DEVICE OR FIELD TERMINAL LOCATED AT MCC/POWER PANEL
- ■ FIELD TERMINAL LOCATED AT CONTROL PANEL
- ▲ REMOTE TERMINAL
- ● DEVICE TERMINAL NO.
- ◆ PLC INTERFACE TERMINAL

NOTES:

1. PROVIDE MANUAL TRANSFER SWITCH DRY CONTACT.
2. ALL FLOAT CONTROL CIRCUIT WIRES COLOR SHALL BE YELLOW.

NO.	DATE	REVISION	APP.

GAI
Gupta & Associates, Inc.
CONSULTING ENGINEERING
Registration No. F-2593
302 Dennis St.,
Houston, Texas 77006
Tel: 713-636-2936
Fax: 713-636-2987
email: hforouzan@gaiconsulting.com

ARCADIS
Infrastructure · Water · Environment · Buildings
1330 Post Oak Blvd, Suite 2250
Houston, TX 77056
Tel: 713-953-4800
Fax: 713-977-4620
www.arcadis.com
Texas Registered Engineering Firm F-533

SURVEYED BY: AMANI ENGR.
FB NO. P-6335

STATE OF TEXAS
H. A. FOROUZAN
77748
REGISTERED
PROFESSIONAL ENGINEER
11/18/2025

CITY OF HOUSTON
HOUSTON PUBLIC WORKS

LIFT STATION REHABILITATION & RECONSTRUCTION
CONSENT DECREE

RED GULLY LIFT STATION
CONTROL WIRING DIAGRAM-I

I-31

WBS NUMBER	FOR CITY OF HOUSTON USE ONLY
R-000267-0175-4	
DRAWING SCALE	
NONE	
CITY OF HOUSTON PM	
NP NAWARAJ PANTA, P.E.	
SHEET NO. 147 OF 312	

FILE PATH: O:\H8103_Houston Lift Station Removal And Replacement (CMAR)\6 Drawings\Instrumentation And Control\Working\Red Gully\Red Gully_I-06.dwg
PLOT STYLE: GAI.ctb PLOTTED: 11/21/2025 10:23 PM

FIELD	MOTOR CONTROL CENTER (INDOOR)	CONTROL PANEL	
		DOOR	INTERIOR PANEL

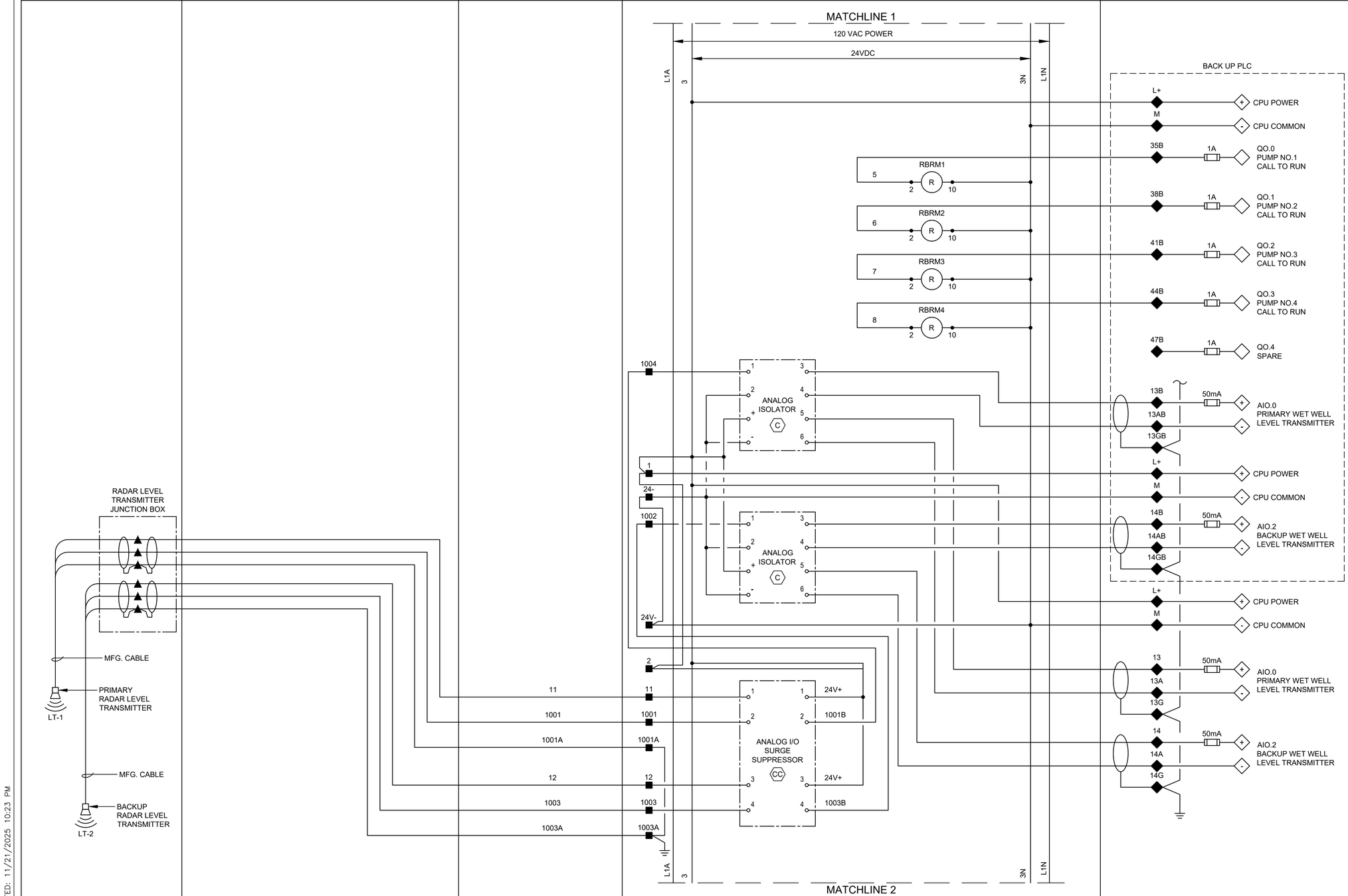

LEGEND

- △ DEVICE OR FIELD TERMINAL LOCATED AT MOTOR
- ✳ DEVICE OR FIELD TERMINAL LOCATED REMOTE
- □ DEVICE OR FIELD TERMINAL LOCATED AT MCC/POWER PANEL
- ■ FIELD TERMINAL LOCATED AT CONTROL PANEL
- ▲ REMOTE TERMINAL
- ● DEVICE TERMINAL NO.
- ◆ PLC INTERFACE TERMINAL

NO.	DATE	REVISION	APP.

GAI
Gupta & Associates, Inc.
CONSULTING ENGINEERING
Registration No. F-2593
302 Dennis St.,
Houston, Texas 77006
Tel: 713-636-2936
Fax: 713-636-2987
email: hforouzan@gaiconsulting.com

ARCADIS
Infrastructure · Water · Environment · Buildings
1330 Post Oak Blvd, Suite 2250
Houston, TX 77056
Tel: 713-953-4800
Fax: 713-977-4620
www.arcadis.com
Texas Registered Engineering Firm F-533

STATE OF TEXAS
H. A. FOROUZAN
77748
REGISTERED
PROFESSIONAL ENGINEER
11/18/2025

SURVEYED BY: AMANI ENGR.
FB NO. P-6335

CITY OF HOUSTON

HOUSTON PUBLIC WORKS

LIFT STATION REHABILITATION & RECONSTRUCTION CONSENT DECREE

RED GULLY LIFT STATION CONTROL WIRING DIAGRAM-II

I-32

WBS NUMBER	FOR CITY OF HOUSTON USE ONLY
R-000267-0175-4	
DRAWING SCALE	
NONE	
CITY OF HOUSTON PM	
NP NAWARAJ PANTA, P.E.	
SHEET NO. 148 OF 312	

FILE PATH: O:\H8103_Houston Lift Station Removal And Replacement (CMAR)\6 Drawings\Instrumentation And Control\Working\Red Gully\Red Gully_I-07.dwg
PLOT STYLE: GAI.ctb PLOTTED: 11/21/2025 10:23 PM

FIELD	MOTOR CONTROL CENTER	CONTROL PANEL	
		DOOR	INTERIOR PANEL

MATCHLINE 2

120 VAC POWER

24VDC

L1A | 24+ | 24- | L1N

M1 M2 M3 9 — 19

10 — 20

RFLP: R, 2, 10

L1

N

MS

MOTION SWITCH

L1

N

MS

MOTION SWITCH

34 — 34

RUV: R, 2, 10

RPLC1: R, 2, 10

RPLC2: R, 2, 10

RPLC3: R, 2, 10

YI-1 G PRIMARY PLC

RPLC3 6 5

YI-2 G BACKUP PLC

ØA ØB ØC

JE-2 PHASE MONITOR 7 8 9 10 11 12

N/C

YI-2 BUILDING EXTERIOR ALARM LIGHT R

RUV 11 9

L1A | 24+ | 24- | L1N

MATCHLINE 3

1M		DI COMMON
2M		AI COMMON
1L		DO POWER
3		DO POWER
30	1A	Q0.0 SPARE
32	50mA	I0.0 PLC INTRUSION ALARM
34	50mA	I0.1 PHASE FAILURE UNDER VOLTAGE
37	50mA	I0.3 SPARE
38	50mA	Q0.1 PLC MODE ACTIVE
41	50mA	I0.2 SPARE
BACK UP PLC		
33B	50mA	Q0.6 SPARE
45	50mA	Q0.2 HIGH LEVEL ALARM
BACK UP PLC		
18B	50mA	I0.0 PHASE FAILURE UNDER VOLTAGE

LEGEND

- △ DEVICE OR FIELD TERMINAL LOCATED AT MOTOR
- ✳ DEVICE OR FIELD TERMINAL LOCATED REMOTE
- □ DEVICE OR FIELD TERMINAL LOCATED AT MCC/POWER PANEL
- ■ FIELD TERMINAL LOCATED AT CONTROL PANEL
- ▲ REMOTE TERMINAL
- ● DEVICE TERMINAL NO.
- ◆ PLC INTERFACE TERMINAL

NO.	DATE	REVISION	APP.

GAI
Gupta & Associates, Inc.
CONSULTING ENGINEERING
Registration No. F-2593
302 Dennis St., Houston, Texas 77006
Tel: 713-636-2936
Fax: 713-636-2987
email: hforouzan@gaiconsulting.com

ARCADIS
Infrastructure · Water · Environment · Buildings
1330 Post Oak Blvd, Suite 2250
Houston, TX 77056
Tel: 713-953-4800
Fax: 713-977-4620
www.arcadis.com
Texas Registered Engineering Firm F-533

SURVEYED BY: AMANI ENGR.
FB NO. P-6335

STATE OF TEXAS · H. A. FOROUZAN · 77748 · REGISTERED PROFESSIONAL ENGINEER
11/18/2025

CITY OF HOUSTON

HOUSTON PUBLIC WORKS

LIFT STATION REHABILITATION & RECONSTRUCTION
CONSENT DECREE

RED GULLY LIFT STATION CONTROL WIRING DIAGRAM–III

I–33

WBS NUMBER	FOR CITY OF HOUSTON USE ONLY
R-000267-0175-4	
DRAWING SCALE	
NONE	
CITY OF HOUSTON PM	
NP NAWARAJ PANTA, P.E.	
SHEET NO. 149 OF 312	

FILE PATH: O:\H8103_Houston Lift Station Removal And Replacement (CMAR)\6 Drawings\Instrumentation And Control\Working\Red Gully\Red Gully_I-08.dwg
PLOT STYLE: GAI.ctb PLOTTED: 11/21/2025 10:24 PM

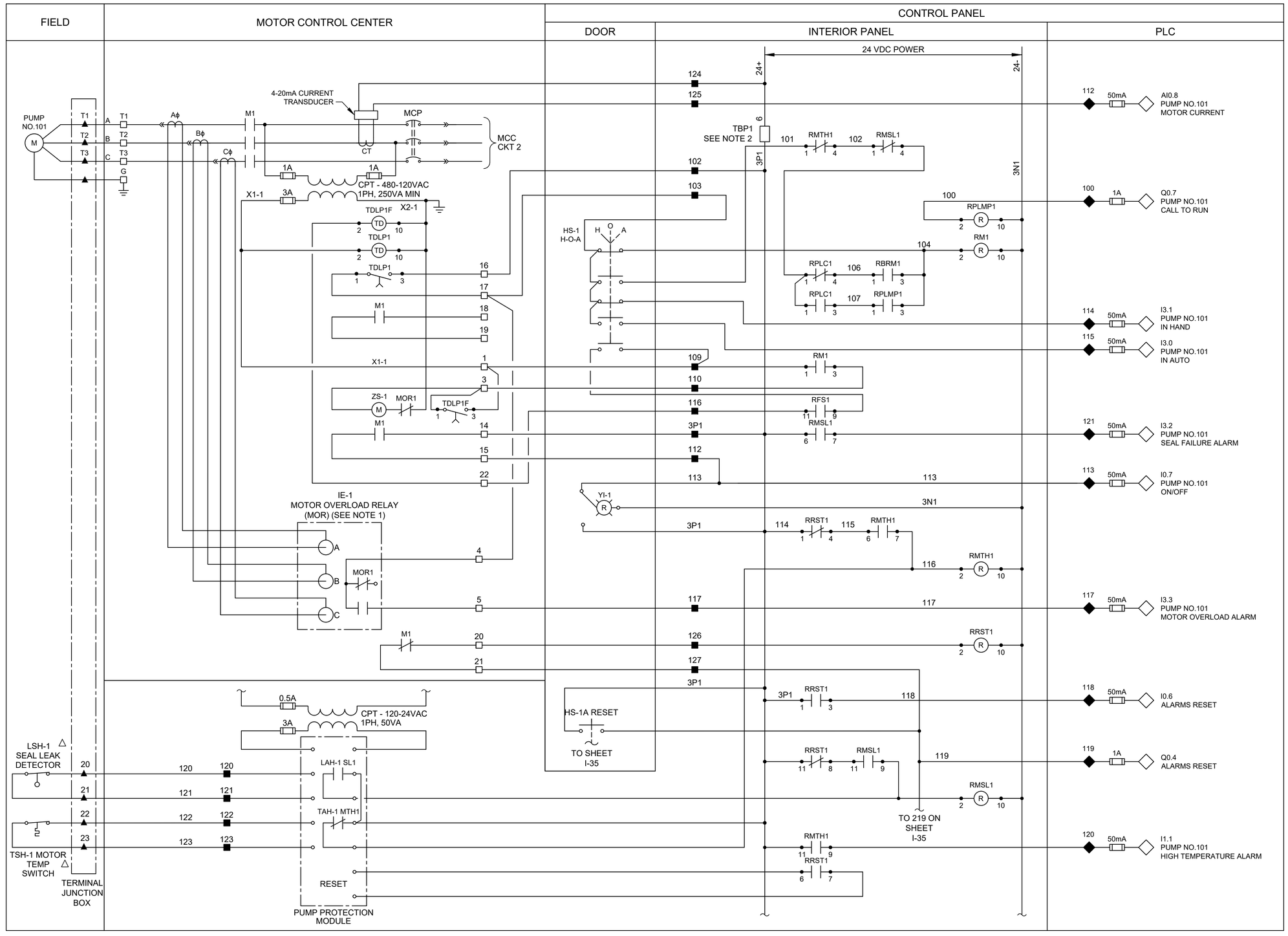

LEGEND

- △ DEVICE OR FIELD TERMINAL LOCATED AT MOTOR
- ✳ DEVICE OR FIELD TERMINAL LOCATED REMOTE
- □ DEVICE OR FIELD TERMINAL LOCATED AT MCC/POWER PANEL
- ■ FIELD TERMINAL LOCATED AT CONTROL PANEL
- ▲ REMOTE TERMINAL
- ● DEVICE TERMINAL NO.
- ◆ PLC INTERFACE TERMINAL

NOTES:

1. MOTOR OVERLOAD RELAY OUTPUT CONTACT SHOWN NORMALLY CLOSED WHEN RELAY IS DE-ENERGIZED, OPEN WHEN ENERGIZED, AND CLOSED WHEN IN ALARM. VERIFY OPERATION OF RELAY PROVIDED AND ADJUST CONNECTION OF RMOR AUXILIARY RELAYS.
2. FUSED TERMINAL ON TERMINAL BLOCK TB4 SEE CONTROL POWER AND COMMUNICATION WIRING DIAGRAM DRAWING NO. E-35.
3. ALL FLOAT CONTROL CIRCUIT WIRES COLOR SHALL BE YELLOW.

NO.	DATE	REVISION	APP.

GAI
Gupta & Associates, Inc.
CONSULTING ENGINEERING
Registration No. F-2593
302 Dennis St.,
Houston, Texas 77006
Tel: 713-636-2936
Fax: 713-636-2987
email: hforouzan@gaiconsulting.com

ARCADIS
Infrastructure · Water · Environment · Buildings
1330 Post Oak Blvd, Suite 2250
Houston, TX 77056
Tel: 713-953-4800
Fax: 713-977-4620
www.arcadis.com
Texas Registered Engineering Firm F-533

SURVEYED BY: AMANI ENGR. 11/18/2025
FB NO. P-6335

STATE OF TEXAS · H. A. FOROUZAN · 77748 · REGISTERED PROFESSIONAL ENGINEER

CITY OF HOUSTON

HOUSTON PUBLIC WORKS

LIFT STATION REHABILITATION & RECONSTRUCTION CONSENT DECREE

RED GULLY LIFT STATION CONTROL WIRING DIAGRAM PUMP-101

I-34

WBS NUMBER	FOR CITY OF HOUSTON USE ONLY
R-000267-0175-4	
DRAWING SCALE	
NONE	
CITY OF HOUSTON PM	
NP NAWARAJ PANTA, P.E.	
SHEET NO. 150 OF 312	

FILE PATH: O:\H8103_Houston Lift Station Removal And Replacement (CMAR)\6 Drawings\Instrumentation And Control\Working\Red Gully\Red Gully_I-09.dwg
PLOT STYLE: GAI.ctb PLOTTED: 11/21/2025 10:24 PM

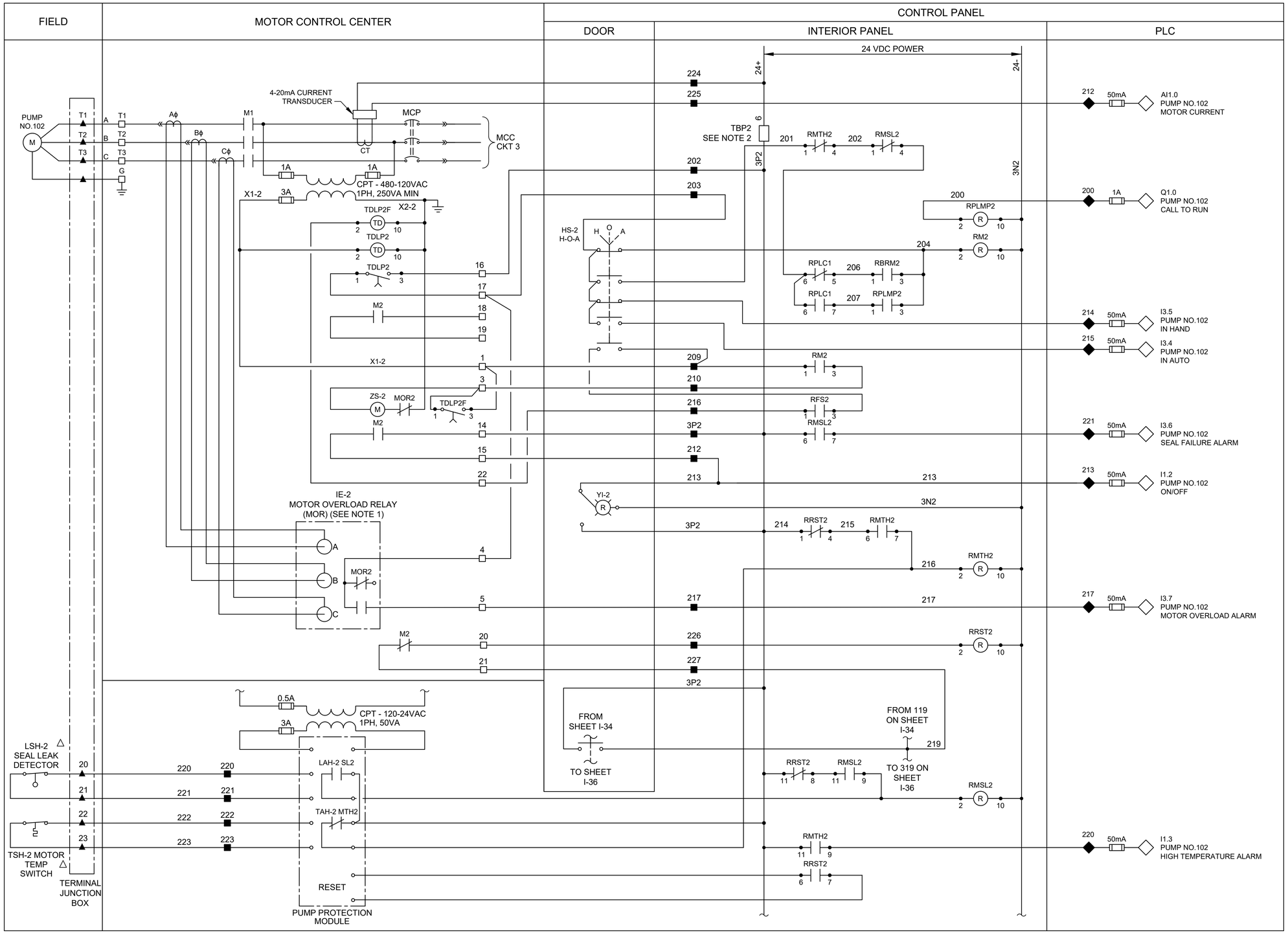

LEGEND

- △ DEVICE OR FIELD TERMINAL LOCATED AT MOTOR
- ✳ DEVICE OR FIELD TERMINAL LOCATED REMOTE
- □ DEVICE OR FIELD TERMINAL LOCATED AT MCC/POWER PANEL
- ■ FIELD TERMINAL LOCATED AT CONTROL PANEL
- ▲ REMOTE TERMINAL
- ● DEVICE TERMINAL NO.
- ◆ PLC INTERFACE TERMINAL

NOTES:

1. MOTOR OVERLOAD RELAY OUTPUT CONTACT SHOWN NORMALLY CLOSED WHEN RELAY IS DE-ENERGIZED, OPEN WHEN ENERGIZED, AND CLOSED WHEN IN ALARM. VERIFY OPERATION OF RELAY PROVIDED AND ADJUST CONNECTION OF RMOR AUXILIARY RELAYS.
2. FUSED TERMINAL ON TERMINAL BLOCK TB4 SEE CONTROL POWER AND COMMUNICATION WIRING DIAGRAM DRAWING NO. E-35.
3. ALL FLOAT CONTROL CIRCUIT WIRES COLOR SHALL BE YELLOW.

GAI
Gupta & Associates, Inc.
CONSULTING ENGINEERING
Registration No. F-2593
302 Dennis St., Houston, Texas 77006
Tel: 713-636-2936
Fax: 713-636-2987
email: hforouzan@gaiconsulting.com

ARCADIS
Infrastructure · Water · Environment · Buildings
1330 Post Oak Blvd, Suite 2250
Houston, TX 77056
Tel: 713-953-4800
Fax: 713-977-4620
www.arcadis.com
Texas Registered Engineering Firm F-533

SURVEYED BY: AMANI ENGR.
FB NO. P-6335

STATE OF TEXAS
H. A. FOROUZAN
77748
REGISTERED PROFESSIONAL ENGINEER
11/18/2025

CITY OF HOUSTON

HOUSTON PUBLIC WORKS

LIFT STATION REHABILITATION & RECONSTRUCTION CONSENT DECREE

RED GULLY LIFT STATION CONTROL WIRING DIAGRAM PUMP-102

I-35

WBS NUMBER	FOR CITY OF HOUSTON USE ONLY
R-000267-0175-4	
DRAWING SCALE	
NONE	
CITY OF HOUSTON PM	
NP NAWARAJ PANTA, P.E.	
SHEET NO. 151 OF 312	

NO.	DATE	REVISION	APP.

FILE PATH: O:\H8103_Houston Lift Station Removal And Replacement (CMAR)\6 Drawings\Instrumentation And Control\Working\Red Gully\Red Gully_I-10.dwg
PLOT STYLE: GAI.ctb PLOTTED: 11/21/2025 10:24 PM

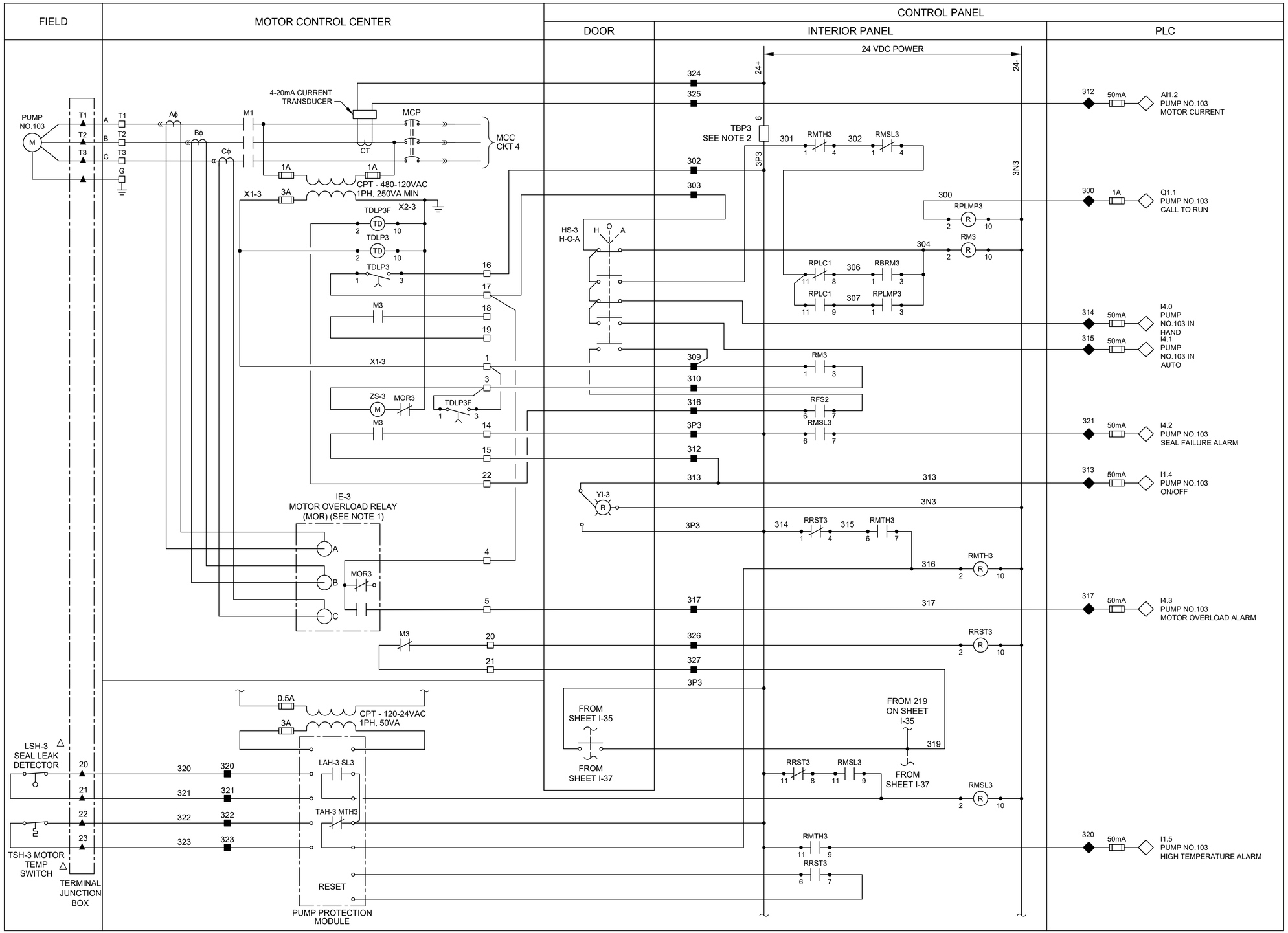

LEGEND

- △ DEVICE OR FIELD TERMINAL LOCATED AT MOTOR
- ✳ DEVICE OR FIELD TERMINAL LOCATED REMOTE
- □ DEVICE OR FIELD TERMINAL LOCATED AT MCC/POWER PANEL
- ■ FIELD TERMINAL LOCATED AT CONTROL PANEL
- ▲ REMOTE TERMINAL
- ● DEVICE TERMINAL NO.
- ◆ PLC INTERFACE TERMINAL

NOTES:

1. MOTOR OVERLOAD RELAY OUTPUT CONTACT SHOWN NORMALLY CLOSED WHEN RELAY IS DE-ENERGIZED, OPEN WHEN ENERGIZED, AND CLOSED WHEN IN ALARM. VERIFY OPERATION OF RELAY PROVIDED AND ADJUST CONNECTION OF RMOR AUXILIARY RELAYS.
2. FUSED TERMINAL ON TERMINAL BLOCK TB4 SEE CONTROL POWER AND COMMUNICATION WIRING DIAGRAM DRAWING NO. E-35.
3. ALL FLOAT CONTROL CIRCUIT WIRES COLOR SHALL BE YELLOW.

GAI
Gupta & Associates, Inc.
CONSULTING ENGINEERING
Registration No. F-2593
302 Dennis St., Houston, Texas 77006
Tel: 713-636-2936
Fax: 713-636-2987
email: hforouzan@gaiconsulting.com

ARCADIS
Infrastructure · Water · Environment · Buildings
1330 Post Oak Blvd, Suite 2250
Houston, TX 77056
Tel: 713-953-4800
Fax: 713-977-4620
www.arcadis.com
Texas Registered Engineering Firm F-533

SURVEYED BY: AMANI ENGR.
FB NO. P-6335

STATE OF TEXAS
H. A. FOROUZAN
77748
REGISTERED PROFESSIONAL ENGINEER
11/18/2025

CITY OF HOUSTON

HOUSTON PUBLIC WORKS

LIFT STATION REHABILITATION & RECONSTRUCTION CONSENT DECREE

RED GULLY LIFT STATION CONTROL WIRING DIAGRAM PUMP-103

I-36

WBS NUMBER	FOR CITY OF HOUSTON USE ONLY
R-000267-0175-4	
DRAWING SCALE	
NONE	
CITY OF HOUSTON PM	
NP NAWARAJ PANTA, P.E.	
SHEET NO. 152 OF 312	

NO.	DATE	REVISION	APP.

FILE PATH: O:\H8103_Houston Lift Station Removal And Replacement (CMAR)\6 Drawings\Instrumentation And Control\Working\Red Gully\Red Gully_I-11.dwg
PLOT STYLE: GAI.ctb PLOTTED: 11/21/2025 10:25 PM

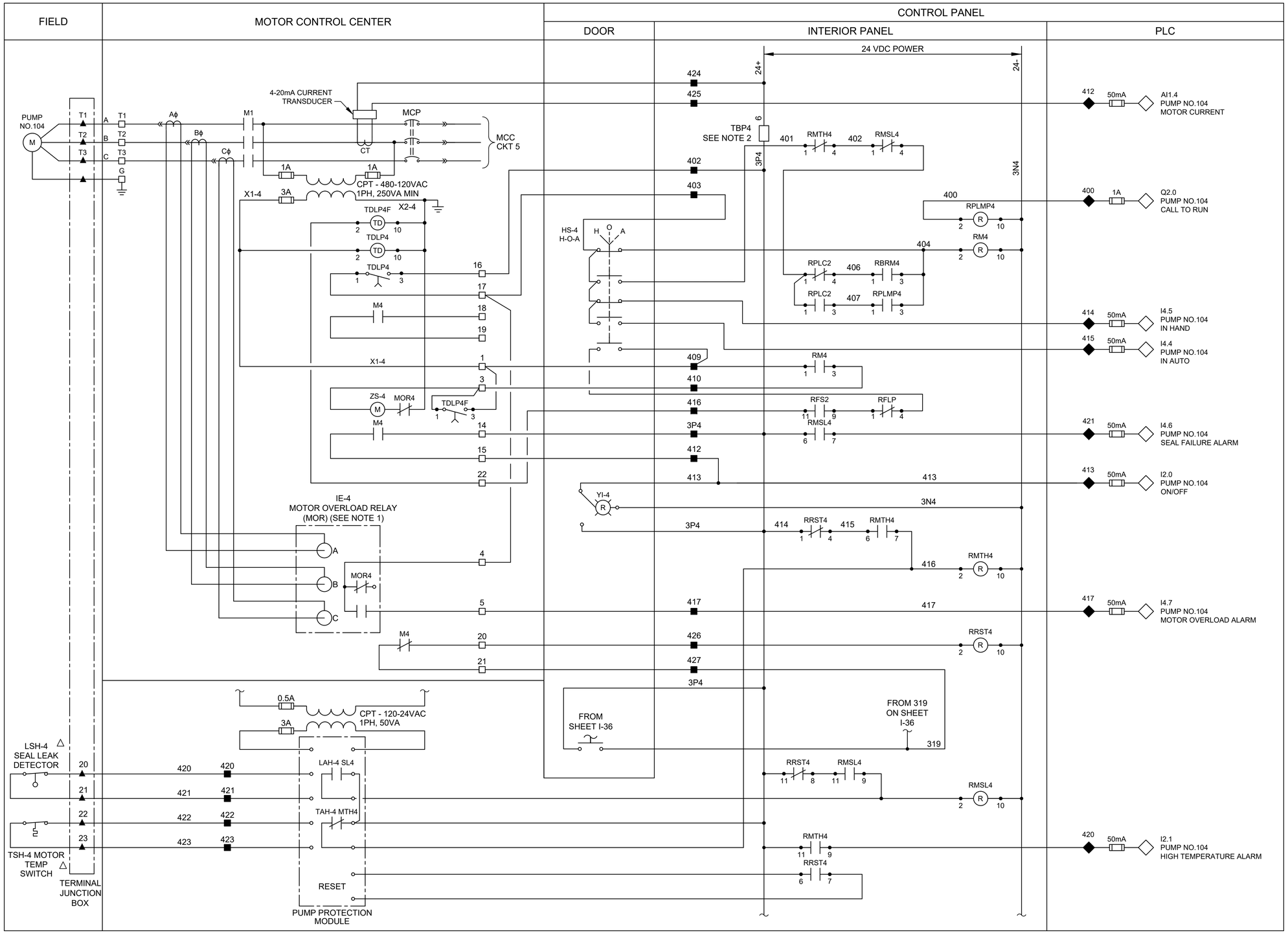

LEGEND

- △ DEVICE OR FIELD TERMINAL LOCATED AT MOTOR
- ✳ DEVICE OR FIELD TERMINAL LOCATED REMOTE
- □ DEVICE OR FIELD TERMINAL LOCATED AT MCC/POWER PANEL
- ■ FIELD TERMINAL LOCATED AT CONTROL PANEL
- ▲ REMOTE TERMINAL
- ● DEVICE TERMINAL NO.
- ◆ PLC INTERFACE TERMINAL

NOTES:

1. MOTOR OVERLOAD RELAY OUTPUT CONTACT SHOWN NORMALLY CLOSED WHEN RELAY IS DE-ENERGIZED, OPEN WHEN ENERGIZED, AND CLOSED WHEN IN ALARM. VERIFY OPERATION OF RELAY PROVIDED AND ADJUST CONNECTION OF RMOR AUXILIARY RELAYS.
2. FUSED TERMINAL ON TERMINAL BLOCK TB4 SEE CONTROL POWER AND COMMUNICATION WIRING DIAGRAM DRAWING NO. E-35.
3. ALL FLOAT CONTROL CIRCUIT WIRES COLOR SHALL BE YELLOW.

GAI
Gupta & Associates, Inc.
CONSULTING ENGINEERING
Registration No. F-2593
302 Dennis St., Houston, Texas 77006
Tel: 713-636-2936
Fax: 713-636-2987
email: hforouzan@gaiconsulting.com

ARCADIS
Infrastructure · Water · Environment · Buildings
1330 Post Oak Blvd, Suite 2250
Houston, TX 77056
Tel: 713-953-4800
Fax: 713-977-4620
www.arcadis.com
Texas Registered Engineering Firm F-533

SURVEYED BY: AMANI ENGR.
FB NO. P-6335

STATE OF TEXAS
H. A. FOROUZAN
77748
REGISTERED PROFESSIONAL ENGINEER
11/18/2025

CITY OF HOUSTON

HOUSTON PUBLIC WORKS

LIFT STATION REHABILITATION & RECONSTRUCTION CONSENT DECREE

RED GULLY LIFT STATION CONTROL WIRING DIAGRAM PUMP-104

I-37

WBS NUMBER	FOR CITY OF HOUSTON USE ONLY
R-000267-0175-4	
DRAWING SCALE	
NONE	
CITY OF HOUSTON PM	
NP NAWARAJ PANTA, P.E.	
SHEET NO. 153 OF 312	

NO.	DATE	REVISION	APP.

FILE PATH: O:\H8103_Houston Lift Station Removal And Replacement (CMAR)\6 Drawings\Instrumentation And Control\Working\Red Gully\Red Gully_I-12.dwg
PLOT STYLE: GAI.ctb PLOTTED: 11/21/2025 10:25 PM

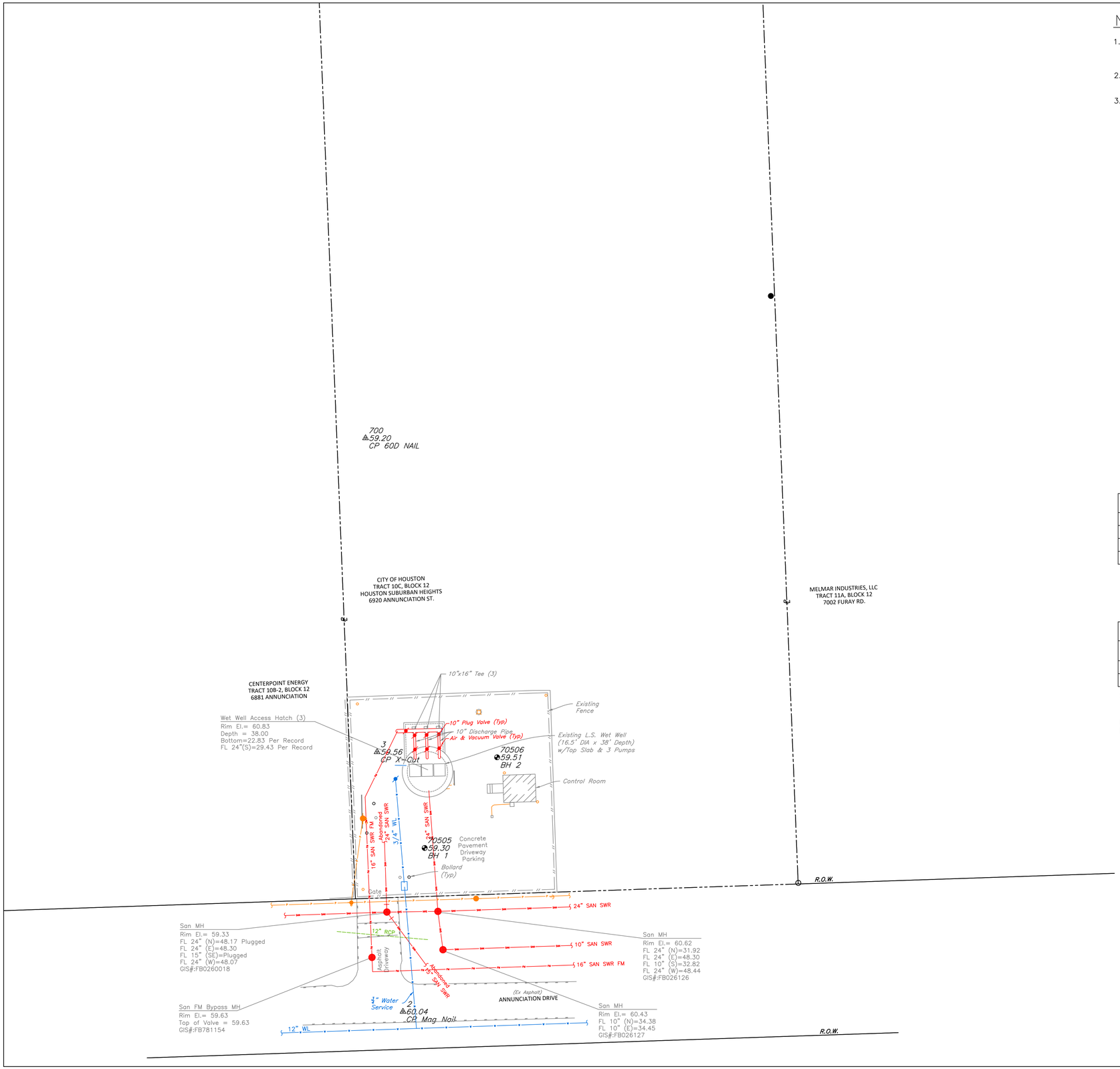

NOTES

1. CONTRACTOR TO DETERMINE EXACT LOCATION OF EXISTING FORCE MAIN PRIOR TO CONSTRUCTION OF PROPOSED WORK.
2. FORCE MAIN BELOW GRADE SHALL BE POLYETHYLENE WRAPPED DIP. FORCE MAIN ABOVE GRADE SHALL BE DIP.
3. PROPOSED CONCRETE SITE SLAB ELEVATION TO BE SAME AS EXISTING.

N

0' 10' 20' 40'

SCALE: 1"=20'

BENCHMARK:

STATIC GPS OBSERVATION OF CITY OF HOUSTON MONUMENT 5563-8402 MADE ON 08/01/2024. A BRASS DISK LOCATED ON THE WEST SIDE OF BRIDGE ON SUBURBAN STREET, APPROXIMATELY 0.24 MILE SOUTH OF MT. HOUSTON ROAD INTERSECTION
ELEVATION: 63.96' (NAVD 88 GEOID 18)

SUMMARY TABLE	
LIFT STATION NAME	ANNUNCIATION
LIFT STATION NUMBER	FN435
ADDRESS	6920 ANNUNCIATION ST
KEY MAP	415P

FLOODPLAIN TABLE	
FREQUENCY	WATER SURFACE ELEVATION, FT
500-YR	63.0
100-YR	62.3

SOURCE: FEMA FLOOD PROFILES
E100-00-00 (WHITE OAK BAYOU) E02P

FEMA MAP NO.: 48201C0670M
LIFT STATION IS OUTSIDE OF THE SHADED ZONE AE.

NO	DATE	REVISION	APPROVED

NOTICE:
FOR YOUR SAFETY, YOU ARE REQUIRED BY TEXAS LAW TO CALL 811 AT LEAST 48 HOURS BEFORE YOU DIG SO THAT UNDERGROUND LINES CAN BE MARKED. THIS SIGNATURE DOES NOT FULFILL YOUR OBLIGATION TO CALL 811

VERIFICATION OF PRIVATE UTILITY LINES

Mike Brower 03/25/26
Date

CenterPoint Energy natural gas utilities shown. (Gas service lines are not shown). This signature not be used for conflict verification.

Signature valid for six months.

Mike Brower 03/25/26
Date

CenterPoint Energy/UNDERGROUND Electrical Facilities Verification ONLY.
(This signature verifies existing underground facilities – not to be used for conflict verification)

Signature valid for six months.

Chris Primrose 3/25/26
Date

Approved for AT&T underground conduit facilities only.
Signature valid for one year.

EJES INCORPORATED
Corporate Office
12801 North Central Expressway, Suite 700
Dallas, Texas 75243
(P) 214-343-1210
(F) 214-343-3885
Houston Office
6161 Savoy Drive, Suite 830
Houston, Tx. 77036
(P) 281-272-1612
(F) 281-272-1619
EJES, Inc. Copyright © 2017
FIRM REGISTRATION No. 2488

SURVEYED BY: AMANI ENGR.
FB NO. P-6335

STATE OF TEXAS
TANITA GILBERT ALEXANDER
88719
LICENSED
PROFESSIONAL ENGINEER
3-20-26

CITY OF HOUSTON
HOUSTON PUBLIC WORKS

LIFT STATION REHABILITATION & RECONSTRUCTION CONSENT DECREE

ANNUNCIATION LIFT STATION EXISTING SITE PLAN

C-28

WBS NUMBER	FOR CITY OF HOUSTON USE ONLY
R-000267-0175-4	
DRAWING SCALE	
1" = 20'	
CITY OF HOUSTON PM	
NP NAWARAJ PANTA, P.E.	
SHEET NO. 154 OF 312	

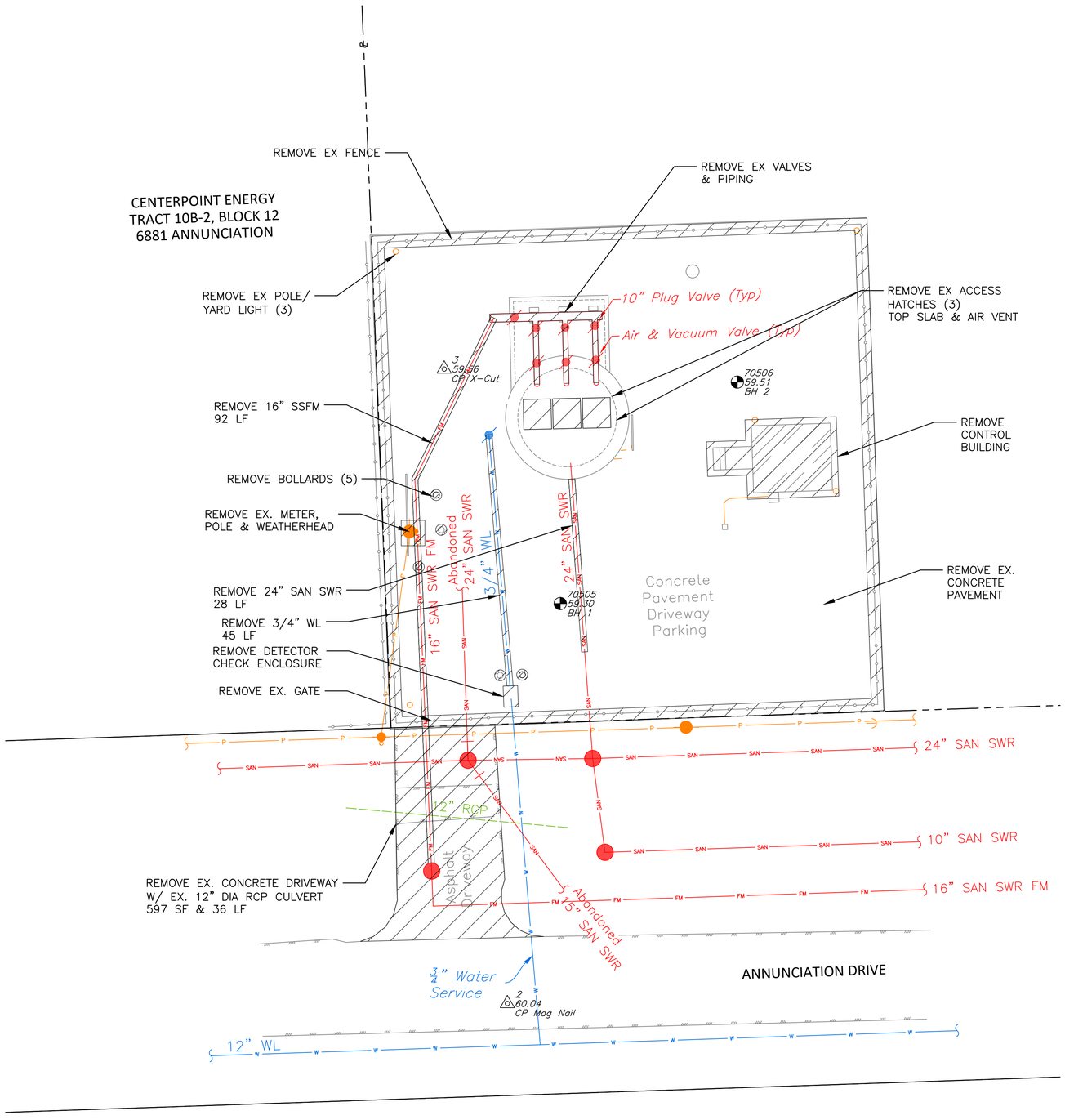

NOTES

1. MAINTAIN FLOW IN EXISTING SEWERS AND LIFT STATIONS UNTIL ACCEPTANCE OF PROPOSED LIFT STATION AND SEWERS.
2. CONTRACTOR SHALL DISPOSE OF ANY LIQUID OR SOLID WASTE FOUND IN THE WET WELL AT A DISPOSAL FACILITY LICENSED AND APPROVED BY THE STATE. THE CONTRACTOR SHALL BE RESPONSIBLE FOR THE COST OF ANY TESTING REQUIRED BY THE STATE AND FEDERAL REGULATORY AGENCIES AND THE DISPOSAL FACILITY.
3. NOTIFY THE CITY 48 HOURS PRIOR TO DEMOLITION IN ORDER TO COORDINATE THE REMOVAL OF ANY ITEMS THE CITY WISHES TO CLAIM AS SALVAGE.
4. CITY TO HAVE THE RIGHT OF FIRST REFUSAL. DELIVER SALVAGE ITEMS TO CITY OF HOUSTON FACILITY WITHIN CITY, OTHER ITEMS TO BE DISPOSED OF BY THE CONTRACTOR AT THE EXPENSE OF THE CONTRACTOR.
5. REFER TO LEAD AND ASBESTOS MATERIAL TESTING REPORTS FOR ANY SPECIAL HANDLING AND/OR DISPOSAL REQUIREMENTS.
6. CONTRACTOR SHALL REMOVE AND DISPOSE OF ALL PIPING, VALVES, STAIRS AND MATERIALS IN WET WELL UNLESS OTHERWISE STATED.
7. PROVIDE TEMPORARY PLUG FOR THE EXISTING 24 INCH SANITARY SEWER LEADING TO THE LIFT STATION DURING DEMOLITION/CONSTRUCTION BY PASS PUMP FROM THE EXISTING MANHOLE TO THE EXISTING 16 INCH FORCE MAIN, PER SPECIFICATION 01506–DIVERSION PUMPING.
8. EXISTING UTILITY LOCATIONS WERE DEVELOPED FROM BEST INFORMATION AVAILABLE. CONTRACTOR IS TO FIELD VERIFY EXISTING UTILITY LOCATIONS PRIOR TO EXCAVATION. ALL SHOP DRAWINGS USE TO HAVE FIELD VERIFIED FACILITY, STRUCTURAL, AND UTILITY LOCATION INDICATED.
9. DURING THE DEMOLITION/CONSTRUCTION PROCESS, IT IS CRITICAL THAT THE WASTE WATER TREATMENT FACILITIES BE KEPT IN SERVICE EXCEPT FOR SHORT PERIODS OF TIME FOR CONNECTION OF PROPOSED ITEMS. THE CONTRACTOR SHALL SUBMIT A SCHEDULE THAT SHOWS ITEMS TO BE REMOVED FOR SERVICE, INSTALLATION OF PROPOSED ITEMS, AND ESTIMATED DOWN TIME. ALL WORK INVOLVING INSTALLING OF DIVERSION PUMPING SYSTEM AND DOWN TIME SHALL BE COORDINATED WITH THE ENGINEER AND THE OPERATOR.

LIFT STATION DEMOLITION AND SALVAGE NOTES

1. DO NOT PROCEED WITH DEMOLITION OR REMOVAL UNTIL AUTHORIZED BY PROJECT MANAGER. NO DEMOLITION SHALL BE PERFORMED UNTIL BYPASS PUMPING IS OPERATIONAL.
2. PROVIDE SAFE WORKING CONDITIONS FOR EMPLOYEES THROUGHOUT DEMOLITION AND REMOVAL OPERATIONS. OBSERVE SAFETY REQUIREMENTS FOR WORK BELOW GRADE.
3. MAINTAIN SAFE ACCESS TO ADJACENT PROPERTY AND BUILDINGS. DO NOT OBSTRUCT ROADWAYS, SIDEWALKS OR PASSAGEWAYS ADJACENT TO THE WORK.
4. PERFORM DEMOLITION IN A MANNER TO PREVENT DAMAGE TO ADJACENT PROPERTY. REPAIR DAMAGE TO CITY PROPERTY OR ADJACENT PROPERTY AND FACILITIES.
5. THE CONTRACTOR SHALL BE RESPONSIBLE FOR SAFETY AND INTEGRITY OF ADJACENT STRUCTURE AND SHALL BE LIABLE FOR ANY DAMAGE DUE TO MOVEMENT OR SETTLEMENT. PROVIDED PROPER FRAMING AND SHORING NECESSARY FOR SUPPORT. CEASE OPERATIONS IF AN ADJACENT STRUCTURE APPEARS TO BE ENDANGERED. RESUME DEMOLITION ONLY AFTER PROPER PROTECTIVE MEASURES HAVE BEEN TAKEN.
6. NOTIFY AND COORDINATE WITH UTILITY COMPANY AND ADJACENT BUILDING OCCUPANTS WHEN TEMPORARY INTERRUPTION OF UTILITY SERVICE IS NECESSARY.
7. REMOVE REMAINING SLUDGE, SOLIDS, AND MATERIALS FROM WET WELL AND RINSE/CLEAN INTERIOR.
8. DEMOLITION OF CONCRETE LIFT STATION STRUCTURES, CONCRETE SLABS, AND WALLS AS SHOWN ON STRUCTURAL SHEETS S–18 TO S–19.
9. REMOVE ALL PIPING, WIRING, CONDUITS, DUCTWORK AND OTHER MISCELLANEOUS ITEMS TO CONCRETE SURFACES.
10. CONTRACTOR TO OBTAIN ALL NECESSARY PERMITS (INCLUDING DEMOLISH PERMITS, COH FORM NO. CE–1075 & TEXAS DSHS FORM APB#5) REQUIRED. CONTRACTOR SHALL COORDINATE DISCONNECT WITH CENTERPOINT ENERGY TO ELECTRICAL POWER.
11. THE CITY OF HOUSTON HAS THE FIRST RIGHT OF REFUSAL OF ANY EQUIPMENT OR MATERIAL REMOVED. CONTACT CITY PROJECT MANAGER AL LEAST 72 HOUR PRIOR TO DEMOLITION IN ORDER TO COORDINATE REMOVAL OF ANY ITEMS THE CITY WISHES TO CLAIM AS SALVAGE. THE CONTRACTOR SHALL DELIVER ALL SALVAGED ITEMS TO A LOCATION, WITHIN THE CITY, DETERMINED BY THE CITY. THE CONTRACTOR SHALL PROPERLY DISPOSE OFF ALL OTHER EQUIPMENT AND MATERIAL NOT IDENTIFIED FOR SALVAGE.
12. THE EXISTING WET WELL SHALL BE CLEANED OF ALL DEBRIS, WASTEWATER, AND OTHER RESIDUES.
13. THE CONTRACTOR SHALL DISPOSE OF ANY LIQUID OR SOLID WASTE FOUND IN THE WET WELL AT A DISPOSAL FACILITY LICENSED & APPROVED BY THE STATE OF TEXAS. THE CONTRACTOR SHALL BE RESPONSIBLE FOR THE COST OF TRANSPORTATION, DISPOSAL & TESTING REQUIRED BY STATE & FEDERAL REGULATORY AGENCIES & BY THE DISPOSAL FACILITY.
14. CONTRACTOR TO COORDINATE WITH CENTERPOINT ENERGY ON REMOVAL OF POWER LINES FROM SERVICE POLE TO ELECTRICAL POLE.

N

0' 5' 10' 20'

SCALE: 1"=10'

LEGEND

DEMOLITION / ADJUSTMENT / ABANDONMENT

BENCHMARK:

STATIC GPS OBSERVATION OF CITY OF HOUSTON MONUMENT 5563–8402 MADE ON 08/01/2024. A BRASS DISK LOCATED ON THE WEST SIDE OF BRIDGE ON SUBURBAN STREET, APPROXIMATELY 0.24 MILE SOUTH OF MT. HOUSTON ROAD INTERSECTION
ELEVATION: 63.96' (NAVD 88 GEOID 18)

NO	DATE	REVISION	APPROVED

NOTICE:
FOR YOUR SAFETY, YOU ARE REQUIRED BY TEXAS LAW TO CALL 811 AT LEAST 48 HOURS BEFORE YOU DIG SO THAT UNDERGROUND LINES CAN BE MARKED. THIS SIGNATURE DOES NOT FULFILL YOUR OBLIGATION TO CALL 811

VERIFICATION OF PRIVATE UTILITY LINES

Mike Brower 02/17/26
Date

CenterPoint Energy natural gas utilities shown. (Gas service lines are not shown). This signature not be used for conflict verification.

Signature valid for six months.

Mike Brower 02/17/26
Date

CenterPoint Energy/UNDERGROUND Electrical Facilities Verification ONLY.
(This signature verifies existing underground facilities – not to be used for conflict verification)

Signature valid for six months.

Elvina Allison 02/18/2026
Date

Approved for AT&T underground conduit facilities only.
Signature valid for one year.

EJES INCORPORATED
Corporate Office
12801 North Central Expressway, Suite 700
Dallas, Texas 75243
(P) 214–343–1210
(F) 214–343–3885
Houston Office
6161 Savoy Drive, Suite 830
Houston, Tx. 77036
(P) 281–272–1612
(F) 281–272–1619
EJES, Inc. Copyright © 2017
FIRM REGISTRATION No. 2488

SURVEYED BY: AMANI ENGR.
FB NO. P–6335

STATE OF TEXAS
TANITA GILBERT ALEXANDER
88719
LICENSED
PROFESSIONAL ENGINEER
3-20-26

CITY OF HOUSTON
HOUSTON PUBLIC WORKS

LIFT STATION REHABILITATION & RECONSTRUCTION CONSENT DECREE

ANNUNCIATION LIFT STATION SITE DEMOLITION PLAN

C–29

WBS NUMBER	FOR CITY OF HOUSTON USE ONLY
R–000267–0175–4	
DRAWING SCALE	
1" = 10'	
CITY OF HOUSTON PM	
NP NAWARAJ PANTA, P.E.	
SHEET NO. 155 OF 312	

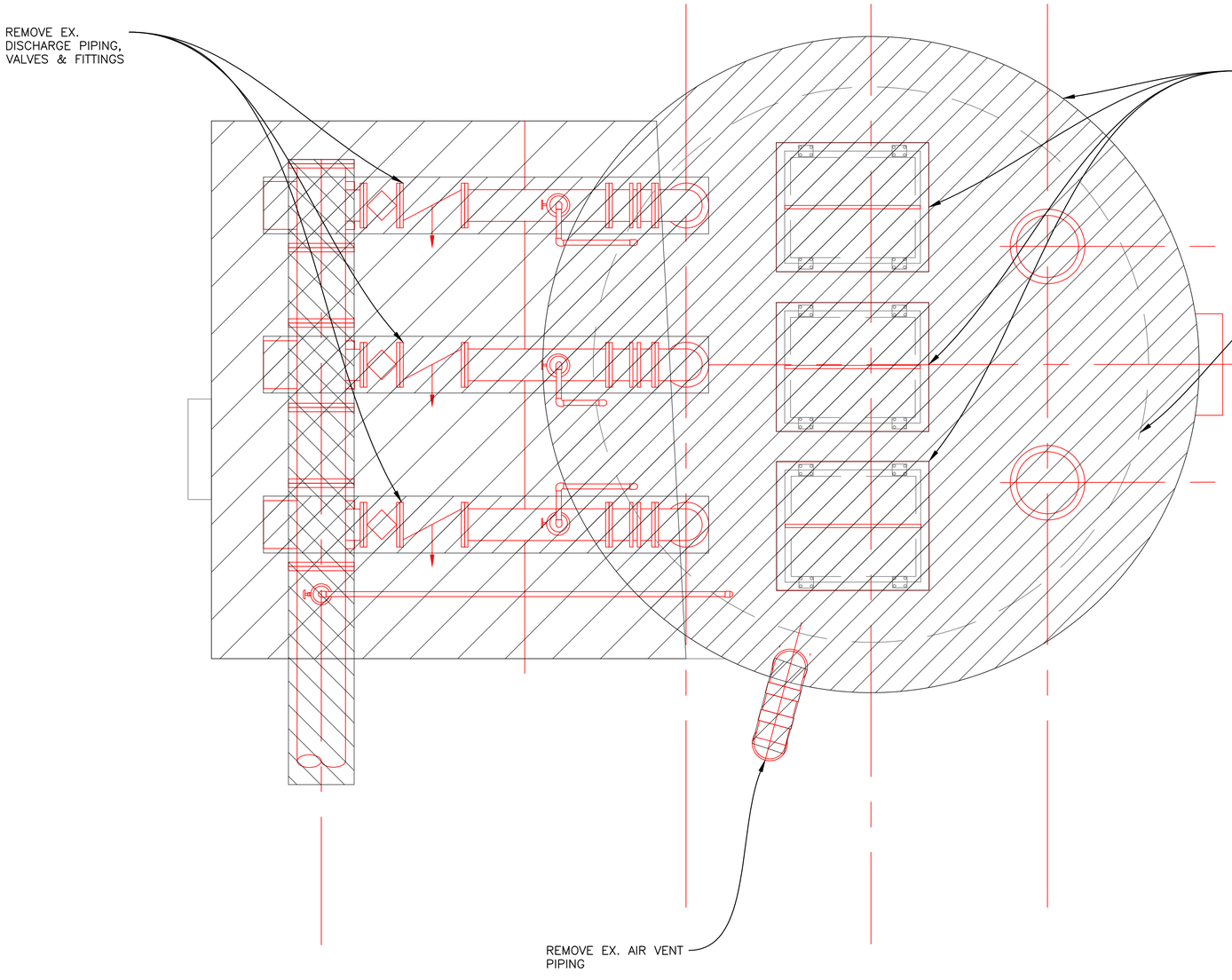

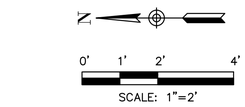

LEGEND

DEMOLITION / ADJUSTMENT / ABANDONMENT

LIFT STATION DEMOLITION AND SALVAGE NOTES

1. DO NOT PROCEED WITH DEMOLITION OR REMOVAL UNTIL AUTHORIZED BY PROJECT MANAGER. NO DEMOLITION SHALL BE PERFORMED UNTIL BYPASS PUMPING IS OPERATIONAL.
2. PROVIDE SAFE WORKING CONDITIONS FOR EMPLOYEES THROUGHOUT DEMOLITION AND REMOVAL OPERATIONS. OBSERVE SAFETY REQUIREMENTS FOR WORK BELOW GRADE.
3. MAINTAIN SAFE ACCESS TO ADJACENT PROPERTY AND BUILDINGS. DO NOT OBSTRUCT ROADWAYS, SIDEWALKS OR PASSAGEWAYS ADJACENT TO THE WORK.
4. PERFORM DEMOLITION IN A MANNER TO PREVENT DAMAGE TO ADJACENT PROPERTY. REPAIR DAMAGE TO CITY PROPERTY OR ADJACENT PROPERTY AND FACILITIES.
5. THE CONTRACTOR SHALL BE RESPONSIBLE FOR SAFETY AND INTEGRITY OF ADJACENT STRUCTURE AND SHALL BE LIABLE FOR ANY DAMAGE DUE TO MOVEMENT OR SETTLEMENT. PROVIDED PROPER FRAMING AND SHORING NECESSARY FOR SUPPORT. CEASE OPERATIONS IF AN ADJACENT STRUCTURE APPEARS TO BE ENDANGERED. RESUME DEMOLITION ONLY AFTER PROPER PROTECTIVE MEASURES HAVE BEEN TAKEN.
6. NOTIFY AND COORDINATE WITH UTILITY COMPANY AND ADJACENT BUILDING OCCUPANTS WHEN TEMPORARY INTERRUPTION OF UTILITY SERVICE IS NECESSARY.
7. DEMOLITION CONCRETE LIFT STATION STRUCTURES, CONCRETE SLABS, AND WALLS AS SHOWN ON STRUCTURAL SHEET S-18 TO S-19.
8. REMOVE ALL PIPING, WIRING, CONDUITS, DUCTWORK AND OTHER MISCELLANEOUS ITEMS TO CONCRETE SURFACES.
9. CONTRACTOR TO OBTAIN ALL NECESSARY PERMITS (INCLUDING DEMOLISH PERMITS, COH FORM NO. CE-1075 & TEXAS DSHS FORM APB#5) REQUIRED. CONTRACTOR SHALL COORDINATE DISCONNECT WITH CENTERPOINT ENERGY TO ELECTRICAL POWER.
10. THE EXISTING WET WELL SHALL BE CLEANED OF ALL DEBRIS, WASTEWATER, AND OTHER RESIDUES.
11. THE CONTRACTOR SHALL DISPOSE OF ANY LIQUID OR SOLID WASTE FOUND IN THE WET WELL AT A DISPOSAL FACILITY LICENSED & APPROVED BY THE STATE OF TEXAS. THE CONTRACTOR SHALL BE RESPONSIBLE FOR THE COST OF TRANSPORTATION, DISPOSAL & TESTING REQUIRED BY STATE & FEDERAL REGULATORY AGENCIES & BY THE DISPOSAL FACILITY.
12. CONTRACTOR TO COORDINATE WITH CENTERPOINT ENERGY ON REMOVAL OF POWER LINES FROM SERVICE POLE TO ELECTRICAL POLE.

NO	DATE	REVISION	APPROVED

NOTICE:
FOR YOUR SAFETY, YOU ARE REQUIRED BY TEXAS LAW TO CALL 811 AT LEAST 48 HOURS BEFORE YOU DIG SO THAT UNDERGROUND LINES CAN BE MARKED. THIS SIGNATURE DOES NOT FULFILL YOUR OBLIGATION TO CALL 811

VERIFICATION OF PRIVATE UTILITY LINES

Mike Brower 02/17/26
Date

CenterPoint Energy natural gas utilities shown. (Gas service lines are not shown). This signature not be used for conflict verification.

Signature valid for six months.

Mike Brower 02/17/26
Date

CenterPoint Energy/UNDERGROUND Electrical Facilities Verification ONLY.
(This signature verifies existing underground facilities – not to be used for conflict verification)

Signature valid for six months.

Tonia Allison 02/18/2026
Date

Approved for AT&T underground conduit facilities only.
Signature valid for one year.

EJES
INCORPORATED
Corporate Office
12801 North Central Expressway, Suite 700
Dallas, Texas 75243
(P) 214-343-3210
(F) 214-343-3885
Houston Office
6161 Savoy Drive, Suite 1125
Houston, Tx. 77036
(P) 281-272-1612
(F) 281-272-1619
EJES, Inc. Copyright © 2017
FIRM REGISTRATION No. 2488

SURVEYED BY: AMANI ENGR.
FB NO. P-6335

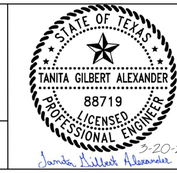

CITY OF HOUSTON
HOUSTON PUBLIC WORKS

LIFT STATION REHABILITATION & RECONSTRUCTION CONSENT DECREE

ANNUNCIATION LIFT STATION DEMOLITION PLAN AT GRADE

C-30

WBS NUMBER	FOR CITY OF HOUSTON USE ONLY
R-000267-0175-4	
DRAWING SCALE	
1" = 2'	
CITY OF HOUSTON PM	
NP NAWARAJ PANTA, P.E.	
SHEET NO. 156 OF 312	

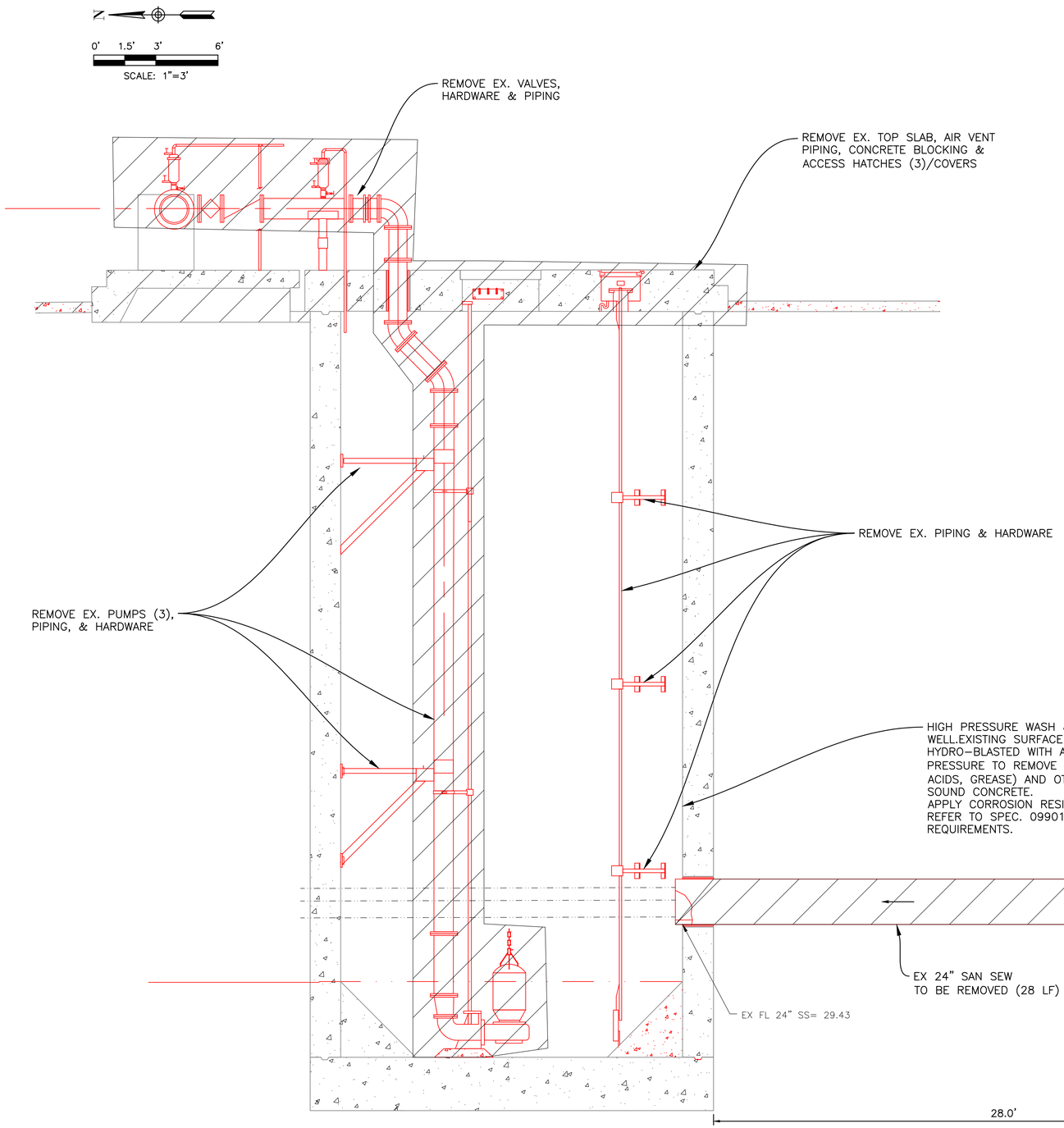

LIFT STATION DEMOLITION AND SALVAGE NOTES

1. DO NOT PROCEED WITH DEMOLITION OR REMOVAL UNTIL AUTHORIZED BY PROJECT MANAGER. NO DEMOLITION SHALL BE PERFORMED UNTIL BYPASS PUMPING IS OPERATIONAL.
2. PROVIDE SAFE WORKING CONDITIONS FOR EMPLOYEES THROUGHOUT DEMOLITION AND REMOVAL OPERATIONS. OBSERVE SAFETY REQUIREMENTS FOR WORK BELOW GRADE.
3. MAINTAIN SAFE ACCESS TO ADJACENT PROPERTY AND BUILDINGS. DO NOT OBSTRUCT ROADWAYS, SIDEWALKS OR PASSAGEWAYS ADJACENT TO THE WORK.
4. PERFORM DEMOLITION IN A MANNER TO PREVENT DAMAGE TO ADJACENT PROPERTY. REPAIR DAMAGE TO CITY PROPERTY OR ADJACENT PROPERTY AND FACILITIES.
5. THE CONTRACTOR SHALL BE RESPONSIBLE FOR SAFETY AND INTEGRITY OF ADJACENT STRUCTURE AND SHALL BE LIABLE FOR ANY DAMAGE DUE TO MOVEMENT OR SETTLEMENT. PROVIDED PROPER FRAMING AND SHORING NECESSARY FOR SUPPORT. CEASE OPERATIONS IF AN ADJACENT STRUCTURE APPEARS TO BE ENDANGERED. RESUME DEMOLITION ONLY AFTER PROPER PROTECTIVE MEASURES HAVE BEEN TAKEN.
6. NOTIFY AND COORDINATE WITH UTILITY COMPANY AND ADJACENT BUILDING OCCUPANTS WHEN TEMPORARY INTERRUPTION OF UTILITY SERVICE IS NECESSARY.
7. REMOVE REMAINING SLUDGE, SOLIDS, AND MATERIALS FROM WET WELL AND RINSE/CLEAN INTERIOR.
8. DEMOLITION OF CONCRETE LIFT STATION STRUCTURES, CONCRETE SLABS, AND WALLS AS SHOWN ON STRUCTURAL SHEET S-18 TO S-19.
9. REMOVE ALL PIPING, WIRING, CONDUITS, DUCTWORK AND OTHER MISCELLANEOUS ITEMS TO CONCRETE SURFACES.
10. CONTRACTOR TO OBTAIN ALL NECESSARY PERMITS (INCLUDING DEMOLISH PERMITS, COH FORM NO. CE-1075 & TEXAS DSHS FORM APB#5) REQUIRED. CONTRACTOR SHALL COORDINATE DISCONNECT WITH CENTERPOINT ENERGY TO ELECTRICAL POWER.
11. THE CITY OF HOUSTON HAS THE FIRST RIGHT OF REFUSAL OF ANY EQUIPMENT OR MATERIAL REMOVED. CONTACT CITY PROJECT MANAGER AL LEAST 72 HOUR PRIOR TO DEMOLITION IN ORDER TO COORDINATE REMOVAL OF ANY ITEMS THE CITY WISHES TO CLAIM AS SALVAGE. THE CONTRACTOR SHALL DELIVER ALL SALVAGED ITEMS TO A LOCATION, WITHIN THE CITY, DETERMINED BY THE CITY. THE CONTRACTOR SHALL PROPERLY DISPOSE OFF ALL OTHER EQUIPMENT AND MATERIAL NOT IDENTIFIED FOR SALVAGE.
12. THE EXISTING WET WELL SHALL BE CLEANED OF ALL DEBRIS, WASTEWATER, AND OTHER RESIDUES.
13. THE CONTRACTOR SHALL DISPOSE OF ANY LIQUID OR SOLID WASTE FOUND IN THE WET WELL AT A DISPOSAL FACILITY LICENSED & APPROVED BY THE STATE OF TEXAS. THE CONTRACTOR SHALL BE RESPONSIBLE FOR THE COST OF TRANSPORTATION, DISPOSAL & TESTING REQUIRED BY STATE & FEDERAL REGULATORY AGENCIES & BY THE DISPOSAL FACILITY.
14. CONTRACTOR TO COORDINATE WITH CENTERPOINT ENERGY ON REMOVAL OF POWER LINES FROM SERVICE POLE TO ELECTRICAL POLE.

LEGEND

DEMOLITION / ADJUSTMENT / ABANDONMENT

NO	DATE	REVISION	APPROVED

NOTICE:
FOR YOUR SAFETY, YOU ARE REQUIRED BY TEXAS LAW TO CALL 811 AT LEAST 48 HOURS BEFORE YOU DIG SO THAT UNDERGROUND LINES CAN BE MARKED. THIS SIGNATURE DOES NOT FULFILL YOUR OBLIGATION TO CALL 811

VERIFICATION OF PRIVATE UTILITY LINES

Mike Brower 02/17/26
Date

CenterPoint Energy natural gas utilities shown. (Gas service lines are not shown). This signature not be used for conflict verification.

Signature valid for six months.

Mike Brower 02/17/26
Date

CenterPoint Energy/UNDERGROUND Electrical Facilities Verification ONLY.
(This signature verifies existing underground facilities – not to be used for conflict verification)

Signature valid for six months.

Clivina Allison 02/6/2026
Date

Approved for AT&T underground conduit facilities only.
Signature valid for one year.

EJES INCORPORATED
Corporate Office
12801 North Central Expressway, Suite 700
Dallas, Texas 75243
(P) 214-343-1210
(F) 214-343-3885
Houston Office
6161 Savoy Drive, Suite 830
Houston, Tx. 77036
(P) 281-272-1612
(F) 281-272-1619
EJES, Inc. Copyright © 2017
FIRM REGISTRATION No. 2488

SURVEYED BY: AMANI ENGR.
FB NO. P-6335

STATE OF TEXAS
TANITA GILBERT ALEXANDER
88719
LICENSED PROFESSIONAL ENGINEER
3-20-26

CITY OF HOUSTON
HOUSTON PUBLIC WORKS

LIFT STATION REHABILITATION & RECONSTRUCTION CONSENT DECREE

ANNUNCIATION LIFT STATION DEMOLITION– PIPING PLAN

C-31

WBS NUMBER	FOR CITY OF HOUSTON USE ONLY
R-000267-0175-4	
DRAWING SCALE	
1"=3'	
CITY OF HOUSTON PM	
NP NAWARAJ PANTA, P.E.	
SHEET NO. 157 OF 312	

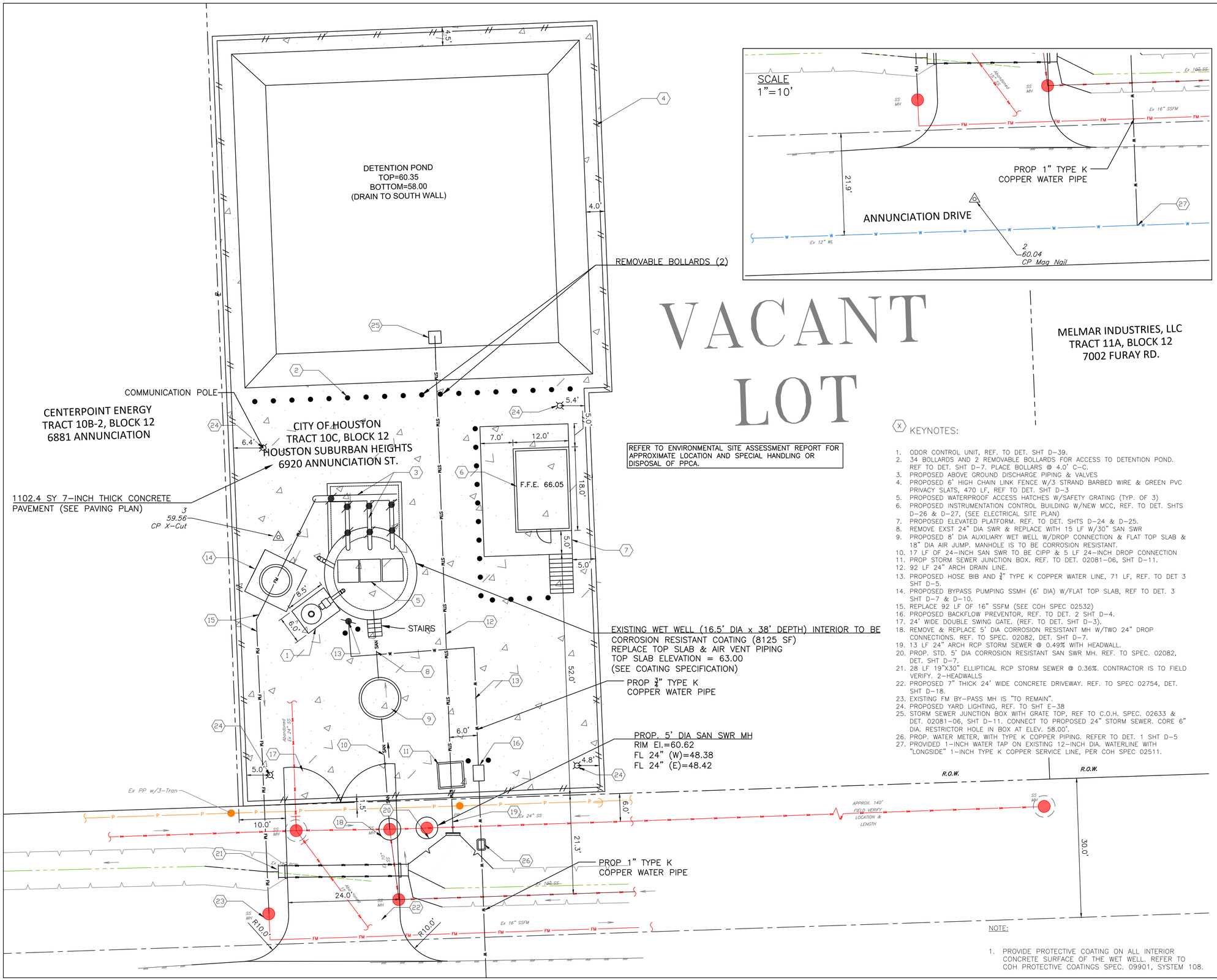

VACANT LOT

REFER TO ENVIRONMENTAL SITE ASSESSMENT REPORT FOR APPROXIMATE LOCATION AND SPECIAL HANDLING OR DISPOSAL OF PPCA.

MELMAR INDUSTRIES, LLC
TRACT 11A, BLOCK 12
7002 FURAY RD.

KEYNOTES:

1. ODOR CONTROL UNIT, REF. TO DET. SHT D-39.
2. 34 BOLLARDS AND 2 REMOVABLE BOLLARDS FOR ACCESS TO DETENTION POND. REF TO DET. SHT D-7. PLACE BOLLARS @ 4.0' C-C.
3. PROPOSED ABOVE GROUND DISCHARGE PIPING & VALVES
4. PROPOSED 6' HIGH CHAIN LINK FENCE W/3 STRAND BARBED WIRE & GREEN PVC PRIVACY SLATS, 470 LF, REF TO DET. SHT D-3
5. PROPOSED WATERPROOF ACCESS HATCHES W/SAFETY GRATING (TYP. OF 3)
6. PROPOSED INSTRUMENTATION CONTROL BUILDING W/NEW MCC, REF. TO DET. SHTS D-26 & D-27, (SEE ELECTRICAL SITE PLAN)
7. PROPOSED ELEVATED PLATFORM. REF. TO DET. SHTS D-24 & D-25.
8. REMOVE EXST 24" DIA SWR & REPLACE WITH 15 LF W/30" SAN SWR
9. PROPOSED 8' DIA AUXILIARY WET WELL W/DROP CONNECTION & FLAT TOP SLAB & 18" DIA AIR JUMP. MANHOLE IS TO BE CORROSION RESISTANT.
10. 17 LF OF 24-INCH SAN SWR TO BE CIPP & 5 LF 24-INCH DROP CONNECTION
11. PROP STORM SEWER JUNCTION BOX. REF. TO DET. 02081-06, SHT D-11.
12. 92 LF 24" ARCH DRAIN LINE.
13. PROPOSED HOSE BIB AND ¾" TYPE K COPPER WATER LINE, 71 LF, REF. TO DET 3 SHT D-5.
14. PROPOSED BYPASS PUMPING SSMH (6' DIA) W/FLAT TOP SLAB, REF TO DET. 3 SHT D-7 & D-10.
15. REPLACE 92 LF OF 16" SSFM (SEE COH SPEC 02532)
16. PROPOSED BACKFLOW PREVENTOR, REF. TO DET. 2 SHT D-4.
17. 24' WIDE DOUBLE SWING GATE. (REF. TO DET. SHT D-3).
18. REMOVE & REPLACE 5' DIA CORROSION RESISTANT MH W/TWO 24" DROP CONNECTIONS. REF. TO SPEC. 02082, DET. SHT D-7.
19. 13 LF 24" ARCH RCP STORM SEWER @ 0.49% WITH HEADWALL.
20. PROP. STD. 5' DIA CORROSION RESISTANT SAN SWR MH. REF. TO SPEC. 02082, DET. SHT D-7.
21. 28 LF 19"X30" ELLIPTICAL RCP STORM SEWER @ 0.36%. CONTRACTOR IS TO FIELD VERIFY. 2-HEADWALLS
22. PROPOSED 7" THICK 24' WIDE CONCRETE DRIVEWAY. REF. TO SPEC 02754, DET. SHT D-18.
23. EXISTING FM BY-PASS MH IS "TO REMAIN".
24. PROPOSED YARD LIGHTING, REF. TO SHT E-38
25. STORM SEWER JUNCTION BOX WITH GRATE TOP, REF TO C.O.H. SPEC. 02633 & DET. 02081-06, SHT D-11. CONNECT TO PROPOSED 24" STORM SEWER. CORE 6" DIA. RESTRICTOR HOLE IN BOX AT ELEV. 58.00'.
26. PROP. WATER METER, WITH TYPE K COPPER PIPING. REFER TO DET. 1 SHT D-5
27. PROVIDED 1-INCH WATER TAP ON EXISTING 12-INCH DIA. WATERLINE WITH "LONGSIDE" 1-INCH TYPE K COPPER SERVICE LINE, PER COH SPEC 02511.

NOTE:

1. PROVIDE PROTECTIVE COATING ON ALL INTERIOR CONCRETE SURFACE OF THE WET WELL. REFER TO COH PROTECTIVE COATINGS SPEC. 09901, SYSTEM 108.

NOTE TO OWNER:

1. DETENTION POND MUST DRAIN WITHIN 24 HOURS AFTER A STORM EVENT.
2. OWNER IS RESPONSIBLE FOR DETENTION POND MAINTENANCE.

NO	DATE	REVISION	APPROVED

NOTICE:
FOR YOUR SAFETY, YOU ARE REQUIRED BY TEXAS LAW TO CALL 811 AT LEAST 48 HOURS BEFORE YOU DIG SO THAT UNDERGROUND LINES CAN BE MARKED. THIS SIGNATURE DOES NOT FULFILL YOUR OBLIGATION TO CALL 811

VERIFICATION OF PRIVATE UTILITY LINES

Mike Brower 03/25/26
Date

CenterPoint Energy natural gas utilities shown. (Gas service lines are not shown). This signature not be used for conflict verification.

Signature valid for six months.

Mike Brower 03/25/26
Date

CenterPoint Energy/UNDERGROUND Electrical Facilities Verification ONLY.
(This signature verifies existing underground facilities – not to be used for conflict verification)

Signature valid for six months.

Chris Primrose 3/25/26
Date

Approved for AT&T underground conduit facilities only.
Signature valid for one year.

EJES INCORPORATED
Corporate Office
12801 North Central Expressway, Suite 700
Dallas, Texas 75243
(P) 214-343-1210
(F) 214-343-3885

Houston Office
6161 Savoy Drive, Suite 830
Houston, Tx. 77036
(P) 281-272-1612
(F) 281-272-1619

EJES, Inc., Copyright © 2017
FIRM REGISTRATION No. 2488

SURVEYED BY: AMANI ENGR.
FB NO. P-6335

STATE OF TEXAS
TANITA GILBERT ALEXANDER
88719
LICENSED
PROFESSIONAL ENGINEER
Tanita Gilbert Alexander 3-20-26

CITY OF HOUSTON
HOUSTON PUBLIC WORKS

LIFT STATION REHABILITATION & RECONSTRUCTION CONSENT DECREE

ANNUNCIATION LIFT STATION SITE PLAN

C-32

WBS NUMBER	FOR CITY OF HOUSTON USE ONLY
R-000267-0175-4	
DRAWING SCALE	
1" = 10'	
CITY OF HOUSTON PM	
NP NAWARAJ PANTA, P.E.	
SHEET NO. 158 OF 312	

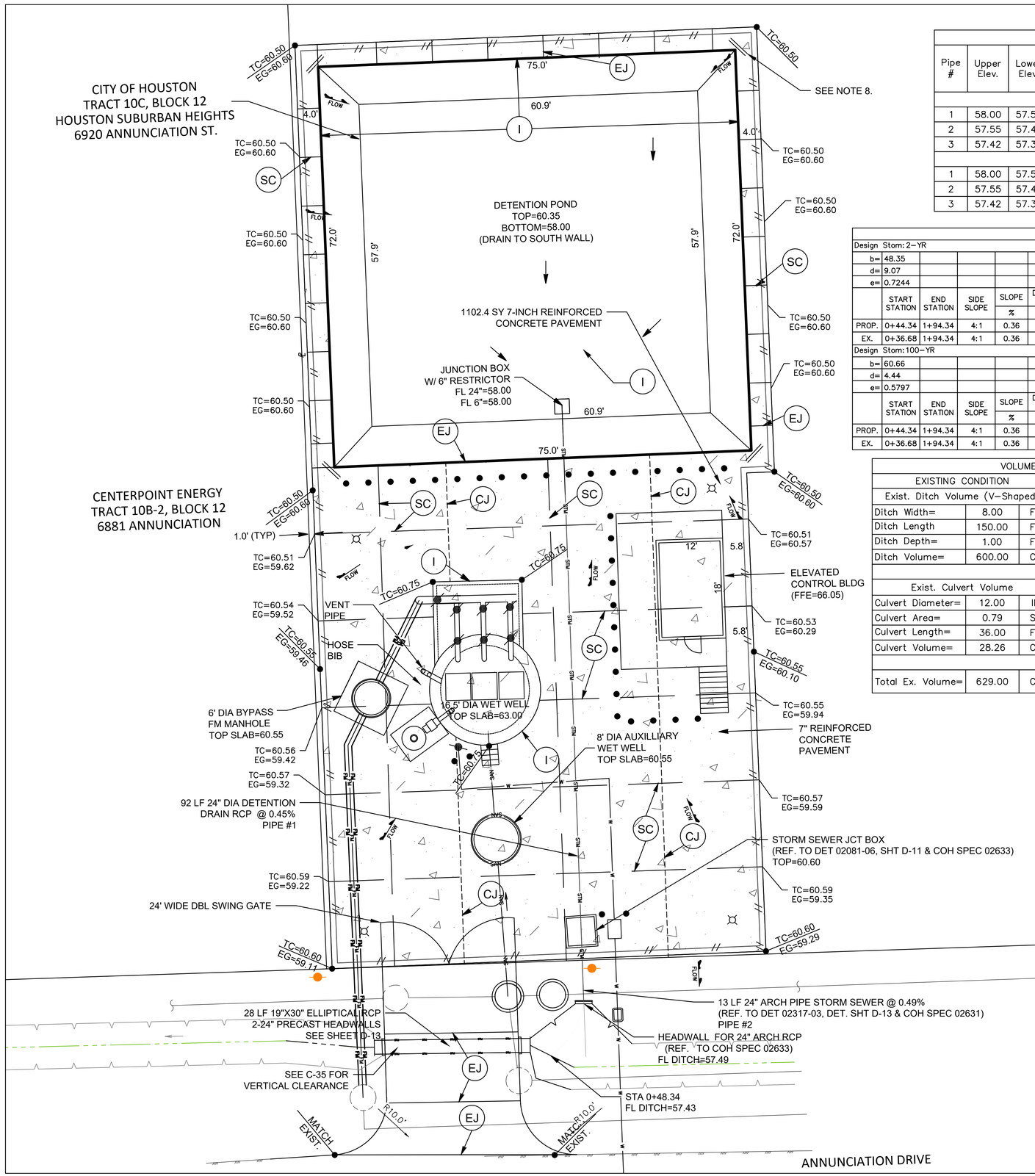

ANNUNCIATION STORM SEWER CALCS.															
Pipe #	Upper Elev.	Lower Elev.	Length (ft)	Slope (ft/ft)	Design Flow (cfs)	Diameter D (ft)	Flow Depth d (ft)	Depth to Pipe Diameter Ratio (d/D)	Flow Area A (sf)	Wetted Perimeter P (ft)	Hydraulic Radius Rh (ft)	Full Flow Velocty v (fps)	Travel Time T (min)	Calculated Flow Rate Qcalc (cfs)	Observed/Design Flow Rate Qdes (cfs)
2–YR															
1	58.00	57.55	92	0.0046	0.38	2	0.22	0.11	0.19	1.35	0.14	4.87	0.31	0.92	0.38
2	57.55	57.49	13	0.0048	0.38	2	0.22	0.11	0.19	1.35	0.14	4.98	0.04	0.94	0.38
3	57.42	57.32	28	0.0036	0.53	2	0.27	0.135	0.25	1.50	0.17	4.31	0.11	1.09	0.53
100–YR															
1	58.00	57.55	92	0.0046	0.85	2	0.32	0.16	0.32	1.65	0.20	4.87	0.31	1.58	0.85
2	57.55	57.49	13	0.0048	0.85	2	0.32	0.16	0.32	1.65	0.20	4.98	0.04	1.61	0.85
3	57.42	57.32	28	0.0036	1.18	2	0.40	0.2	0.45	1.85	0.24	4.31	0.11	1.93	1.18

ROADSIDE DITCH WORKSHEET																
Design Stom: 2–YR																
b= 48.35																
d= 9.07																
e= 0.7244																
	START STATION	END STATION	SIDE SLOPE	SLOPE	DRAINAGE AREA	Runoff Coeff.	Tc	I	Q	DITCH SECT			"n"	"d"	VELOCITY	DITCH LINING	SIDE DRAIN SIZE DIA.
				%	(AC)		(min.)	(In/hr)	(cfs)	FS	BW	BS			(fps)		
PROP.	0+44.34	1+94.34	4:1	0.36	0.10	0.35	21.70	4.04	0.15	4:1	N/A	4:1	0.04	12"	1.36	Grass	19"x30"
EX.	0+36.68	1+94.34	4:1	0.36	0.10	0.35	21.70	4.04	0.15	4:1	N/A	4:1	0.04	12"	1.36	Grass	12"
Design Stom: 100–YR																
b= 60.66																
d= 4.44																
e= 0.5797																
	START STATION	END STATION	SIDE SLOPE	SLOPE	DRAINAGE AREA	Runoff Coeff.	Tc	I	Q	DITCH SECT			"n"	"d"	VELOCITY	DITCH LINING	SIDE DRAIN SIZE DIA.
				%	(AC)		(min.)	(In/hr)	(cfs)	FS	BW	BS			(fps)		
PROP.	0+44.34	1+94.34	4:1	0.36	0.10	0.35	21.70	9.15	0.33	4:1	N/A	4:1	0.04	12"	1.36	Grass	19"x30"
EX.	0+36.68	1+94.34	4:1	0.36	0.10	0.35	21.70	9.15	0.33	4:1	N/A	4:1	0.04	12"	1.36	Grass	12"

VOLUME CALCULATION					
EXISTING CONDITION			PROPOSED CONDITION		
Exist. Ditch Volume (V–Shaped)			Prop. Ditch Volume (V–Shaped)		
Ditch Width=	8.00	FT	Ditch Width=	8.00	FT
Ditch Length	150.00	FT	Ditch Length	158.00	FT
Ditch Depth=	1.00	FT	Ditch Depth=	1.00	FT
Ditch Volume=	600.00	CF	Ditch Volume=	632.00	CF
Exist. Culvert Volume			Prop. Culvert Volume (19"x30")		
Culvert Diameter=	12.00	IN	Culvert Diameter=	24.00	IN
Culvert Area=	0.79	SF	Culvert Area=	3.11	SF
Culvert Length=	36.00	FT	Culvert Length=	28.00	FT
Culvert Volume=	28.26	CF	Culvert Volume=	87.00	CF
Total Ex. Volume=	629.00	CF	Total Prop. Volume=	720.00	CF

LEGEND

- (SC) SAW CUT WITH SEALANT
- (I) ISOLATION JOINT
- (EJ) DOWEL EXPANSION JOINT
- (CJ) KEYED CONSTRUCTION JOINT (DET. D-15 DEFORMED METAL STRIP)
- TC=00.00 TOP OF PAVEMENT ELEV
- DIRECTION OF FLOW

NOTES

1. SEE STANDARD DRAWINGS FOR JOINT DETAILS
2. MATCH DRIVEWAY T.O.C. ELEVATION TO EXISTING STREET PAVEMENT
3. TAPER CURB TO MATCH EXISTING PAVEMENT
4. 7" THICK REINFORCED CONCRETE PAVEMENT WITH 6" THICK 6% LIME STABILIZED SUBGRADE. COH DRAWING NO. 02751–01 & SPEC. 02336 & 02337. SLOPE ALL PAVEMENT TO DETENTION POND. INCLUDES DRIVEWAY
5. PROPERTY OWNER WILL BE RESPONSIBLE FOR MAINTENANCE OF THE DETENTION FACILITY.
6. DRIVEWAY RADII SHALL BE 10.0'.
7. SEE ELECTRICAL SITE PLAN FOR YARD LIGHTING AND SERVICE POLE LOCATIONS.
8. DOUBLE LAYER OF 4' LONG #5 BARS (TOTAL 4 BARS REQUIRED)
9. SEE TYPICAL PAVEMENT SECTION ON SHT D–14 $ DRIVEWAY DETAIL ON SHT D–18.
10. EARTHWORK VOLUMES: TOTAL CUT = 446.18 CY; TOTAL FILL = 197.22

N

0' 5' 10' 20'

SCALE: 1"=10'

NO	DATE	REVISION	APPROVED

NOTICE:
FOR YOUR SAFETY, YOU ARE REQUIRED BY TEXAS LAW TO CALL 811 AT LEAST 48 HOURS BEFORE YOU DIG SO THAT UNDERGROUND LINES CAN BE MARKED. THIS SIGNATURE DOES NOT FULFILL YOUR OBLIGATION TO CALL 811

VERIFICATION OF PRIVATE UTILITY LINES

Mike Brower 04/10/26
Date

CenterPoint Energy natural gas utilities shown. (Gas service lines are not shown). This signature not be used for conflict verification.

Signature valid for six months.

Mike Brower 04/10/26
Date

CenterPoint Energy/UNDERGROUND Electrical Facilities Verification ONLY.
(This signature verifies existing underground facilities – not to be used for conflict verification)

Signature valid for six months.

Chris Primrose 4/16/26
Date

Approved for AT&T underground conduit facilities only.
Signature valid for one year.

EJES INCORPORATED
Corporate Office
12801 North Central Expressway, Suite 700
Dallas, Texas 75243
(P) 214-343-3210
(F) 214-343-3885
Houston Office
8161 Silvery Drive,
Suite 836
Houston, Tx. 77036
(P) 281-272-1612
(F) 281-272-1619
EJES, Inc. Copyright © 2017
FIRM REGISTRATION No. 2488

SURVEYED BY: AMANI ENGR.
FB NO. P–6335

STATE OF TEXAS
TANITA GILBERT ALEXANDER
88719
LICENSED
PROFESSIONAL ENGINEER
4-8-26

CITY OF HOUSTON
HOUSTON PUBLIC WORKS

LIFT STATION REHABILITATION & RECONSTRUCTION CONSENT DECREE

ANNUNCIATION LIFT STATION CONCRETE PAVEMENT & DRAINAGE PLAN
C–33

WBS NUMBER	FOR CITY OF HOUSTON USE ONLY
R–000267–0175–4	
DRAWING SCALE	
1" = 10'	
CITY OF HOUSTON PM	
NP NAWARAJ PANTA, P.E.	
SHEET NO. 159 OF 312	

	Total Drainage Area
2-yr, 24-h Event, (IDM 9.2.01.B.1.a.2), i=	3.91 in/hr
100-yr, 24-h Event, (IDM 9.2.01.B.1.a.2), i=	8.87 in/hr
Surface Area, A=	0.31 Acre
Proposed Impervious Area (Inc. Driveway), A$_I$=	0.31 Acre
Imp. Surface Coeficient (IDM 9.2.01.B.3.a.1), C=	0.31
Q_{2yr} = C x I x A	0.38 ft^3/s
Q_{100yr} = C x I x A	0.85 ft^3/s

Det. Regulations IDM 9.2.01.H.3.e		
Proposed Disturbed Area	0.31	Acre
Proposed Disturbed Impervious Area	0.31	Acre
Existing Impervious Area	0.15	Acre
Exist. Imper. Cover Detention Credit Rate	0.4	Acre-ft/Acre
Exist. Imper. Cover Detention Credit Volume	2,614	Acre-ft
Proposed Impervious Area Detention Rate	0.8	Acre-ft/Acre
Proposed Imper. Vol= (43,560 x (0.8xA*)	10,803	ft^3
Vol Req= V_T=Proposed Vol-Credit Vol	**8,189**	ft^3
Designed Basin Vol: V_D=	**8,256**	ft^3
Discharge Orifices IDM 9.2.01.H.4.b:		
25% Capacity Flow Rate per IDM 9.2.01.H.4.b.1.(a)	0.16	ft^3/s
75% Capacity Flow Rate per IDM 9.2.01.H.4.b.1.(a)	0.62	ft^3/s
Head @25% capacity	0.46	ft
Head @75% capacity	1.39	ft
Q= A_o x C x (2g)$^{0.5}$ x (Head)$^{0.5}$ (at 25% detention capacity)*	0.64	ft^3/s
* The detention volume was calculated base on the proposed disturbed impervious area.		
** Calculated with a 6-in orifice to meet COH criteria		

CENTERPOINT ENERGY
TRACT 10B-2, BLOCK 12
6881 ANNUNCIATION

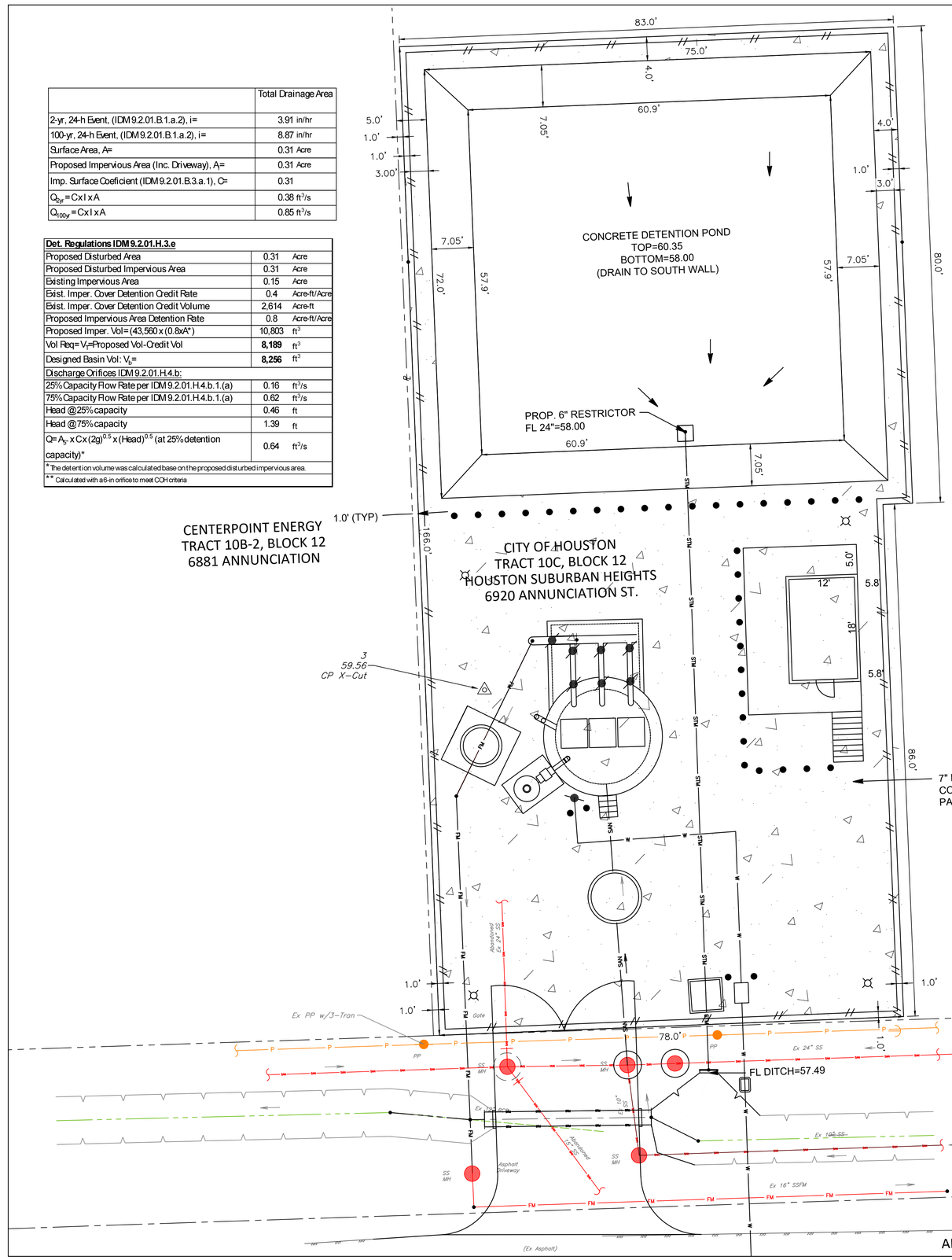

VACANT
LOT

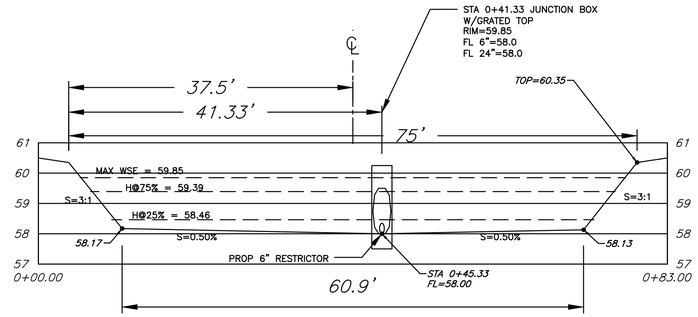

DETENTION POND PROFILE

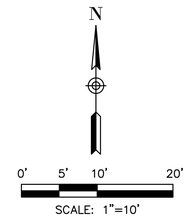

NO	DATE	REVISION	APPROVED

NOTICE:
FOR YOUR SAFETY, YOU ARE REQUIRED BY TEXAS LAW TO CALL 811 AT LEAST 48 HOURS BEFORE YOU DIG SO THAT UNDERGROUND LINES CAN BE MARKED. THIS SIGNATURE DOES NOT FULFILL YOUR OBLIGATION TO CALL 811

VERIFICATION OF PRIVATE UTILITY LINES

Mike Brower — 03/25/26
Date

CenterPoint Energy natural gas utilities shown. (Gas service lines are not shown). This signature not be used for conflict verification.

Signature valid for six months.

Mike Brower — 03/25/26
Date

CenterPoint Energy/UNDERGROUND Electrical Facilities Verification ONLY.
(This signature verifies existing underground facilities – not to be used for conflict verification)

Signature valid for six months.

Chris Primrose — 3/25/26
Date

Approved for AT&T underground conduit facilities only.
Signature valid for one year.

EJES INCORPORATED
Corporate Office
12801 North Central Expressway, Suite 700
Dallas, Texas 75243
(P) 214-343-1210
(F) 214-343-3885
Houston Office
6161 Savoy Drive, Suite 830
Houston, Tx. 77036
(P) 281-272-1612
(F) 281-272-1619

EJES, Inc. Copyright © 2017
FIRM REGISTRATION No. 2488

SURVEYED BY: AMANI ENGR.
FB NO. P-6335

STATE OF TEXAS
TANITA GILBERT ALEXANDER
88719
LICENSED
PROFESSIONAL ENGINEER
3-20-26

CITY OF HOUSTON
HOUSTON PUBLIC WORKS

LIFT STATION REHABILITATION & RECONSTRUCTION
CONSENT DECREE

ANNUNCIATION LIFT STATION
SITE DETENTION PLAN

C-34

WBS NUMBER	FOR CITY OF HOUSTON USE ONLY
R-000267-0175-4	
DRAWING SCALE	
1" = 10'	
CITY OF HOUSTON PM	
NP NAWARAJ PANTA, P.E.	
SHEET NO. 160 OF 312	

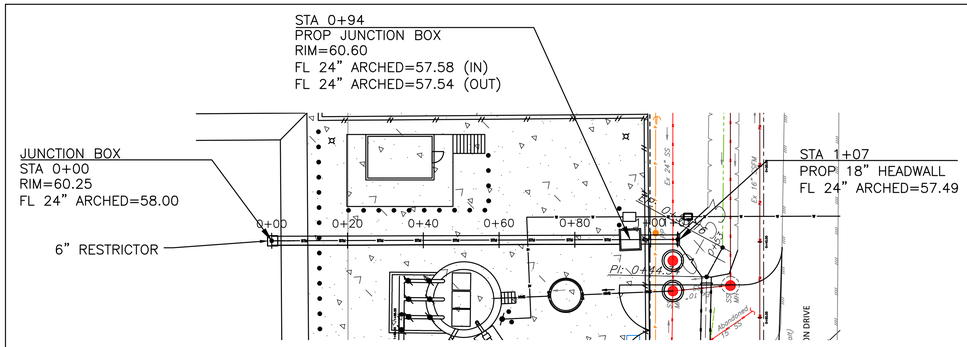

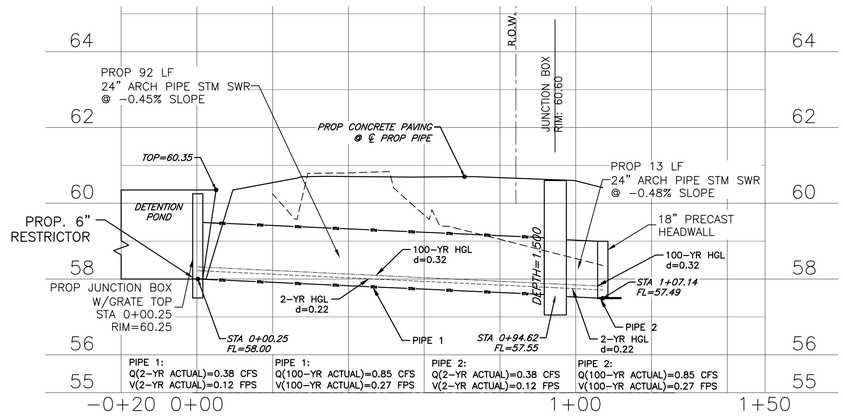

PLAN AND PROFILE FROM DETENTION POND TO PRECAST HEADWALL

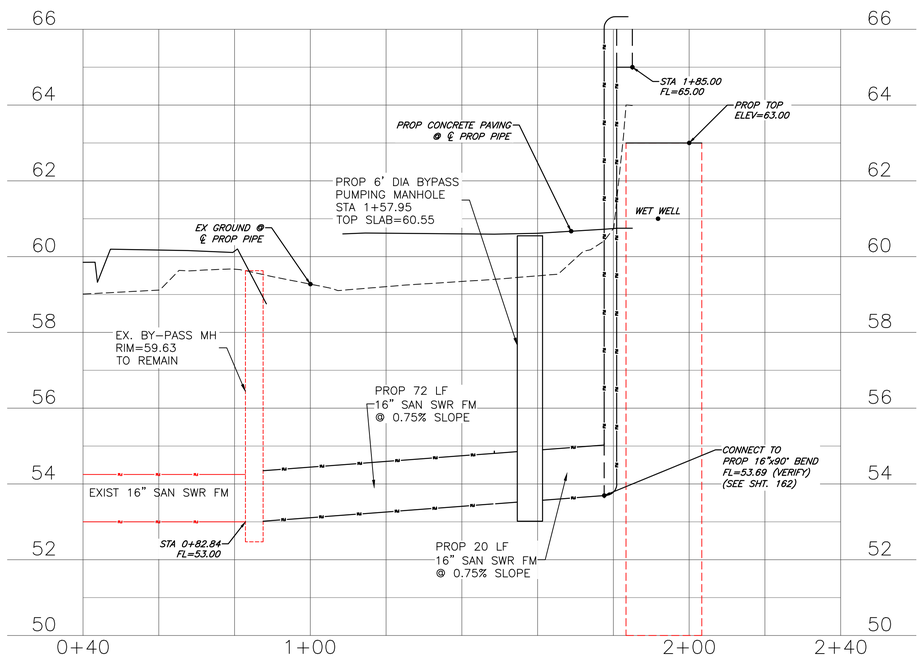

PROFILE FROM EX SAN SWR TO PROP SAN SWR FM

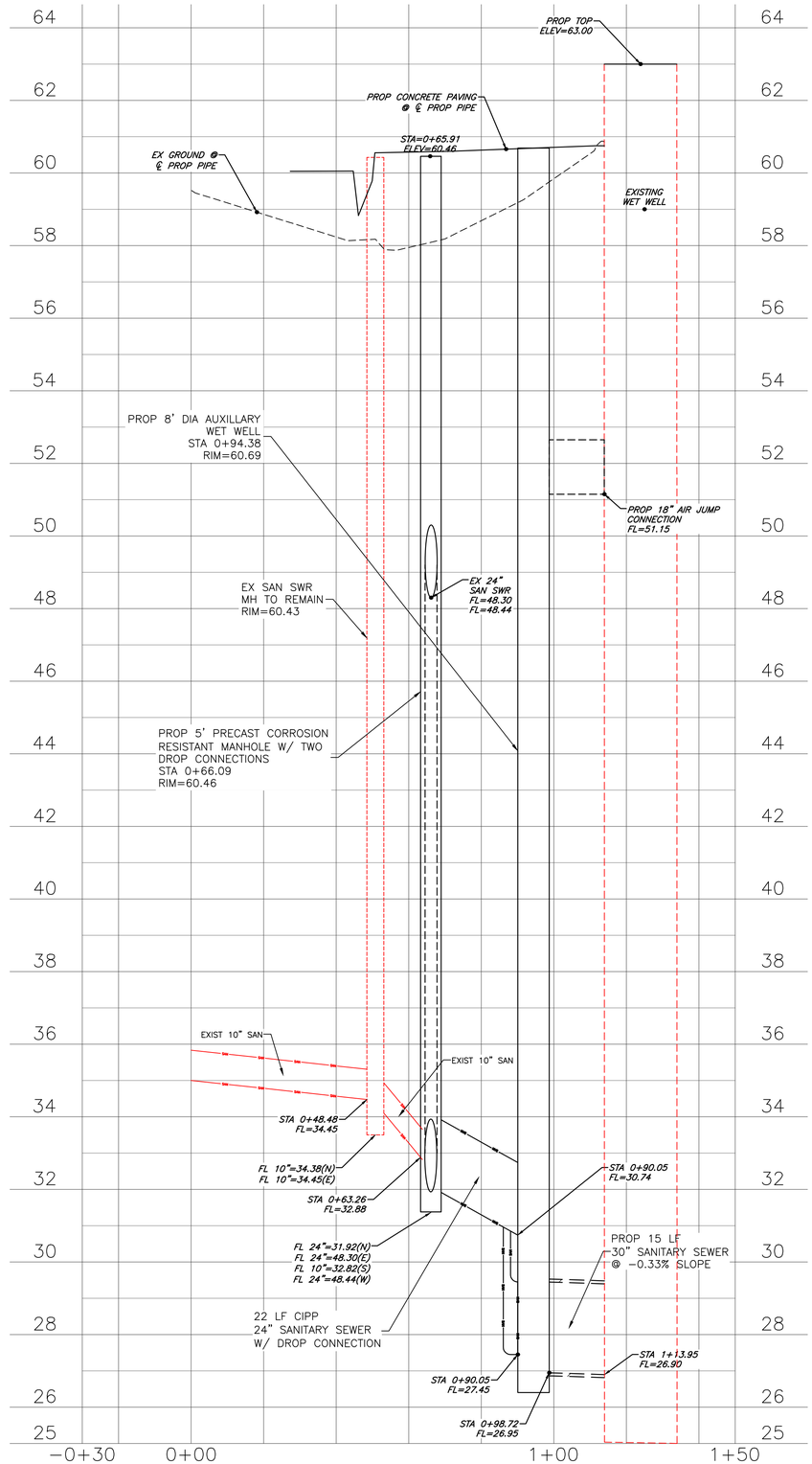

PROFILE FROM EX SAN SWR TO WET WELL

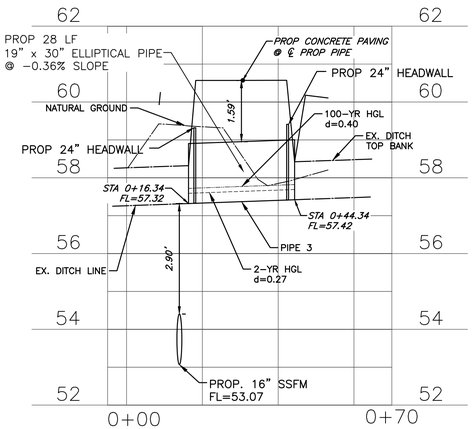

19"X30" ELLIPTICAL PIPE PROFILE IN DRIVEWAY

0' 10' 20' 40'

SCALE: 1"=20' H
SCALE: 1"=2' V

NO	DATE	REVISION	APPROVED

NOTICE:
FOR YOUR SAFETY, YOU ARE REQUIRED BY TEXAS LAW TO CALL 811 AT LEAST 48 HOURS BEFORE YOU DIG SO THAT UNDERGROUND LINES CAN BE MARKED. THIS SIGNATURE DOES NOT FULFILL YOUR OBLIGATION TO CALL 811

VERIFICATION OF PRIVATE UTILITY LINES

Mike Brower — 03/25/26
Date

CenterPoint Energy natural gas utilities shown. (Gas service lines are not shown). This signature not be used for conflict verification.

Signature valid for six months.

Mike Brower — 03/25/26
Date

CenterPoint Energy/UNDERGROUND Electrical Facilities Verification ONLY.
(This signature verifies existing underground facilities – not to be used for conflict verification)

Signature valid for six months.

Chris Primrose — 3/25/26
Date

Approved for AT&T underground conduit facilities only.
Signature valid for one year.

EJES
INCORPORATED
Corporate Office
12801 North Central Expressway, Suite 700
Dallas, Texas 75243
(P) 214-343-1310
(F) 214-343-3885
Houston Office
6161 Savoy Drive, Suite 830
Houston, Tx. 77036
(P) 281-272-1612
(F) 281-272-1619
EJES, Inc. Copyright © 2017
FIRM REGISTRATION No. 2488

SURVEYED BY: AMANI ENGR.
FB NO. P-6335

STATE OF TEXAS
TANITA GILBERT ALEXANDER
88719
LICENSED
PROFESSIONAL ENGINEER
3-20-26

CITY OF HOUSTON
HOUSTON PUBLIC WORKS

LIFT STATION REHABILITATION & RECONSTRUCTION
CONSENT DECREE

ANNUNCIATION LIFT STATION YARD PIPING PROFILE

C-35

WBS NUMBER	FOR CITY OF HOUSTON USE ONLY
R-000267-0175-4	
DRAWING SCALE	
1" = 20'	
CITY OF HOUSTON PM	
NP NAWARAJ PANTA, P.E.	
SHEET NO. 161 OF 312	

N

SCALE: 1"=2'

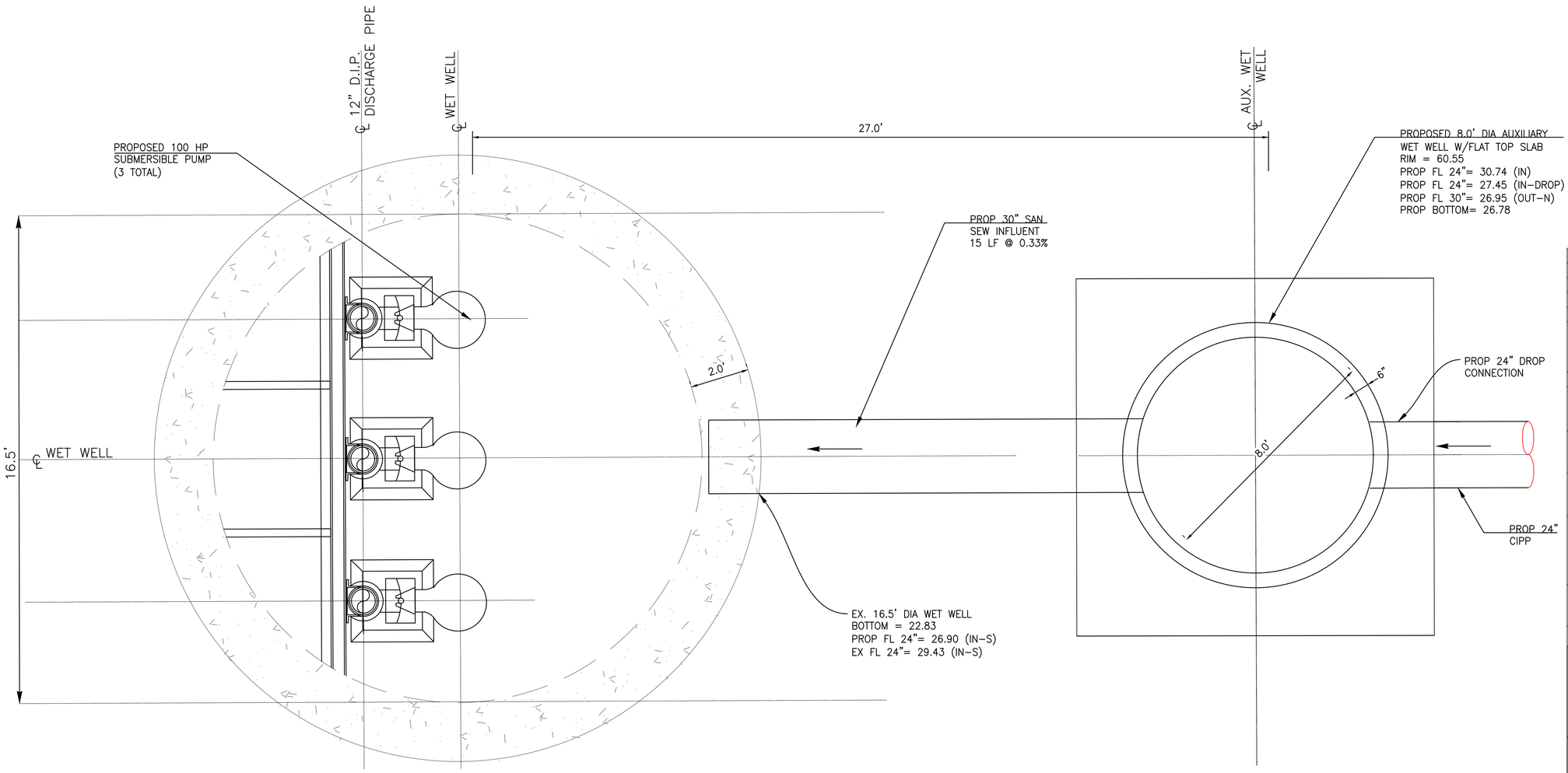

PLAN VIEW - LOWER LEVEL OF WET WELL

NO	DATE	REVISION	APPROVED

NOTICE:
FOR YOUR SAFETY, YOU ARE REQUIRED BY TEXAS LAW TO CALL 811 AT LEAST 48 HOURS BEFORE YOU DIG SO THAT UNDERGROUND LINES CAN BE MARKED. THIS SIGNATURE DOES NOT FULFILL YOUR OBLIGATION TO CALL 811

VERIFICATION OF PRIVATE UTILITY LINES

Mike Brower 02/17/26
Date

CenterPoint Energy natural gas utilities shown. (Gas service lines are not shown). This signature not be used for conflict verification.

Signature valid for six months.

Mike Brower 02/17/26
Date

CenterPoint Energy/UNDERGROUND Electrical Facilities Verification ONLY.
(This signature verifies existing underground facilities – not to be used for conflict verification)

Signature valid for six months.

Elvina Allison 02/18/2026
Date

Approved for AT&T underground conduit facilities only.
Signature valid for one year.

EJES INCORPORATED
Corporate Office
12801 North Central Expressway, Suite 700
Dallas, Texas 75243
(P) 214-343-1210
(F) 214-343-3885

Houston Office
6161 Savoy Drive, Suite 830
Houston, Tx. 77036
(P) 281-272-1612
(F) 281-272-1619

EJES, Inc. Copyright © 2017
FIRM REGISTRATION No. 2488

SURVEYED BY: AMANI ENGR.
FB NO. P-6335

STATE OF TEXAS
TANITA GILBERT ALEXANDER
88719
LICENSED PROFESSIONAL ENGINEER
5-20-26
Tanita Gilbert Alexander

CITY OF HOUSTON
HOUSTON PUBLIC WORKS

LIFT STATION REHABILITATION & RECONSTRUCTION CONSENT DECREE

ANNUNCIATION LIFT STATION WET WELL – PLAN

M-10

WBS NUMBER	FOR CITY OF HOUSTON USE ONLY
R-000267-0175-4	
DRAWING SCALE	
1" = 2'	
CITY OF HOUSTON PM	
NP NAWARAJ PANTA, P.E.	
SHEET NO. 162 OF 312	

SCALE: 1"=3'

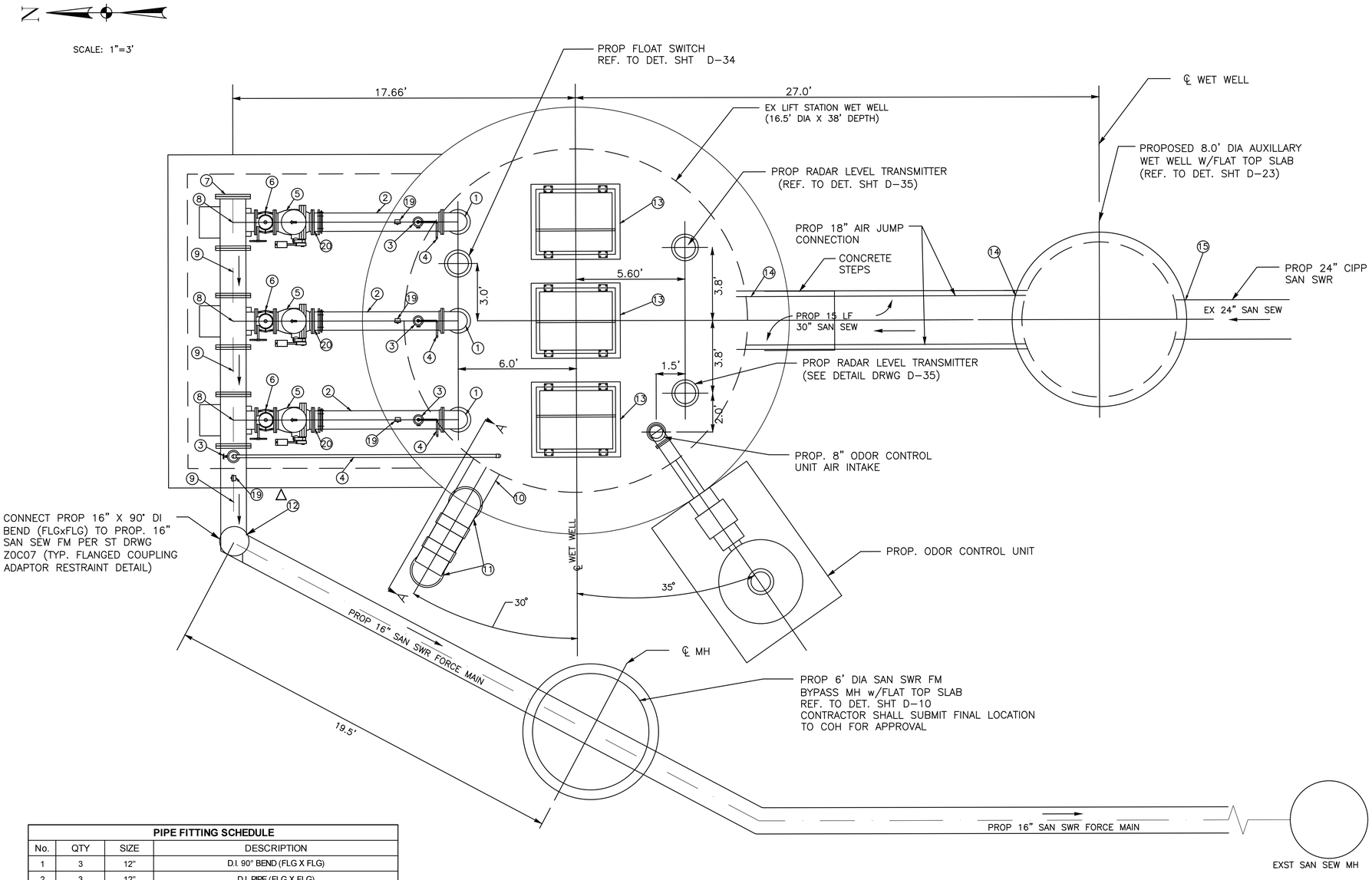

PLAN @ GRADE

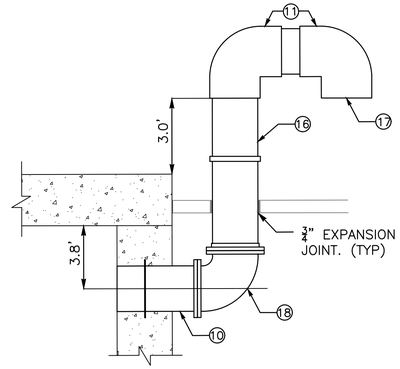

VENT PIPE DETAIL
NTS

PIPE FITTING SCHEDULE			
No.	QTY	SIZE	DESCRIPTION
1	3	12"	D.I. 90° BEND (FLG X FLG)
2	3	12"	D.I. PIPE (FLG X FLG)
3	4	2"	AIR & VACUUM VALVE
4	4	1"	SS AIR RELEASE DRAIN LINE
5	3	12"	SWING CHECK VALVE (FLG X FLG)
6	3	12"	PLUG VALVE (FLG X FLG)
7	1	16"	BLIND FLANGE
8	3	16" X 12"	D.I. REDUCING TEE (FLG)
9	3	16"	D.I. PIPE (FLG X FLG)
10	1	20"	D.I. WALL PIPE W/WATERSTOP COLLAR (PE X FLG)
11	2	20"	316 SS 90° BEND W/WELDED
12	2	16"	D.I. 90° BEND (FLG X FLG)
13	3	3' X 4'	DOUBLE LEAF HATCH ACCESS WITH POWDER COATED ALUMINIUM SAFETY GRATING
14	2	30"	D.I. WALL PIPE W/WATERSTOP COLLAR (PE X P. ON)
15	2	24"	D.I. WALL PIPE W/WATERSTOP COLLAR (PE X P. ON)
16	1	20"	316 SS PIPE (FLG X THREADED/WELDED)
17	1	20"	SS BIRD SCREEN
18	1	20"	216 SS 90° BEND (FLG X FLG)
19	4	1/4"	PRESSURE GAUGE
20	9	12"	RESTRAINED FLANGE COUPLING ADAPTER

NO	DATE	REVISION	APPROVED

NOTICE:
FOR YOUR SAFETY, YOU ARE REQUIRED BY TEXAS LAW TO CALL 811 AT LEAST 48 HOURS BEFORE YOU DIG SO THAT UNDERGROUND LINES CAN BE MARKED. THIS SIGNATURE DOES NOT FULFILL YOUR OBLIGATION TO CALL 811

VERIFICATION OF PRIVATE UTILITY LINES

Mike Brower 03/25/26
Date

CenterPoint Energy natural gas utilities shown. (Gas service lines are not shown). This signature not be used for conflict verification.

Signature valid for six months.

Mike Brower 03/25/26
Date

CenterPoint Energy/UNDERGROUND Electrical Facilities Verification ONLY.
(This signature verifies existing underground facilities – not to be used for conflict verification)

Signature valid for six months.

Chris Primrose 3/25/26
Date

Approved for AT&T underground conduit facilities only.
Signature valid for one year.

EJES INCORPORATED
Corporate Office
12801 North Central Expressway, Suite 1000
Dallas, Texas 75243
(P) 214-343-3210
(F) 214-343-3885

Houston Office
6161 Savoy Drive, Suite 1125
Houston, Tx. 77036
(P) 281-272-1612
(F) 281-272-1619

EJES, Inc. Copyright © 2017
FIRM REGISTRATION No. 2488

SURVEYED BY: AMANI ENGR.
FB NO. P-6335

STATE OF TEXAS
TANITA GILBERT ALEXANDER
88719
LICENSED
PROFESSIONAL ENGINEER
3-20-26

CITY OF HOUSTON
HOUSTON PUBLIC WORKS

LIFT STATION REHABILITATION & RECONSTRUCTION
CONSENT DECREE

ANNUNCIATION LIFT STATION WET WELL – PIPING PLAN

M-11

WBS NUMBER	FOR CITY OF HOUSTON USE ONLY
R-000267-0175-4	
DRAWING SCALE	
1" = 3'	
CITY OF HOUSTON PM	
NP NAWARAJ PANTA, P.E.	
SHEET NO. 163 OF 312	

STATION OPERATION TABLES			
Rising Level Cycle			
Water Level Depth	**Water Level Elevation**	**Action**	**Pump(s) in Operation**
4.08'	26.91	Pump Off Level - No Action	All Pumps Are Off
4.63'	27.46	Lead Pump Turns On	Lead Pump On
6.42'	29.25	Second Pump Turns On	Lead & Second Pumps On
7.42'	30.25	High Water Alarm On	High Water Alarm Sound
7.92	30.75	High High Level Alarm On (Float On Level)	All Duty Pumps On (Floats)
Falling Level Cycle			
Water Level Depth	**Water Level Elevation**	**Action**	**Pump(s) in Operation**
4.08	26.91	Float Off Level	All Pumps Off Floats
6.92'	29.75	High Water Level Alarm Off	Lead & Second Pumps On
6.42'	29.25	Lead Pump Turns Off	Second Pump Is On
3.58'	26.41	Low Level Alarm (Second Pump Turns Off)	All Pumps Stopped - Standby Pump Switches To Lead Pump

NOTES

1. DIMENSIONS NOTED ARE RELATIVE TO THE PUMP SIZE AND MANUFACTURER SELECTED. CONTRACTOR SHALL CONFIRM.
2. SEE DETAIL AND STRUCTURAL DRAWINGS FOR DIMENSIONS AND INFORMATION NOT SHOWN.
3. PUMP ANCHOR BOLTS ARE TO BE ADHESIVE TYPE, AND EMBEDDED IN CONCRETE SLAB. CONTRACTOR TO SUBMIT DESIGN OF PUMP ANCHOR BOLTS AND PATTERN, INCLUDING CALCULATIONS, DURING SHOP DRAWING SUBMISSION.
4. ALL PIPING IN THE WET WELL SHALL BE FLANGED. NO FLANGED COUPLING ADAPTORS, OR VICTAULIC STYLE COUPLINGS SHALL BE PERMITTED INSIDE THE WET WELL.
5. PROTECTIVE COATING IS APPLIED FOR ALL THE PIPES, FITTINGS AND EQUIPMENT WITHIN THE WET WELL.
6. REMOVE & REPLACE ALL PIPING & HARDWARE INSIDE WET WELL.
7. PAINTED ACCESS HATCHES FOREST GREEN.
8. ODOR CONTROL AIR INTAKE NOT SHOWN FOR CLARITY.

PIPE FITTING SCHEDULE			
No.	QTY	SIZE	DESCRIPTION
1	3	12"	D.I. 90° BEND (FLG X FLG)
2	3	2"	AIR & VACUUM VALVE
3	3	12"	D.I. PIPE (FLG X FLG)
4	3	12"	SWING CHECK VALVE (FLG X FLG)
5	3	12"	PLUG VALVE (FLG X FLG)
6	3	16" X 12"	D.I. REDUCING TEE (FLG)
7	1	16"	D.I. PIPE (FLG X FLG)
8	1	16"	D.I. 90° BEND (FLG X FLG)
9	2	16"	D.I. WALL PIPE W/WATERSTOP COLLAR (FLG X FLG)
10	1	16"	TEE (FLG)
11	3	12"	D.I. WALL PIPE W/WATERSTOP COLLAR (FLG X FLG)
12	3	12"	D.I. 45° BEND (FLG X FLG)
13	3	12" X 10"	D.I. REDUCER (FLG X FLG)
14	2	18"	D.I. WALL PIPE W/WATERSTOP COLLAR (PE X P. ON)
15	1	18"	D.I. PIPE (FLG X FLG)
16	2	30"	D.I. WALL PIPE W/WATERSTOP COLLAR (PE X P. ON)
17	1	30"	D.I. PIPE (FLG X FLG)
18	4	1/4"	PRESSURE GAUGE
19	9	12"	RESTRAINED FLANGE COUPLING ADAPTER

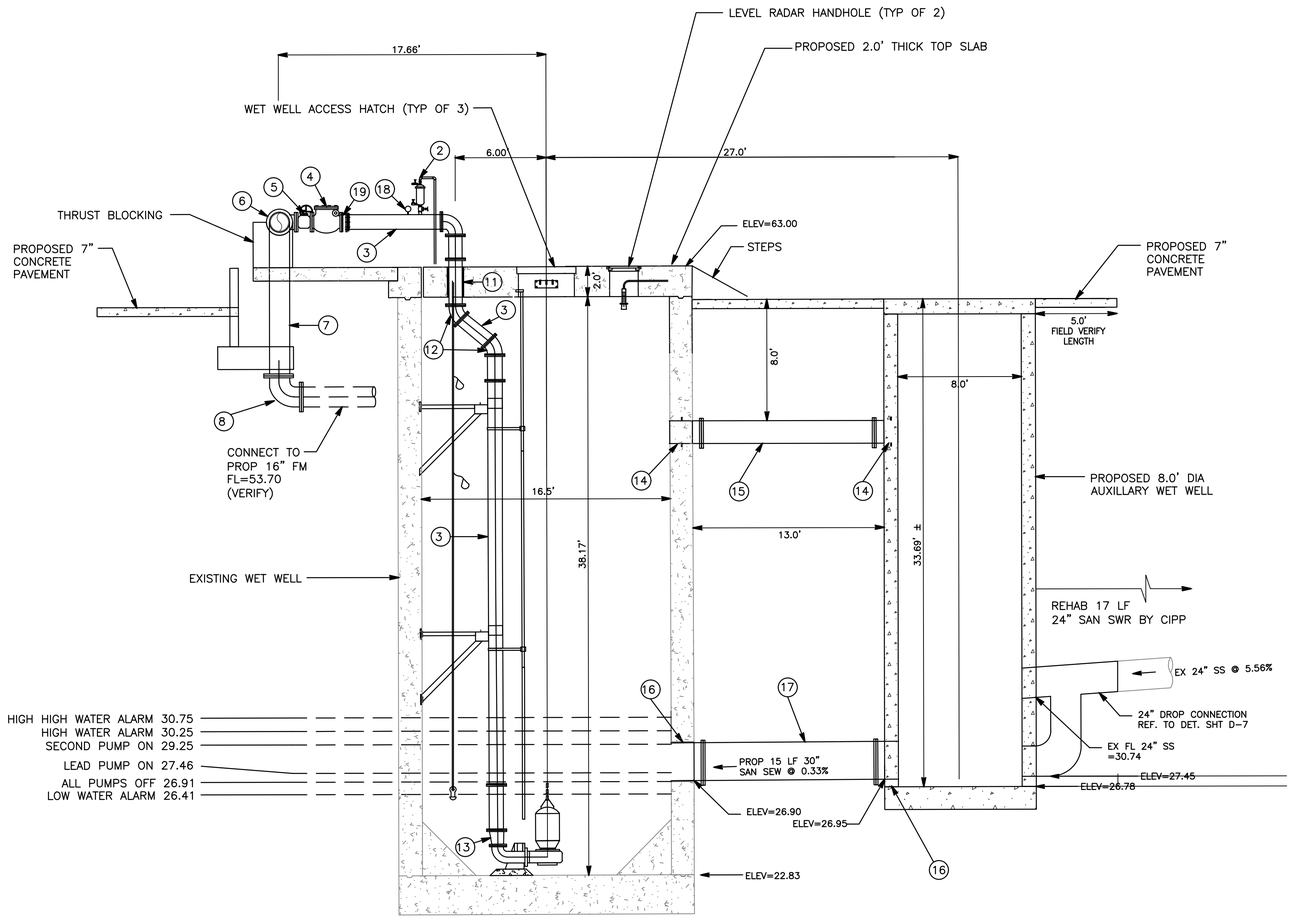

SECTION

WET WELL & AUXILLARY WET WELL

NO	DATE	REVISION	APPROVED

NOTICE:
FOR YOUR SAFETY, YOU ARE REQUIRED BY TEXAS LAW TO CALL 811 AT LEAST 48 HOURS BEFORE YOU DIG SO THAT UNDERGROUND LINES CAN BE MARKED. THIS SIGNATURE DOES NOT FULFILL YOUR OBLIGATION TO CALL 811

VERIFICATION OF PRIVATE UTILITY LINES

Mike Brower 03/25/26
Date

CenterPoint Energy natural gas utilities shown. (Gas service lines are not shown). This signature not be used for conflict verification.

Signature valid for six months.

Mike Brower 03/25/26
Date

CenterPoint Energy/UNDERGROUND Electrical Facilities Verification ONLY.
(This signature verifies existing underground facilities – not to be used for conflict verification)

Signature valid for six months.

Chris Primrose 3/25/26
Date

Approved for AT&T underground conduit facilities only.
Signature valid for one year.

EJES INCORPORATED
Corporate Office
12801 North Central Expressway, Suite 700
Dallas, Texas 75243
(P) 214-343-1210
(F) 214-343-3885
Houston Office
6161 Savoy Drive, Suite 830
Houston, Tx. 77036
(P) 281-272-1612
(F) 281-272-1619

EJES, Inc. Copyright © 2017
FIRM REGISTRATION No. 2488

SURVEYED BY: AMANI ENGR.
FB NO. P-6335

STATE OF TEXAS
TANITA GILBERT ALEXANDER
88719
LICENSED PROFESSIONAL ENGINEER
3-20-26

CITY OF HOUSTON

HOUSTON PUBLIC WORKS

LIFT STATION REHABILITATION & RECONSTRUCTION CONSENT DECREE

ANNUNCIATION LIFT STATION WET WELL – SECTION

M-12

WBS NUMBER	FOR CITY OF HOUSTON USE ONLY
R-000267-0175-4	
DRAWING SCALE	
SCALE: 1"=5'	
CITY OF HOUSTON PM	
NP NAWARAJ PANTA, P.E.	
SHEET NO. 164 OF 312	

ANNUNCIATION LIFT STATION - 100 HP Pumps
SYSTEM & PUMP CURVES

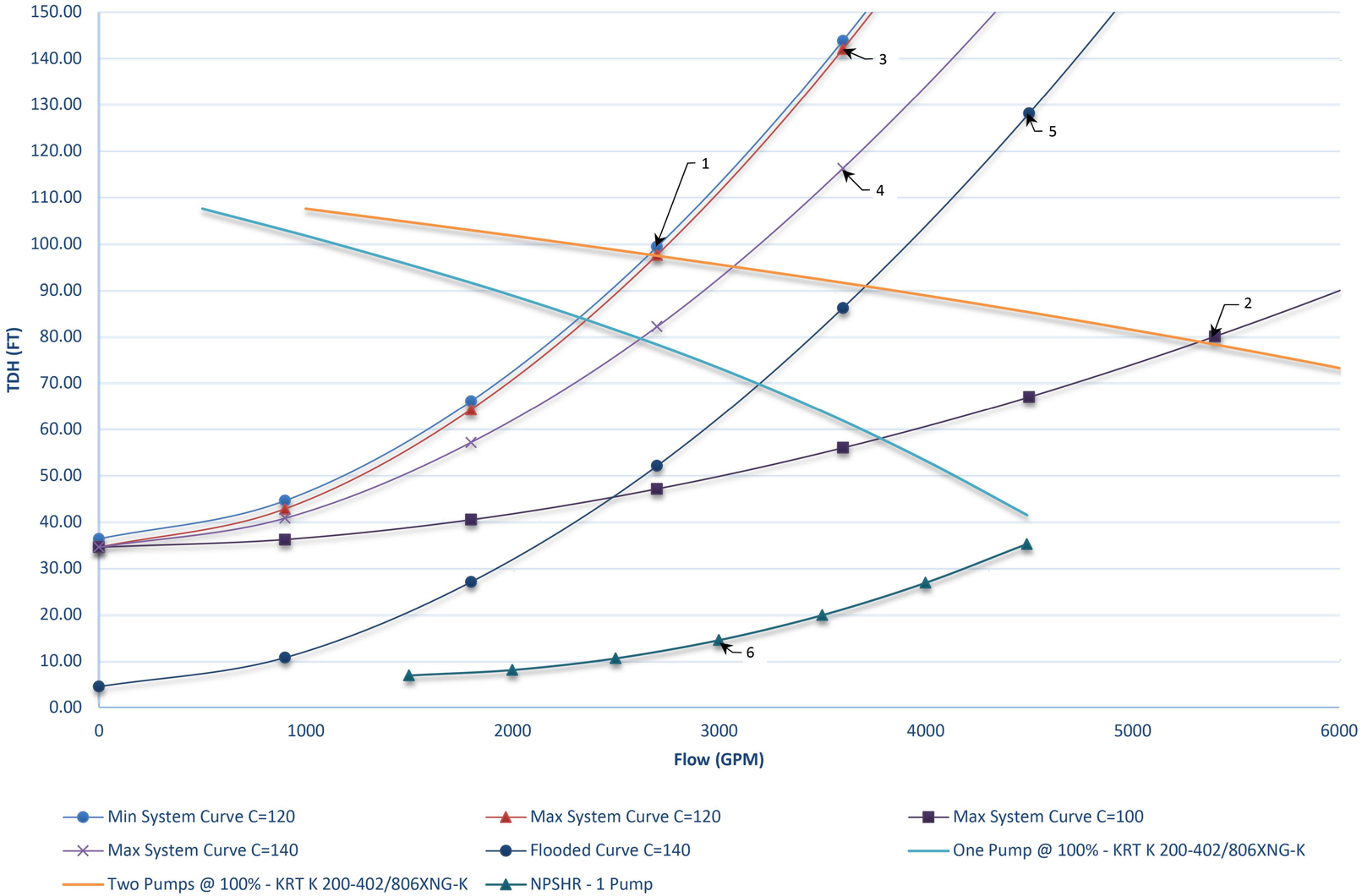

PUMP DATA TABLE			
PUMP CHARACTERISTICS	PUMP 1	PUMP 2	PUMP 3
Motor Data			
Nominal Size (hp)	100	100	100
Max Speed (rpm)	1189	1189	1189
Solids Passage			
Min Sphere (in)	3	3	3
Capacity (gpm)			
Design	1250	1250	1250
Runout	2530	2530	2530
Disharge Head (ft)			
Design	99	99	99
Runout	44.7	44.7	44.7
Shutoff	138	138	138
Efficiency (%)			
Design	63.9	63.9	63.9
NPSHA (ft)			
Design	6.53	6.53	6.53
Runout	35	35	35
Pump Cycle Time (min)	10	10	10
Cumulative Capacity (gpm)	2290	2620	--

NO	DATE	REVISION	APPROVED

NOTICE:
FOR YOUR SAFETY, YOU ARE REQUIRED BY TEXAS LAW TO CALL 811 AT LEAST 48 HOURS BEFORE YOU DIG SO THAT UNDERGROUND LINES CAN BE MARKED. THIS SIGNATURE DOES NOT FULFILL YOUR OBLIGATION TO CALL 811

VERIFICATION OF PRIVATE UTILITY LINES

Date

CenterPoint Energy natural gas utilities shown. (Gas service lines are not shown). This signature not be used for conflict verification.

Signature valid for six months.

Date

CenterPoint Energy/UNDERGROUND Electrical Facilities Verification ONLY.
(This signature verifies existing underground facilities – not to be used for conflict verification)

Signature valid for six months.

Date

Approved for AT&T underground conduit facilities only.
Signature valid for one year.

EJES
INCORPORATED
Corporate Office
12801 North Central Expressway, Suite 700
Dallas, Texas 75243
(P) 214-343-1210
(F) 214-343-3885

Houston Office
6161 Savoy Drive, Suite 830
Houston, Tx. 77036
(P) 281-272-1612
(F) 281-272-1619

EJES, Inc. Copyright © 2017
FIRM REGISTRATION No. 2488

SURVEYED BY: AMANI ENGR.
FB NO. P-6335

STATE OF TEXAS
TANITA GILBERT ALEXANDER
88719
LICENSED
PROFESSIONAL ENGINEER
5-20-26

CITY OF HOUSTON
HOUSTON PUBLIC WORKS

LIFT STATION REHABILITATION & RECONSTRUCTION
CONSENT DECREE

ANNUNCIATION LIFT STATION
WET WELL – PUMP CURVE DATA

M-13

PUMP CURVE NOTES:

1. LOW NORMAL OPERATING LEVEL C=120 – DESIGN.
2. HIGH NORMAN OPERATING LEVEL C=100 – INFORMATION ONLY (TCEQ).
3. HIGH NORMAL OPERATING LEVEL C=120 – DESIGN.
4. HIGH NORMAL OPERATING LEVEL C=140 INFORMATION ONLY.
5. EMERGENCY FLOODED OPERATING LEVEL C=140 – MAXIMUM DISCHARGE.
6. NET POSITIVE HEAD SUCTION REQUIRED (NPSHR) BASED ON NORMAL OPERATING WATER LEVEL.

WBS NUMBER	FOR CITY OF HOUSTON USE ONLY
R-000267-0175-4	
DRAWING SCALE	
SCALE: NONE	
CITY OF HOUSTON PM	
NP NAWARAJ PANTA, P.E.	
SHEET NO. 165 OF 312	

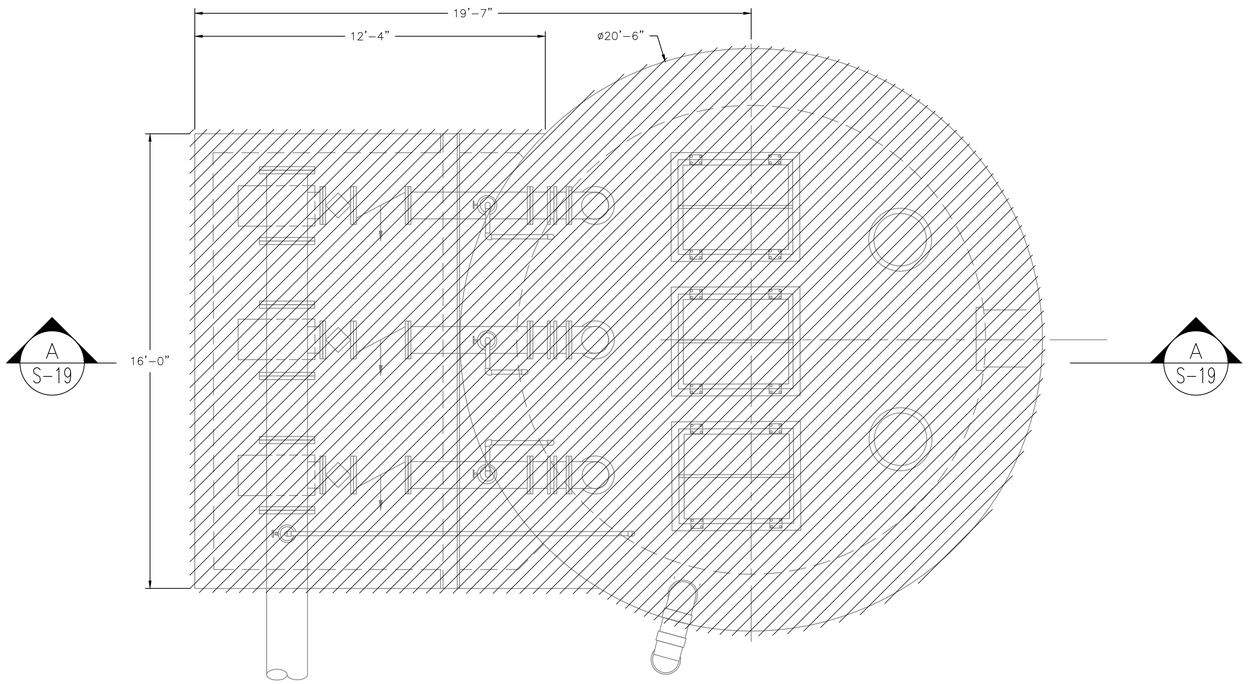

DEMOLITION PLAN @ EL 60.83

0 2' 4' 6' SCALE: 3/8"=1'-0"

NO.	DATE	REVISION	APP.

DEMOLITION NOTES:

1. BACKGROUND OF THIS DRAWING IS BASED ON RECORD DRAWING NO. 32524. CONTRACTOR SHALL BE RESPONSIBLE FOR VERIFYING EXISTING CONDITIONS PRIOR TO SUBMITTING BID.
2. THE CITY OF HOUSTON (COH) HAS THE FIRST RIGHT OF REFUSAL OF ANY EQUIPMENT OR MATERIAL REMOVED. CONTACT CONSTRUCTION MANAGER AT LEAST 72 HOURS PRIOR TO DEMOLITION IN ORDER TO SALVAGED ITEMS TO A LOCATION WITHIN THE CITY. THE CONTRACTOR SHALL PROPERLY DISPOSE OF ALL OTHER MATERIAL NOT IDENTIFIED FOR SALVAGE.
3. EXISTING WET WELL SHALL BE CLEANED OF ALL DEBRIS, WASTEWATER DEMOLITION WASTE AND OTHER RESIDUES BY CITY OF HOUSTON APPROVED CERTIFIED DISPOSAL CONTRACTOR .
4. CONTRACTOR SHALL OBTAIN CITY OF HOUSTON DEMOLITION PERMIT OR SUBMIT PROOF OF NON-APPLICABILITY TO COH CONSTRUCTION PROJECT MANAGER PRIOR TO THE DEMOLITION ACTIVITIES AT THE SITE.
5. DO NOT DISTURB ANY EXISTING STRUCTURE THAT ABUTS A STRUCTURE TO BE REMOVED. ANY DAMAGES TO STRUCTURES THAT ARE NOT INDICATED TO BE DEMOLISHED/REMOVED, OR THAT ARE OUTSIDE OF THE CONSTRUCTION LIMITS SHALL BE REPAIRED AT NO ADDITIONAL COST TO THE CITY AND AT NO COST TO THE PROPERTY OWNER.

LEGEND:

TO BE DEMOLISHED

ARCADIS
Infrastructure · Water · Environment · Buildings
1330 Post Oak Blvd, Suite 250
Houston, TX 77056
Tel: 713-953-4800
Fax: 713-977-4620
www.arcadis.com
Texas Registered Engineering Firm F-533

SURVEYED BY: AMANI ENGR.
FB NO. P-6335

STATE OF TEXAS
TANVIR HOSSAIN
121767
LICENSED PROFESSIONAL ENGINEER

CITY OF HOUSTON
HOUSTON PUBLIC WORKS

LIFT STATION REHABILITATION & RECONSTRUCTION CONSENT DECREE

ANNUNCIATION LIFT STATION WET WELL DEMOLITION PLAN

S-18

WBS NUMBER	FOR CITY OF HOUSTON USE ONLY
R-000267-0175-4	
DRAWING SCALE	
AS NOTED	
CITY OF HOUSTON PM	
NP NAWARAJ PANTA, P.E.	
SHEET NO. 166 OF 312	

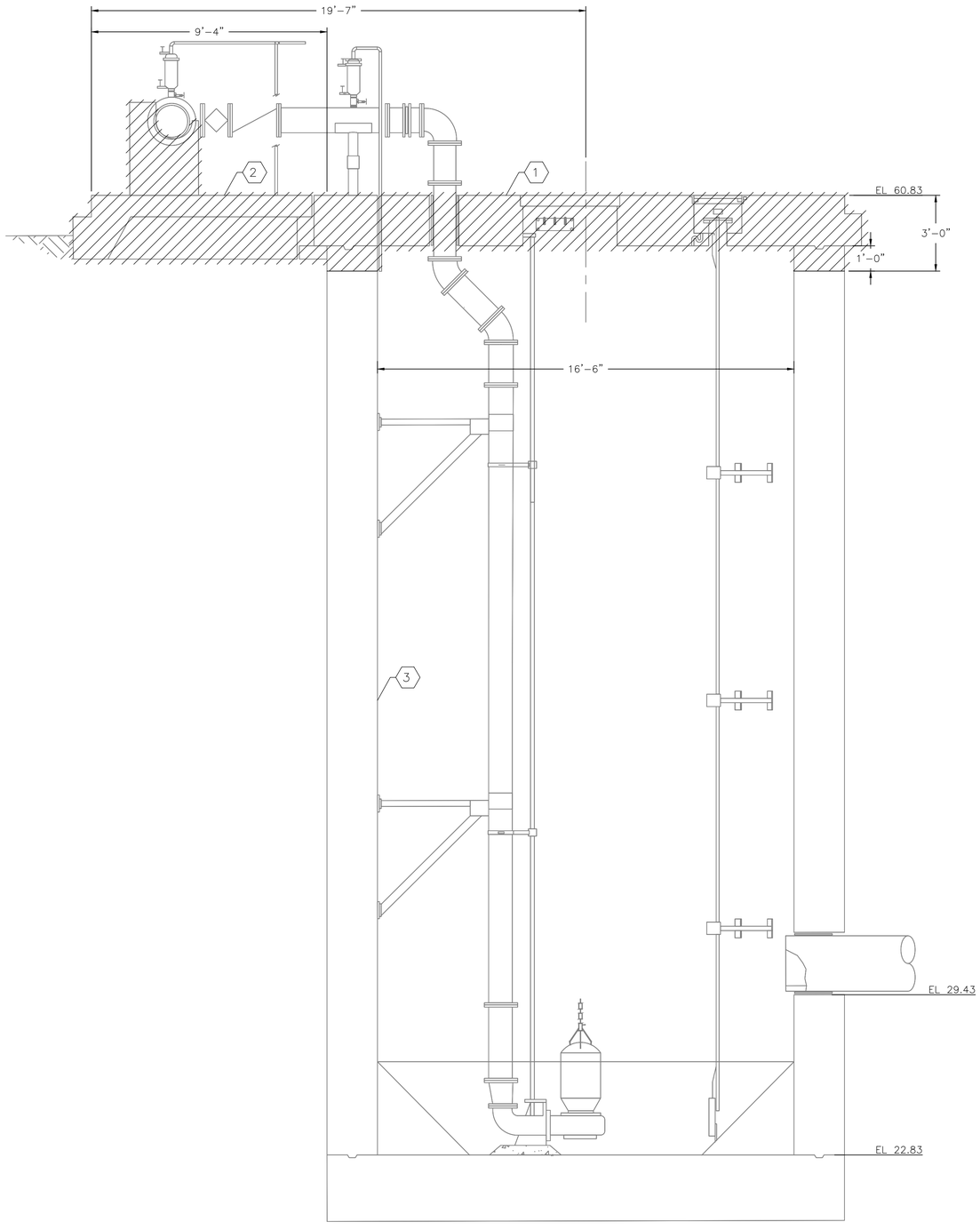

A SECTION

SCALE: 3/8"=1'-0"

0 2' 4' 6'

NO.	DATE	REVISION	APP.

DEMOLITION NOTES:

1. REMOVE EXISTING WET WELL TOP SLAB AND 1 FEET EXISTING WALL FROM BELOW OF THE TOP SLAB.
2. REMOVE EXISTING VALVE SUPPORT PAD AND THRUST BLOCKS.
3. REMOVE EXISTING COATING / LINER SYSTEM.

LEGEND:

TO BE DEMOLISHED

ARCADIS
Infrastructure · Water · Environment · Buildings
1330 Post Oak Blvd, Suite 2250
Houston, TX 77056
Tel: 713-953-4800
Fax: 713-977-4620
www.arcadis.com
Texas Registered Engineering Firm F-533

SURVEYED BY: AMANI ENGR.
FB NO. P-6335

STATE OF TEXAS
TANVIR HOSSAIN
121767
LICENSED
PROFESSIONAL ENGINEER

CITY OF HOUSTON

HOUSTON PUBLIC WORKS

LIFT STATION REHABILITATION & RECONSTRUCTION
CONSENT DECREE

ANNUNCIATION LIFT STATION WET WELL DEMOLITION SECTION

S-19

WBS NUMBER	FOR CITY OF HOUSTON USE ONLY
R-000267-0175-4	
DRAWING SCALE	
AS NOTED	
CITY OF HOUSTON PM	
NP NAWARAJ PANTA, P.E.	
SHEET NO. 167 OF 312	

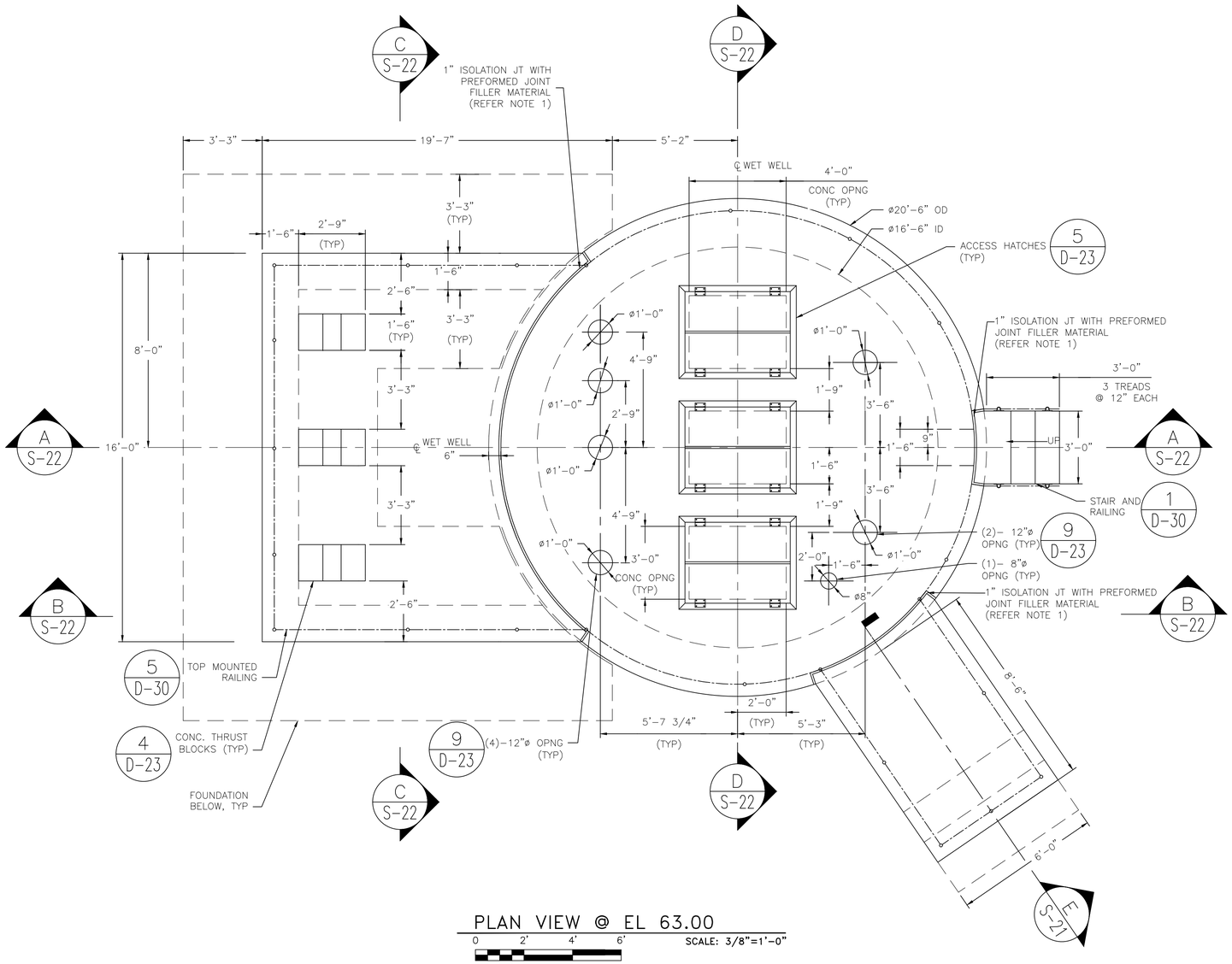

PLAN VIEW @ EL 63.00

0 2' 4' 6' SCALE: 3/8"=1'-0"

NO.	DATE	REVISION	APP.

NOTE:

1. FOR ISOLATION JT REFER TO SPECIFICATION SECTION 03151.

ARCADIS
Infrastructure · Water · Environment · Buildings
1330 Post Oak Blvd, Suite 2250
Houston, TX 77056
Tel: 713-953-4800
Fax: 713-977-4620
www.arcadis.com
Texas Registered Engineering Firm F-533

SURVEYED BY: AMANI ENGR.
FB NO. P-6335

STATE OF TEXAS
TANVIR HOSSAIN
121767
LICENSED PROFESSIONAL ENGINEER

CITY OF HOUSTON

HOUSTON PUBLIC WORKS

LIFT STATION REHABILITATION & RECONSTRUCTION CONSENT DECREE

ANNUNCIATION LIFT STATION WET WELL PLAN

S-20

WBS NUMBER	FOR CITY OF HOUSTON USE ONLY
R-000267-0175-4	
DRAWING SCALE	
AS NOTED	
CITY OF HOUSTON PM	
NP NAWARAJ PANTA, P.E.	
SHEET NO. 168 OF 312	

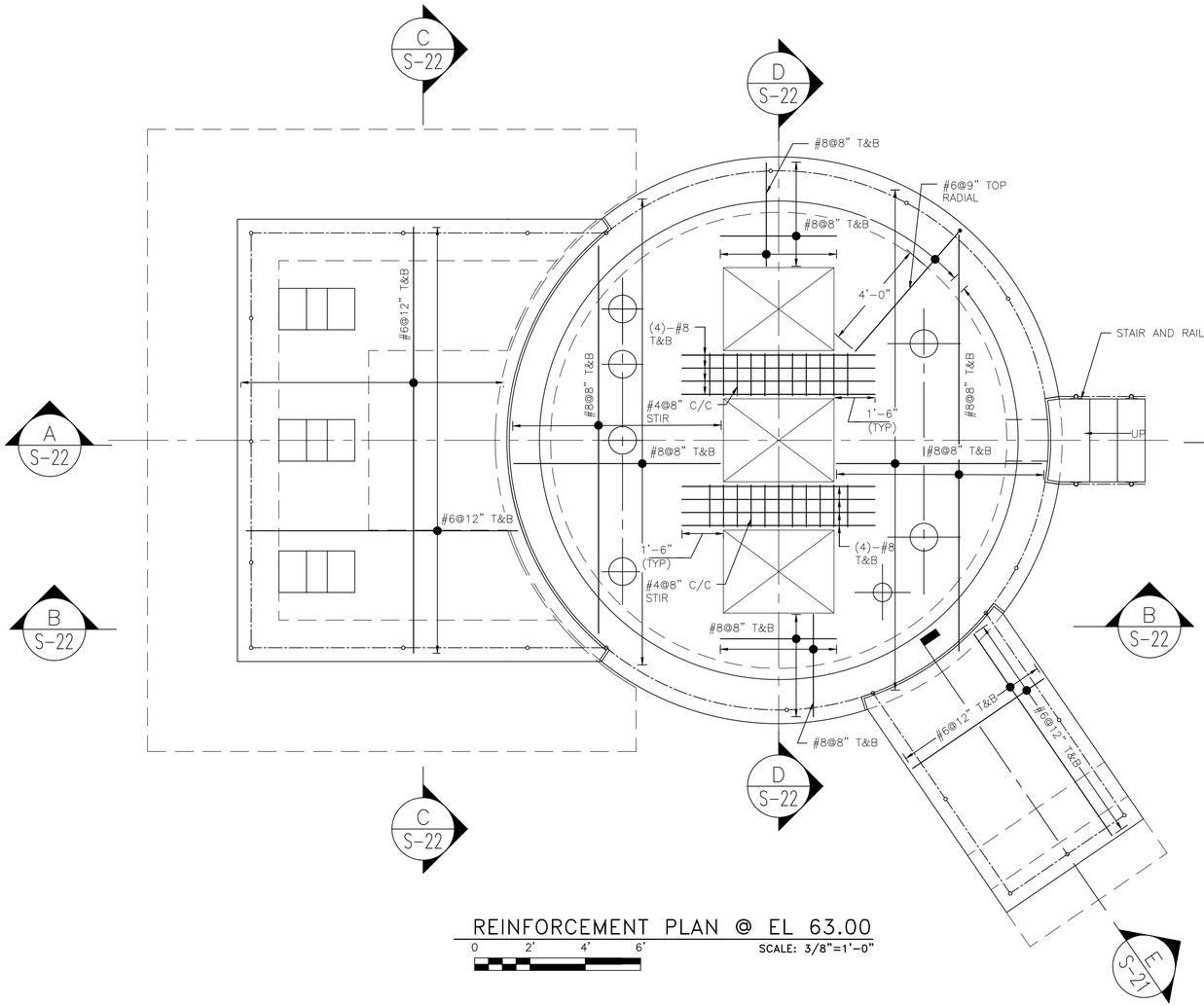

REINFORCEMENT PLAN @ EL 63.00

0 2' 4' 6' SCALE: 3/8"=1'-0"

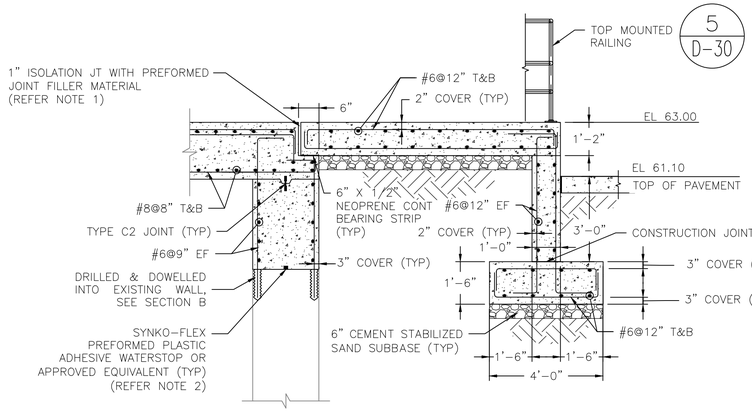

E SECTION

0 2' 4' 6' SCALE: 3/8"=1'-0"

NOTES:

1. FOR ISOLATION JT AND WATERSTOP REFER TO COH SPEC. 03151.

NO.	DATE	REVISION	APP.

ARCADIS
Infrastructure · Water · Environment · Buildings
1330 Post Oak Blvd, Suite 2250
Houston, TX 77056
Tel: 713-953-4800
Fax: 713-977-4620
www.arcadis.com
Texas Registered Engineering Firm F-533

SURVEYED BY: **AMANI ENGR.**
FB NO. P-6335

STATE OF TEXAS
TANVIR HOSSAIN
121767
LICENSED
PROFESSIONAL ENGINEER

CITY OF HOUSTON

HOUSTON PUBLIC WORKS

LIFT STATION REHABILITATION & RECONSTRUCTION
CONSENT DECREE

ANNUNCIATION LIFT STATION
WET WELL
REINFORCEMENT PLAN

S-21

WBS NUMBER	FOR CITY OF HOUSTON USE ONLY
R-000267-0175-4	
DRAWING SCALE	
AS NOTED	
CITY OF HOUSTON PM	
NP NAWARAJ PANTA, P.E.	
SHEET NO. 169 OF 312	

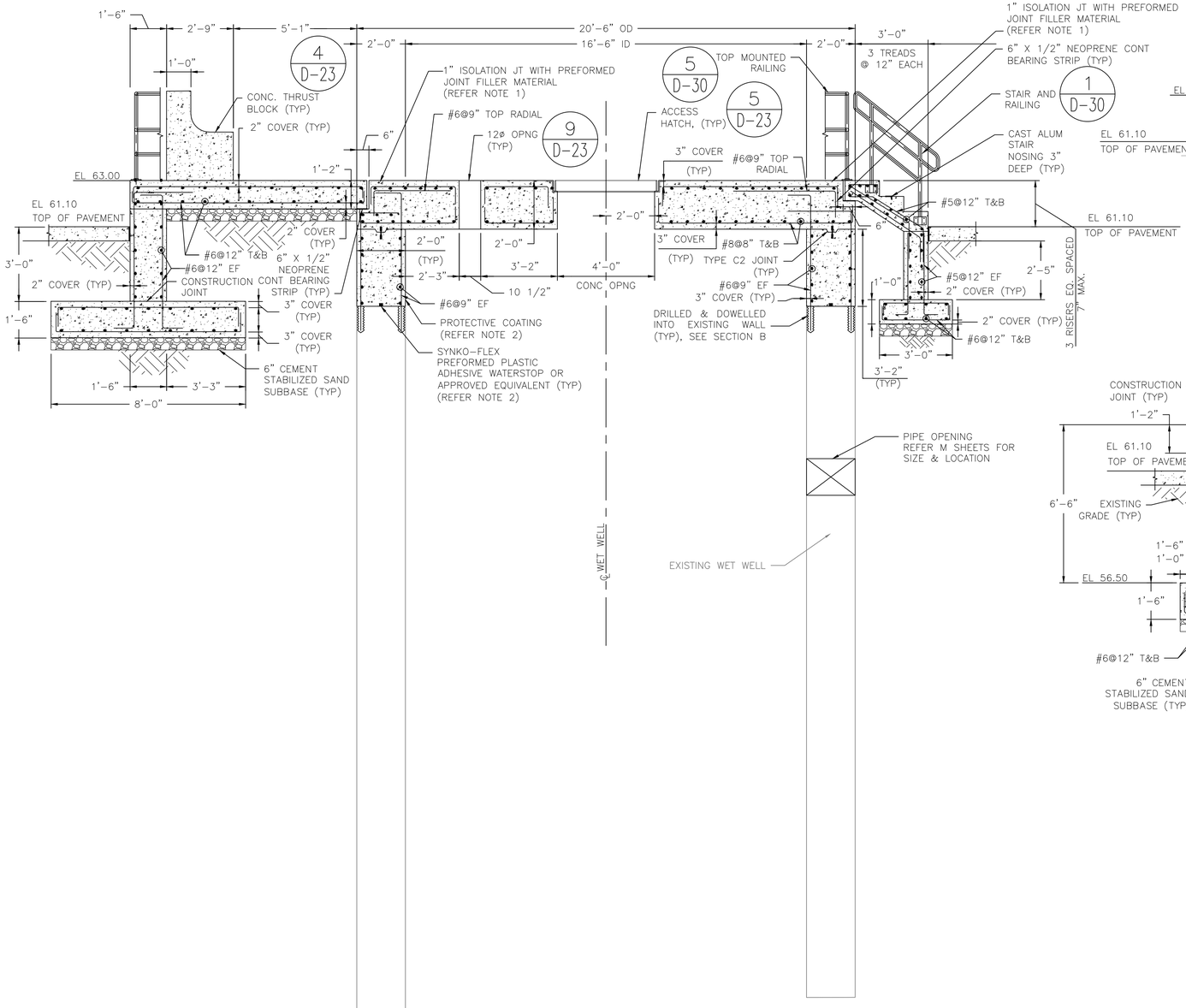

A SECTION

0 2' 4' 6'

SCALE: 3/8"=1'-0"

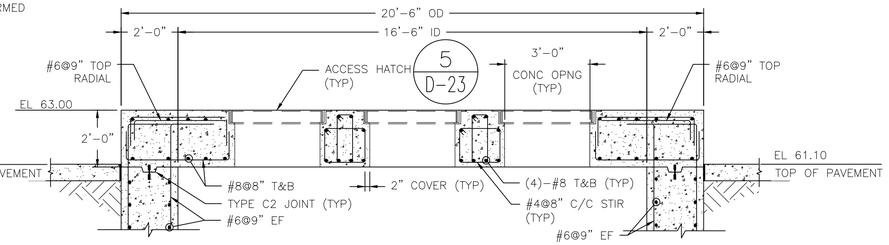

D SECTION

0 2' 4' 6'

SCALE: 3/8"=1'-0"

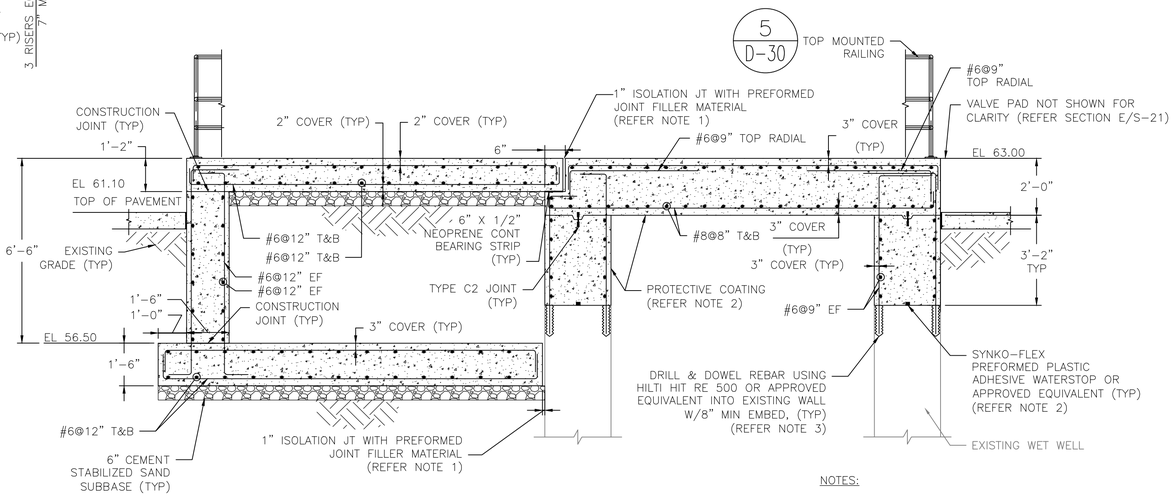

B SECTION

0 2' 4' 6'

SCALE: 3/8"=1'-0"

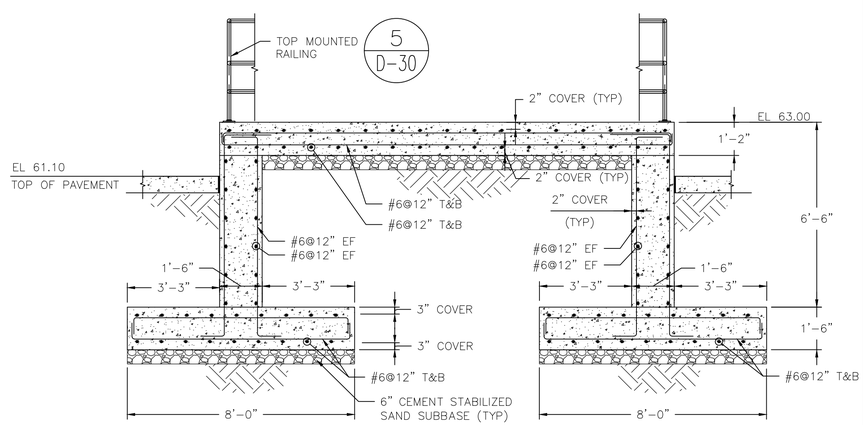

C SECTION

0 2' 4' 6'

SCALE: 3/8"=1'-0"

NOTES:

1. FOR ISOLATION JT AND WATERSTOP REFER TO COH SPEC. 03151.
2. PROVIDE PROTECTIVE COATING ON ALL INTERIOR CONCRETE SURFACE OF THE WET WELL. REFER TO COH PROTECTIVE COATINGS SPEC. 09901, SYSTEM 108.
3. PRIOR TO DRILLING, LOCATE EXISTING REINFORCING STEEL IN VICINITY OF PROPOSED HOLES USING NON-DESTRUCTIVE METHODS. IF REINFORCING CONFLICTS WITH PROPOSED HOLE LOCATION, OBTAIN ENGINEER'S APPROVAL OF ALTERNATE HOLE LOCATIONS TO AVOID DRILLING THROUGH OR DAMAGING EXISTING REINFORCING BARS.

NO.	DATE	REVISION	APP.

ARCADIS
Infrastructure · Water · Environment · Buildings
1330 Post Oak Blvd, Suite 2250
Houston, TX 77056
Tel: 713-953-4800
Fax: 713-977-4620
www.arcadis.com
Texas Registered Engineering Firm F-533

SURVEYED BY: AMANI ENGR.
FB NO. P-6335

STATE OF TEXAS
TANVIR HOSSAIN
121767
LICENSED PROFESSIONAL ENGINEER

CITY OF HOUSTON

HOUSTON PUBLIC WORKS

LIFT STATION REHABILITATION & RECONSTRUCTION CONSENT DECREE

ANNUNCIATION LIFT STATION WET WELL SECTION

S-22

WBS NUMBER	FOR CITY OF HOUSTON USE ONLY
R-000267-0175-4	
DRAWING SCALE	
AS NOTED	
CITY OF HOUSTON PM	
NP NAWARAJ PANTA, P.E.	
SHEET NO. 170 OF 312	

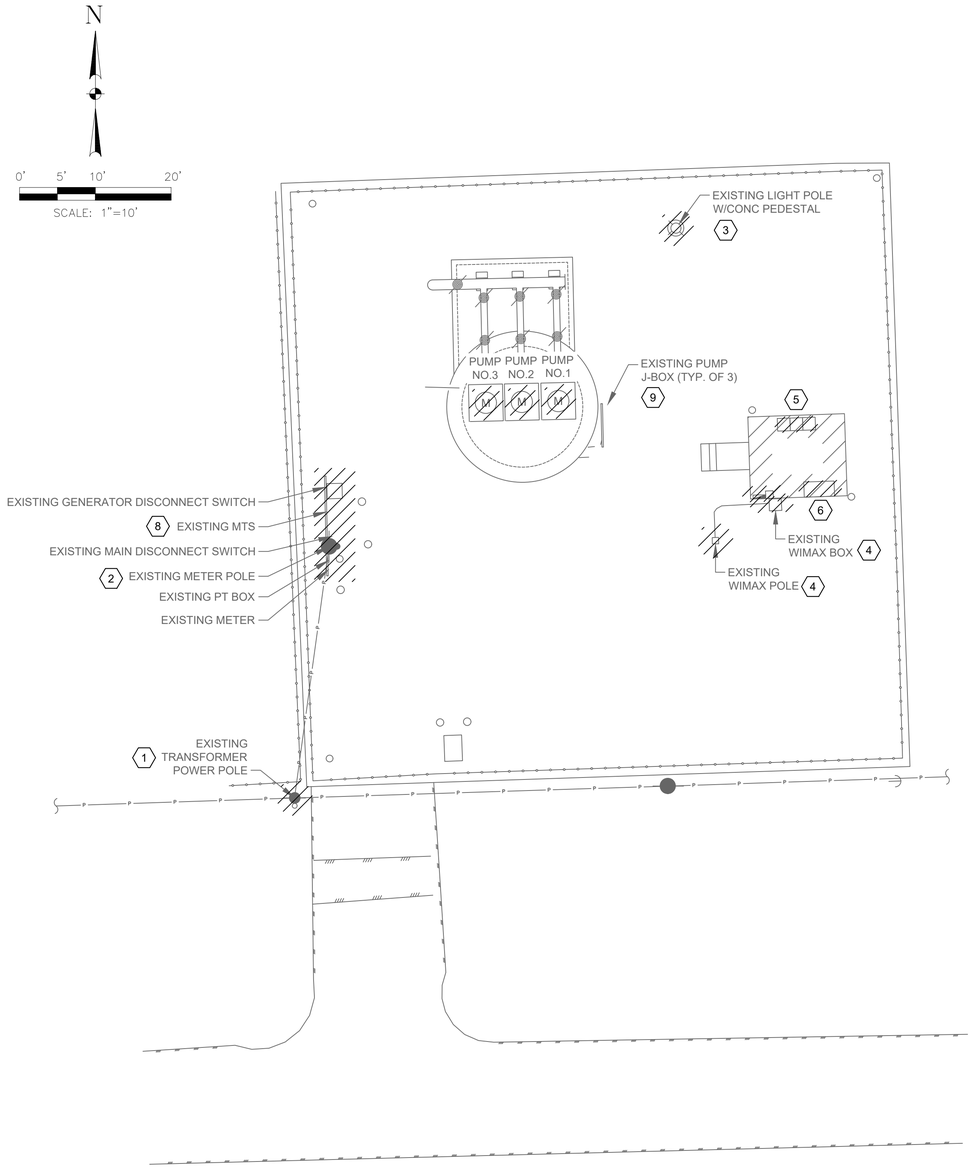

ANNUNCIATION ELECTRICAL DEMOLITION SITE

PLAN

1' = 10'-0"

EXISTING TRANSFOMRER POLE (TYPICAL OF 3)

PHOTOGRAPH A - 1

NTS

EXISTING METER POLE WITH WEATHERHEAD

PHOTOGRAPH B - 2

NTS

EXISTING LIGHT POLE

PHOTOGRAPH C - 3

NTS

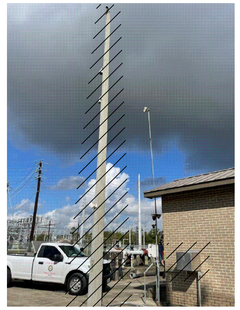

EXISTING WIMAX POLE

PHOTOGRAPH D - 4

NTS

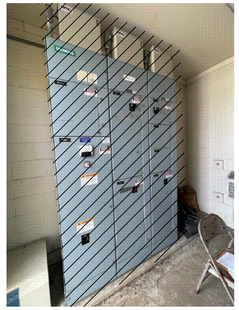

EXISTING MCC IN ELECTRICAL BUILDING

PHOTOGRAPH E - 5

NTS

EXISTING CONTROL PANEL IN ELECTRICAL BUILDING

PHOTOGRAPH F - 6

NTS

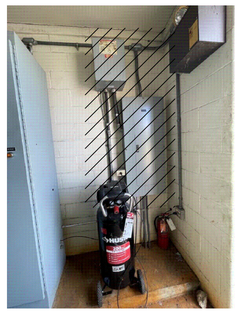

EXISTING LIGHTING PANEL & XFMR IN ELECTRICAL BUILDING

PHOTOGRAPH G - 7

NTS

EXISTING SERIVICE RACK

PHOTOGRAPH H - 8

NTS

EXISTING PUMP J-BOX (TYP. OF 3)

PHOTOGRAPH I - 9

NTS

LEGEND:

ITEMS TO BE DEMOLISHED.

NOTES BY SYMBOL "#":

1. EXISTING ELECTRICAL TRANSFORMERS ON POWER POLE TO BE DEMOLISHED AND REMOVED BY CENTERPOINT.
2. EXISTING ELECTRICAL SERVICE POLE TO BE DEMOLISHED AND REMOVED.
3. EXISTING SITE LIGHTING INCLUDING POLE FIXTURES, CONDUITS AND WIRES TO BE DEMOLISHED AND REMOVED
4. EXISTING WIMAX POLE FIXTURES, CONDUITS AND WIRES TO BE DEMOLISHED AND REMOVED.
5. EXISTING MCC, ASSOCIATED CONDUITS AND WIRES IN ELECTRICAL BUILDING TO BE DEMOLISHED AND REMOVED.
6. EXISTING CONTROL PANEL, ASSOCIATED CONDUITS AND WIRES IN ELECTRICAL BUILDING TO BE DEMOLISHED AND REMOVED.
7. EXISTING TRANSFORMER, LIGHTING PANEL, ASSOCIATED CONDUITS AND WIRES IN ELECTRICAL BUILDING TO BE DEMOLISHED AND REMOVED.
8. EXISTING ELECTRICAL SERVICE RACK, METER, PT BOX, MAIN DISCONNECT SWITCH, MTS AND GENERATOR DISCONNECT TO BE DEMOLISHED AND REMOVED.
9. EXISTING ELECTRICAL EQUIPMENT AND DEVICE(PUMP J-BOXES) IN LIFT STATION TO BE DEMOLISHED AND REMOVED.

NO.	DATE	REVISION	APP.

GAI
Gupta & Associates, Inc.
CONSULTING ENGINEERING
Registration No. F-2593
302 Dennis St.,
Houston, Texas 77006
Tel: 713-636-2936
Fax: 713-636-2967
email: hforouzan@gaiconsulting.com

ARCADIS
Infrastructure · Water · Environment · Buildings
1330 Post Oak Blvd, Suite 2250
Houston, TX 77056
Tel: 713-953-4800
Fax: 713-977-4620
www.arcadis.com
Texas Registered Engineering Firm F-533

SURVEYED BY: AMANI ENGR.

FB NO. P-6335

STATE OF TEXAS · H. A. FOROUZAN · 77748 · REGISTERED PROFESSIONAL ENGINEER

11/18/2025

CITY OF HOUSTON

HOUSTON PUBLIC WORKS

LIFT STATION REHABILITATION & RECONSTRUCTION CONSENT DECREE

ANNUNCIATION LIFT STATION ELECTRICAL DEMOLITION SITE PLAN

E-37

WBS NUMBER	FOR CITY OF HOUSTON USE ONLY
R-000267-0175-4	
DRAWING SCALE	
1" = 10'-0"	
CITY OF HOUSTON PM	
NP NAWARAJ PANTA, P.E.	
SHEET NO 171 OF 312	

FILE PATH: O:\H8103_Houston Lift Station Removal And Replacement (CMAR)\6 Drawings\Electrical\Working\Annunciation\Annunciation_E-01.dwg
PLOT STYLE: COH.ctb PLOTTED: 12/3/2025 11:03 AM

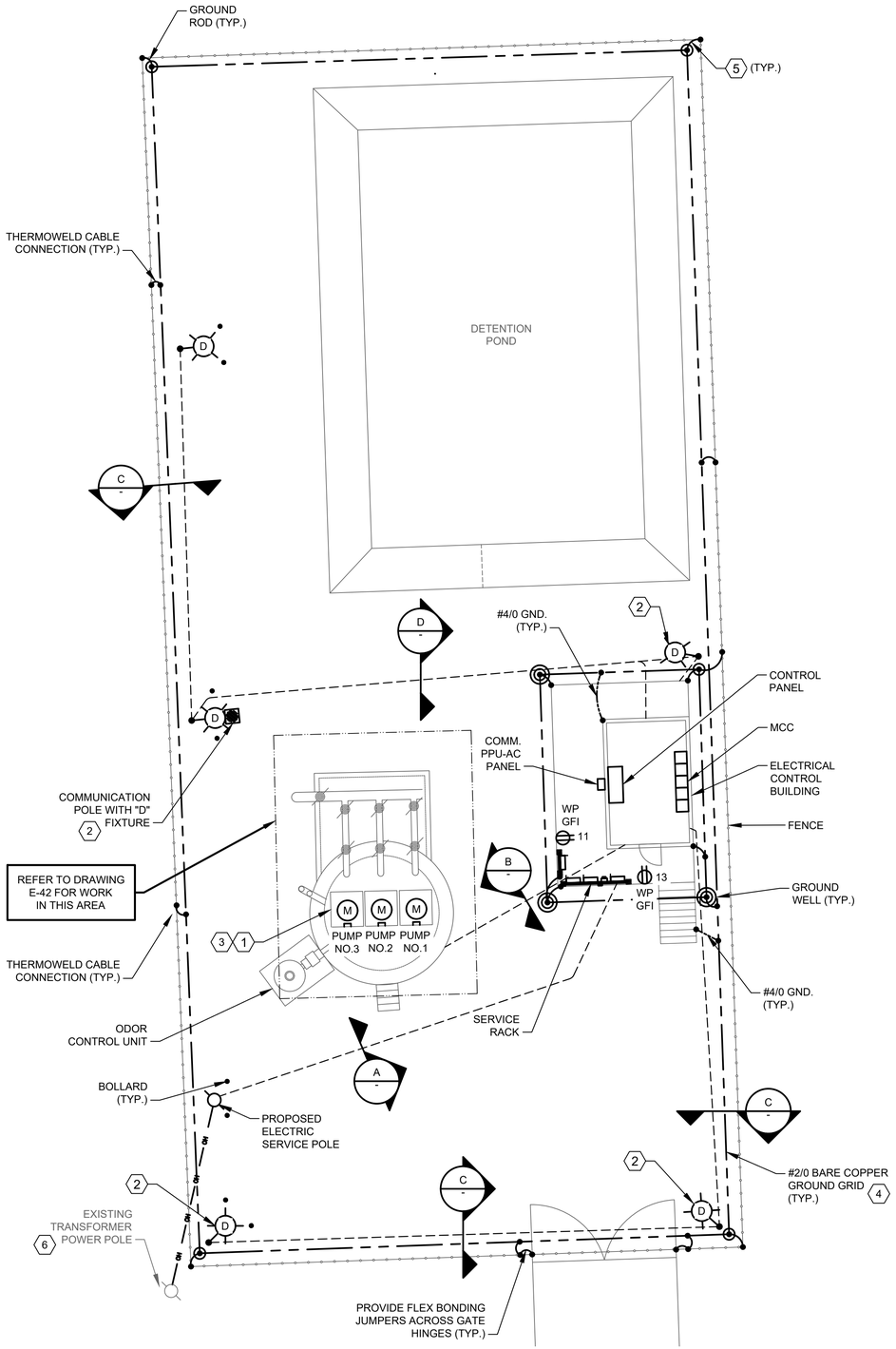

ANNUNCIATION LIFT STATION
ELECTRICAL PROPOSED SITE

PLAN

1"=10'-0"

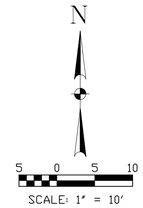

NOTES BY SYMBOL "⟨#⟩":

1. THE ELECTRICAL INSTALLATION IN THE WET WELL SHALL BE EXPLOSION PROOF, IN ACCORDANCE WITH THE NATIONAL ELECTRICAL CODE FOR CLASS I, DIVISION 1 LOCATIONS.
2. YARD LIGHT CONTROLLED BY LIGHTING SWITCH.
3. INSIDE WETWELL RATED NEMA CLASS 1, DIV. 1. OUSIDE ABOVE GROUND, AROUND WETWELL RATED CLASS 1, DIV. 2 ACCORDING TO NFPA 820.
4. GROUNDING LOOP SHALL BE BURIED 30" BELOW FINISHED GRADE.
5. #2/0 BARE COPPER GROUND TO BE BONDED TO FENCE POST.
6. EXISTING TRANSFORMER SHALL BE UPGRADED AS REQUIRED BY CPE.

NO.	DATE	REVISION	APP.

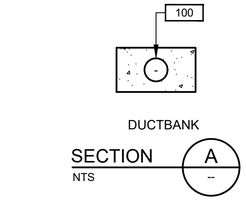

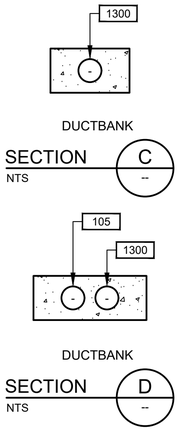

GAI
Gupta & Associates, Inc.
CONSULTING ENGINEERING
Registration No. F-2593
302 Dennis St.,
Houston, Texas 77006
Tel: 713-636-2936
Fax: 713-636-2987
email: hforouzan@gaiconsulting.com

ARCADIS
Infrastructure · Water · Environment · Buildings
1330 Post Oak Blvd, Suite 2250
Houston, TX 77056
Tel: 713-953-4800
Fax: 713-977-4620
www.arcadis.com
Texas Registered Engineering Firm F-533

SURVEYED BY: AMANI ENGR.
FB NO. P-6335

STATE OF TEXAS
H. A. FOROUZAN
77748
REGISTERED PROFESSIONAL ENGINEER
11/18/2025

CITY OF HOUSTON

HOUSTON PUBLIC WORKS

LIFT STATION REHABILITATION & RECONSTRUCTION CONSENT DECREE

ANNUNCIATION LIFT STATION ELECTRICAL PROPOSED SITE PLAN

E-38

WBS NUMBER	FOR CITY OF HOUSTON USE ONLY
R-000267-0175-4	
DRAWING SCALE	
1" = 1'-0"	
CITY OF HOUSTON PM	
NP NAWARAJ PANTA, P.E.	
SHEET NO 172 OF 312	

FILE PATH: O:\H8103_Houston Lift Station Removal And Replacement (CMAR)\6 Drawings\Electrical\Working\Annunciation\Annunciation_E-02.dwg
PLOT STYLE: GAI.ctb PLOTTED: 12/3/2025 11:03 AM

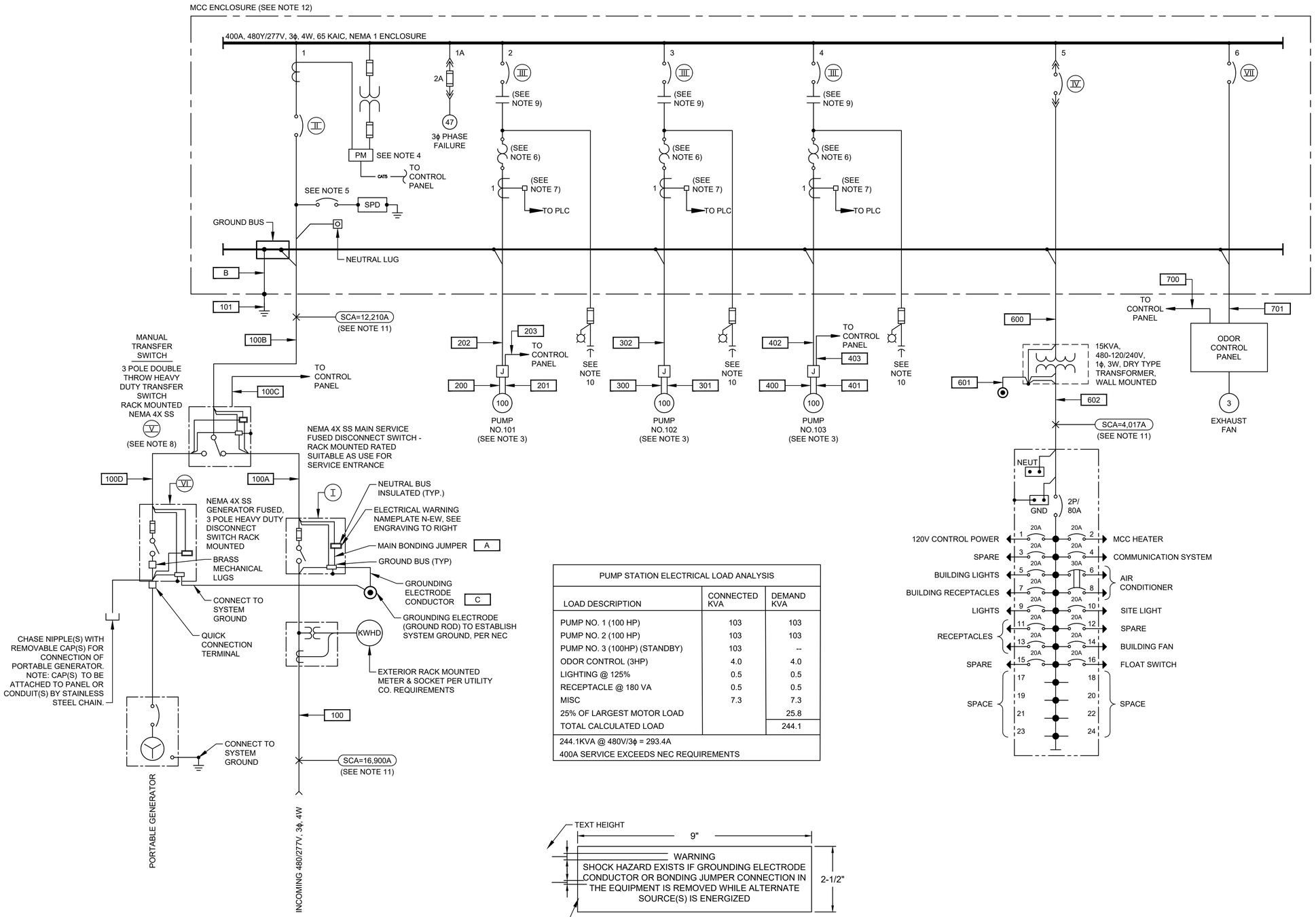

PUMP STATION ELECTRICAL LOAD ANALYSIS		
LOAD DESCRIPTION	CONNECTED KVA	DEMAND KVA
PUMP NO. 1 (100 HP)	103	103
PUMP NO. 2 (100 HP)	103	103
PUMP NO. 3 (100HP) (STANDBY)	103	--
ODOR CONTROL (3HP)	4.0	4.0
LIGHTING @ 125%	0.5	0.5
RECEPTACLE @ 180 VA	0.5	0.5
MISC	7.3	7.3
25% OF LARGEST MOTOR LOAD		25.8
TOTAL CALCULATED LOAD		244.1
244.1KVA @ 480V/3ϕ = 293.4A		
400A SERVICE EXCEEDS NEC REQUIREMENTS		

1/16" THICK PHENOLIC NAMEPLATE-RED WITH WHITE LETTERS. CENTER ENGRAVING AND ANCHOR TO ENCLOSURE WITH 316 SS SELF TAPPING SCREWS. APPLY SILICON SEALER INSIDE DOOR AT SCREW PENETRATION TO SEAL SCREWS.

ELECTRICAL WARNING NAMEPLATE N-EW ENGRAVING

NOTES:

1. FOR DESCRIPTION AND RATINGS OF ITEMS INDICATED WITH ROMAN NUMERAL FLAGS, SEE DEVICE RATINGS SCHEDULE.
2. CONTRACTOR SHALL VERIFY ACTUAL AMPERAGES OF MOTORS AND SIZE STARTERS, MOTOR CIRCUIT PROTECTORS, ETC. ACCORDINGLY.
3. REFER TO INSTRUMENTATION DRAWINGS I-46, I-47, I-48, FOR PUMP CONTROL SCHEMATIC.
4. POWER MONITOR.
5. PROVIDE BREAKER ACCORDING TO MANUFACTURER'S REQUIREMENTS.
6. COMBINATION OF CT AND OVERLOAD RELAY AS REQUIRED. WHERE APPLICABLE.
7. PROVIDE 5A PRIMARY TO 4-20mA CURRENT TRANSDUCER.
8. PROVIDE A NORMALLY OPEN (NO) AUXILIARY CONTACT FOR BOTH ON POSITIONS.
9. STARTER NEMA SIZE 2 IS MINIMUM AND NEMA SIZE 3 OR GREATER SHALL BE VACUUM TYPE.
10. CONTRACTOR TO COORDINATE POWER FACTOR CORRECTION CAPACITOR SIZE WITH PUMP MANUFACTURER. MINIMUM 95% POWER FACTOR CORRECTION AT FULL LOAD. MOUNT CAPACITORS EXTERNAL ABOVE MCC ON THE APPROPRIATE SECTION.
11. POINT TO POINT METHOD IS USED FOR SHORT CIRCUIT CURRENT CALCULATION.
12. CONTRACTOR SHALL PROVIDE A PERMANENTLY AFFIXED LABEL (2" X 3") SHOWING THE AVAILABLE FAULT CURRENT AND CALCULATION DATE. THE LABEL SHALL BE BLUE LETTERING ON A CONTRASTING BACKGROUND.
13. THE INSULATION TYPES OF ALL ELECTRICAL CONDUCTORS USED IN THE PROJECT HAVE BEEN SPECIFIED IN ELECTRICAL SPECIFICATIONS (16120, 16121, AND 16122). THE TYPES OF CONDUITS USED IN THE PROJECT HAS BEEN SPECIFIED IN ELECTRICAL SPECIFICATIONS 16111.

NO.	DATE	REVISION	APP.
1	02/27/2026	100% SUBMITTAL	HF

GAI
Gupta & Associates, Inc.
CONSULTING ENGINEERING
Registration No. F-2593
302 Dennis St.,
Houston, Texas 77006
Tel: 713-636-2936
Fax: 713-636-2987
email: hforouzan@gaiconsulting.com

ARCADIS
Infrastructure · Water · Environment · Buildings
1330 Post Oak Blvd, Suite 2250
Houston, TX 77056
Tel: 713-953-4800
Fax: 713-977-4620
www.arcadis.com
Texas Registered Engineering Firm F-533

SURVEYED BY: AMANI ENGR.
FB NO. P-6335

STATE OF TEXAS
H. A. FOROUZAN
77748
REGISTERED
PROFESSIONAL ENGINEER
02/27/2026

CITY OF HOUSTON
HOUSTON PUBLIC WORKS

LIFT STATION REHABILITATION & RECONSTRUCTION CONSENT DECREE

ANNUNCIATION LIFT STATION ELECTRICAL SINGLE LINE DIAGRAM

E-39

WBS NUMBER	FOR CITY OF HOUSTON USE ONLY
R-000267-0175-3	
DRAWING SCALE	
NONE	
CITY OF HOUSTON PM	
NP NAWARAJ PANTA, P.E.	
SHEET NO. 173 OF 312	

FILE PATH: O:\H8103_Houston Lift Station Removal And Replacement (CMAR)\6 Drawings\Electrical\Working\Annunciation\Permitting\Annunciation_E-03.dwg
PLOT STYLE: COH.ctb PLOTTED: 2/27/2026 8:49 AM

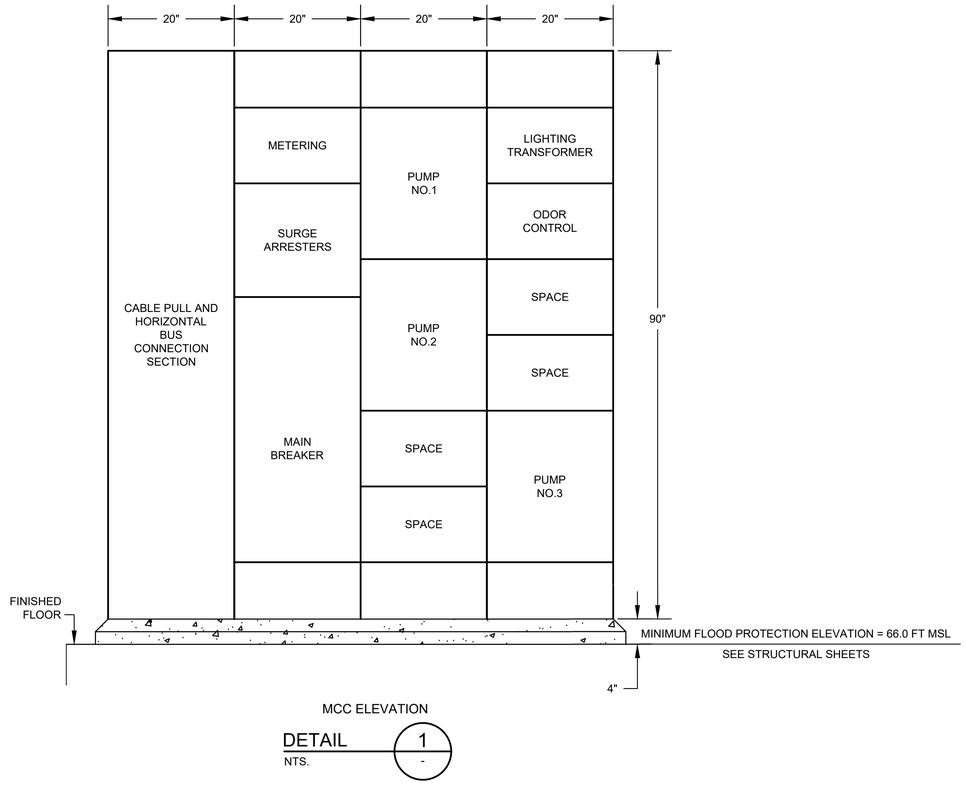

MCC ELEVATION

DETAIL 1 / NTS. -

ITEM	CIRCUIT	DESCRIPTION	RATINGS FOR PUMP SIZES INDICATED
I	--	MAIN DISCONNECT SWITCH	
		OPERATING VOLTAGE	480V
		CURRENT RATING	400A
		CURRENT LIMITING	CLASS J
		FUSES TYPE & SIZE	400A
II	1	MAIN BREAKER	
		3 POLE - TYPE	MOLDED CASE
		MOUNTING	FIXED
		OPERATING VOLTAGE	480V
		FRAME SIZE	400A
		TRIP SETTING	400A
		INTERRUPT CAPACITY	65KA SYM
		OPTIONS	NONE
III	2 3 4	PUMP MOTOR STARTERS	
		QUANTITY	3
		MOUNTING	FIXED
		SHORT CIRCUIT PROTECTION	
		3 POLE - TYPE	MCP
		OPERATING VOLTAGE	480V
		FRAME SIZE	200A
		TRIP SETTING	FIELD ADJ
		INTERRUPT CAPACITY	65KA SYM
		MOTOR STARTING CONTACTOR	
		3 POLE - TYPE	VACUUM
		OPERATING VOLTAGE	480V
		SIZE	NEMA 4
		OVERLOAD PROTECTION TYPE	SOLID STATE MOR
		CT RATIO	150:5
IV	5	LIGHTING TRANSFORMER FEEDER BREAKER	
		NO. OF POLES	2
		TYPE	MOLDED CASE
		OPERATING VOLTAGE	480V
		FRAME SIZE	100A
		TRIP SETTING	40A
		INTERRUPT CAPACITY	65KA SYM
V	--	MANUAL TRANSFER SWITCH	3P, 4W SN
		OPERATING VOLTAGE	480V
		CURRENT RATING	400A
VI	--	GENERATOR FUSED DISCONNECT SWITCH	3P, 4W SN
		OPERATING VOLTAGE	480V
		CURRENT RATING	400A
		CURRENT LIMITING	CLASS J
		FUSES TYPE & SIZE	400A
VII	6	ODOR CONTROL FEEDER BREAKER	
		NO. OF POLES	3
		TYPE	MOLDED CASE
		OPERATING VOLTAGE	480V
		FRAME SIZE	100A
		TRIP SETTING	20A
		INTERRUPT CAPACITY	65KA SYM

NO.	DATE	REVISION	APP.

GAI
Gupta & Associates, Inc.
CONSULTING ENGINEERING
Registration No. F-2593
302 Dennis St.,
Houston, Texas 77006
Tel: 713-636-2936
Fax: 713-636-2987
email: hforouzan@gaiconsulting.com

ARCADIS
Infrastructure · Water · Environment · Buildings
1330 Post Oak Blvd, Suite 2250
Houston, TX 77056
Tel: 713-953-4800
Fax: 713-977-4620
www.arcadis.com
Texas Registered Engineering Firm F-533

SURVEYED BY: AMANI ENGR.
FB NO. P-6335

STATE OF TEXAS
H. A. FOROUZAN
77748
REGISTERED PROFESSIONAL ENGINEER
02/27/2026

CITY OF HOUSTON

HOUSTON PUBLIC WORKS

LIFT STATION REHABILITATION & RECONSTRUCTION CONSENT DECREE

ANNUNCIATION LIFT STATION MCC ELEVATION & DEVICE RATING SCHEDULE

E-40

WBS NUMBER	FOR CITY OF HOUSTON USE ONLY
R-000267-0175-4	
DRAWING SCALE	
AS SHOWN	
CITY OF HOUSTON PM	
NP NAWARAJ PANTA, P.E.	
SHEET NO. 174 OF 312	

FILE PATH: O:\H8103_Houston Lift Station Removal And Replacement (CMAR)\5 Construction Phase\Addenda\Addendum No.1\Annunciation\Annunciation_E-04.dwg
PLOT STYLE: COH.ctb PLOTTED: 2/27/2026 11:31 AM

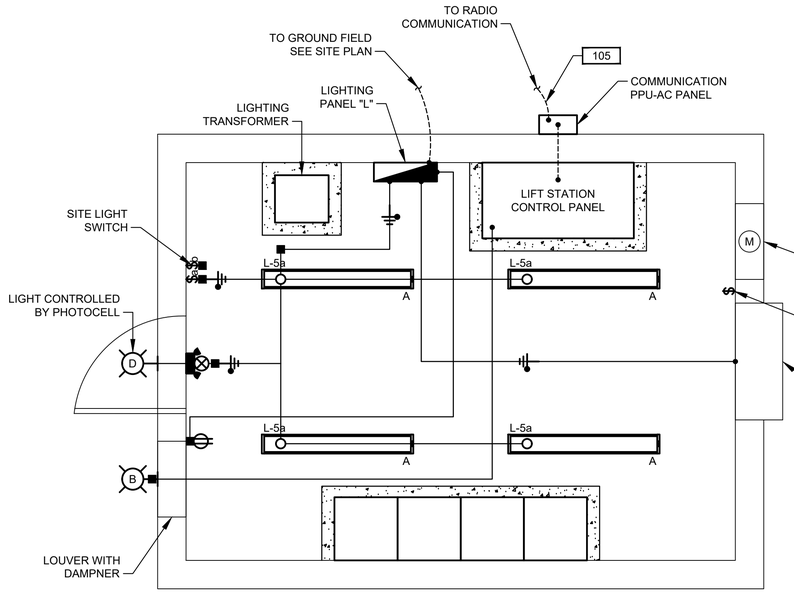

LIGHTING & COMMUNICATION SYSTEM PLAN

1/2"=1'-0"

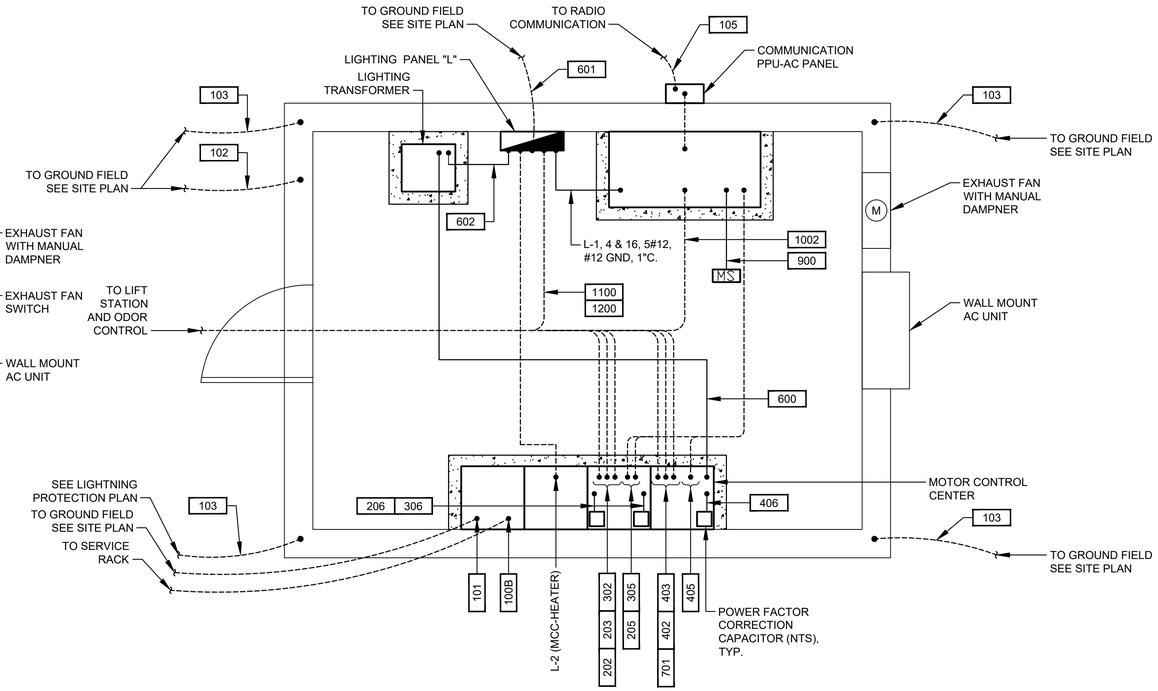

POWER PLAN

1/2"=1'-0"

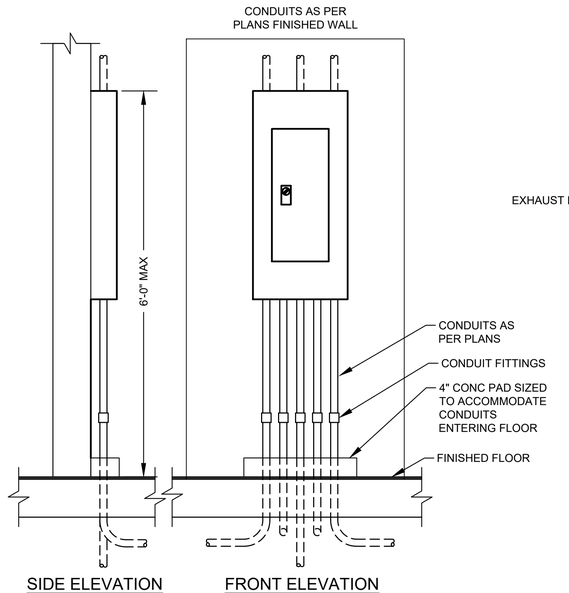

SIDE ELEVATION FRONT ELEVATION

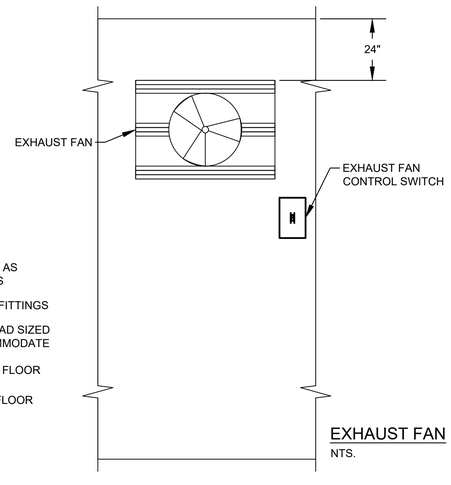

EXHAUST FAN

NTS.

TYPICAL PANEL INSTALLATION

DETAIL 1 / - NTS.

NO.	DATE	REVISION	APP.

GAI
Gupta & Associates, Inc.
CONSULTING ENGINEERING
Registration No. F-2593
302 Dennis St.,
Houston, Texas 77006
Tel: 713-636-2936
Fax: 713-636-2987
email: hforouzan@gaiconsulting.com

ARCADIS
Infrastructure · Water · Environment · Buildings
1330 Post Oak Blvd, Suite 2250
Houston, TX 77056
Tel: 713-953-4800
Fax: 713-977-4620
www.arcadis.com
Texas Registered Engineering Firm F-533

SURVEYED BY: AMANI ENGR.
FB NO. P-6335

STATE OF TEXAS · H. A. FOROUZAN · 77748 · REGISTERED PROFESSIONAL ENGINEER
11/18/2025

CITY OF HOUSTON

HOUSTON PUBLIC WORKS

LIFT STATION REHABILITATION & RECONSTRUCTION CONSENT DECREE

ANNUNCIATION LIFT STATION ELECTRICAL BUILDING PLAN

E-41

WBS NUMBER	FOR CITY OF HOUSTON USE ONLY
R-000267-0175-4	
DRAWING SCALE	
AS SHOWN	
CITY OF HOUSTON PM	
NP NAWARAJ PANTA, P.E.	
SHEET NO 175 OF 312	

FILE PATH: O:\H8103_Houston Lift Station Removal And Replacement (CMAR)\6 Drawings\Electrical\Working\Annunciation\Annunciation_E-05.dwg
PLOT STYLE: GAI.ctb PLOTTED: 12/3/2025 11:04 AM

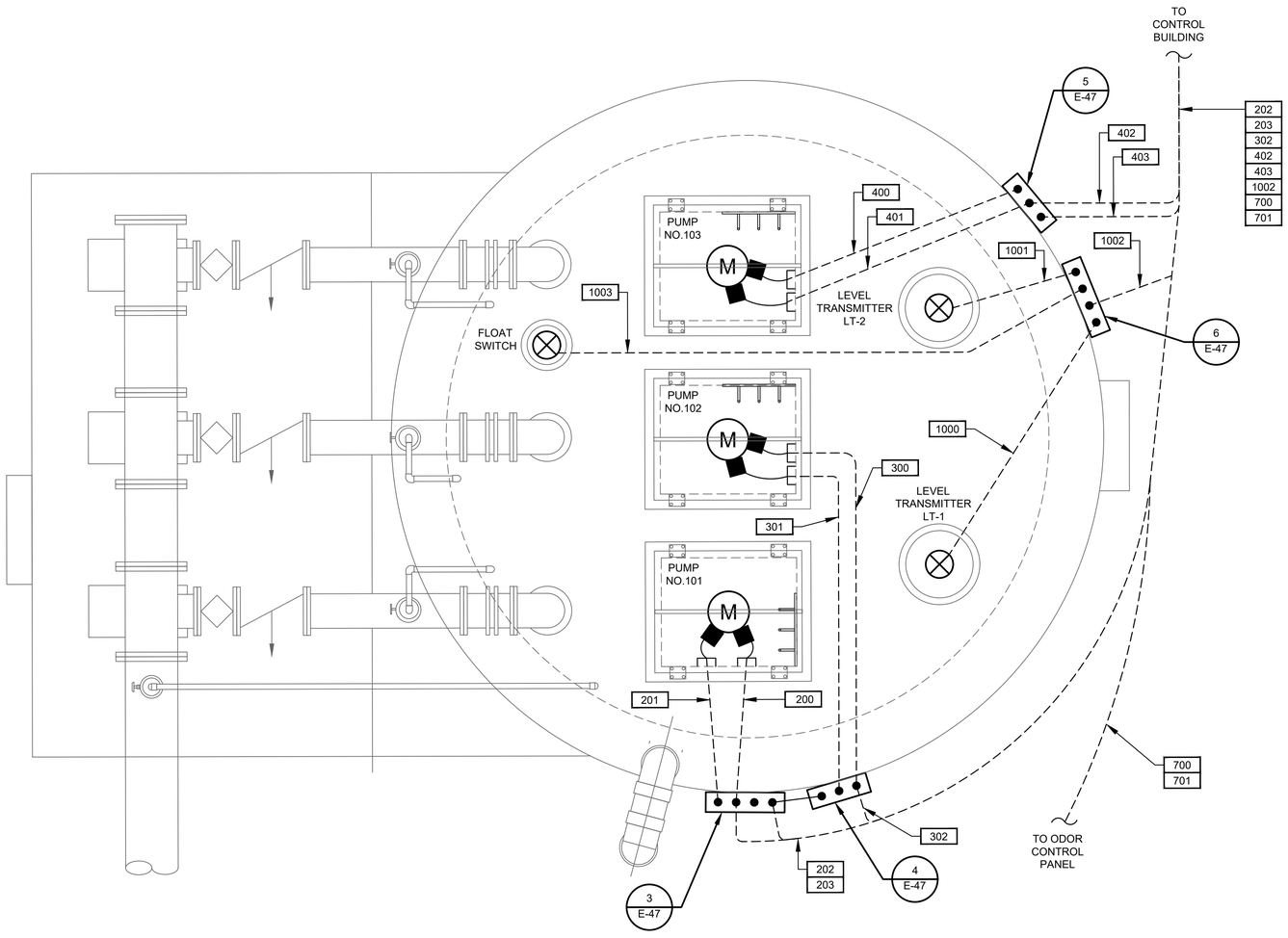

ANNUNCIATION LIFT STATION
ENLARGED PLAN

PLAN

1/2"=1'-0"

N

1 0 1 2 3

SCALE: 1/2" = 1'-0"

NO.	DATE	REVISION	APP.

GAI
Gupta & Associates, Inc.
CONSULTING ENGINEERING
Registration No. F-2593

302 Dennis St.,
Houston, Texas 77006
Tel: 713-636-2936
Fax: 713-636-2987
email: hforouzan@gaiconsulting.com

ARCADIS
Infrastructure · Water · Environment · Buildings
1330 Post Oak Blvd, Suite 2250
Houston, TX 77056
Tel: 713-953-4800
Fax: 713-977-4620
www.arcadis.com
Texas Registered Engineering Firm F-533

SURVEYED BY: AMANI ENGR.

FB NO. P-6335

STATE OF TEXAS
H. A. FOROUZAN
77748
REGISTERED
PROFESSIONAL ENGINEER

11/18/2025

CITY OF HOUSTON

HOUSTON PUBLIC WORKS

LIFT STATION REHABILITATION & RECONSTRUCTION
CONSENT DECREE

ANNUNCIATION LIFT STATION
ELECTRICAL ENLARGED PLAN

E-42

WBS NUMBER	FOR CITY OF HOUSTON USE ONLY
R-000267-0175-4	
DRAWING SCALE	
1/2" = 1'-0"	
CITY OF HOUSTON PM	
NP NAWARAJ PANTA, P.E.	
SHEET NO 176 OF 312	

FILE PATH: O:\H8103_Houston Lift Station Removal And Replacement (CMAR)\6 Drawings\Electrical\Working\Annunciation\Annunciation_E-06.dwg
PLOT STYLE: GAI.ctb PLOTTED: 12/3/2025 11:04 AM

	DESCRIPTION	SERVICE		ROUTING			CONDUIT & WIRE SIZE
		VOLTAGE	AMPS OR HP	FROM	TO	VIA	
A	MAIN BONDING JUMPER	--	--	MAIN FUSED DISCONNECT NEUTRAL	MAIN FUSED DISCONNECT GROUND	--	#1/0 CU GND.
B	EQUIPMENT BONDING JUMPER	--	--	MCC/POWER PANEL ENCLOSURE	POWER/CONTROL PANEL & EQUIPMENT	--	#1/0 CU GND.
C	GROUNDED ELECTRODE CONDUCTOR	--	--	GROUNDING ELECTRODE	MAIN SERVICE FUSED DISCONNECT GROUNDING	--	#1/0 CU GND.
100	SERVICE ENTRANCE	480V	400A	UTILITY POWER SERVICE	METER DISCONNECT		3#500 MCM., #1/0 NEUT. #1/0 GND., 4" C.
100A	SERVICE POWER	480V	400A	SERVICE DISCONNECT	MANUAL TRANSFER SWTICH	--	3#500 MCM., #1/0 NEUT. #1/0 GND., 4" C.
100B	MCC SERVICE POWER	480V	400A	MANUAL TRANSFER SWITCH	MAIN BREAKER IN MCC	--	3#500 MCM., #1/0 NEUT. #1/0 GND., 4" C.
100C	NORMAL/EMERGENCY POWER STATUS	24VDC	--	MANUAL TRANSFER SWITCH	CONTROL PANEL	--	4 #14 AWG., 1"C.
100D	EMERGENCY POWER	480V	400A	GENERATOR DISCONNECT	MANUAL TRANSFER SWITCH	--	3#500 MCM., #1/0 NEUT. #1/0 GND., 4" C.
101	GROUND ELECTRODE CONDUCTOR	--	--	MCC ENCLOSURE	GROUND FIELD	--	#4/0 GND.
102	GROUND ELECTRODE CONDUCTOR	--	--	BUILDING STEEL	GROUND FIELD	--	#4/0 GND.
103	BUILDING GROUNDING	--	--	BUILDING REBAR	LIGHTNING GROUND ROD	--	#4/0 GND.
104	GROUND ELECTRODE CONDUCTOR	--	--	CONTROL PANEL	GROUND FIELD	--	#2/0 GND.
105	COMMUNICATION	--	--	COMMUNICATION POLE	CONTROL PANEL	--	1-1/2"C. CAT 5E
200	PUMP NO. 1 POWER	480V	100 HP	PUMP NO. 1	PUMP NO. 1 JUNCTION BOX	--	MANUFACTURER CABLE IN 3-1/2"C.
201	PUMP NO. 1 CONTROLS	120V	--	PUMP NO. 1	PUMP NO. 1 JUNCTION BOX	--	MANUFACTURER CABLE IN 3-1/2"C.
202	PUMP NO. 1 POWER	480V	100 HP	PUMP NO. 1 JUNCTION BOX	PUMP STARTER	--	3#1 AWG., #6 GND., 2"C.
203	COMBINED PUMP CONTROLS	120V	--	PUMP NO. 1 JUNCTION BOX	PUMP STARTER	COMBINE PUMP 1 & 2 CONTROLS	COMBINE 200 & 300 TAG WIRING, 8#14, 1"C.
205	PUMP NO. 1 CONTROLS	120V	--	STARTER IN MOTOR CONTROL CENTER	CONTROL PANEL	--	12#14 AWG., 3/4"C.
206	PUMP NO. 1 CAPACITOR	480V	TBD	PUMP NO. 1 MOTOR STARTER	POWER FACTOR CORRECTION CAPACITOR	--	3 #10 AWG., #10 GND., 3/4"C.
300	PUMP NO. 2 POWER	480V	100 HP	PUMP NO. 2	PUMP NO. 2 JUNCTION BOX	--	MANUFACTURER CABLE IN 3-1/2"C.
301	PUMP NO. 2 CONTROLS	120V	--	PUMP NO. 2	PUMP NO. 2 JUNCTION BOX	--	MANUFACTURER CABLE IN 3-1/2"C.
302	PUMP NO. 2 POWER	480V	100 HP	PUMP NO. 2 JUNCTION BOX	PUMP STARTER	--	3#1 AWG., #6 GND., 2"C.
305	PUMP NO. 2 CONTROLS	120V	--	STARTER IN MOTOR CONTROL CENTER	CONTROL PANEL	--	12#14 AWG., 3/4"C.
306	PUMP NO. 2 CAPACITOR	480V	TBD	PUMP NO. 2 MOTOR STARTER	POWER FACTOR CORRECTION CAPACITOR	--	3 #10 AWG., #10 GND., 3/4"C.
400	PUMP NO. 3 POWER	480V	100 HP	PUMP NO. 3	PUMP NO. 3 JUNCTION BOX	--	MANUFACTURER CABLE IN 3-1/2"C.
401	PUMP NO. 3 CONTROLS	120V	--	PUMP NO. 3	PUMP NO. 3 JUNCTION BOX	--	MANUFACTURER CABLE IN 3-1/2"C.
402	PUMP NO. 3 POWER	480V	100 HP	PUMP NO. 3 JUNCTION BOX	PUMP STARTER	--	3#1 AWG., #6 GND., 2"C.
403	COMBINED PUMP CONTROLS	120V	-	PUMP NO. 3 JUNCTION BOX	CONTROL PANEL	--	4#14 AWG., 1"C.
405	PUMP NO. 3 CONTROLS	120V	--	STARTER IN MOTOR CONTROL CENTER	CONTROL PANEL	--	12#14 AWG., 1"C.
406	PUMP NO. 3 CAPACITOR	480V	TBD	PUMP NO. 3 MOTOR STARTER	POWER FACTOR CORRECTION CAPACITOR	--	3 #10 AWG., #10 GND., 3/4"C.
600	LIGHTING PANEL FEEDER	480V	40A	MOTOR CONTROL CENTER	LIGHTING TRANSFORMER	--	2#6 AWG., #6 GND., 1"C.
601	LIGHTING PANEL GROUND	--	--	LIGHTING PANEL	GROUND FIELD	--	#8 GND., 1"C.
602	LIGHTING PANEL FEEDER	120/240V	80A	LIGHTING TRANSFORMER	LIGHTING PANEL	--	3#4 AWG., #6 GND., 1-1/4" C.
700	ODOR CONTROL	120V	--	CONTROL PANEL	ODOR CONTROL PANEL	--	5#14 AWG., #14 GND., 1" C.
701	ODOR CONTROL FEEDER	--	--	ODOR CONTROL FEEDER BREAKER IN MCC	ODOR CONTROL PANEL	--	3#12 AWG., #12 GND., 1" C.
900	INTRUSION ALARM	24VDC	--	MOTION SWITCH	CONTROL PANEL	--	2#14 AWG., 3/4" C.
1000	LEVEL TRANSMITTER	24VDC	--	TRANSMITTER JUNCTION BOX	TRANSMITTER JUNCTION BOX	--	MANUFACTURER'S CABLE IN 2-1/2"C
1001	LEVEL TRANSMITTER	24VDC	--	TRANSMITTER JUNCTION BOX	TRANSMITTER JUNCTION BOX	--	MANUFACTURER'S CABLE IN 2-1/2"C
1002	COMBINED LEVEL TRANSMITTERS & FLOAT SWITCH	24VDC	--	CONTROL PANEL	TRANSMITTER JUNCTION BOX	--	2-TRI, 4#14, 2" C.
1003	WELL FLOAT SWITCHES	24VDC	--	TRANSMITTER JUNCTION BOX	FLOAT SWITCH NO.1 & NO.2	--	MANUFACTURER'S CABLE IN 2-1/2"C
1100	120VAC FOR RECEPTACLE	-	--	LIGHTING PANEL	RECEPTACLE NEXT TO TRANSMITTER J-BOX	--	2#12 AWG., #12 GND., 1" C.
1200	120VAC FOR RECEPTACLE	-	--	LIGHTING PANEL	RECEPTACLE NEXT TO PUMP NO.2 J-BOX	--	2#12 AWG., #12 GND., 1" C.
1300	SITE LIGHTING	120VAC	--	LIGHTING PANEL	SITE LIGHTS	--	2#12 AWG., #12 GND., 1" C.

NO.	DATE	REVISION	APP.

NOTES:

1. CONDUITS LABELED "FUTURE SPACE" ARE TO BE INSTALLED AND CAPPED IN FIELD.
2. ANY CONDUIT REQUIRING A CSBE SEAL, SHALL BE A MINIMUM SIZE OF 2 1/2".
3. ALL UNDERGROUND CONDUITS (SINGLE AND MULTI-RUN) TO BE ENCASED IN REINFORCED CONCRETE DUCTBANK.

GAI
Gupta & Associates, Inc.
CONSULTING ENGINEERING
Registration No. F-2593
302 Dennis St.,
Houston, Texas 77006
Tel: 713-636-2936
Fax: 713-636-2987
email: hforouzan@gaiconsulting.com

ARCADIS
Infrastructure · Water · Environment · Buildings
1330 Post Oak Blvd, Suite 2250
Houston, TX 77056
Tel: 713-953-4800
Fax: 713-977-4620
www.arcadis.com
Texas Registered Engineering Firm F-533

SURVEYED BY: AMANI ENGR.
FB NO. P-6335

STATE OF TEXAS
H. A. FOROUZAN
77748
REGISTERED PROFESSIONAL ENGINEER
11/18/2025

CITY OF HOUSTON
HOUSTON PUBLIC WORKS

LIFT STATION REHABILITATION & RECONSTRUCTION
CONSENT DECREE

ANNUNCIATION LIFT STATION ELECTRICAL CONDUIT SCHEDULE

E-43

WBS NUMBER	FOR CITY OF HOUSTON USE ONLY
R-000267-0175-4	
DRAWING SCALE	
NONE	
CITY OF HOUSTON PM	
NP NAWARAJ PANTA, P.E.	
SHEET NO. 177 OF 312	

FILE PATH: O:\H8103_Houston Lift Station Removal And Replacement (CMAR)\5 Construction Phase\Addenda\Addendum No.1\Annunciation\Annunciation_E-07.dwg
PLOT STYLE: GAI.ctb PLOTTED: 1/14/2026 3:10 PM

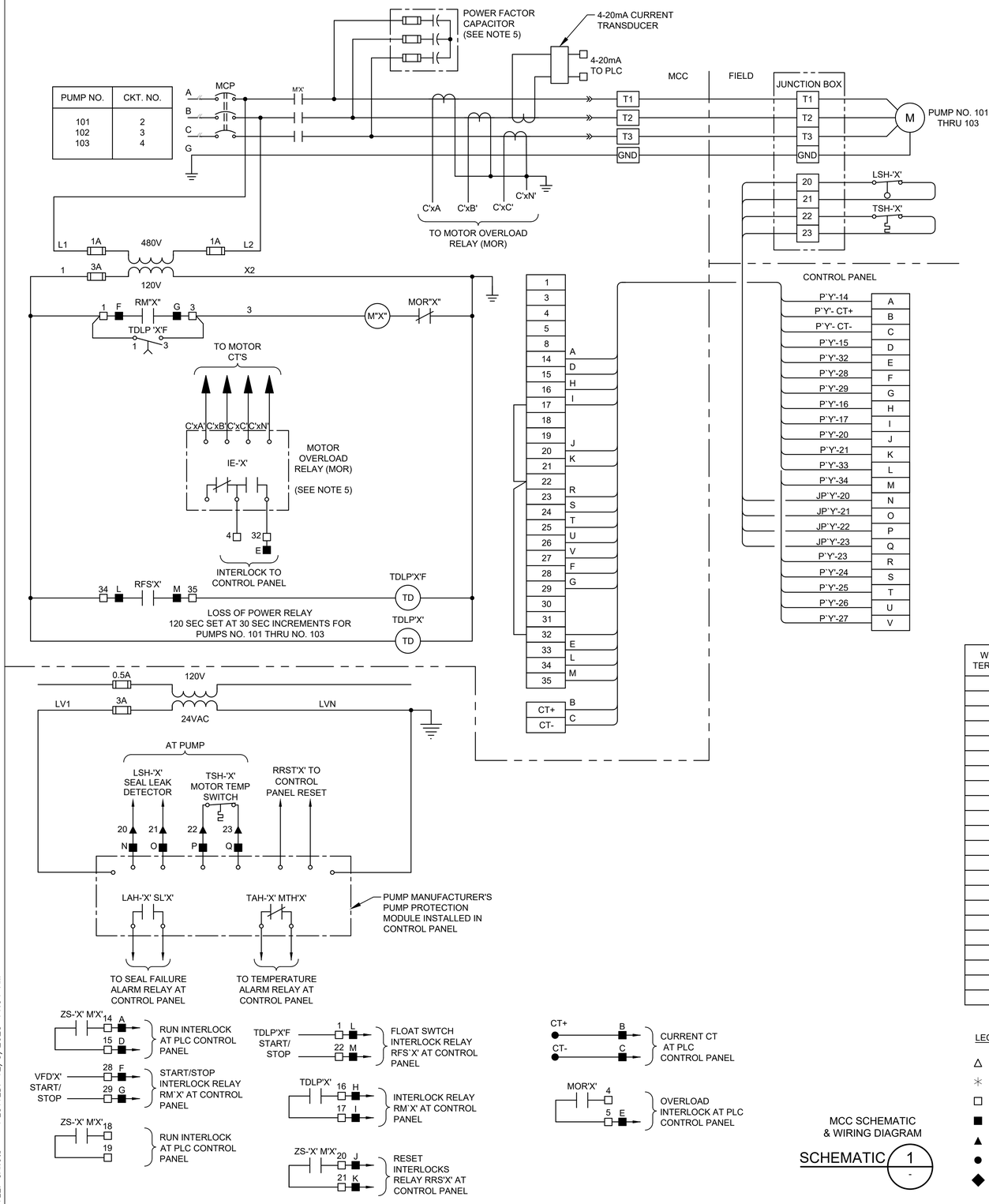

PUMP NO.	CKT. NO.
101	2
102	3
103	4

WIRE TAG OR TERMINAL LABEL	PUMP NO. 101	PUMP NO. 102	PUMP NO. 103	FUNCTION
A	3P1	3P2	3P3	24VDC CONTROL
B	124	224	324	4-20mA CURRENT TRANSDUCER
C	125	225	325	4-20mA CURRENT TRANSDUCER
D	116	216	316	M CONTACT
E	117	217	317	OVERLOAD ALARM
F	114	214	314	RUN INTERLOCK
G	115	215	315	RUN INTERLOCK
H	102	202	302	LOSS OF POWER TIMER
I	103	203	303	LOSS OF POWER TIMER
J	118	218	318	ALARM RESET INTERLOCK
K	119	219	319	ALARM RESET INTERLOCK
L	126	226	326	FLOAT SWITCH RUN INTERLOCK
M	127	227	327	FLOAT SWITCH RUN INTERLOCK
N	120	220	320	SEAL LEAK DETECTOR
O	121	221	321	SEAL LEAK DETECTOR
P	122	222	322	MOTOR TEMPERATURE SWITCH
Q	123	223	323	MOTOR TEMPERATURE SWITCH
R	109	209	309	VFD MODE
S	110	210	310	4-20mA VFD SPEED CONTROL
T	111	211	311	4-20mA VFD SPEED CONTROL
U	112	212	312	4-20mA VFD SPEED INDICATION
V	113	213	313	4-20mA VFD SPEED INDICATION

LEGEND

- △ DEVICE OR FIELD TERMINAL LOCATED AT MOTOR
- ✳ DEVICE OR FIELD TERMINAL LOCATED REMOTE
- □ DEVICE OR FIELD TERMINAL LOCATED AT POWER PANEL
- ■ FIELD TERMINAL LOCATED AT CONTROL PANEL
- ▲ REMOTE TERMINAL
- ● DEVICE TERMINAL NO.
- ◆ PC INTERFACE TERMINAL

MCC SCHEMATIC & WIRING DIAGRAM

SCHEMATIC 1 / -

NOTES:

1. THE 'X' NOTATION IN SCHEMATIC DESIGNATIONS REPRESENTS APPLICABLE PUMP NO. 101, 102, 103.
2. THE 'Y' NOTATION INDICATES MCC CIRCUIT NUMBER.
3. UNLESS OTHERWISE INDICATED, ALL DEVICES WITHOUT FURTHER DESIGNATION ARE LOCATED AT THE MOTOR CONTROL CENTER (MCC).
4. MOTOR OVERLOAD RELAY OUTPUT CONTACT SHOWN IS NORMALLY CLOSED WHEN RELAY IS DE-ENERGIZED. OPEN WHEN ENERGIZED, AND CLOSED WHEN IN ALARM. (VERIFY OPERATION OF RELAY PROVIDED AND ADJUST CONNECTION OF RMOR AUXILIARY RELAYS.)
5. CONTRACTOR TO COORDINATE POWER FACTOR CORRECTION CAPACITOR SIZE WITH PUMP MANUFACTURER.

NO.	DATE	REVISION	APP.

GAI
Gupta & Associates, Inc.
CONSULTING ENGINEERING
Registration No. F-2593
302 Dennis St.,
Houston, Texas 77006
Tel: 713-636-2936
Fax: 713-636-2967
email: hforouzan@gaiconsulting.com

ARCADIS
Infrastructure · Water · Environment · Buildings
1330 Post Oak Blvd, Suite 2250
Houston, TX 77056
Tel: 713-953-4800
Fax: 713-977-4620
www.arcadis.com
Texas Registered Engineering Firm F-533

SURVEYED BY: AMANI ENGR.
FB NO. P-6335

STATE OF TEXAS
H. A. FOROUZAN
77748
REGISTERED PROFESSIONAL ENGINEER
11/18/2025

CITY OF HOUSTON
HOUSTON PUBLIC WORKS

LIFT STATION REHABILITATION & RECONSTRUCTION CONSENT DECREE

ANNUNCIATION LIFT STATION MCC SCHEMATIC & WIRING DIAGRAM

E-44

WBS NUMBER	FOR CITY OF HOUSTON USE ONLY
R-000267-0175-4	
DRAWING SCALE	
NONE	
CITY OF HOUSTON PM	
NP NAWARAJ PANTA, P.E.	
SHEET NO 178 OF 312	

FILE PATH: O:\H8103_Houston Lift Station Removal And Replacement (CMAR)\6 Drawings\Electrical\Working\Annunciation\Annunciation_E-08.dwg
PLOT STYLE: GAI.ctb PLOTTED: 12/3/2025 11:04 AM

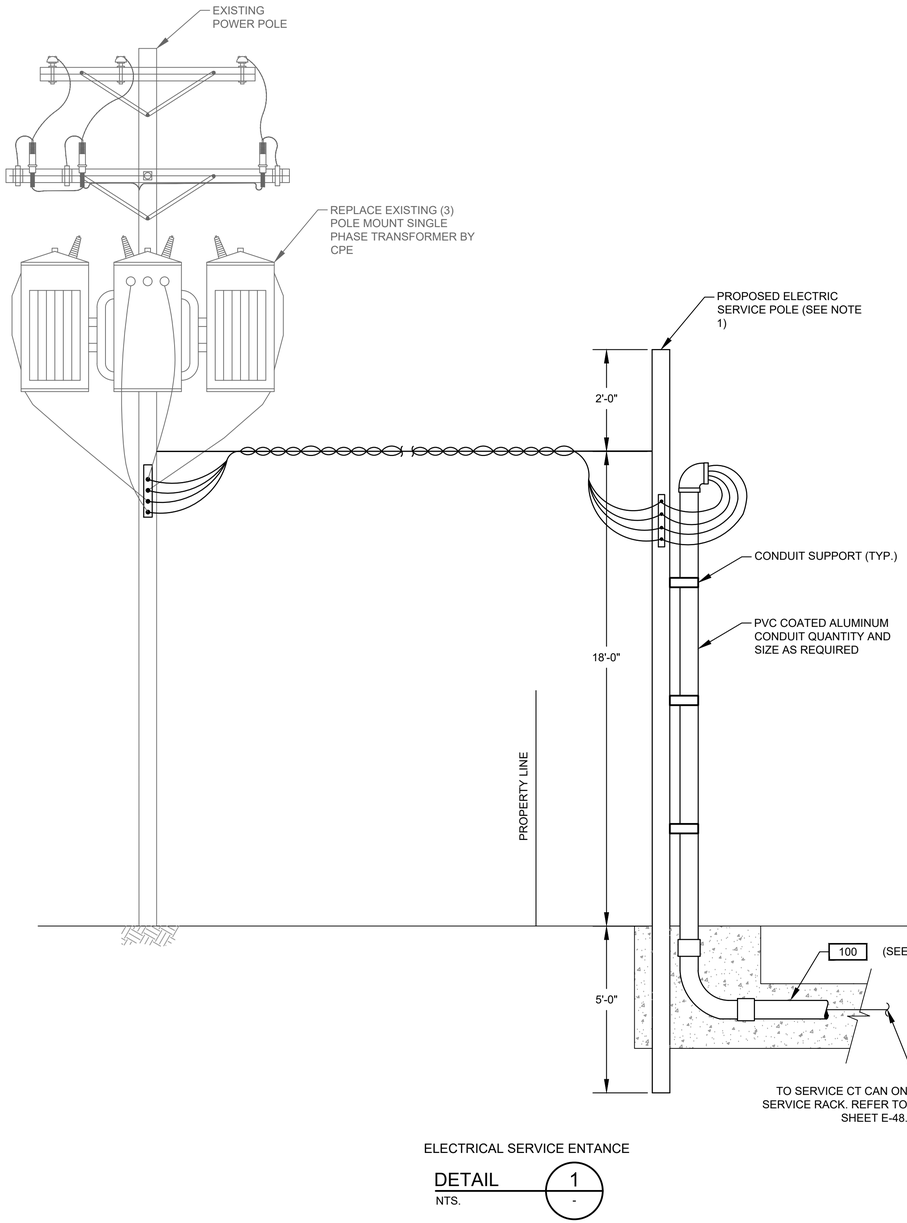

ELECTRICAL SERVICE ENTANCE

DETAIL 1 / NTS. -

NOTES:

1. CONCRETE POLE 25' LONG. TOP DIAMETER 7.63", BOTTOM DIAMETER 11.69" PROVIDED AND INSTALLED BY ELECTRICAL CONTRACTOR.
2. ELECTRICAL SERVICE FEEDER PROVIDED AND INSTALLED BY ELECTRICAL CONTRACTOR. COORDINATE WITH CPE FOR THE REQUIREMENTS OF THE INSTALLATION.

NO.	DATE	REVISION	APP.

GAI
Gupta & Associates, Inc.
CONSULTING ENGINEERING
Registration No. F-2593
302 Dennis St.,
Houston, Texas 77006
Tel: 713-636-2936
Fax: 713-636-2987
email: hforouzan@gaiconsulting.com

ARCADIS
Infrastructure · Water · Environment · Buildings
1330 Post Oak Blvd, Suite 2250
Houston, TX 77056
Tel: 713-953-4800
Fax: 713-977-4620
www.arcadis.com
Texas Registered Engineering Firm F-533

SURVEYED BY: AMANI ENGR.
FB NO. P-6335

STATE OF TEXAS
H. A. FOROUZAN
77748
REGISTERED
PROFESSIONAL ENGINEER
11/18/2025

CITY OF HOUSTON
HOUSTON PUBLIC WORKS

LIFT STATION REHABILITATION & RECONSTRUCTION
CONSENT DECREE

ANNUNCIATION LIFT STATION ELECTRICAL SERVICE POLE DETAILS

E-45

WBS NUMBER	FOR CITY OF HOUSTON USE ONLY
R-000267-0175-4	
DRAWING SCALE	
AS SHOWN	
CITY OF HOUSTON PM	
NP NAWARAJ PANTA, P.E.	
SHEET NO 179 OF 312	

FILE PATH: O:\H8103_Houston Lift Station Removal And Replacement (CMAR)\6 Drawings\Electrical\Working\Annunciation\Annunciation_E-09.dwg
PLOT STYLE: GAI.ctb PLOTTED: 12/3/2025 11:04 AM

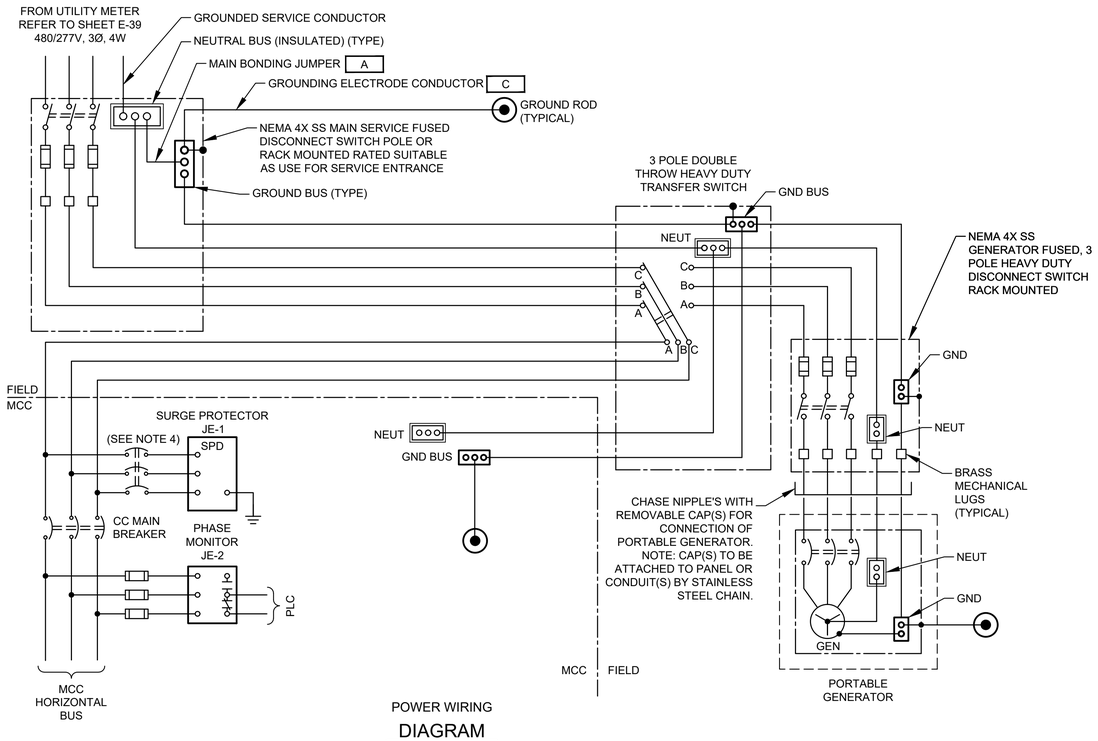

POWER WIRING

DIAGRAM

NTS

(SEE NOTE 3)

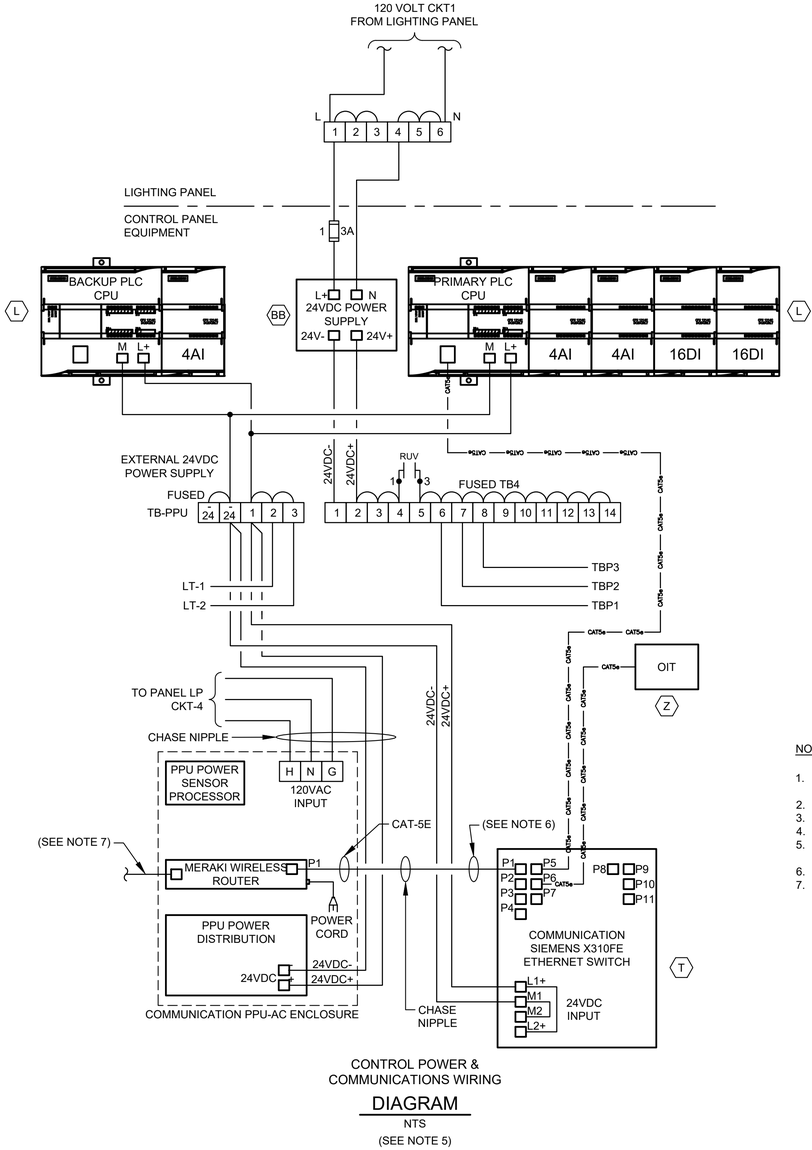

CONTROL POWER & COMMUNICATIONS WIRING

DIAGRAM

NTS

(SEE NOTE 5)

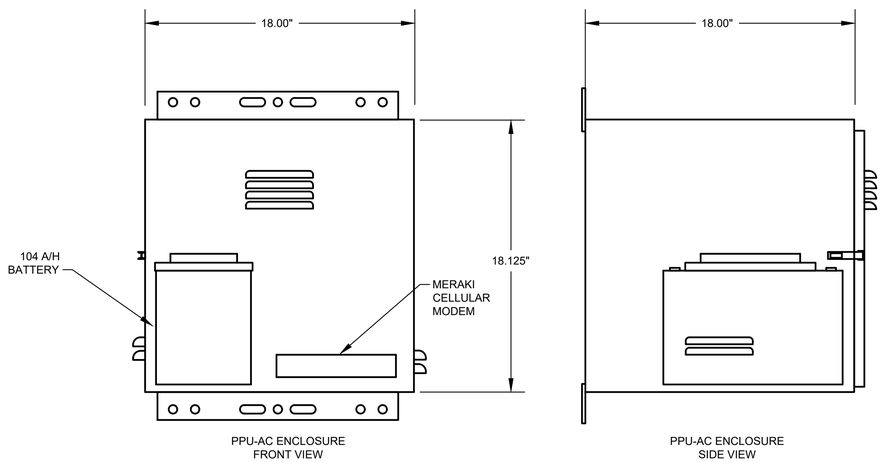

PPU-AC CONTROL ENCLOSURE

ELEVATION

NTS

NOTES:

1. UNLESS OTHERWISE INDICATED, ALL DEVICES WITHOUT FURTHER DESIGNATION ARE LOCATED AT THE MOTOR CONTROL CENTER (MCC).
2. REFER TO SPEC SECTION 16120 FOR CONDUCTOR COLOR CODE.
3. REFER TO E-39.
4. PROVIDE BREAKER SIZE ACCORDING TO MANUFACTURER'S REQUIREMENTS.
5. COMMUNICATION PPU-AC & SCADA SHALL BE PROVIDED BY CONTRACTOR INCLUDING TO RUN CONDUITS & WIRES.
6. ETHERNET CABLE FOR MERAKI CELLULAR ROUTER (P1).
7. POE CABLE TO RADIO.

NO.	DATE	REVISION	APP.

GAI
Gupta & Associates, Inc.
CONSULTING ENGINEERING
Registration No. F-2593
302 Dennis St.,
Houston, Texas 77006
Tel: 713-636-2936
Fax: 713-636-2987
email: hforouzan@gaiconsulting.com

ARCADIS
Infrastructure - Water - Environment - Buildings
1330 Post Oak Blvd, Suite 2250
Houston, TX 77056
Tel: 713-953-4800
Fax: 713-977-4620
www.arcadis.com
Texas Registered Engineering Firm F-533

SURVEYED BY: AMANI ENGR.
FB NO. P-6335

STATE OF TEXAS
H. A. FOROUZAN
77748
REGISTERED PROFESSIONAL ENGINEER
11/18/2025

CITY OF HOUSTON

HOUSTON PUBLIC WORKS

LIFT STATION REHABILITATION & RECONSTRUCTION CONSENT DECREE

ANNUNCIATION LIFT STATION MCC INCOMING POWER SCHEMATIC & COMM. DIA.

E-46

WBS NUMBER	FOR CITY OF HOUSTON USE ONLY
R-000267-0175-4	
DRAWING SCALE	
AS SHOWN	
CITY OF HOUSTON PM	
NP NAWARAJ PANTA, P.E.	
SHEET NO 180 OF 312	

FILE PATH: O:\H8103_Houston Lift Station Removal And Replacement (CMAR)\6 Drawings\Electrical\Working\Annunciation\Annunciation_E-10.dwg
PLOT STYLE: GAI.ctb PLOTTED: 12/3/2025 11:04 AM

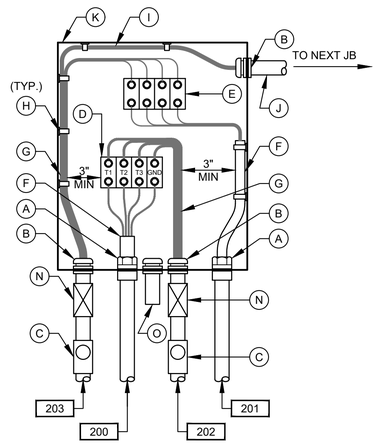

PUMP NO.1
JUNCTION BOX

DETAIL 3
NTS
(SEE NOTE 7)

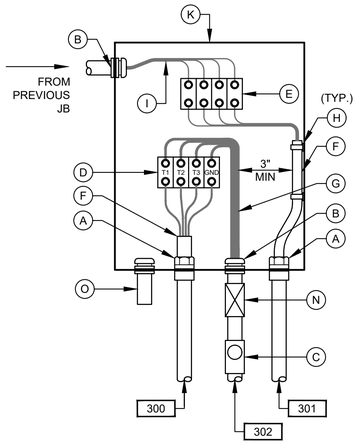

PUMP NO.2
JUNCTION BOX

DETAIL 4
NTS
(SEE NOTE 7)

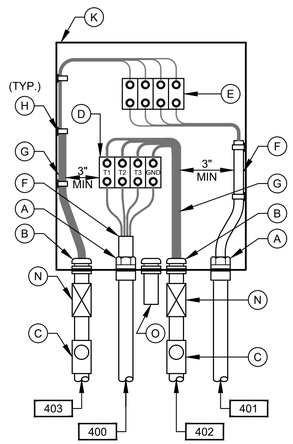

PUMP NO.3
JUNCTION BOX

DETAIL 5
NTS
(SEE NOTE 7)

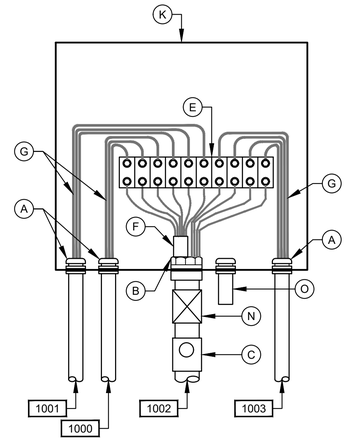

LEVEL TRANSMITTER
JUNCTION BOX

DETAIL 6
NTS
(SEE NOTE 7)

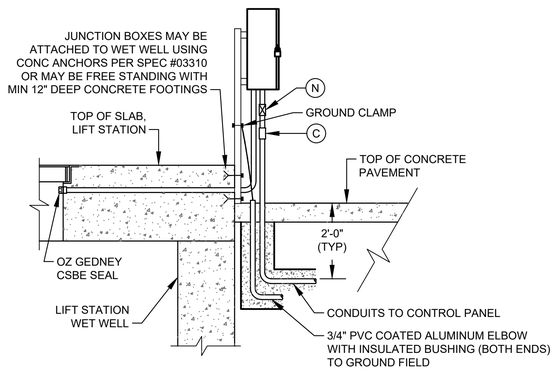

TYP SIDE VIEW FOR DETAIL 1, 2, & 7

(SEE NOTE 10)

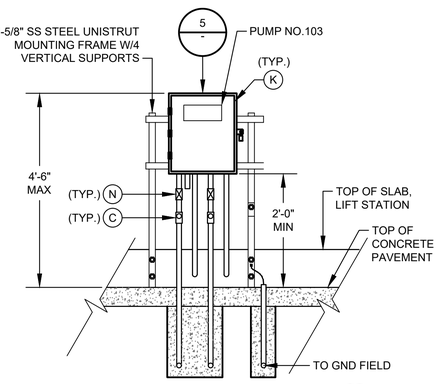

DETAIL 2
NTS
(SEE NOTE 7)

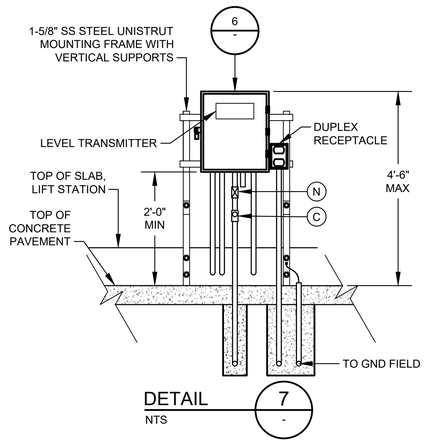

DETAIL 7
NTS

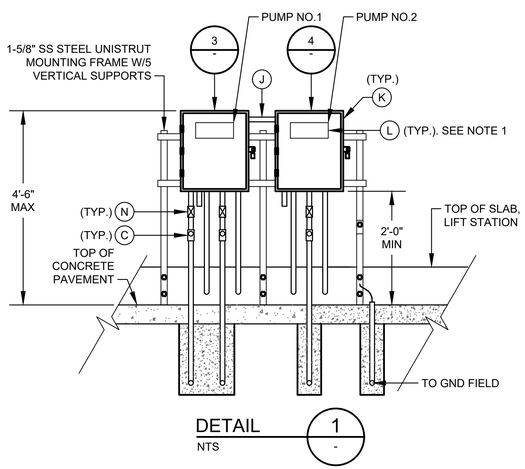

DETAIL 1
NTS

JUNCTION BOX EQUIPMENT SCHEDULE

- A - OZ GEDNEY CSBE SEAL
- B - WATERTIGHT CONDUIT HUB WITH INSULATED BUSHING
- C - CLASS I, DIV 1, EXPLOSION PROOF SEAL INSTALLED PER NEC DIV 501
- D - POWER TERMINAL BLOCK W/SCREW DOWN BOX LUGS
- E - CONTROL TERM BLOCK W/SCREW DOWN BOX LUGS
- F - MULTI-CONDUCTOR CABLE, REMOVE OUTER JACKET AS SHOWN
- G - WIRING AS SCHEDULED
- H - WIRING HARNESS PERMANENTLY AFFIXED
- I - PUMP CONTROL WIRING FROM PUMPS 2; 2 & 3; 4; OR D2, AS APPLICABLE
- J - 1 1/2" PVC COATED CONDUIT NIPPLE
- K - NEMA 6P STAINLESS STEEL JUNCTION BOX MINIMUM SIZE: 12"W X 16"H X 6"D
- L - NAMEPLATE, SEE SPECIFICATIONES (SEE NAMEPLATE SCHEDULE)
- M - MOTOR RATED SWITCH
- N - EXPANSION FITTING
- O - DRAIN VENT

NOTES:

1. NAMEPLATES SHALL BE MOUNTED TO JUNCTION BOXES USING 316 STAINLESS STEEL HARDWARE.
2. MAINTAIN MINIMUM SEPARATION REQUIRED UNDER NEC ARTICLE 504, BETWEEN INTRINSICALLY SAFE CONTROL WIRING AND NON INTRINSICALLY SAFE MOTOR FEEDER WIRING.
3. UNLESS OTHERWISE NOTED, ALL EXTERIOR EXPOSED CONDUITS SHALL BE PVC COATED ALUMINUM.
4. UNLESS OTHERWISE NOTED, ALL NUTS, BOLTS, SCREWS WASHERS, ETC SHALL BE TYPE 316 STAINLESS STEEL.
5. ALL UNDERGROUND CONDUITS TO BE ENCASED IN REINFORCED CONCRETE DUCTBANK.
6. PROVIDE ANTI-CORROSIVE SPRAY ON ANY BARE METAL PARTS OR EXPOSED WIRE.
7. SEE WIRING SCHEMATICS FOR TERMINALS AND WIRE NUMBERS.
8. ANY CONDUIT REQUIRING A CSBE SEAL, SHALL BE A MINIMUM SIZE OF 2 1/2" PER CABLE.
9. NOT USED.
10. COORDINATE WITH WASTE WATER OPERATIONS ELECTRICAL ORGANIZATION FOR THE OPENING OF JUNCTION BOXES TO THE SIDE OF WET WELL IF REQUIRED DURING CONSTRUCTION.
11. THE ENCLOSURES WITH ELECTRICAL CIRCUITS SHALL BE A MINIMUM OF 5 FEET FROM ANY CLASSIFIED AREA, OTHERWISE EXPLOSION PROOF TYPE ENCLOSURES SHALL BE USED.

NO.	DATE	REVISION	APP.

GAI
Gupta & Associates, Inc.
CONSULTING ENGINEERING
Registration No. F-2593
302 Dennis St.,
Houston, Texas 77006
Tel: 713-636-2936
Fax: 713-636-2987
email: hforouzan@gaiconsulting.com

ARCADIS
Infrastructure · Water · Environment · Buildings
1330 Post Oak Blvd, Suite 2250
Houston, TX 77056
Tel: 713-953-4800
Fax: 713-977-4620
www.arcadis.com
Texas Registered Engineering Firm F-533

SURVEYED BY: AMANI ENGR.
FB NO. P-6335

STATE OF TEXAS
H. A. FOROUZAN
77748
REGISTERED PROFESSIONAL ENGINEER
11/18/2025

CITY OF HOUSTON
HOUSTON PUBLIC WORKS

LIFT STATION REHABILITATION & RECONSTRUCTION CONSENT DECREE

ANNUNCIATION LIFT STATION TYPICAL JUNCTION BOX DETAILS

E-47

WBS NUMBER	FOR CITY OF HOUSTON USE ONLY
R-000267-0175-4	
DRAWING SCALE	
AS SHOWN	
CITY OF HOUSTON PM	
NP NAWARAJ PANTA, P.E.	
SHEET NO 181 OF 312	

FILE PATH: O:\H8103_Houston Lift Station Removal And Replacement (CMAR)\6 Drawings\Electrical\Working\Annunciation\Annunciation_E-11.dwg
PLOT STYLE: GAI.ctb PLOTTED: 12/3/2025 11:04 AM

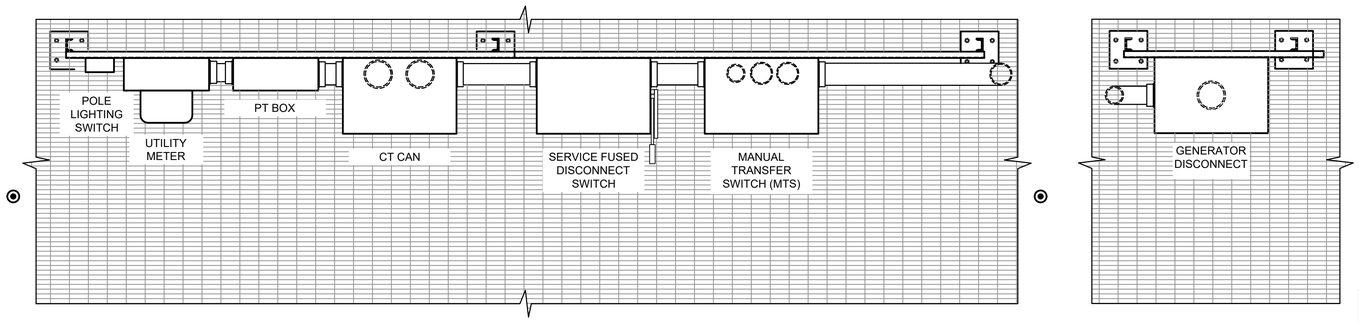

PLAN

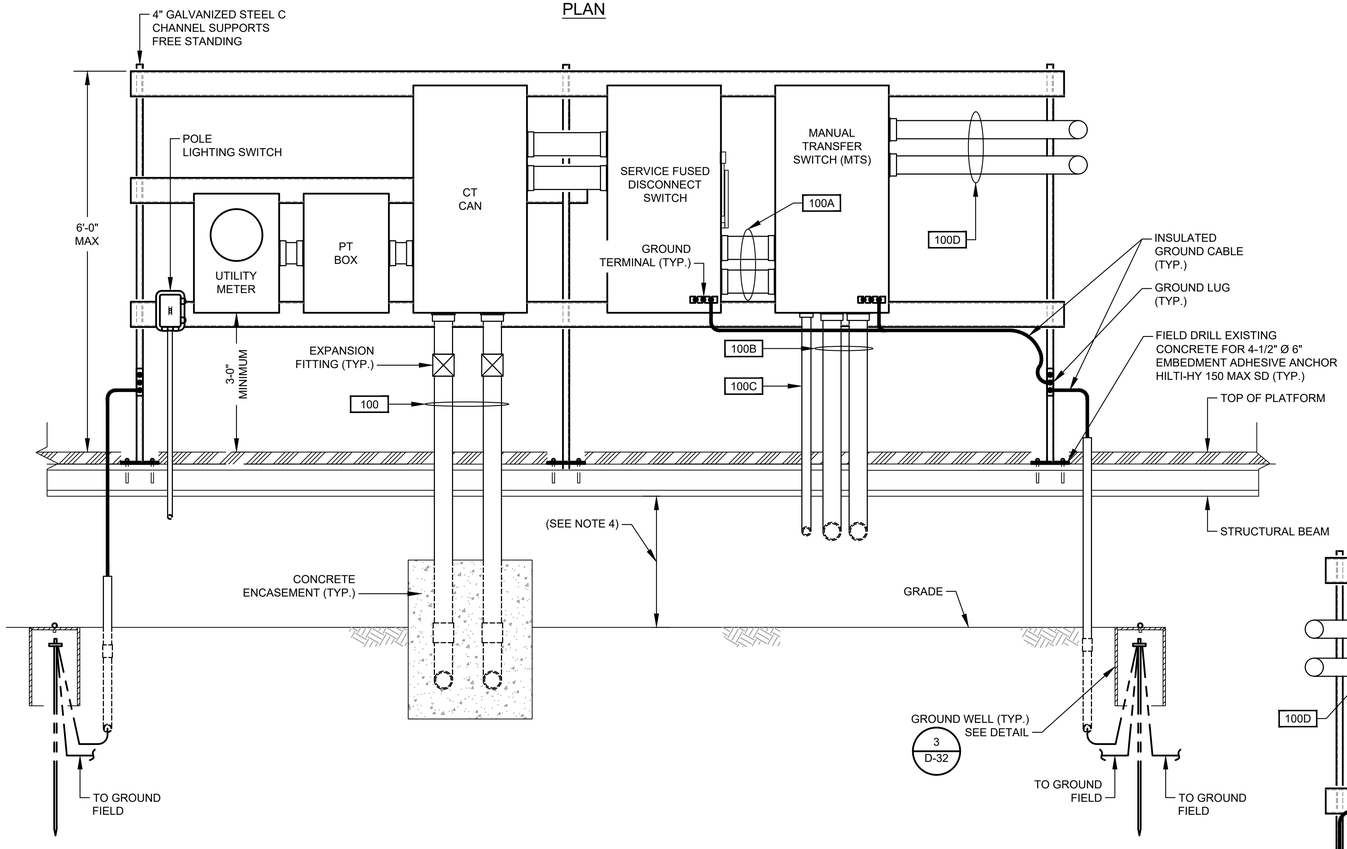

SERVICE MOUNTING RACK

DETAIL 1 / -
NTS.

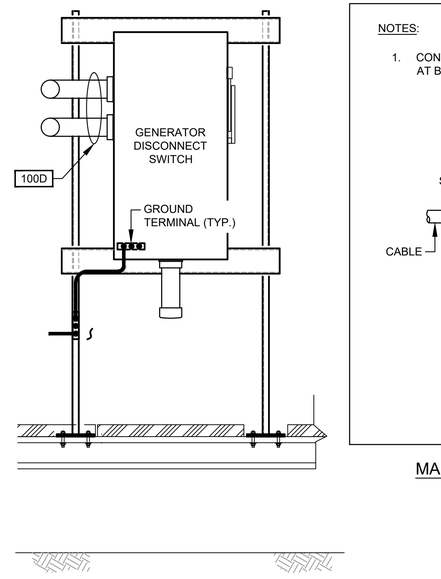

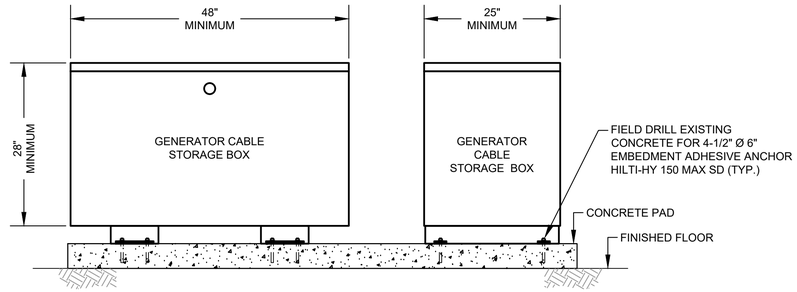

GENERATOR CABLE STORAGE BOX SIDE VIEW

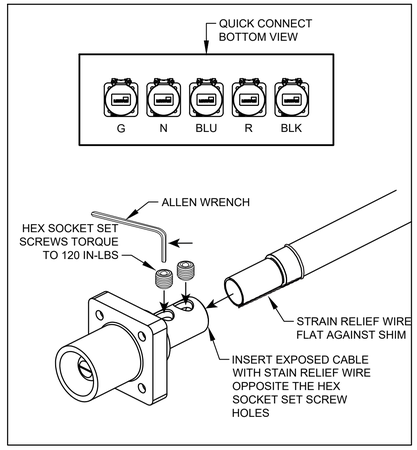

FEMALE PLUG CABLE TERMINATION

DETAIL - / -
NTS.

REFER TO PHOTO NO.1

DETAIL - / -
NTS.

ALLOWABLE DEVICE AMPACITY CHART DLO RHW-2 CAM-LOK CONNECTOR CABLE		
CABLE SIZE AWG	AMPS	CABLE LENGTH
#1	220	65 FEET
4/0	400	65 FEET

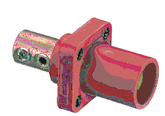

QUICK CONNECT FOR GENERATOR

PHOTOGRAPH 1 / -
NTS.

QUICK CONNECT FOR GENERATOR

PHOTOGRAPH 2 / -
NTS.

NOTES:

1. CHASE NIPPLE(S) WITH REMOVABLE CAP(S) FOR CONNECTION OF PORTABLE GENERATOR. NOTE: CAP(S) TO BE ATTACHED TO PANEL OR CONDUIT(S) BY STAINLESS STEEL CHAIN.
2. T.O.C DEFINED AS TOP OF PAVEMENT OR TOP OF PANEL ENCLOSURE PEDESTAL WHICHEVER IS HIGHER. (SEE NOTE B).
3. PROVIDE CENTER BOLLARD WHEN SPACE BETWEEN OUTSIDE BOLLARDS IS GREATER THEN 4'-0".
4. SEE STRUCTURAL DRAWINGS FOR ELEVATION.

NOTES:

1. CONTRACTOR TO INSTALL CONNECTORS AT BOTH ENDS OF CABLE.

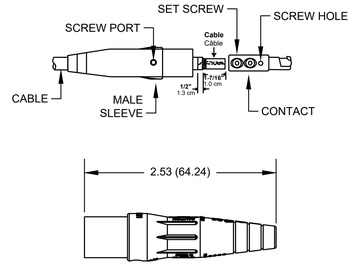

MALE PLUG CABLE TERMINATION

DETAIL - / -
NTS.

REFER TO PHOTO NO.2

GAI
Gupta & Associates, Inc.
CONSULTING ENGINEERING
Registration No. F-2593
302 Dennis St.,
Houston, Texas 77006
Tel: 713-636-2936
Fax: 713-636-2967
email: hforouzan@gaiconsulting.com

ARCADIS
Infrastructure · Water · Environment · Buildings
1330 Post Oak Blvd, Suite 2250
Houston, TX 77056
Tel: 713-953-4800
Fax: 713-977-4620
www.arcadis.com
Texas Registered Engineering Firm F-533

SURVEYED BY: AMANI ENGR.
FB NO. P-6335

STATE OF TEXAS
H. A. FOROUZAN
77748
REGISTERED PROFESSIONAL ENGINEER
11/18/2025

CITY OF HOUSTON

HOUSTON PUBLIC WORKS

LIFT STATION REHABILITATION & RECONSTRUCTION CONSENT DECREE

ANNUNCIATION LIFT STATION ELECTRICAL SERVICE RACK DETAIL

E-48

WBS NUMBER	FOR CITY OF HOUSTON USE ONLY
R-000267-0175-4	
DRAWING SCALE	
AS SHOWN	
CITY OF HOUSTON PM	
NP NAWARAJ PANTA, P.E.	
SHEET NO 182 OF 312	

APP. | REVISION | NO. | DATE

FILE PATH: O:\H8103_Houston Lift Station Removal And Replacement (CMAR)\6 Drawings\Electrical\Working\Annunciation\Annunciation_E-12.dwg
PLOT STYLE: GAI.ctb PLOTTED: 12/3/2025 11:04 AM

HMI

INFLUENT PUMP NO. 101

SEAL FAIL ALARM	MOTOR OVERLOAD ALARM	MOTOR CURRENT	HIGH TEMP ALARM	IN HAND	IN AUTO	ON/OFF	START/ STOP
MA 1	MO 1	II 1	TH 1	HI 1	IA 1	YFS 1	YCS 1

INFLUENT PUMP NO. 102

SEAL FAIL ALARM	MOTOR OVERLOAD ALARM	MOTOR CURRENT	HIGH TEMP ALARM	IN HAND	IN AUTO	ON/OFF	START/ STOP
MA 2	MO 2	II 2	TH 2	HI 2	IA 2	YFS 2	YCS 2

INFLUENT PUMP NO. 103

SEAL FAIL ALARM	MOTOR OVERLOAD ALARM	MOTOR CURRENT	HIGH TEMP ALARM	IN HAND	IN AUTO	ON/OFF	START/ STOP
MA 3	MO 3	II 3	TH 3	HI 3	IA 3	YFS 3	YCS 3

CONTROL PANEL PLC

CONTROL BUILDING

480V

INFLUENT PUMPS MCC

INFLUENT PUMP NO. 101 — H/O/A — RUN

INFLUENT PUMP NO. 102 — H/O/A — RUN

INFLUENT PUMP NO. 103 — H/O/A — RUN

PRIMARY PLC

BACKUP PLC

INFLUENT PUMP CONTROL PANEL

ALARMS RESET

OIT

TO SHEET I-39

I-39

I-39

WET WELL

LT 1

LE 1

LT 2

LE 2

FS2 HIGH-HIGH LEVEL FLOAT SWITCH

LSH 1A

TSH 1A

LSH 2A

TSH 2A

FS1 HIGH LEVEL FLOAT SWITCH

LSH 3A

TSH 3A

M

12" 2" ARV 12" CHKVLV 12" PLV 16"

12" 2" ARV 12" CHKVLV 12" PLV 16" X 12" 16"

12" 2" ARV 12" CHKVLV 12" PLV 16" X 12" INFLUENT DISCHARGE

APP. | REVISION | NO. | DATE

GAI
Gupta & Associates, Inc.
CONSULTING ENGINEERING
Registration No. F-2593
302 Dennis St.,
Houston, Texas 77006
Tel: 713-636-2936
Fax: 713-636-2987
email: hforouzan@gaiconsulting.com

ARCADIS
Infrastructure · Water · Environment · Buildings
1330 Post Oak Blvd, Suite 2250
Houston, TX 77056
Tel: 713-953-4800
Fax: 713-977-4620
www.arcadis.com
Texas Registered Engineering Firm F-533

SURVEYED BY: AMANI ENGR.
FB NO. P-6335

STATE OF TEXAS
H. A. FOROUZAN
77748
REGISTERED PROFESSIONAL ENGINEER
11/18/2025

CITY OF HOUSTON

HOUSTON PUBLIC WORKS

LIFT STATION REHABILITATION & RECONSTRUCTION CONSENT DECREE

ANNUNCIATION LIFT STATION PROCESS & INSTRUMENTATION DIAGRAM-I

I-38

WBS NUMBER	FOR CITY OF HOUSTON USE ONLY
R-000267-0175-4	
DRAWING SCALE	
NONE	
CITY OF HOUSTON PM	
NP NAWARAJ PANTA, P.E.	
SHEET NO 183 OF 312	

FILE PATH: O:\H8103_Houston Lift Station Removal And Replacement (CMAR)\6 Drawings\Instrumentation And Control\Working\Annunciation\Annunciation_I-01.dwg
PLOT STYLE: GAI.ctb PLOTTED: 12/3/2025 11:04 AM

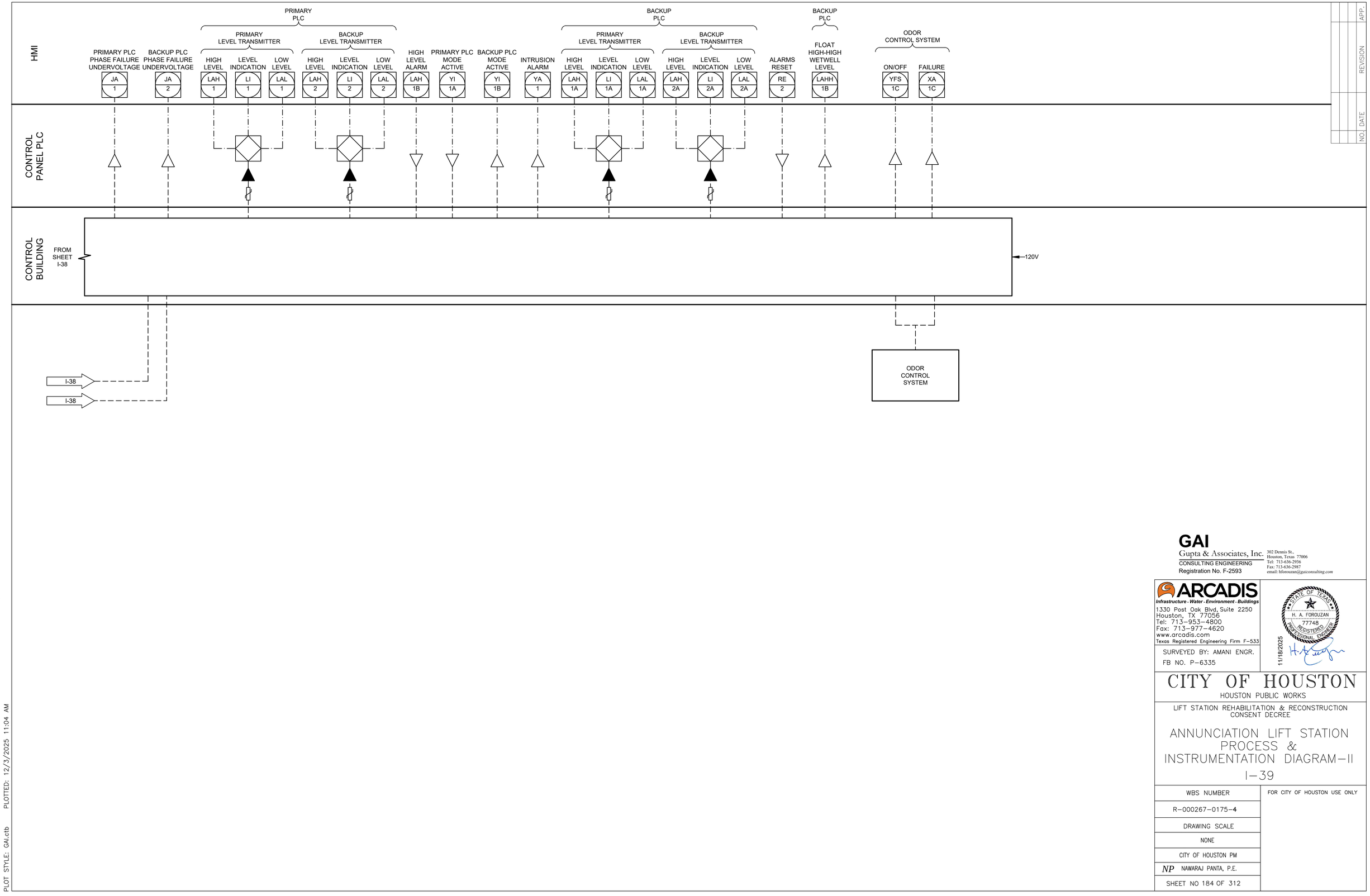

APP.
REVISION
NO. DATE

FILE PATH: O:\H8103_Houston Lift Station Removal And Replacement (CMAR)\6 Drawings\Instrumentation And Control\Working\Annunciation\Annunciation_I-02.dwg
PLOT STYLE: GAI.ctb PLOTTED: 12/3/2025 11:04 AM

GAI
Gupta & Associates, Inc.
CONSULTING ENGINEERING
Registration No. F-2593
302 Dennis St.,
Houston, Texas 77006
Tel: 713-636-2936
Fax: 713-636-2987
email: hforouzan@gaiconsulting.com

ARCADIS
Infrastructure · Water · Environment · Buildings
1330 Post Oak Blvd, Suite 2250
Houston, TX 77056
Tel: 713-953-4800
Fax: 713-977-4620
www.arcadis.com
Texas Registered Engineering Firm F-533

SURVEYED BY: AMANI ENGR.
FB NO. P-6335

STATE OF TEXAS
H. A. FOROUZAN
77748
REGISTERED PROFESSIONAL ENGINEER
11/18/2025

CITY OF HOUSTON
HOUSTON PUBLIC WORKS

LIFT STATION REHABILITATION & RECONSTRUCTION
CONSENT DECREE

ANNUNCIATION LIFT STATION PROCESS & INSTRUMENTATION DIAGRAM-II

I-39

WBS NUMBER	FOR CITY OF HOUSTON USE ONLY
R-000267-0175-4	
DRAWING SCALE	
NONE	
CITY OF HOUSTON PM	
NP NAWARAJ PANTA, P.E.	
SHEET NO 184 OF 312	

EQUIPMENT AND DEVICE SCHEDULE

ITEM	QUANTITY	DESCRIPTION
A	1	SINGLE CHANNEL INTRINSICALLY SAFE RELAY
B	2	ANALOG SIGNAL ISOLATOR
C	4	PUMP PROTECTION MODULE
D	*	NOT USED
E	4	HAND-OFF-AUTO SWITCH, 3 POSITION, HEAVY-DUTY OIL TIGHT WITH 2 SETS OF CONTACT BLOCKS (PUMP CONTROL)
F	4	INDICATING LIGHT, HEAVY DUTY, OILTIGHT, RED, 24 VDC, LED, WITH "RUN" LEGEND
G	*	NOT USED.
H	1	SWITCH FOR CABINET LIGHT, 120V, 20A, SPST
I	2	DUPLEX RECEPTACLE, 120V, 20A, 2 WIRE, GROUNDED, GFCI TYPE
J	1	24" LED STRIP LIGHT 120V SUITABLE FOR ZERO DEGREE OPERATION
K	*	NAMEPLATES, SEE SPECIFICATIONS (SEE NAMEPLATE SCHEDULE)
L	2	PROGRAMMABLE LOGIC CONTROLLER WITH EXPANSION UNIT
M	*	CONTROL RELAY 24VDC RELAY WITH THREE FORM C CONTACTS AND 11 PIN SOCKET BASE
N	-	NOT USED
O	-	NOT USED
P	1	NEMA 12 GASKETED STEEL ENCLOSURES WITHOUT VENTS 72" H X 20" D X 48" W
Q	*	TERMINAL BLOCK
R	1	WIRE DUCT 2" WIDE X 2" DEEP MINIMUM
S	1	GROUND BUS
T	1	COMMUNICATION ETHERNET SWITCH
U	9	CARTRIDGE
V	1	PUSHBUTTON, BLACK WITH RESET LEGEND
W	-	NOT USED
X	*	FUSED TERMINAL BLOCKS
Y	1	POWER SURGE PROTECTOR - CONTROL POWER
Z	1	PROGRAMMING SCREEN (OIT)
AA	*	120VAC SYSTEM FUSES
BB	1	120VAC - 24VDC POWER SUPPLY, 5A
CC	*	NOT USED
DD	2	INDICATING LIGHT, HEAVY DUTY, OILTIGHT, GREEN, 24VDC, LED WITH "BACKUP PLC" & "PRIMARY PLC" LEGEND
EE	2	ANALOG I/O SURGE SUPPRESSOR
FF	-	NOT USED

* - AS SCHEDULED

NAMEPLATE SCHEDULE

DESIGNATION	ENGRAVED
N1	PUMP STATION DESIGNATION
N2	PUMP NO. 1
N3	PUMP NO. 2
N4	PUMP NO. 3
N5	PUMP NO. 4
N6	NOT USED.
N7	NOT USED.
N8	NOT USED.
N9	NOT USED.
N10	PROGRAMMING SCREEN
N11	NOT USED.
N12	PRIMARY PLC
N13	BACKUP PLC
N14	MOTOR DATA HORSEPOWER (OUTPUT) ---------- RPM AT FULL LOAD ---------- TIME RATING ---------- FREQUENCY ---------- NUMBER OF PHASES ---------- MODEL NUMBER ---------- RATED VOLTAGE ---------- SERVICE FACTOR ---------- FULL LOAD AMPS ---------- INSULATION CLASS ---------- NEMA DESIGN LETTER ---------- TEMPERATURE RISE ---------- NEMA FRAME SIZE ---------- DATE OF MANUFACTURE ---------- THERMO PROTECTION (IF REQUIRED) -- MOISTURE PROTECTION (IF REQUIRED)-

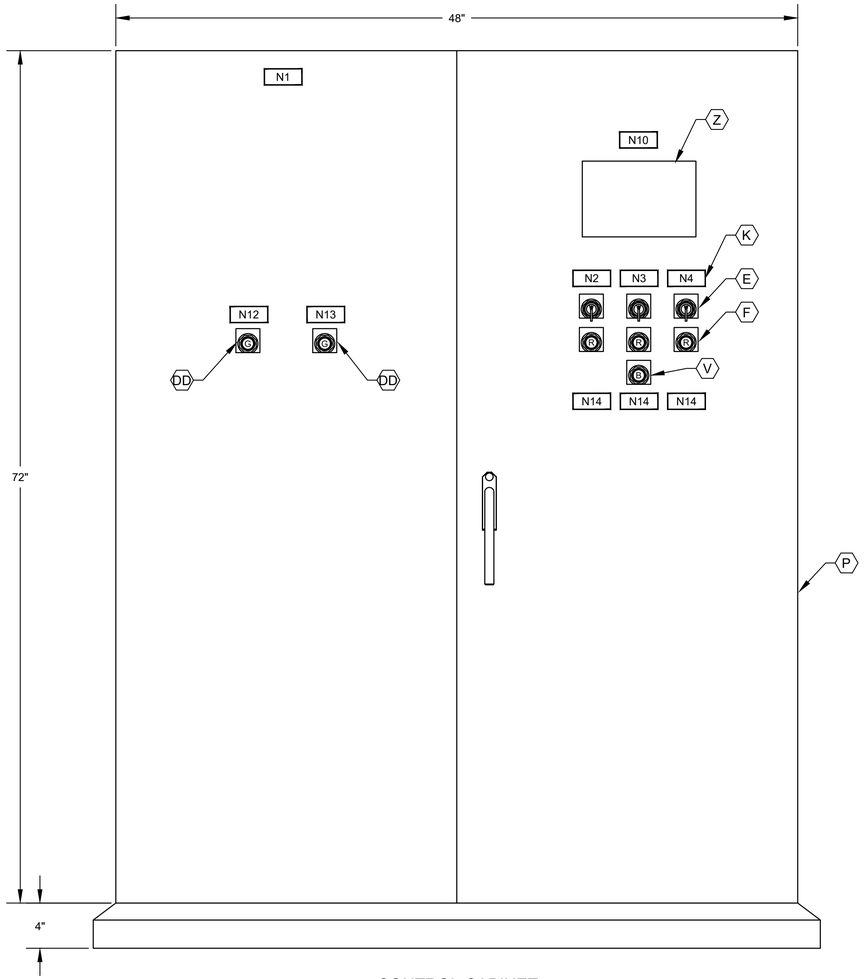

CONTROL CABINET
FRONT DOOR ELEVATION

NOTES:

1. NAMEPLATES SHALL BE MOUNTED TO PANELS USING STAINLESS STEEL HARDWARE.
2. REFER SPECIFICATIONS FOR ALL PANEL COMPONENTS.

NO.	DATE	REVISION	APP.

GAI
Gupta & Associates, Inc.
CONSULTING ENGINEERING
Registration No. F-2593
302 Dennis St.,
Houston, Texas 77006
Tel: 713-636-2936
Fax: 713-636-2987
email: hforouzan@gaiconsulting.com

ARCADIS
Infrastructure · Water · Environment · Buildings
1330 Post Oak Blvd, Suite 2250
Houston, TX 77056
Tel: 713-953-4800
Fax: 713-977-4620
www.arcadis.com
Texas Registered Engineering Firm F-533

STATE OF TEXAS
H. A. FOROUZAN
77748
REGISTERED PROFESSIONAL ENGINEER
11/18/2025

SURVEYED BY: AMANI ENGR.
FB NO. P-6335

CITY OF HOUSTON
HOUSTON PUBLIC WORKS

LIFT STATION REHABILITATION & RECONSTRUCTION CONSENT DECREE

ANNUNCIATION LIFT STATION CONTROL CABINET EQUIPMENT LAYOUT & SCHEDULE

I-40

WBS NUMBER	FOR CITY OF HOUSTON USE ONLY
R-000267-0175-4	
DRAWING SCALE	
NONE	
CITY OF HOUSTON PM	
NP NAWARAJ PANTA, P.E.	
SHEET NO 185 OF 312	

FILE PATH: O:\H8103_Houston Lift Station Removal And Replacement (CMAR)\6 Drawings\Instrumentation And Control\Working\Annunciation\Annunciation_I-03.dwg
PLOT STYLE: GAI.ctb PLOTTED: 12/3/2025 11:04 AM

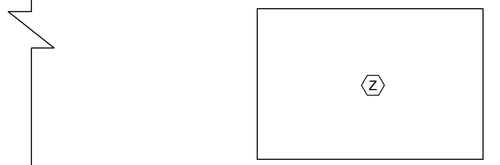

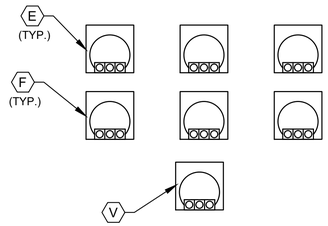

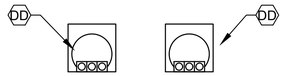

CONTROL CABINET
BACK DOOR ELEVATION

NOTES:

1. SEE SHEET I-40 FOR EQUIPMENT SCHEDULE.

NO.	DATE	REVISION	APP.

GAI
Gupta & Associates, Inc.
CONSULTING ENGINEERING
Registration No. F-2593
302 Dennis St.,
Houston, Texas 77006
Tel: 713-636-2936
Fax: 713-636-2987
email: hforouzan@gaiconsulting.com

ARCADIS
Infrastructure · Water · Environment · Buildings
1330 Post Oak Blvd, Suite 2250
Houston, TX 77056
Tel: 713-953-4800
Fax: 713-977-4620
www.arcadis.com
Texas Registered Engineering Firm F-533

SURVEYED BY: AMANI ENGR.
FB NO. P-6335

STATE OF TEXAS
H. A. FOROUZAN
77748
REGISTERED
PROFESSIONAL ENGINEER
11/18/2025

CITY OF HOUSTON
HOUSTON PUBLIC WORKS

LIFT STATION REHABILITATION & RECONSTRUCTION
CONSENT DECREE

ANNUNCIATION LIFT STATION CONTROL CABINET BACK DOOR ELEVATION

I-41

WBS NUMBER	FOR CITY OF HOUSTON USE ONLY
R-000267-0175-4	
DRAWING SCALE	
NONE	
CITY OF HOUSTON PM	
NP NAWARAJ PANTA, P.E.	
SHEET NO 186 OF 312	

FILE PATH: O:\H8103_Houston Lift Station Removal And Replacement (CMAR)\6 Drawings\Instrumentation And Control\Working\Annunciation\Annunciation_I-04.dwg
PLOT STYLE: GAI.ctb PLOTTED: 12/3/2025 11:04 AM

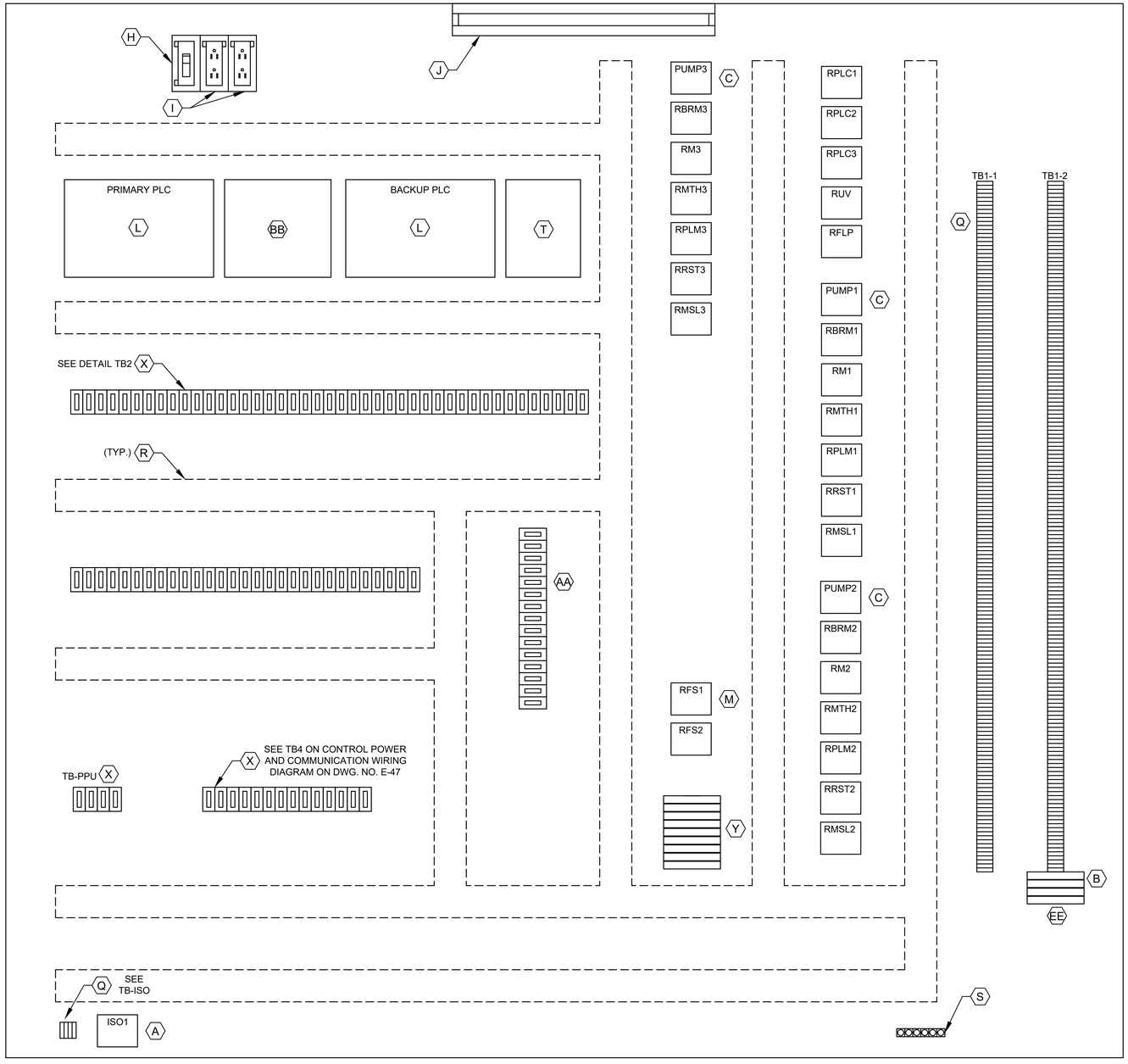

CONTROL PANEL ELEVATION

LEGEND	
TAG	DESCRIPTION
RMTH	MOTOR HIGH TEMPERATURE ALARM RELAY
RPLMP	PLC PUMP RUN RELAY
RRST	PUMP RESET AUX RELAY
RPLC	PLC MODE AUX RELAY
RM	PUMP RUN AUX RELAY
RUV	UNDER VOLTAGE RELAY
RBRM	BACKUP SYSTEM RUN RELAY
ISO	INTRINSICALLY SAFE RELAY
RFS	PUMP RUN FLOAT SWITCH RELAY
RMSL	MOTOR SEAL LEAK ALARM RELAY
RFLP	FLOAT LOCKOUT PUMP RELAY

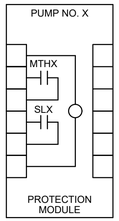

PUMP PROTECTION MODULE DETAIL, ITEM C

NOTE: REPLACE "X" WITH APPROPRIATE PUMP NO.

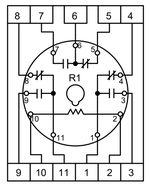

RELAY DETAIL ITEM M

L1A
L1N
SPARE
3
3N
SPARE
49
50
51
52
53
54
1004
1
24V-
24V-
SPARE
1002
2
11
1001
1001A
12
1003
1003A
34
3N
19
20
102
103
3P1
109
110
112
116
117
120
121
122
123
124
125
126
127
SPARE
SPARE
202
203
3P2
209
210
212
216
217
220
221
222
223
224
225
226
227

DETAIL TB1-1

SPARE
SPARE
302
303
3P3
309
310
312
316
317
320
321
322
323
324
325
326
327
SPARE
SPARE

DETAIL TB1-2

36A
37A
50
52
54
52A
52A
54A
L+
M
35B
38B
41B
44B
SPARE
SPARE
47B
50B
53B
13B
13AB
B
L+
M
14B
14AB
14GB
119
SPARE
L+
M
13
13A
13G
14
14A
14G
1M
2M
1L
3
30
32
34
37
38
41
33B
45
18B
SPARE

DETAIL TB2

100
112
113
114
115
117
118
119
120
121
SPARE
200
212
213
214
215
217
218
219
220
221
SPARE
300
312
313
314
315
317
318
319
320
321
SPARE

DETAIL TB2

1500
1501
1503
1504

DETAIL TB-ISO

NOTES:

1. SEE SHEET I-40 FOR EQUIPMENT SCHEDULE.

GAI
Gupta & Associates, Inc.
CONSULTING ENGINEERING
Registration No. F-2593
302 Dennis St.,
Houston, Texas 77006
Tel: 713-636-2936
Fax: 713-636-2987
email: hforouzan@gaiconsulting.com

ARCADIS
Infrastructure · Water · Environment · Buildings
1330 Post Oak Blvd, Suite 2250
Houston, TX 77056
Tel: 713-953-4800
Fax: 713-977-4620
www.arcadis.com
Texas Registered Engineering Firm F-533

SURVEYED BY: AMANI ENGR.
FB NO. P-6335

STATE OF TEXAS
H. A. FOROUZAN
77748
REGISTERED PROFESSIONAL ENGINEER
11/18/2025

CITY OF HOUSTON

HOUSTON PUBLIC WORKS

LIFT STATION REHABILITATION & RECONSTRUCTION CONSENT DECREE

ANNUNCIATION LIFT STATION CONTROL CABINET EQUIPMENT LAYOUT

I-42

WBS NUMBER	FOR CITY OF HOUSTON USE ONLY
R-000267-0175-4	
DRAWING SCALE	
NONE	
CITY OF HOUSTON PM	
NP NAWARAJ PANTA, P.E.	
SHEET NO 187 OF 312	

NO.	DATE	REVISION	APP.

FILE PATH: O:\H8103_Houston Lift Station Removal And Replacement (CMAR)\6 Drawings\Instrumentation And Control\Working\Annunciation\Annunciation_I-05.dwg
PLOT STYLE: GAI.ctb PLOTTED: 12/3/2025 11:04 AM

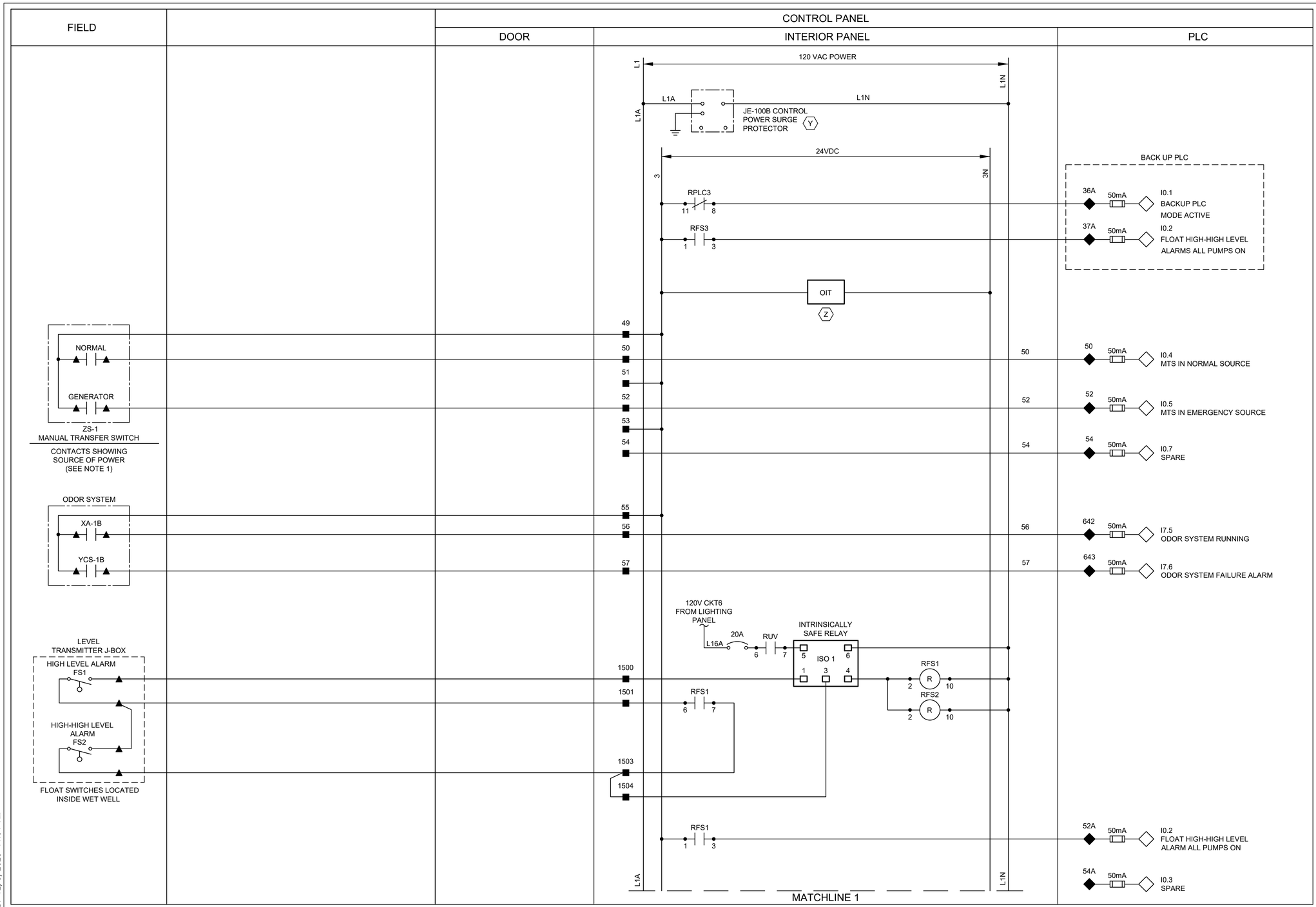

LEGEND

- △ DEVICE OR FIELD TERMINAL LOCATED AT MOTOR
- ✳ DEVICE OR FIELD TERMINAL LOCATED REMOTE
- □ DEVICE OR FIELD TERMINAL LOCATED AT MCC/POWER PANEL
- ■ FIELD TERMINAL LOCATED AT CONTROL PANEL
- ▲ REMOTE TERMINAL
- ● DEVICE TERMINAL NO.
- ◆ PLC INTERFACE TERMINAL

NOTES:

1. PROVIDE MANUAL TRANSFER SWITCH DRY CONTACT.
2. ALL FLOAT CONTROL CIRCUIT WIRES COLOR SHALL BE YELLOW.

NO.	DATE	REVISION	APP.

GAI
Gupta & Associates, Inc.
CONSULTING ENGINEERING
Registration No. F-2593
302 Dennis St.,
Houston, Texas 77006
Tel: 713-636-2936
Fax: 713-636-2987
email: hforouzan@gaiconsulting.com

ARCADIS
Infrastructure · Water · Environment · Buildings
1330 Post Oak Blvd, Suite 2250
Houston, TX 77056
Tel: 713-953-4800
Fax: 713-977-4620
www.arcadis.com
Texas Registered Engineering Firm F-533

STATE OF TEXAS
H. A. FOROUZAN
77748
REGISTERED
PROFESSIONAL ENGINEER
11/18/2025

SURVEYED BY: AMANI ENGR.
FB NO. P-6335

CITY OF HOUSTON
HOUSTON PUBLIC WORKS

LIFT STATION REHABILITATION & RECONSTRUCTION
CONSENT DECREE

ANNUNCIATION LIFT STATION CONTROL WIRING DIAGRAM-I

I-43

WBS NUMBER	FOR CITY OF HOUSTON USE ONLY
R-000267-0175-4	
DRAWING SCALE	
NONE	
CITY OF HOUSTON PM	
NP NAWARAJ PANTA, P.E.	
SHEET NO 188 OF 312	

FILE PATH: O:\H8103_Houston Lift Station Removal And Replacement (CMAR)\6 Drawings\Instrumentation And Control\Working\Annunciation\Annunciation_I-06.dwg
PLOT STYLE: GAI.ctb PLOTTED: 12/3/2025 11:04 AM

FIELD	MOTOR CONTROL CENTER (INDOOR)	CONTROL PANEL	
		DOOR	INTERIOR PANEL

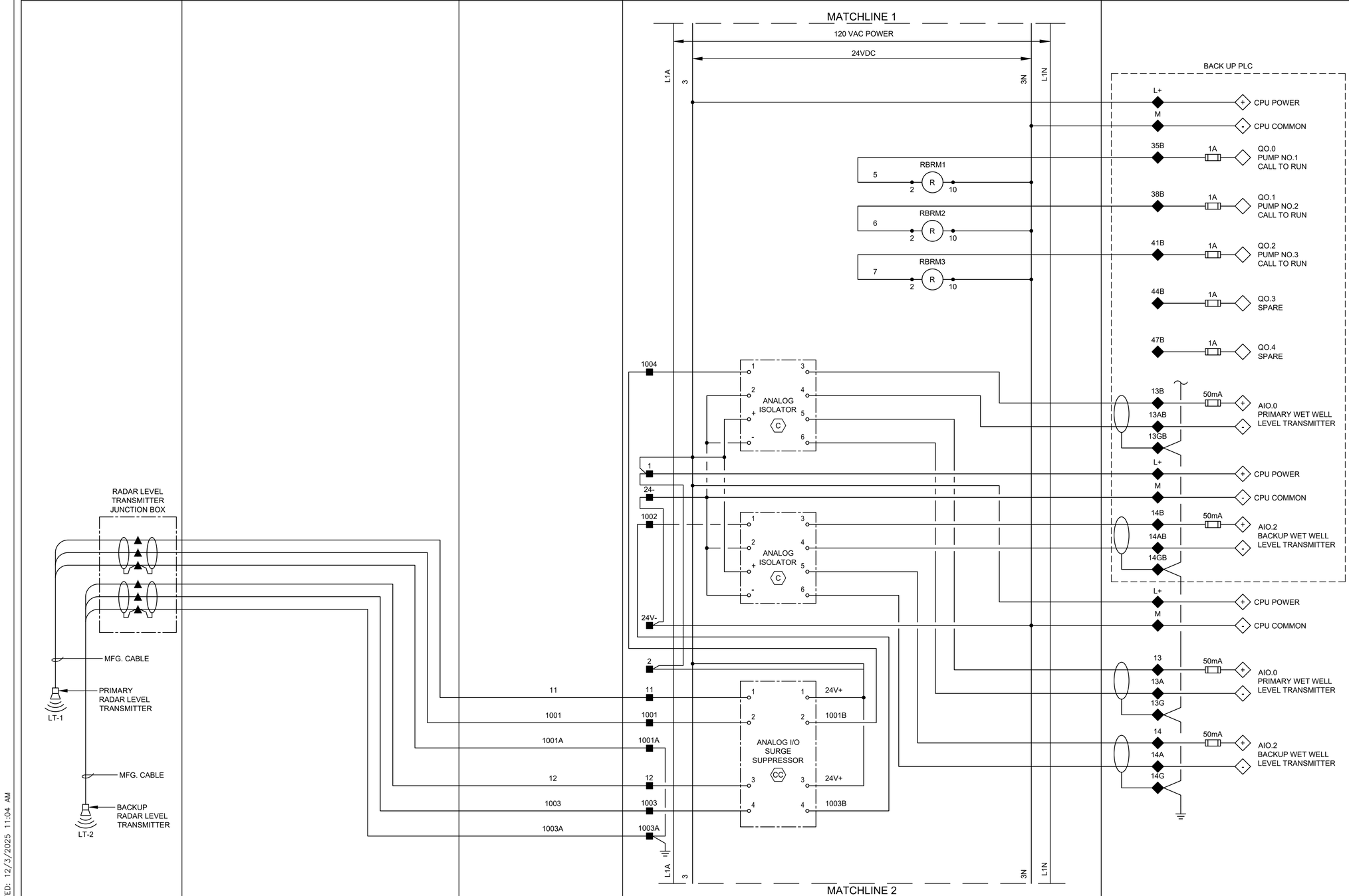

LEGEND

- △ DEVICE OR FIELD TERMINAL LOCATED AT MOTOR
- ✳ DEVICE OR FIELD TERMINAL LOCATED REMOTE
- □ DEVICE OR FIELD TERMINAL LOCATED AT MCC/POWER PANEL
- ■ FIELD TERMINAL LOCATED AT CONTROL PANEL
- ▲ REMOTE TERMINAL
- ● DEVICE TERMINAL NO.
- ◆ PLC INTERFACE TERMINAL

NO.	DATE	REVISION	APP.

GAI
Gupta & Associates, Inc.
CONSULTING ENGINEERING
Registration No. F-2593
302 Dennis St.,
Houston, Texas 77006
Tel: 713-636-2936
Fax: 713-636-2987
email: hforouzan@gaiconsulting.com

ARCADIS
Infrastructure · Water · Environment · Buildings
1330 Post Oak Blvd, Suite 2250
Houston, TX 77056
Tel: 713-953-4800
Fax: 713-977-4620
www.arcadis.com
Texas Registered Engineering Firm F-533

STATE OF TEXAS
H. A. FOROUZAN
77748
REGISTERED
PROFESSIONAL ENGINEER
11/18/2025

SURVEYED BY: AMANI ENGR.
FB NO. P-6335

CITY OF HOUSTON

HOUSTON PUBLIC WORKS

LIFT STATION REHABILITATION & RECONSTRUCTION CONSENT DECREE

ANNUNCIATION LIFT STATION CONTROL WIRING DIAGRAM-II

I-44

WBS NUMBER	FOR CITY OF HOUSTON USE ONLY
R-000267-0175-4	
DRAWING SCALE	
NONE	
CITY OF HOUSTON PM	
NP NAWARAJ PANTA, P.E.	
SHEET NO 189 OF 312	

FILE PATH: O:\H8103_Houston Lift Station Removal And Replacement (CMAR)\6 Drawings\Instrumentation And Control\Working\Annunciation\Annunciation_I-07.dwg
PLOT STYLE: GAI.ctb PLOTTED: 12/3/2025 11:04 AM

FIELD | MOTOR CONTROL CENTER | CONTROL PANEL: DOOR | CONTROL PANEL: INTERIOR PANEL | PLC

MATCHLINE 2

120 VAC POWER

24VDC

L1A

24+

24-

L1N

M1 M2 9

10

19

20

RFLP
R
2 10

1M DI COMMON

2M AI COMMON

1L DO POWER

3 DO POWER

L1

N

MS

MOTION SWITCH

30 1A Q0.0 SPARE

32 50mA I0.0 PLC INTRUSION ALARM

L1

N

MS

MOTION SWITCH

34

34

RUV
R
2 10

34 50mA I0.1 PHASE FAILURE UNDER VOLTAGE

37 50mA I0.3 SPARE

38 50mA Q0.1 PLC MODE ACTIVE

RPLC1
R
2 10

RPLC2
R
2 10

YI-1
G
PRIMARY PLC

41 50mA I0.2 SPARE

RPLC3
R
2 10

BACK UP PLC

33B 50mA Q0.6 SPARE

ØA ØB ØC

JE-2 PHASE MONITOR

7 8 9 10 11 12

RPLC3
6 5

YI-2
G
BACKUP PLC

N/C

YI-2 BUILDING EXTERIOR ALARM LIGHT
R

45 50mA Q0.2 HIGH LEVEL ALARM

BACK UP PLC

RUV
11 9

18B 50mA I0.0 PHASE FAILURE UNDER VOLTAGE

L1A

24+

24-

L1N

MATCHLINE 3

LEGEND

△ DEVICE OR FIELD TERMINAL LOCATED AT MOTOR

✳ DEVICE OR FIELD TERMINAL LOCATED REMOTE

□ DEVICE OR FIELD TERMINAL LOCATED AT MCC/POWER PANEL

■ FIELD TERMINAL LOCATED AT CONTROL PANEL

▲ REMOTE TERMINAL

● DEVICE TERMINAL NO.

◆ PLC INTERFACE TERMINAL

NO.	DATE	REVISION	APP.

GAI
Gupta & Associates, Inc.
CONSULTING ENGINEERING
Registration No. F-2593
302 Dennis St.,
Houston, Texas 77006
Tel: 713-636-2936
Fax: 713-636-2967
email: hforouzan@gaiconsulting.com

ARCADIS
Infrastructure · Water · Environment · Buildings
1330 Post Oak Blvd, Suite 250
Houston, TX 77056
Tel: 713-953-4800
Fax: 713-977-4620
www.arcadis.com
Texas Registered Engineering Firm F-533

SURVEYED BY: AMANI ENGR.

FB NO. P-6335

STATE OF TEXAS
H. A. FOROUZAN
77748
REGISTERED PROFESSIONAL ENGINEER

11/18/2025

CITY OF HOUSTON

HOUSTON PUBLIC WORKS

LIFT STATION REHABILITATION & RECONSTRUCTION CONSENT DECREE

ANNUNCIATION LIFT STATION CONTROL WIRING DIAGRAM–III

I–45

WBS NUMBER	FOR CITY OF HOUSTON USE ONLY
R–000267–0175–4	
DRAWING SCALE	
NONE	
CITY OF HOUSTON PM	
NP NAWARAJ PANTA, P.E.	
SHEET NO 190 OF 312	

FILE PATH: O:\H8103_Houston Lift Station Removal And Replacement (CMAR)\6 Drawings\Instrumentation And Control\Working\Annunciation\Annunciation_I–08.dwg
PLOT STYLE: GAI.ctb PLOTTED: 12/3/2025 11:04 AM

FIELD | MOTOR CONTROL CENTER | CONTROL PANEL: DOOR | INTERIOR PANEL | PLC

PUMP NO.101
M
T1 T2 T3 G
A B C
Aϕ Bϕ Cϕ
M1
4-20mA CURRENT TRANSDUCER
CT
MCP
MCC CKT 2
1A 1A
CPT - 480-120VAC 1PH, 250VA MIN
X1-1 3A X2-1

TDLP1F TD 2 10
TDLP1 TD 2 10
TDLP1 1 3
M1
X1-1
ZS-1 M
MOR1
TDLP1F 1 3
M1

IE-1
MOTOR OVERLOAD RELAY (MOR) (SEE NOTE 1)
A B C
MOR1
M1

0.5A 3A
CPT - 120-24VAC 1PH, 50VA
LAH-1 SL1
TAH-1 MTH1
RESET
PUMP PROTECTION MODULE

LSH-1 SEAL LEAK DETECTOR
TSH-1 MOTOR TEMP SWITCH
TERMINAL JUNCTION BOX

HS-1 H-O-A
HS-1A RESET
TO SHEET I-47

24 VDC POWER
24+ 24-
3P1 3N1

TBP1 SEE NOTE 2
RMTH1 RMSL1
RPLMP1 RM1
RPLC1 RBRM1 RPLC1 RPLMP1
RM1
RFS1 RMSL1
YI-1 R
RRST1 RMTH1
RMTH1
RRST1
RRST1 RMSL1
RMSL1
RRST1 RMTH1
TO 219 ON SHEET I-47

PLC	
AI0.8	PUMP NO.101 MOTOR CURRENT
Q0.7	PUMP NO.101 CALL TO RUN
I3.1	PUMP NO.101 IN HAND
I3.0	PUMP NO.101 IN AUTO
I3.2	PUMP NO.101 SEAL FAILURE ALARM
I0.7	PUMP NO.101 ON/OFF
I3.3	PUMP NO.101 MOTOR OVERLOAD ALARM
I0.6	ALARMS RESET
Q0.4	ALARMS RESET
I1.1	PUMP NO.101 HIGH TEMPERATURE ALARM

LEGEND
- △ DEVICE OR FIELD TERMINAL LOCATED AT MOTOR
- ✳ DEVICE OR FIELD TERMINAL LOCATED REMOTE
- □ DEVICE OR FIELD TERMINAL LOCATED AT MCC/POWER PANEL
- ■ FIELD TERMINAL LOCATED AT CONTROL PANEL
- ▲ REMOTE TERMINAL
- ● DEVICE TERMINAL NO.
- ◆ PLC INTERFACE TERMINAL

NOTES:
1. MOTOR OVERLOAD RELAY OUTPUT CONTACT SHOWN NORMALLY CLOSED WHEN RELAY IS DE-ENERGIZED, OPEN WHEN ENERGIZED, AND CLOSED WHEN IN ALARM. VERIFY OPERATION OF RELAY PROVIDED AND ADJUST CONNECTION OF RMOR AUXILIARY RELAYS.
2. FUSED TERMINAL ON TERMINAL BLOCK TB4 SEE CONTROL POWER AND COMMUNICATION WIRING DIAGRAM DRAWING NO. E-47.
3. ALL FLOAT CONTROL CIRCUIT WIRES COLOR SHALL BE YELLOW.

NO.	DATE	REVISION	APP.

GAI
Gupta & Associates, Inc.
CONSULTING ENGINEERING
Registration No. F-2593
302 Dennis St., Houston, Texas 77006
Tel: 713-636-2936
Fax: 713-636-2987
email: hforouzan@gaiconsulting.com

ARCADIS
Infrastructure - Water - Environment - Buildings
1330 Post Oak Blvd, Suite 2250
Houston, TX 77056
Tel: 713-953-4800
Fax: 713-977-4620
www.arcadis.com
Texas Registered Engineering Firm F-533

SURVEYED BY: AMANI ENGR.
FB NO. P-6335

STATE OF TEXAS H. A. FOROUZAN 77748 REGISTERED PROFESSIONAL ENGINEER
11/18/2025

CITY OF HOUSTON
HOUSTON PUBLIC WORKS

LIFT STATION REHABILITATION & RECONSTRUCTION CONSENT DECREE

ANNUNCIATION LIFT STATION CONTROL WIRING DIAGRAM PUMP-101

I-46

WBS NUMBER	FOR CITY OF HOUSTON USE ONLY
R-000267-0175-4	
DRAWING SCALE	
NONE	
CITY OF HOUSTON PM	
NP NAWARAJ PANTA, P.E.	
SHEET NO 191 OF 312	

FILE PATH: O:\H8103_Houston Lift Station Removal And Replacement (CMAR)\6 Drawings\Instrumentation And Control\Working\Annunciation\Annunciation_I-09.dwg
PLOT STYLE: GAI.ctb PLOTTED: 12/3/2025 11:05 AM

FIELD | MOTOR CONTROL CENTER | CONTROL PANEL: DOOR | INTERIOR PANEL | PLC

PUMP NO.102
M
T1 T2 T3 G
A B C
Aϕ Bϕ Cϕ
M1
4-20mA CURRENT TRANSDUCER
MCP
CT
MCC CKT 3
1A 1A
CPT - 480-120VAC 1PH, 250VA MIN
X1-2 3A X2-2
TDLP2F TDLP2 TDLP2
M2
X1-2
ZS-2 MOR2 TDLP2F
M2
IE-2
MOTOR OVERLOAD RELAY (MOR) (SEE NOTE 1)
A B C MOR2
M2
0.5A 3A
CPT - 120-24VAC 1PH, 50VA
LSH-2 SEAL LEAK DETECTOR
TSH-2 MOTOR TEMP SWITCH
TERMINAL JUNCTION BOX
LAH-2 SL2
TAH-2 MTH2
RESET
PUMP PROTECTION MODULE

24 VDC POWER
24+ 24-
TBP2 SEE NOTE 2
RMTH2 RMSL2
3P2 3N2
HS-2 H-O-A
RPLMP2 RM2
RPLC1 RBRM2
RPLC1 RPLMP2
RM2
RFS2 RMSL2
YI-2
RRST2 RMTH2
RMTH2
RRST2
RMSL2
FROM SHEET I-46
TO SHEET I-48
FROM 119 ON SHEET I-46
TO 319 ON SHEET I-48

212 50mA AI1.0 PUMP NO.102 MOTOR CURRENT
200 1A Q1.0 PUMP NO.102 CALL TO RUN
214 50mA I3.5 PUMP NO.102 IN HAND
215 50mA I3.4 PUMP NO.102 IN AUTO
221 50mA I3.6 PUMP NO.102 SEAL FAILURE ALARM
213 50mA I1.2 PUMP NO.102 ON/OFF
217 50mA I3.7 PUMP NO.102 MOTOR OVERLOAD ALARM
220 50mA I1.3 PUMP NO.102 HIGH TEMPERATURE ALARM

LEGEND
△ DEVICE OR FIELD TERMINAL LOCATED AT MOTOR
✳ DEVICE OR FIELD TERMINAL LOCATED REMOTE
□ DEVICE OR FIELD TERMINAL LOCATED AT MCC/POWER PANEL
■ FIELD TERMINAL LOCATED AT CONTROL PANEL
▲ REMOTE TERMINAL
● DEVICE TERMINAL NO.
◆ PLC INTERFACE TERMINAL

NOTES:

1. MOTOR OVERLOAD RELAY OUTPUT CONTACT SHOWN NORMALLY CLOSED WHEN RELAY IS DE-ENERGIZED, OPEN WHEN ENERGIZED, AND CLOSED WHEN IN ALARM. VERIFY OPERATION OF RELAY PROVIDED AND ADJUST CONNECTION OF RMOR AUXILIARY RELAYS.
2. FUSED TERMINAL ON TERMINAL BLOCK TB4 SEE CONTROL POWER AND COMMUNICATION WIRING DIAGRAM DRAWING NO. E-46.
3. ALL FLOAT CONTROL CIRCUIT WIRES COLOR SHALL BE YELLOW.

GAI
Gupta & Associates, Inc.
CONSULTING ENGINEERING
Registration No. F-2593
302 Dennis St., Houston, Texas 77006
Tel: 713-636-2936
Fax: 713-636-2987
email: hforouzan@gaiconsulting.com

ARCADIS
Infrastructure · Water · Environment · Buildings
1330 Post Oak Blvd, Suite 2250
Houston, TX 77056
Tel: 713-953-4800
Fax: 713-977-4620
www.arcadis.com
Texas Registered Engineering Firm F-533
SURVEYED BY: AMANI ENGR.
FB NO. P-6335

STATE OF TEXAS H. A. FOROUZAN 77748 REGISTERED PROFESSIONAL ENGINEER
11/18/2025

CITY OF HOUSTON
HOUSTON PUBLIC WORKS

LIFT STATION REHABILITATION & RECONSTRUCTION CONSENT DECREE

ANNUNCIATION LIFT STATION CONTROL WIRING DIAGRAM PUMP-102

I-47

WBS NUMBER	FOR CITY OF HOUSTON USE ONLY
R-000267-0175-4	
DRAWING SCALE	
NONE	
CITY OF HOUSTON PM	
NP NAWARAJ PANTA, P.E.	
SHEET NO 192 OF 312	

NO.	DATE	REVISION	APP.

FILE PATH: O:\H8103_Houston Lift Station Removal And Replacement (CMAR)\6 Drawings\Instrumentation And Control\Working\Annunciation\Annunciation_I-10.dwg
PLOT STYLE: GAI.ctb PLOTTED: 12/3/2025 11:05 AM

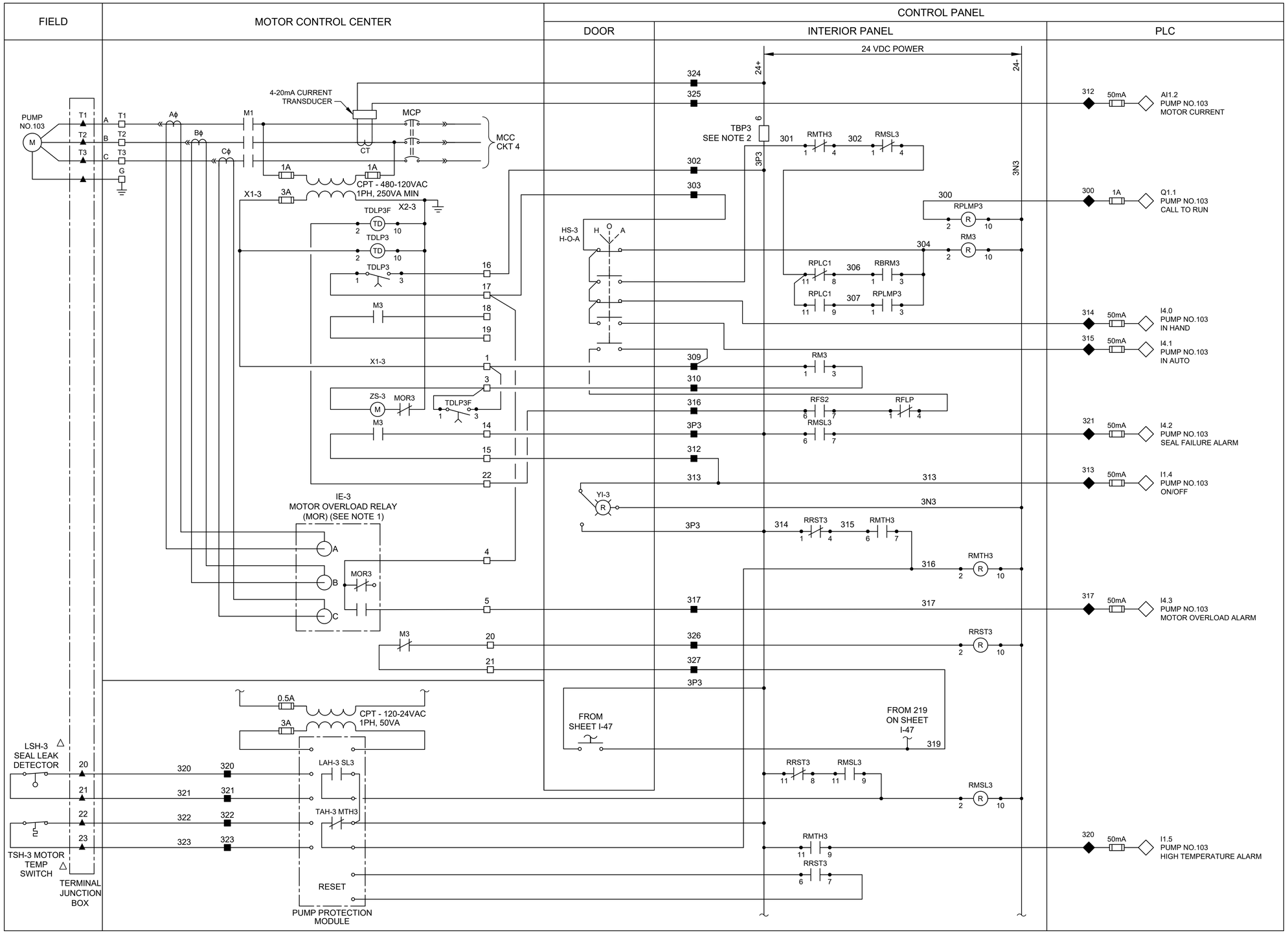

LEGEND

- △ DEVICE OR FIELD TERMINAL LOCATED AT MOTOR
- ✳ DEVICE OR FIELD TERMINAL LOCATED REMOTE
- □ DEVICE OR FIELD TERMINAL LOCATED AT MCC/POWER PANEL
- ■ FIELD TERMINAL LOCATED AT CONTROL PANEL
- ▲ REMOTE TERMINAL
- ● DEVICE TERMINAL NO.
- ◆ PLC INTERFACE TERMINAL

NOTES:

1. MOTOR OVERLOAD RELAY OUTPUT CONTACT SHOWN NORMALLY CLOSED WHEN RELAY IS DE-ENERGIZED, OPEN WHEN ENERGIZED, AND CLOSED WHEN IN ALARM. VERIFY OPERATION OF RELAY PROVIDED AND ADJUST CONNECTION OF RMOR AUXILIARY RELAYS.
2. FUSED TERMINAL ON TERMINAL BLOCK TB4 SEE CONTROL POWER AND COMMUNICATION WIRING DIAGRAM DRAWING NO. E-46.
3. ALL FLOAT CONTROL CIRCUIT WIRES COLOR SHALL BE YELLOW.

GAI
Gupta & Associates, Inc.
CONSULTING ENGINEERING
Registration No. F-2593
302 Dennis St., Houston, Texas 77006
Tel: 713-636-2936
Fax: 713-636-2987
email: hforouzan@gaiconsulting.com

ARCADIS
Infrastructure · Water · Environment · Buildings
1330 Post Oak Blvd, Suite 2250
Houston, TX 77056
Tel: 713-953-4800
Fax: 713-977-4620
www.arcadis.com
Texas Registered Engineering Firm F-533

SURVEYED BY: AMANI ENGR.
FB NO. P-6335

STATE OF TEXAS
H. A. FOROUZAN
77748
REGISTERED PROFESSIONAL ENGINEER
11/18/2025

CITY OF HOUSTON

HOUSTON PUBLIC WORKS

LIFT STATION REHABILITATION & RECONSTRUCTION CONSENT DECREE

ANNUNCIATION LIFT STATION CONTROL WIRING DIAGRAM PUMP-103

I-48

WBS NUMBER	FOR CITY OF HOUSTON USE ONLY
R-000267-0175-4	
DRAWING SCALE	
NONE	
CITY OF HOUSTON PM	
NP NAWARAJ PANTA, P.E.	
SHEET NO 193 OF 312	

NO.	DATE	REVISION	APP.

FILE PATH: O:\H8103_Houston Lift Station Removal And Replacement (CMAR)\6 Drawings\Instrumentation And Control\Working\Annunciation\Annunciation_I-11.dwg
PLOT STYLE: GAI.ctb PLOTTED: 12/3/2025 11:05 AM

SUMMARY TABLE	
LIFT STATION NAME	EMNORA #2
LIFT STATION NUMBER	FN065
ADDRESS	10662 EMNORA LN
KEY MAP	449R

FLOODPLAIN TABLE	
FREQUENCY	WATER SURFACE ELEVATION, FT
500-YR	NA
100-YR	NA

SOURCE: FEMA FLOOD PROFILES
P100-00-00 (GREENS BAYOU) P14P

FEMA MAP NO.: 48201C0460M
THE LIFT STATION IS WITHIN SHADE ZONE AE.

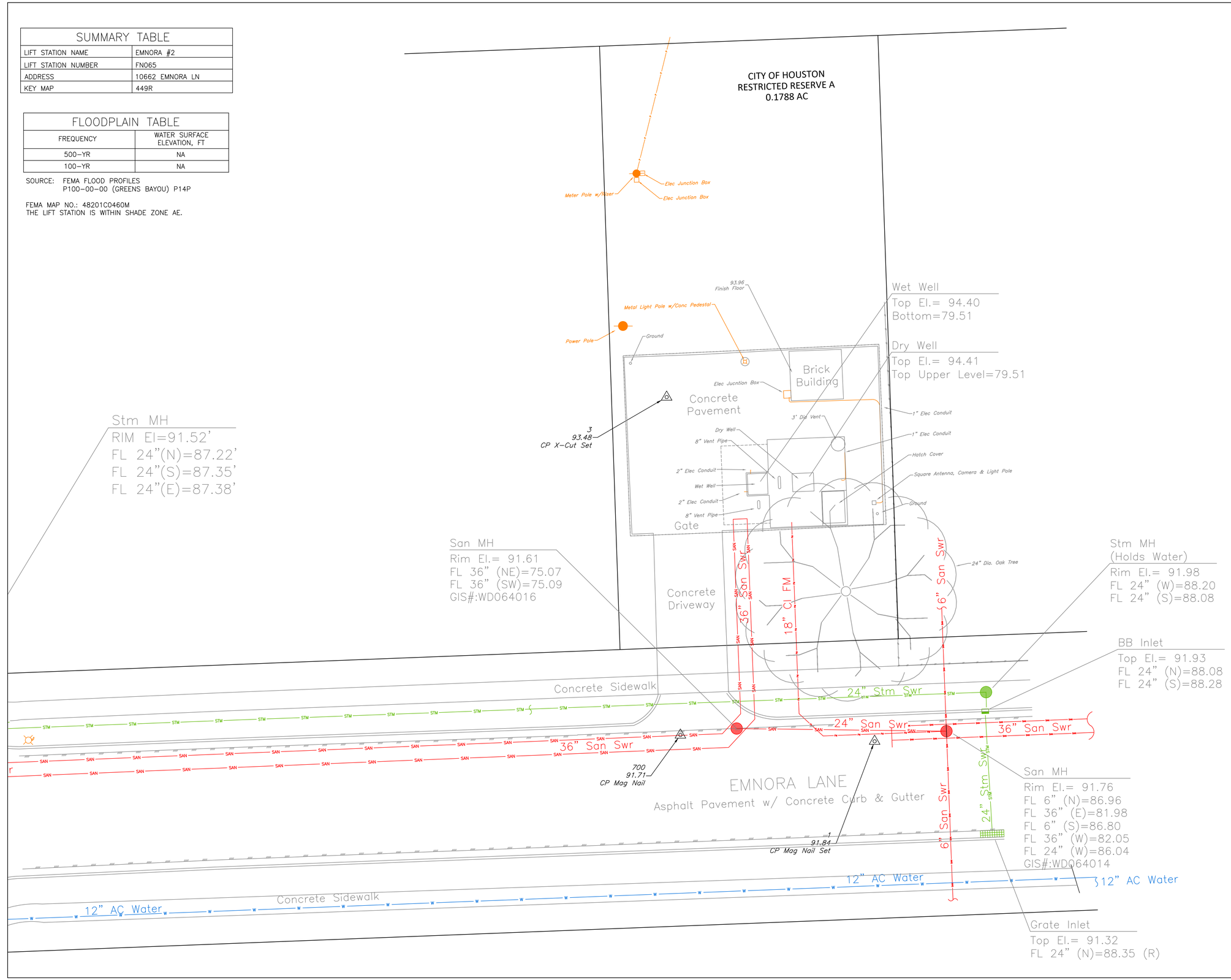

N

0' 5' 10' 20'

SCALE: 1"=10'

BENCHMARK:

STATIC GPS OBSERVATION OF CITY OF HOUSTON MONUMENT 4959-7512 MADE ON 07/30/2024. AN ALUMINUM DISK LOCATED AT THE SOUTHEAST CORNER OF EMNORA LANE AND AGAR LANE.
ELEVATION: 91.48' (NAVD 88 GEOID 18)

NO	DATE	REVISION	APPROVED

NOTICE:
FOR YOUR SAFETY, YOU ARE REQUIRED BY TEXAS LAW TO CALL 811 AT LEAST 48 HOURS BEFORE YOU DIG SO THAT UNDERGROUND LINES CAN BE MARKED. THIS SIGNATURE DOES NOT FULFILL YOUR OBLIGATION TO CALL 811

VERIFICATION OF PRIVATE UTILITY LINES

Mike Brower 03/25/26
Date

CenterPoint Energy natural gas utilities shown. (Gas service lines are not shown). This signature not be used for conflict verification.

Signature valid for six months.

Mike Brower 03/25/26
Date

CenterPoint Energy/UNDERGROUND Electrical Facilities Verification ONLY.
(This signature verifies existing underground facilities – not to be used for conflict verification)

Signature valid for six months.

Chris Primrose 3/25/26
Date

Approved for AT&T underground conduit facilities only.
Signature valid for one year.

EJES INCORPORATED
Corporate Office
12801 North Central Expressway, Suite 700
Dallas, Texas 75243
(P) 214-343-1210
(F) 214-343-3885

Houston Office
6161 Savoy Drive, Suite 830
Houston, Tx. 77036
(P) 281-272-1612
(F) 281-272-1619

EJES, Inc. Copyright © 2017
FIRM REGISTRATION No. 2488

SURVEYED BY: AMANI ENGR.
FB NO. P-6335

STATE OF TEXAS
TANITA GILBERT ALEXANDER
88719
LICENSED PROFESSIONAL ENGINEER
3-20-26
Tanita Gilbert Alexander

CITY OF HOUSTON
HOUSTON PUBLIC WORKS

LIFT STATION REHABILITATION & RECONSTRUCTION CONSENT DECREE

EMNORA #2 LIFT STATION EXISTING SITE PLAN

C-36

WBS NUMBER	FOR CITY OF HOUSTON USE ONLY
R-000267-0175-4	
DRAWING SCALE	
1" = 10'	
CITY OF HOUSTON PM	
NP NAWARAJ PANTA, P.E.	
SHEET NO. 194 OF 312	

NOTES

1. REFER TO LEAD AND ASBESTOS MATERIAL TESTING REPORTS FOR ANY SPECIAL HANDLING AND/OR DISPOSAL REQUIREMENTS.
2. SEE ELECTRICAL & STRUCTURAL DRAWINGS FOR ADDITIONAL DEMO SCOPE OF WORK.

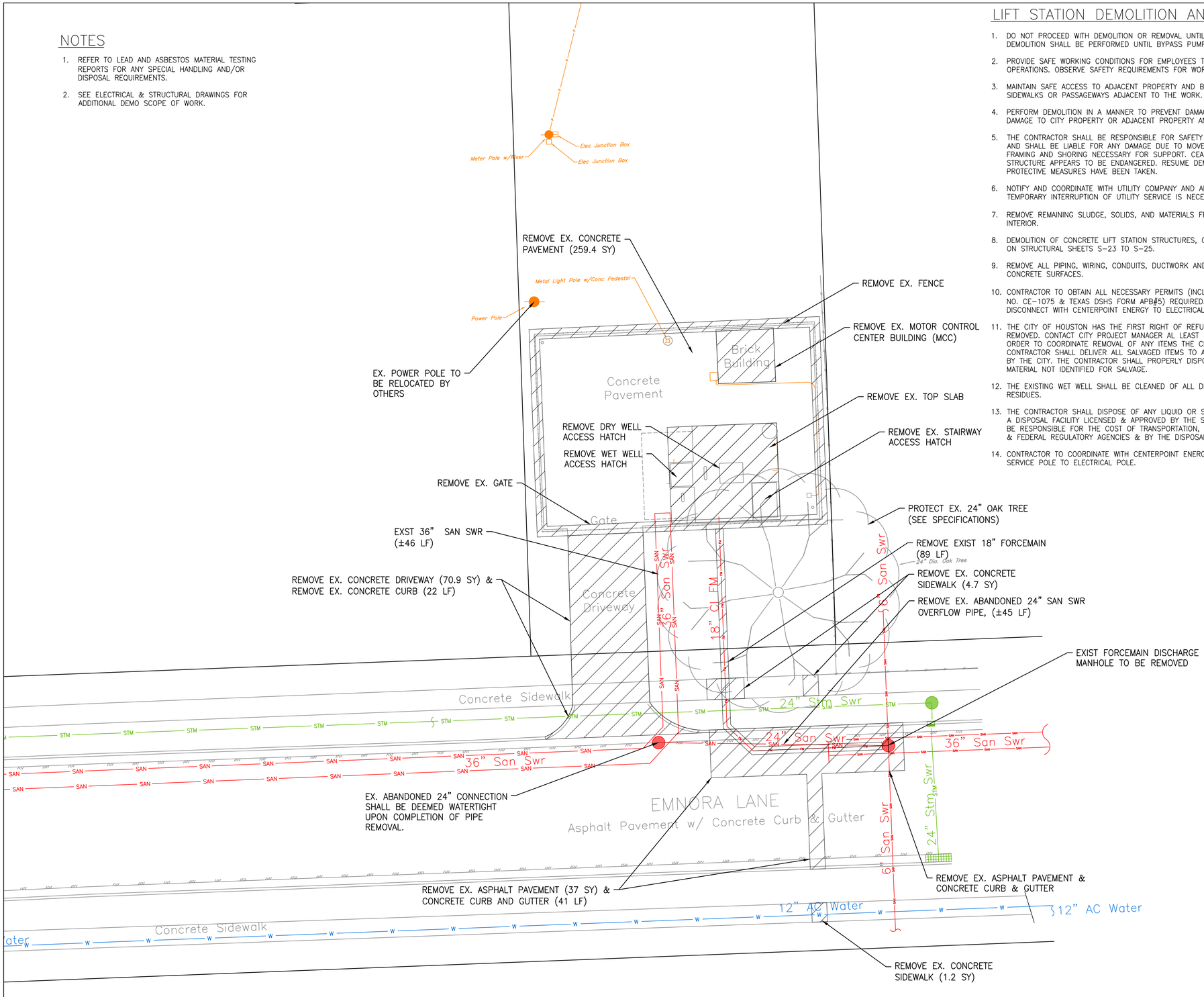

LIFT STATION DEMOLITION AND SALVAGE NOTES

1. DO NOT PROCEED WITH DEMOLITION OR REMOVAL UNTIL AUTHORIZED BY PROJECT MANAGER. NO DEMOLITION SHALL BE PERFORMED UNTIL BYPASS PUMPING IS OPERATIONAL.
2. PROVIDE SAFE WORKING CONDITIONS FOR EMPLOYEES THROUGHOUT DEMOLITION AND REMOVAL OPERATIONS. OBSERVE SAFETY REQUIREMENTS FOR WORK BELOW GRADE.
3. MAINTAIN SAFE ACCESS TO ADJACENT PROPERTY AND BUILDINGS. DO NOT OBSTRUCT ROADWAYS, SIDEWALKS OR PASSAGEWAYS ADJACENT TO THE WORK.
4. PERFORM DEMOLITION IN A MANNER TO PREVENT DAMAGE TO ADJACENT PROPERTY. REPAIR DAMAGE TO CITY PROPERTY OR ADJACENT PROPERTY AND FACILITIES.
5. THE CONTRACTOR SHALL BE RESPONSIBLE FOR SAFETY AND INTEGRITY OF ADJACENT STRUCTURE AND SHALL BE LIABLE FOR ANY DAMAGE DUE TO MOVEMENT OR SETTLEMENT. PROVIDED PROPER FRAMING AND SHORING NECESSARY FOR SUPPORT. CEASE OPERATIONS IF AN ADJACENT STRUCTURE APPEARS TO BE ENDANGERED. RESUME DEMOLITION ONLY AFTER PROPER PROTECTIVE MEASURES HAVE BEEN TAKEN.
6. NOTIFY AND COORDINATE WITH UTILITY COMPANY AND ADJACENT BUILDING OCCUPANTS WHEN TEMPORARY INTERRUPTION OF UTILITY SERVICE IS NECESSARY.
7. REMOVE REMAINING SLUDGE, SOLIDS, AND MATERIALS FROM WET WELL AND RINSE/CLEAN INTERIOR.
8. DEMOLITION OF CONCRETE LIFT STATION STRUCTURES, CONCRETE SLABS AND WALLS AS SHOWN ON STRUCTURAL SHEETS S-23 TO S-25.
9. REMOVE ALL PIPING, WIRING, CONDUITS, DUCTWORK AND OTHER MISCELLANEOUS ITEMS TO CONCRETE SURFACES.
10. CONTRACTOR TO OBTAIN ALL NECESSARY PERMITS (INCLUDING DEMOLISH PERMITS, COH FORM NO. CE-1075 & TEXAS DSHS FORM APB#5) REQUIRED. CONTRACTOR SHALL COORDINATE DISCONNECT WITH CENTERPOINT ENERGY TO ELECTRICAL POWER.
11. THE CITY OF HOUSTON HAS THE FIRST RIGHT OF REFUSAL OF ANY EQUIPMENT OR MATERIAL REMOVED. CONTACT CITY PROJECT MANAGER AL LEAST 72 HOUR PRIOR TO DEMOLITION IN ORDER TO COORDINATE REMOVAL OF ANY ITEMS THE CITY WISHES TO CLAIM AS SALVAGE. THE CONTRACTOR SHALL DELIVER ALL SALVAGED ITEMS TO A LOCATION, WITHIN THE CITY, DETERMINED BY THE CITY. THE CONTRACTOR SHALL PROPERLY DISPOSE OFF ALL OTHER EQUIPMENT AND MATERIAL NOT IDENTIFIED FOR SALVAGE.
12. THE EXISTING WET WELL SHALL BE CLEANED OF ALL DEBRIS, WASTEWATER, AND OTHER RESIDUES.
13. THE CONTRACTOR SHALL DISPOSE OF ANY LIQUID OR SOLID WASTE FOUND IN THE WET WELL AT A DISPOSAL FACILITY LICENSED & APPROVED BY THE STATE OF TEXAS. THE CONTRACTOR SHALL BE RESPONSIBLE FOR THE COST OF TRANSPORTATION, DISPOSAL & TESTING REQUIRED BY STATE & FEDERAL REGULATORY AGENCIES & BY THE DISPOSAL FACILITY.
14. CONTRACTOR TO COORDINATE WITH CENTERPOINT ENERGY ON REMOVAL OF POWER LINES FROM SERVICE POLE TO ELECTRICAL POLE.

N

0' 5' 10' 20'

SCALE: 1"=10'

LEGEND

DEMOLITION / REMOVAL

BENCHMARK:

STATIC GPS OBSERVATION OF CITY OF HOUSTON MONUMENT 4959-7512 MADE ON 07/30/2024. AN ALUMINUM DISK LOCATED AT THE SOUTHEAST CORNER OF EMNORA LANE AND AGAR LANE.
ELEVATION: 91.48' (NAVD 88 GEOID 18)

NO	DATE	REVISION	APPROVED

NOTICE:
FOR YOUR SAFETY, YOU ARE REQUIRED BY TEXAS LAW TO CALL 811 AT LEAST 48 HOURS BEFORE YOU DIG SO THAT UNDERGROUND LINES CAN BE MARKED. THIS SIGNATURE DOES NOT FULFILL YOUR OBLIGATION TO CALL 811

VERIFICATION OF PRIVATE UTILITY LINES

Mike Brower 02/17/26
Date

CenterPoint Energy natural gas utilities shown. (Gas service lines are not shown). This signature not be used for conflict verification.

Signature valid for six months.

Mike Brower 02/17/26
Date

CenterPoint Energy/UNDERGROUND Electrical Facilities Verification ONLY.
(This signature verifies existing underground facilities – not to be used for conflict verification)

Signature valid for six months.

Erina Allison 02/18/2026
Date

Approved for AT&T underground conduit facilities only.
Signature valid for one year.

EJES INCORPORATED
Corporate Office
12801 North Central Expressway, Suite 700
Dallas, Texas 75243
(P) 214-343-1210
(F) 214-343-3885
Houston Office
6161 Savoy Drive, Suite 830
Houston, Tx. 77036
(P) 281-272-1612
(F) 281-272-1619

EJES, Inc. Copyright © 2017
FIRM REGISTRATION No. 2488

SURVEYED BY: AMANI ENGR.
FB NO. P-6335

STATE OF TEXAS
TANITA GILBERT ALEXANDER
88719
LICENSED PROFESSIONAL ENGINEER
2-20-26

CITY OF HOUSTON
HOUSTON PUBLIC WORKS

LIFT STATION REHABILITATION & RECONSTRUCTION CONSENT DECREE

EMNORA #2 LIFT STATION SITE DEMOLITION PLAN

C-37

WBS NUMBER	FOR CITY OF HOUSTON USE ONLY
R-000267-0175-4	
DRAWING SCALE	
1" = 10'	
CITY OF HOUSTON PM	
NP NAWARAJ PANTA, P.E.	
SHEET NO. 195 OF 312	

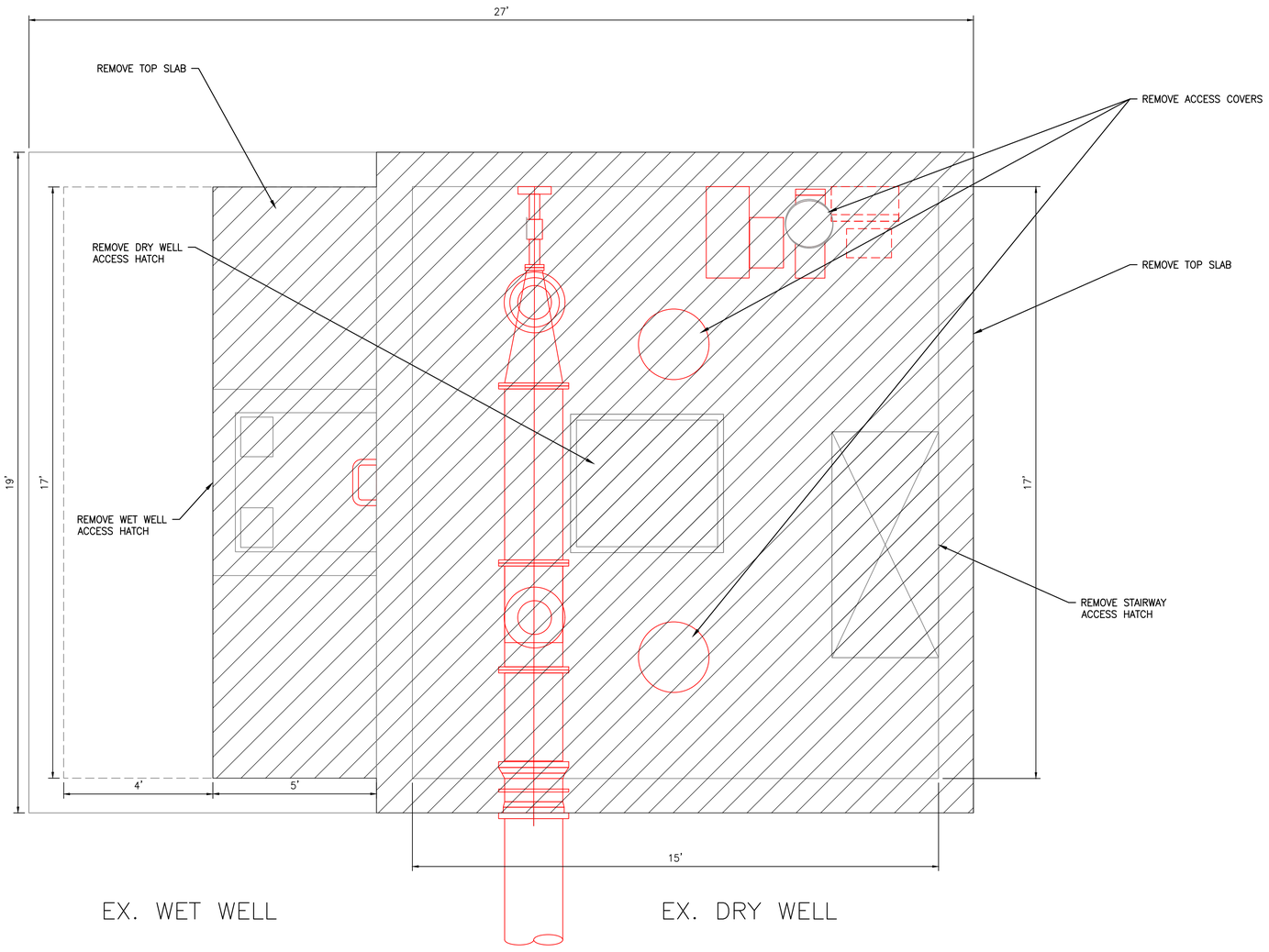

REMOVE ALL AT GRADE ITEMS IDENTIFIED, INCLUDING ALL ABOVE GROUND PIPING, BLOCKING, ACCESS COVERS & MISCELLANEOUS HARDWARE.

NOTES

1. SEE ELECTRICAL & STRUCTURAL DRAWINGS FOR ADDITIONAL DEMO SCOPE OF WORK.

N

SCALE: 1"=2'

LEGEND

DEMOLITION / REMOVAL

LIFT STATION DEMOLITION AND SALVAGE NOTES

1. DO NOT PROCEED WITH DEMOLITION OR REMOVAL UNTIL AUTHORIZED BY PROJECT MANAGER. NO DEMOLITION SHALL BE PERFORMED UNTIL BYPASS PUMPING IS OPERATIONAL.
2. PROVIDE SAFE WORKING CONDITIONS FOR EMPLOYEES THROUGHOUT DEMOLITION AND REMOVAL OPERATIONS. OBSERVE SAFETY REQUIREMENTS FOR WORK BELOW GRADE.
3. MAINTAIN SAFE ACCESS TO ADJACENT PROPERTY AND BUILDINGS. DO NOT OBSTRUCT ROADWAYS, SIDEWALKS OR PASSAGEWAYS ADJACENT TO THE WORK.
4. PERFORM DEMOLITION IN A MANNER TO PREVENT DAMAGE TO ADJACENT PROPERTY. REPAIR DAMAGE TO CITY PROPERTY OR ADJACENT PROPERTY AND FACILITIES.
5. THE CONTRACTOR SHALL BE RESPONSIBLE FOR SAFETY AND INTEGRITY OF ADJACENT STRUCTURE AND SHALL BE LIABLE FOR ANY DAMAGE DUE TO MOVEMENT OR SETTLEMENT. PROVIDED PROPER FRAMING AND SHORING NECESSARY FOR SUPPORT. CEASE OPERATIONS IF AN ADJACENT STRUCTURE APPEARS TO BE ENDANGERED. RESUME DEMOLITION ONLY AFTER PROPER PROTECTIVE MEASURES HAVE BEEN TAKEN.
6. NOTIFY AND COORDINATE WITH UTILITY COMPANY AND ADJACENT BUILDING OCCUPANTS WHEN TEMPORARY INTERRUPTION OF UTILITY SERVICE IS NECESSARY.
7. REMOVE REMAINING SLUDGE, SOLIDS, AND MATERIALS FROM WET WELL AND RINSE/CLEAN INTERIOR.
8. DEMOLITION OF CONCRETE LIFT STATION STRUCTURES, CONCRETE SLABS, AND WALLS AS SHOWN ON STRUCTURAL SHEETS S-23 TO S-25.
9. REMOVE ALL PIPING, WIRING, CONDUITS, DUCTWORK AND OTHER MISCELLANEOUS ITEMS TO CONCRETE SURFACES.
10. CONTRACTOR TO OBTAIN ALL NECESSARY PERMITS (INCLUDING DEMOLISH PERMITS, COH FORM NO. CE-1075 & TEXAS DSHS FORM APB#5) REQUIRED. CONTRACTOR SHALL COORDINATE DISCONNECT WITH CENTERPOINT ENERGY TO ELECTRICAL POWER.
11. THE CITY OF HOUSTON HAS THE FIRST RIGHT OF REFUSAL OF ANY EQUIPMENT OR MATERIAL REMOVED. CONTACT CITY PROJECT MANAGER AL LEAST 72 HOUR PRIOR TO DEMOLITION IN ORDER TO COORDINATE REMOVAL OF ANY ITEMS THE CITY WISHES TO CLAIM AS SALVAGE. THE CONTRACTOR SHALL DELIVER ALL SALVAGED ITEMS TO A LOCATION, WITHIN THE CITY, DETERMINED BY THE CITY. THE CONTRACTOR SHALL PROPERLY DISPOSE OFF ALL OTHER EQUIPMENT AND MATERIAL NOT IDENTIFIED FOR SALVAGE.
12. THE EXISTING WET WELL SHALL BE CLEANED OF ALL DEBRIS, WASTEWATER, AND OTHER RESIDUES.
13. THE CONTRACTOR SHALL DISPOSE OF ANY LIQUID OR SOLID WASTE FOUND IN THE WET WELL AT A DISPOSAL FACILITY LICENSED & APPROVED BY THE STATE OF TEXAS. THE CONTRACTOR SHALL BE RESPONSIBLE FOR THE COST OF TRANSPORTATION, DISPOSAL & TESTING REQUIRED BY STATE & FEDERAL REGULATORY AGENCIES & BY THE DISPOSAL FACILITY.
14. CONTRACTOR TO COORDINATE WITH CENTERPOINT ENERGY ON REMOVAL OF POWER LINES FROM SERVICE POLE TO ELECTRICAL POLE.

NO	DATE	REVISION	APPROVED

NOTICE:
FOR YOUR SAFETY, YOU ARE REQUIRED BY TEXAS LAW TO CALL 811 AT LEAST 48 HOURS BEFORE YOU DIG SO THAT UNDERGROUND LINES CAN BE MARKED. THIS SIGNATURE DOES NOT FULFILL YOUR OBLIGATION TO CALL 811

VERIFICATION OF PRIVATE UTILITY LINES

Mike Brower 02/17/26
Date

CenterPoint Energy natural gas utilities shown. (Gas service lines are not shown). This signature not be used for conflict verification.

Signature valid for six months.

Mike Brower 02/17/26
Date

CenterPoint Energy/UNDERGROUND Electrical Facilities Verification ONLY.
(This signature verifies existing underground facilities – not to be used for conflict verification)

Signature valid for six months.

Carina Allison 02/18/2026
Date

Approved for AT&T underground conduit facilities only.
Signature valid for one year.

EJES INCORPORATED
Corporate Office
12801 North Central Expressway, Suite 700
Dallas, Texas 75243
(P) 214-343-1210
(F) 214-343-3885
Houston Office
6161 Savoy Drive, Suite 830
Houston, Tx. 77036
(P) 281-272-1612
(F) 281-272-1619
EJES, Inc. Copyright © 2017
FIRM REGISTRATION No. 2488

SURVEYED BY: AMANI ENGR.
FB NO. P-6335

STATE OF TEXAS
TANITA GILBERT ALEXANDER
88719
LICENSED PROFESSIONAL ENGINEER
2-20-26

CITY OF HOUSTON
HOUSTON PUBLIC WORKS

LIFT STATION REHABILITATION & RECONSTRUCTION CONSENT DECREE

EMNORA #2 LIFT STATION DEMOLITION PLAN AT GRADE

C-38

WBS NUMBER	FOR CITY OF HOUSTON USE ONLY
R-000267-0175-4	
DRAWING SCALE	
1"=2'	
CITY OF HOUSTON PM	
NP NAWARAJ PANTA, P.E.	
SHEET NO. 196 OF 312	

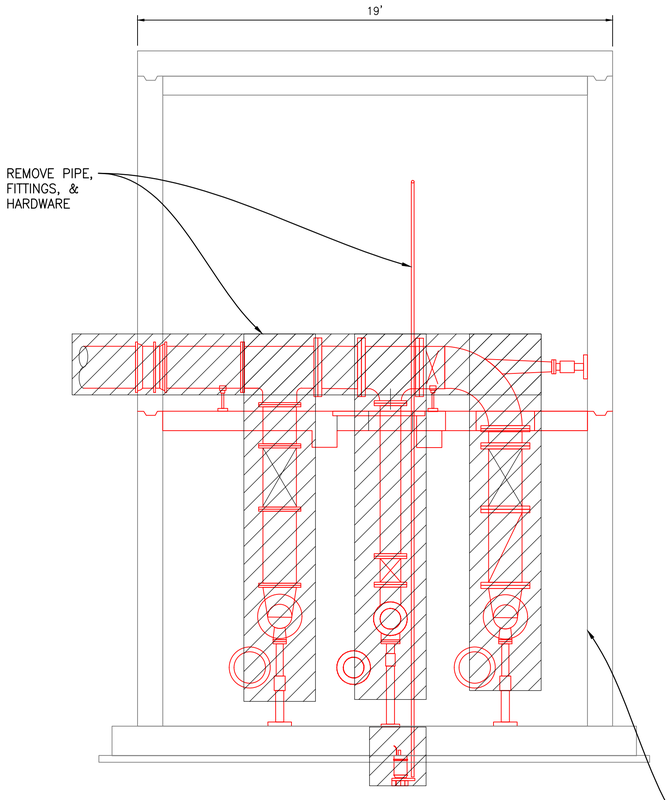

DEMOLITION - BELOW GRADE

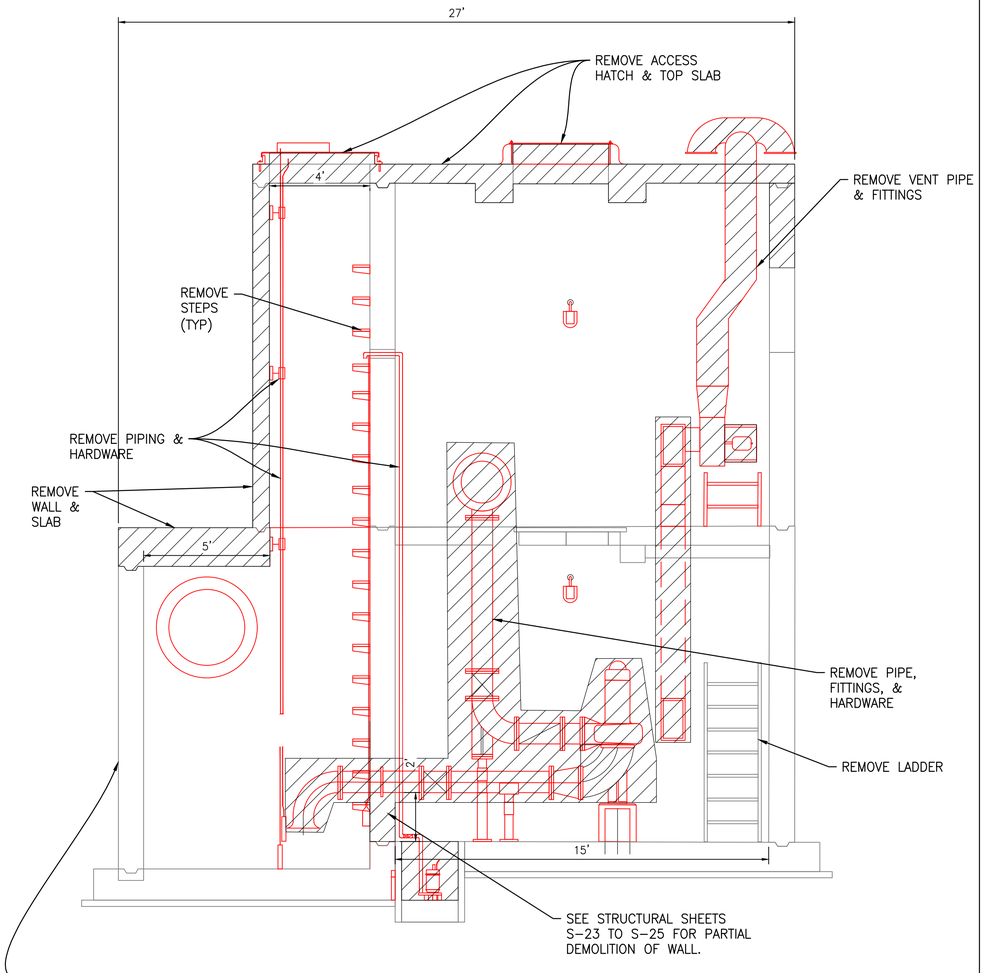

DEMOLITION - BELOW GRADE

NOTES

1. SEE ELECTRICAL & STRUCTURAL DRAWINGS FOR ADDITIONAL DEMO SCOPE OF WORK.

LIFT STATION DEMOLITION AND SALVAGE NOTES

1. DO NOT PROCEED WITH DEMOLITION OR REMOVAL UNTIL AUTHORIZED BY PROJECT MANAGER. NO DEMOLITION SHALL BE PERFORMED UNTIL BYPASS PUMPING IS OPERATIONAL.
2. PROVIDE SAFE WORKING CONDITIONS FOR EMPLOYEES THROUGHOUT DEMOLITION AND REMOVAL OPERATIONS. OBSERVE SAFETY REQUIREMENTS FOR WORK BELOW GRADE.
3. MAINTAIN SAFE ACCESS TO ADJACENT PROPERTY AND BUILDINGS. DO NOT OBSTRUCT ROADWAYS, SIDEWALKS OR PASSAGEWAYS ADJACENT TO THE WORK.
4. PERFORM DEMOLITION IN A MANNER TO PREVENT DAMAGE TO ADJACENT PROPERTY. REPAIR DAMAGE TO CITY PROPERTY OR ADJACENT PROPERTY AND FACILITIES.
5. THE CONTRACTOR SHALL BE RESPONSIBLE FOR SAFETY AND INTEGRITY OF ADJACENT STRUCTURE AND SHALL BE LIABLE FOR ANY DAMAGE DUE TO MOVEMENT OR SETTLEMENT. PROVIDED PROPER FRAMING AND SHORING NECESSARY FOR SUPPORT. CEASE OPERATIONS IF AN ADJACENT STRUCTURE APPEARS TO BE ENDANGERED. RESUME DEMOLITION ONLY AFTER PROPER PROTECTIVE MEASURES HAVE BEEN TAKEN.
6. NOTIFY AND COORDINATE WITH UTILITY COMPANY AND ADJACENT BUILDING OCCUPANTS WHEN TEMPORARY INTERRUPTION OF UTILITY SERVICE IS NECESSARY.
7. REMOVE REMAINING SLUDGE, SOLIDS, AND MATERIALS FROM WET WELL AND RINSE/CLEAN INTERIOR.
8. DEMOLITION OF CONCRETE LIFT STATION STRUCTURES, CONCRETE SLABS, AND WALLS AS SHOWN ON STRUCTURAL SHEETS S-23 TO S-25.
9. REMOVE ALL PIPING, WIRING, CONDUITS, DUCTWORK AND OTHER MISCELLANEOUS ITEMS TO CONCRETE SURFACES.
10. CONTRACTOR TO OBTAIN ALL NECESSARY PERMITS (INCLUDING DEMOLISH PERMITS, COH FORM NO. CE-1075 & TEXAS DSHS FORM APB#5) REQUIRED. CONTRACTOR SHALL COORDINATE DISCONNECT WITH CENTERPOINT ENERGY TO ELECTRICAL POWER.
11. THE CITY OF HOUSTON HAS THE FIRST RIGHT OF REFUSAL OF ANY EQUIPMENT OR MATERIAL REMOVED. CONTACT CITY PROJECT MANAGER AL LEAST 72 HOUR PRIOR TO DEMOLITION IN ORDER TO COORDINATE REMOVAL OF ANY ITEMS THE CITY WISHES TO CLAIM AS SALVAGE. THE CONTRACTOR SHALL DELIVER ALL SALVAGED ITEMS TO A LOCATION, WITHIN THE CITY, DETERMINED BY THE CITY. THE CONTRACTOR SHALL PROPERLY DISPOSE OFF ALL OTHER EQUIPMENT AND MATERIAL NOT IDENTIFIED FOR SALVAGE.
12. THE EXISTING WET WELL SHALL BE CLEANED OF ALL DEBRIS, WASTEWATER, AND OTHER RESIDUES.
13. THE CONTRACTOR SHALL DISPOSE OF ANY LIQUID OR SOLID WASTE FOUND IN THE WET WELL AT A DISPOSAL FACILITY LICENSED & APPROVED BY THE STATE OF TEXAS. THE CONTRACTOR SHALL BE RESPONSIBLE FOR THE COST OF TRANSPORTATION, DISPOSAL & TESTING REQUIRED BY STATE & FEDERAL REGULATORY AGENCIES & BY THE DISPOSAL FACILITY.
14. CONTRACTOR TO COORDINATE WITH CENTERPOINT ENERGY ON REMOVAL OF POWER LINES FROM SERVICE POLE TO ELECTRICAL POLE.

LEGEND

DEMOLITION / REMOVAL

NO	DATE	REVISION	APPROVED

NOTICE:
FOR YOUR SAFETY, YOU ARE REQUIRED BY TEXAS LAW TO CALL 811 AT LEAST 48 HOURS BEFORE YOU DIG SO THAT UNDERGROUND LINES CAN BE MARKED. THIS SIGNATURE DOES NOT FULFILL YOUR OBLIGATION TO CALL 811

VERIFICATION OF PRIVATE UTILITY LINES

Mike Brower — 02/17/26
Date

CenterPoint Energy natural gas utilities shown. (Gas service lines are not shown). This signature not be used for conflict verification.

Signature valid for six months.

Mike Brower — 02/17/26
Date

CenterPoint Energy/UNDERGROUND Electrical Facilities Verification ONLY.
(This signature verifies existing underground facilities – not to be used for conflict verification)

Signature valid for six months.

Tavina Allison — 02/18/2026
Date

Approved for AT&T underground conduit facilities only.
Signature valid for one year.

EJES INCORPORATED
Corporate Office
12801 North Central Expressway, Suite 700
Dallas, Texas 75243
(P) 214-343-1210
(F) 214-343-3885
Houston Office
6161 Savoy Drive, Suite 830
Houston, Tx. 77036
(P) 281-272-1612
(F) 281-272-1619
EJES, Inc. Copyright © 2017
FIRM REGISTRATION No. 2488

SURVEYED BY: AMANI ENGR.
FB NO. P-6335

STATE OF TEXAS
TANITA GILBERT ALEXANDER
88719
LICENSED
PROFESSIONAL ENGINEER
2-20-26

CITY OF HOUSTON
HOUSTON PUBLIC WORKS

LIFT STATION REHABILITATION & RECONSTRUCTION CONSENT DECREE

EMNORA #2 LIFT STATION DEMOLITION PIPING PLAN

C-39

WBS NUMBER	FOR CITY OF HOUSTON USE ONLY
R-000267-0175-4	
DRAWING SCALE	
1" = 3'	
CITY OF HOUSTON PM	
NP NAWARAJ PANTA, P.E.	
SHEET NO. 197 OF 312	

NOTE TO OWNER:

1.DETENTION POND MUST DRAIN WITHIN 24 HOURS AFTER A STORM EVENT.
2.OWNER IS RESPONSIBLE FOR DETENTION POND MAINTENANCE.

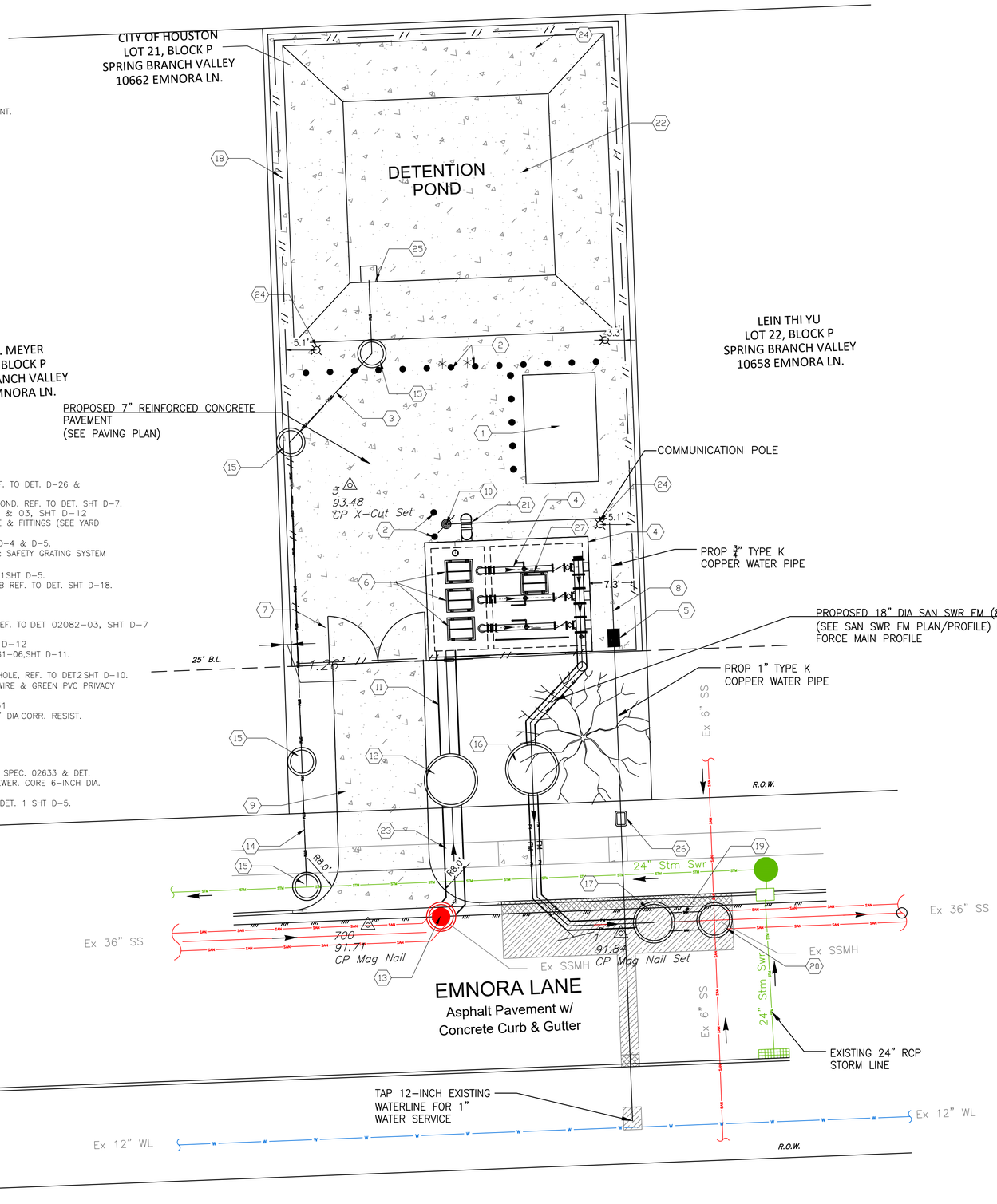

KEYNOTES:

1. 12-FT X 18-FT PRECAST CONTROL BUILDING W/NEW MCC, REF. TO DET. D-26 & D-28.
2. 18 BOLLARDS AND 2 REMOVABLE BOLLARDS FOR ACCESS TO POND. REF. TO DET. SHT D-7.
3. 84 LF 24-INCH STORM DRAIN LINE, REF. TO DET. 02317-02 & 03, SHT D-12
4. PROPOSED NEW TOP SLAB W/ABOVE GROUND PUMP DISCHARGE & FITTINGS (SEE YARD PIPING PLAN)
5. PROPOSED BACKFLOW PREVENTER. REF. TO. DET. 2 & 3 SHT D-4 & D-5.
6. PROPOSED NEW TOP SLAB W/WATERPROOF ACCESS HATCHES & SAFETY GRATING SYSTEM
7. 16' DBL SWING GATE, REF. TO DET. SHT D-3
8. 128 LF ¾" TYPE K COPPER WATER SERVICE LINE, REF. TO DET.1 SHT D-5.
9. 70.9 SY CONCRETE DRIVE, 15' WIDE, & 22 LF CONCRETE CURB REF. TO DET. SHT D-18. 7" THICKNESS, REMOVE & REPLACE EX. DRIVEWAY.
10. NON-FREEZE HOSE BIB, REF. TO DET.3 SHT D-5.
11. 18 LF OF 36-INCH REHAB BY CIPP
12. PROPOSED 8' DIA INFLUENT CORR. RESIST.GRAVITY MANHOLE, REF. TO DET 02082-03, SHT D-7
13. EX. SSMH IS TO REMAIN
14. 21 LF 24-INCH RCP, REF. TO DET. 02317-02 & 03, SHT D-12
15. PROPOSED 4' DIAM STORM SEWER MANHOLE, REF. TO DET 02081-06,SHT D-11.
16. PROPOSED 8' DIA BYPASS MANHOLE, REF. TO DET.2 SHT D-10.
17. PROPOSED 6' DIA CORR. RESIST.FORCE MAIN DISCHARGE MANHOLE, REF. TO DET.2 SHT D-10.
18. PROPOSED 6' HIGH CHAIN LINK FENCE W/3-STRAND BARBED WIRE & GREEN PVC PRIVACY SLATS, REF. TO DET 17, SHT D-3
19. 10 LF 36" SAN SWR PIPE @ 0.10% PER C.O.H. SPEC 02531
20. REMOVE EX. FORCE MAIN DISCHARGE MH & REPLACE W/STD 5' DIA CORR. RESIST. SAN SWR MH (DROP), REF. TO DET. 02082-03, SHT D-7.
21. 20-INCH WET WELL VENT, REF. TO DET.1 SHT D-19.
22. CONCRETE DETENTION POND PER DETAIL SHT. D-36.
23. 17 LF OF 36-INCH SAN SWR PIPE REHAB BY CIPP
24. PROPOSED YARD LIGHTING, REF TO SHT E-50
25. STORM SEWER JUNCTION BOX WITH GRATE TOP, REF TO C.O.H. SPEC. 02633 & DET. 02081-06, SHT D-11. CONNECT TO PROPOSED 24" STORM SEWER. CORE 6-INCH DIA. RESTRICTOR HOLE IN BOX AT ELEV. 89.80'.
26. PROP. WATER METER WITH TYPE K COPPER PIPING. REFER TO DET. 1 SHT D-5.
27. PROP. NEW TOP SLAB DRY WELL ACCESS HATCH REFER TO DET. 1 SHT D-6

NOTE:

1. PROVIDE PROTECTIVE COATING ON ALL INTERIOR CONCRETE SURFACE OF THE WET WELL. REFER TO COH PROTECTIVE COATINGS SPEC. 09901, SYSTEM 108.

* REMOVABLE BOLLARDS (2 EA.)

N

0' 5' 10' 20'

SCALE: 1"=10'

LEGEND

- PROPOSED CONCRETE PAVEMENT
- PROPOSED CONCRETE CURB & GUTTER
- PROPOSED ASPHALT PAVEMENT

NO	DATE	REVISION	APPROVED

NOTICE:
FOR YOUR SAFETY, YOU ARE REQUIRED BY TEXAS LAW TO CALL 811 AT LEAST 48 HOURS BEFORE YOU DIG SO THAT UNDERGROUND LINES CAN BE MARKED. THIS SIGNATURE DOES NOT FULFILL YOUR OBLIGATION TO CALL 811

VERIFICATION OF PRIVATE UTILITY LINES

Mike Brower 04/10/26
Date

CenterPoint Energy natural gas utilities shown. (Gas service lines are not shown). This signature not be used for conflict verification.

Signature valid for six months.

Mike Brower 04/10/26
Date

CenterPoint Energy/UNDERGROUND Electrical Facilities Verification ONLY.
(This signature verifies existing underground facilities – not to be used for conflict verification)

Signature valid for six months.

Chris Primrose 4/16/26
Date

Approved for AT&T underground conduit facilities only.
Signature valid for one year.

EJES INCORPORATED
Corporate Office
12801 North Central Expressway, Suite 700
Dallas, Texas 75243
(P) 214-343-1210
(F) 214-343-3885

Houston Office
6161 Savoy Drive, Suite 830
Houston, Tx. 77036
(P) 281-272-1612
(F) 281-272-1619

EJES, Inc. Copyright © 2017
FIRM REGISTRATION No. 2488

SURVEYED BY: AMANI ENGR.
FB NO. P-6335

STATE OF TEXAS
TANITA GILBERT ALEXANDER
88719
LICENSED PROFESSIONAL ENGINEER
4-8-26
Tanita Gilbert Alexander

CITY OF HOUSTON
HOUSTON PUBLIC WORKS

LIFT STATION REHABILITATION & RECONSTRUCTION CONSENT DECREE

EMNORA #2 LIFT STATION SITE PLAN

C-40

WBS NUMBER	FOR CITY OF HOUSTON USE ONLY
R-000267-0175-4	
DRAWING SCALE	
1"=10'	
CITY OF HOUSTON PM	
NP NAWARAJ PANTA, P.E.	
SHEET NO. 198 OF 312	

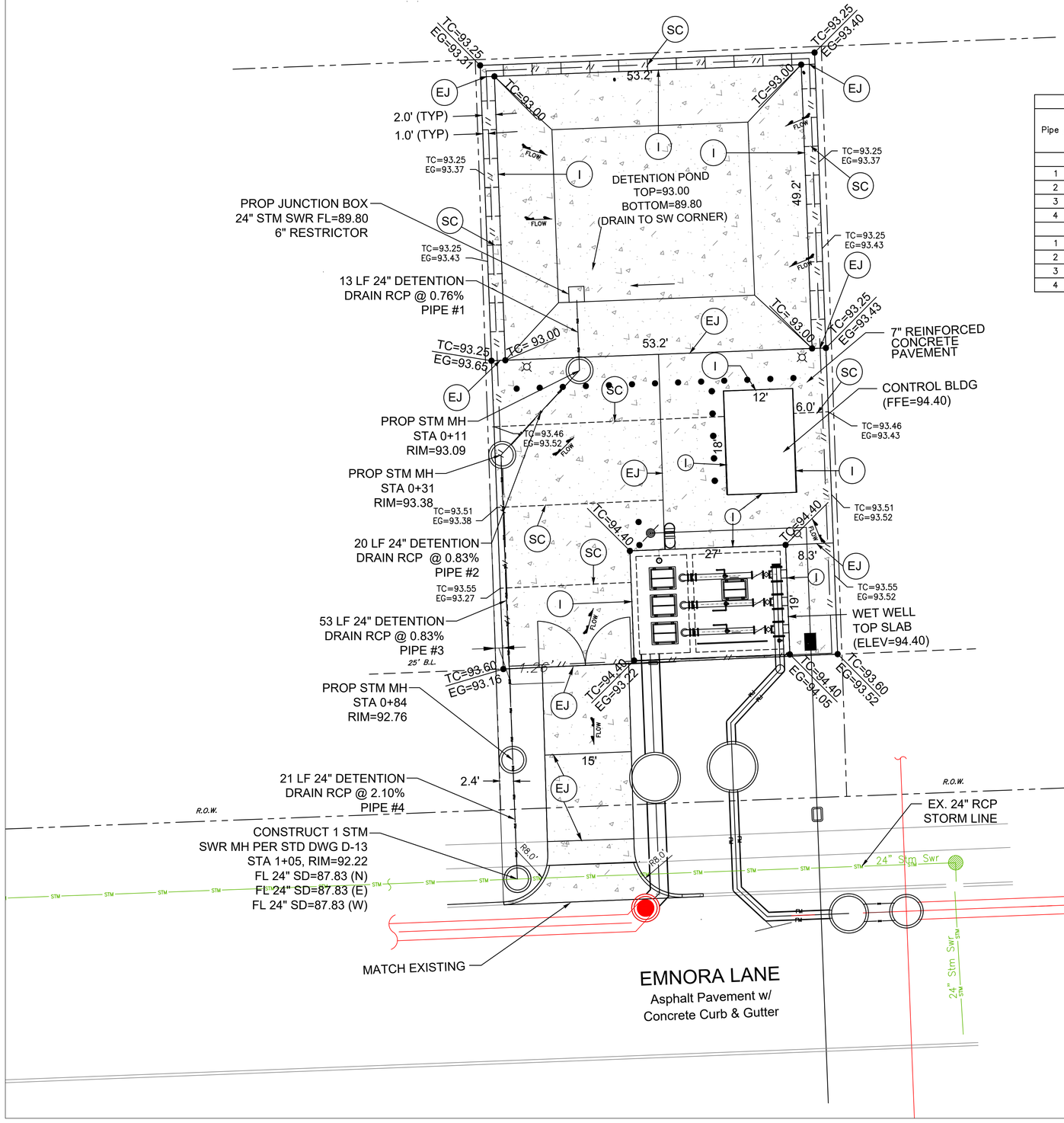

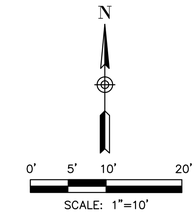

EMNORA STORM SEWER CALCS.															
Pipe #	Upper Elevation	Lower Elevation	Length (ft)	Slope (ft/ft)	Design Flow (cfs)	Diameter D (ft)	Flow Depth d (ft)	Depth to Pipe Diameter Ratio (d/D)	Flow Area A (sf)	Wetted Perimeter P (ft)	Hydraulic Radius Rh (ft)	Full Flow Velocty v (fps)	Travel Time T (min)	Calculated Flow Rate Qcalc (cfs)	Observed/Design Flow Rate Qdes (cfs)
2-YR															
1	89.80	89.70	13	0.0076	0.38	2	0.19	0.095	0.15	1.25	0.12	6.26	0.03	0.95	0.38
2	89.70	89.53	20	0.0083	0.38	2	0.19	0.095	0.15	1.25	0.12	6.55	0.05	0.99	0.38
3	89.53	89.10	53	0.0083	0.38	2	0.19	0.095	0.15	1.25	0.12	6.55	0.13	0.99	0.38
4	88.24	87.81	21	0.021	0.38	2	0.16	0.08	0.12	1.15	0.10	10.41	0.03	1.23	0.38
100-YR															
1	89.80	89.70	13	0.0076	0.87	2	0.29	0.145	0.28	1.56	0.18	6.26	0.03	1.76	0.87
2	89.70	89.53	20	0.0083	0.87	2	0.29	0.145	0.28	1.56	0.18	6.55	0.05	1.84	0.87
3	89.53	89.10	53	0.0083	0.87	2	0.29	0.145	0.28	1.56	0.18	6.55	0.13	1.84	0.87
4	88.24	87.81	21	0.021	0.87	2	0.23	0.115	0.20	1.38	0.14	10.41	0.03	2.09	0.87

NOTES

1. SEE STANDARD DRAWINGS FOR JOINT DETAILS, SHT D-15.
2. MATCH DRIVEWAY T.O.C. ELEVATION TO EXISTING STREET PAVEMENT
3. TAPER CURB TO MATCH EXISTING PAVEMENT
4. 7" THICK REINFORCED CONCRETE PAVEMENT WITH 6" THICK 6% LIME STABILIZED SUBGRADE OR 100 PSI CEMENT STABILIZED SAND PER SHT D-14, SPEC. 02321. COH DRAWING NO. 02751-01 & SPEC. 02336. SLOPE ALL PAVEMENT TO DETENTION POND. DRIVEWAY SHALL BE 7" THICK. SEE DETAIL SHT D-18.
5. PURSUANT TO FAA ADVISORY CIRCULAR 150/5200-33B 2-3 SUB-SECTION B: "STORM WATER DETENTION PONDS & SWALES SHOULD BE DESIGNED, ENGINEERED, CONSTRUCTED AND MAINTAINED FOR A MAXIMUM 48-HOUR DETENTION PERIOD AFTER THE DESIGN STORM EVENT & REMAIN COMPLETELY DRY BETWEEN EVENTS
6. PROPERTY OWNER WILL BE RESPONSIBLE FOR MAINTENANCE OF THE DETENTION FACILITY
7. MANHOLES LOCATED IN VEHICULAR TRAVELWAYS SHALL HAVE COVERS RATED FOR HS-20 LOADING.
8. DRIVEWAY RADII SHALL BE 8'.
9. EARTHWORK QUANTITIES: CUT= 315.4 CY; FILL= 39.27 CY

LEGEND

- (SC) SAW CUT WITH SEALANT
- (I) ISOLATION JOINT
- (EJ) DOWEL EXPANSION JOINT
- (L) SPECIAL JOINT
- TP=00.00 • TOP OF PAVEMENT ELEV
- ➔ DIRECTION OF RUNOFF

NO	DATE	REVISION	APPROVED

NOTICE:
FOR YOUR SAFETY, YOU ARE REQUIRED BY TEXAS LAW TO CALL 811 AT LEAST 48 HOURS BEFORE YOU DIG SO THAT UNDERGROUND LINES CAN BE MARKED. THIS SIGNATURE DOES NOT FULFILL YOUR OBLIGATION TO CALL 811

VERIFICATION OF PRIVATE UTILITY LINES

Mike Brower 04/10/26
Date

CenterPoint Energy natural gas utilities shown. (Gas service lines are not shown). This signature not be used for conflict verification.

Signature valid for six months.

Mike Brower 04/10/26
Date

CenterPoint Energy/UNDERGROUND Electrical Facilities Verification ONLY.
(This signature verifies existing underground facilities – not to be used for conflict verification)

Signature valid for six months.

Chris Primrose 4/16/26
Date

Approved for AT&T underground conduit facilities only.
Signature valid for one year.

EJES
INCORPORATED
Corporate Office
12801 North Central Expressway, Suite 700
Dallas, Texas 75243
(P) 214-343-3210
(F) 214-343-3885
Houston Office
6161 Savoy Drive, Suite 830
Houston, Tx. 77036
(P) 281-272-1612
(F) 281-272-1619
EJES, Inc. Copyright © 2017
FIRM REGISTRATION No. 2488

SURVEYED BY: AMANI ENGR.
FB NO. P-6335

STATE OF TEXAS
TANITA GILBERT ALEXANDER
88719
LICENSED
PROFESSIONAL ENGINEER
4-8-26

CITY OF HOUSTON
HOUSTON PUBLIC WORKS

LIFT STATION REHABILITATION & RECONSTRUCTION
CONSENT DECREE

EMNORA #2 LIFT STATION CIVIL CONCRETE PAVEMENT & DRAINAGE PLAN
C-41

WBS NUMBER	FOR CITY OF HOUSTON USE ONLY
R-000267-0175-4	
DRAWING SCALE	
1" = 10"	
CITY OF HOUSTON PM	
NAVARAJ PANTA, P.E.	
SHEET NO. 199 OF 312	

	Total Drainage Area
2-yr, 24-h Event, (IDM 9.2.01.B.1.a.2), i=	3.98 in/hr
100-yr, 24-h Event, (IDM 9.2.01.B.1.a.2), i=	9.01 in/hr
Surface Area, A=	0.31 Acre
Proposed Impervious Area (Inc. Driveway), A=	0.31 Acre
Imp. Surface Coeficient (IDM 9.2.01.B.3.a.1), C=	0.31
$Q_{2yr} = C \times I \times A$	0.38 ft^3/s
$Q_{100yr} = C \times I \times A$	0.87 ft^3/s

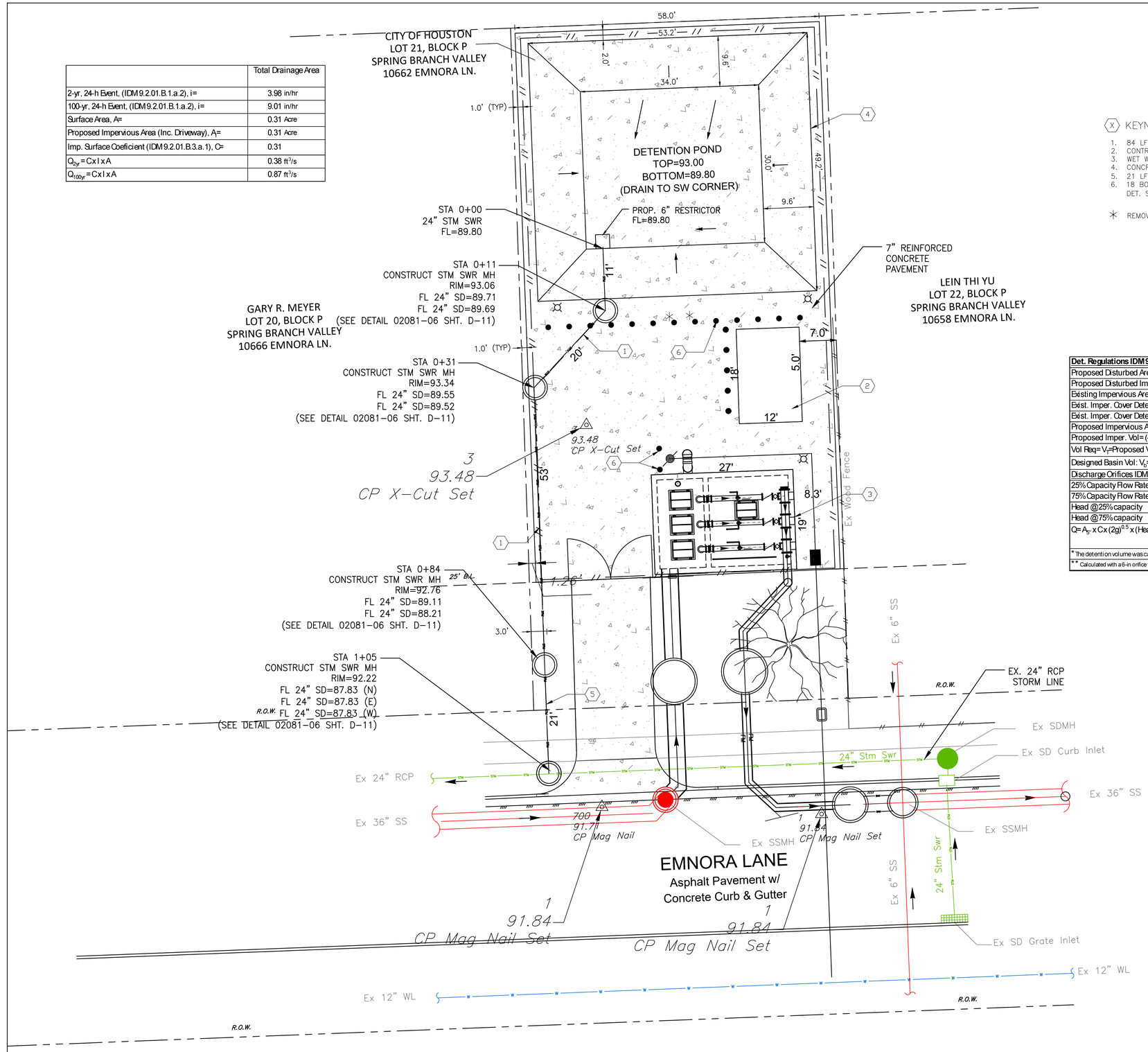

0' 5' 10' 20'

SCALE: 1"=10'

N

KEYNOTES:

1. 84 LF DETENTION POND 24" DRAIN LINE @ 2.1%
2. CONTROL BUILDING
3. WET WELL TOP SLAB
4. CONCRETE LINED DETENTION POND. REF TO DET. SHT D-36
5. 21 LF 24" RCP STORM SEWER
6. 18 BOLLARDS AND 2 REMOVABLE BOLLARDS FOR ACCESS TO POND. REF. TO DET. SHT D-7. PLACE BOLLARDS @ 4.0' C-C.

✳ REMOVABLE BOLLARDS (2 EA.)

Det. Regulations IDM 9.2.01.H.3.e		
Proposed Disturbed Area	0.15	Acre
Proposed Disturbed Impervious Area	0.15	Acre
Existing Impervious Area	0.15	Acre
Exist. Imper. Cover Detention Credit Rate	0.07	Acre-ft/Acre
Exist. Imper. Cover Detention Credit Volume	457	Acre-ft
Proposed Impervious Area Detention Rate	0.8	Acre-ft/Acre
Proposed Imper. Vol= (43,560 x (0.8xA*)	5,227	ft^3
Vol Req= V_r=Proposed Vol-Credit Vol	**4,770**	ft^3
Designed Basin Vol: V_d=	**5,527**	ft^3
Discharge Orifices IDM 9.2.01.H.4.b:		
25% Capacity Flow Rate per IDM 9.2.01.H.4.b.1.(a)	0.08	ft^3/s
75% Capacity Flow Rate per IDM 9.2.01.H.4.b.1.(a)	0.30	ft^3/s
Head @25% capacity	0.58	ft
Head @75% capacity	2.10	ft
$Q = A_o \times C \times (2g)^{0.5} \times (Head)^{0.5}$ (at 25% detention capacity)*	0.72	ft^3/s

* The detention volume was calculated base on the proposed disturbed impervious area.
** Calculated with a 6-in orifice to meet COH criteria

NO	DATE	REVISION	APPROVED

NOTICE:
FOR YOUR SAFETY, YOU ARE REQUIRED BY TEXAS LAW TO CALL 811 AT LEAST 48 HOURS BEFORE YOU DIG SO THAT UNDERGROUND LINES CAN BE MARKED. THIS SIGNATURE DOES NOT FULFILL YOUR OBLIGATION TO CALL 811

VERIFICATION OF PRIVATE UTILITY LINES

Mike Brower — 04/10/26
Date

CenterPoint Energy natural gas utilities shown. (Gas service lines are not shown). This signature not be used for conflict verification.

Signature valid for six months.

Mike Brower — 04/10/26
Date

CenterPoint Energy/UNDERGROUND Electrical Facilities Verification ONLY.
(This signature verifies existing underground facilities – not to be used for conflict verification)

Signature valid for six months.

Chris Primrose — 4/16/26
Date

Approved for AT&T underground conduit facilities only.
Signature valid for one year.

EJES INCORPORATED
Corporate Office
12801 North Central Expressway, Suite 700
Dallas, Texas 75243
(P) 214-343-1210
(F) 214-343-3885

Houston Office
6161 Savoy Drive, Suite 830
Houston, Tx. 77036
(P) 281-272-1612
(F) 281-272-1619

EJES, Inc. Copyright © 2017

FIRM REGISTRATION No. 2488

SURVEYED BY: AMANI ENGR.
FB NO. P-6335

STATE OF TEXAS
TANITA GILBERT ALEXANDER
88719
LICENSED
PROFESSIONAL ENGINEER
4-8-26

CITY OF HOUSTON
HOUSTON PUBLIC WORKS

LIFT STATION REHABILITATION & RECONSTRUCTION
CONSENT DECREE

EMNORA #2 LIFT STATION
SITE DETENTION PLAN

C-42

WBS NUMBER	FOR CITY OF HOUSTON USE ONLY
R-000267-0175-4	
DRAWING SCALE	
1"=10'	
CITY OF HOUSTON PM	
NP NAWARAJ PANTA, P.E.	
SHEET NO. 200 OF 312	

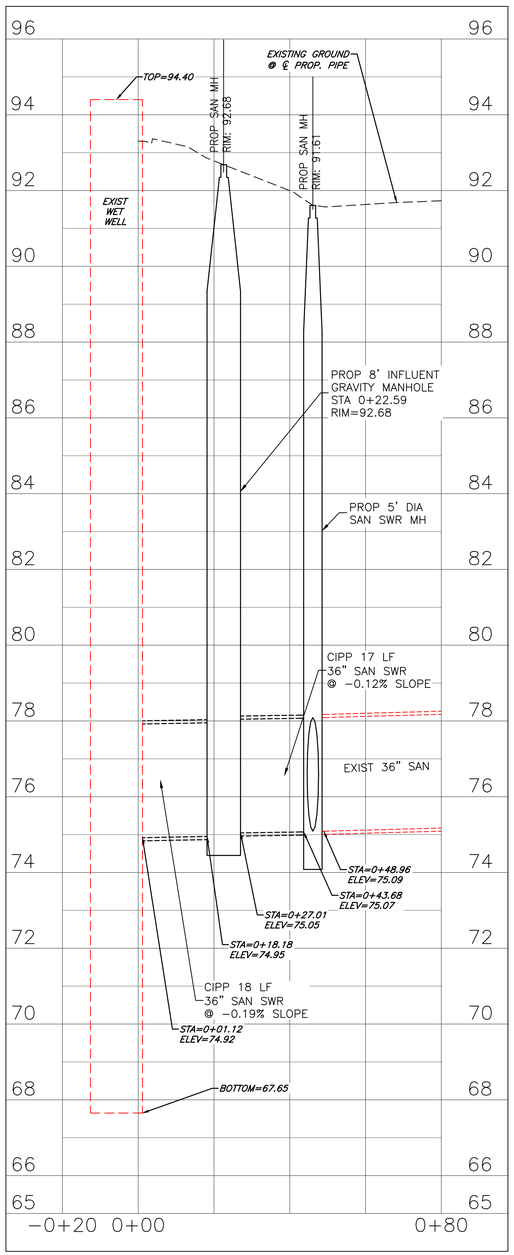

PROFILE FROM WET WELL TO EXISTING SSMH IN STREET

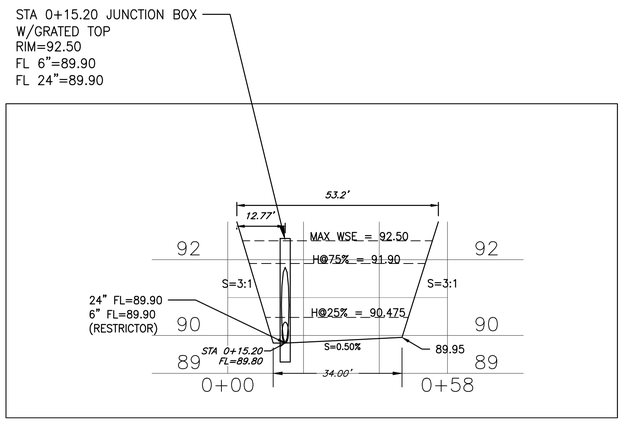

DETENTION POND PROFILE

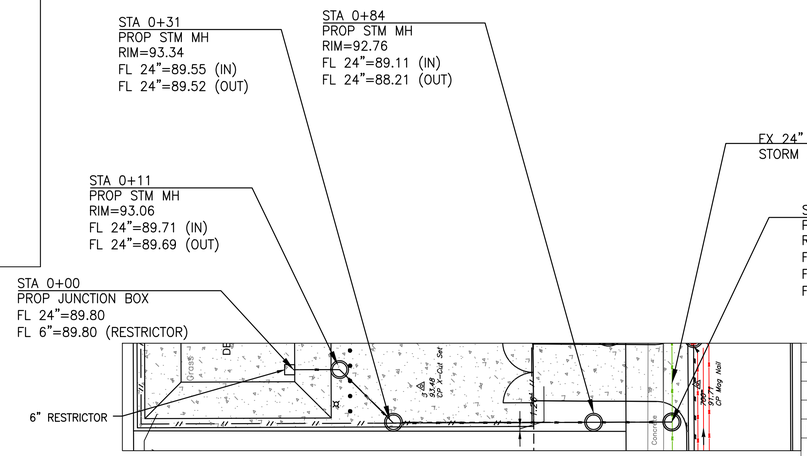

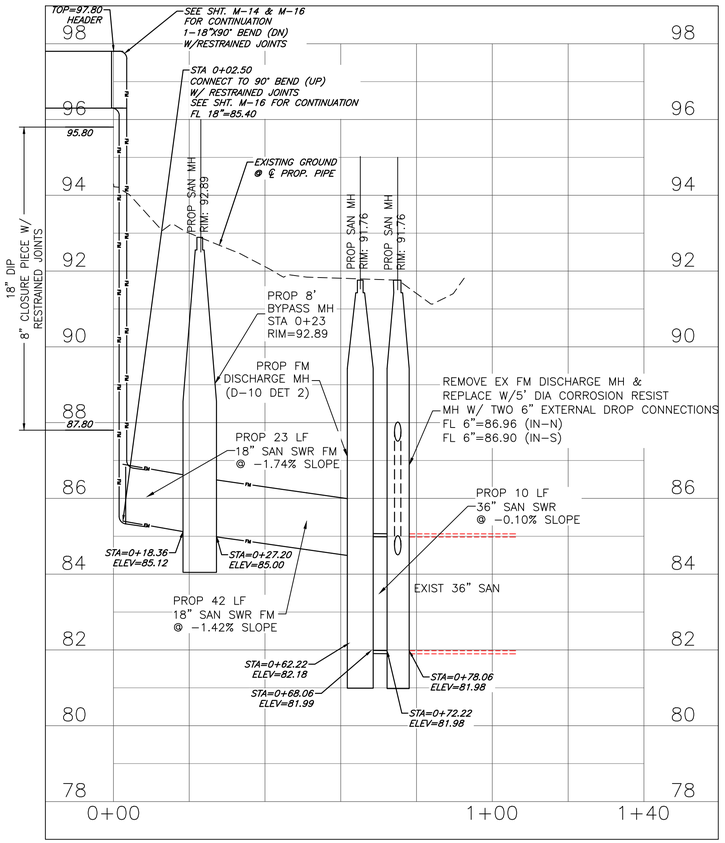

PROFILE FROM PROP FM DISCHARGE MH TO EX SAN SWR

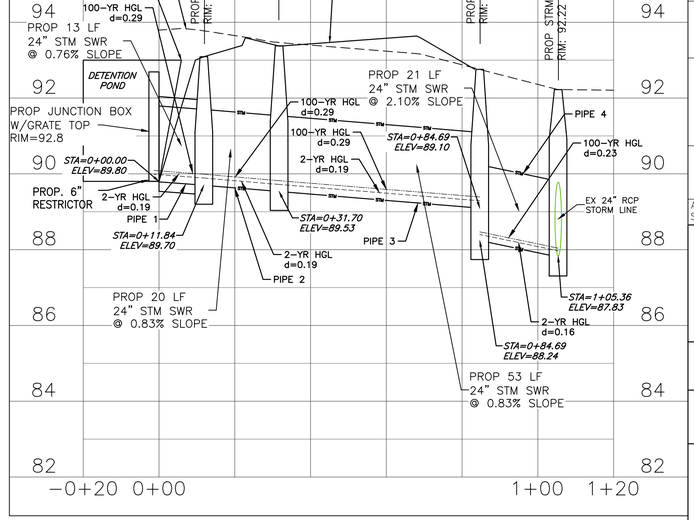

PLAN & PROFILE FROM DETENTION POND TO EX STRM SWR

NO	DATE	REVISION	APPROVED

NOTICE:
FOR YOUR SAFETY, YOU ARE REQUIRED BY TEXAS LAW TO CALL 811 AT LEAST 48 HOURS BEFORE YOU DIG SO THAT UNDERGROUND LINES CAN BE MARKED. THIS SIGNATURE DOES NOT FULFILL YOUR OBLIGATION TO CALL 811

VERIFICATION OF PRIVATE UTILITY LINES

Mike Brower 04/10/26
Date

CenterPoint Energy natural gas utilities shown. (Gas service lines are not shown). This signature not be used for conflict verification.

Signature valid for six months.

Mike Brower 04/10/26
Date

CenterPoint Energy/UNDERGROUND Electrical Facilities Verification ONLY.
(This signature verifies existing underground facilities – not to be used for conflict verification)

Signature valid for six months.

Chris Primrose 4/16/26
Date

Approved for AT&T underground conduit facilities only.
Signature valid for one year.

EJES INCORPORATED
Corporate Office
12801 North Central Expressway, Suite 700
Dallas, Texas 75243
(P) 214-343-1210
(F) 214-343-3885
Houston Office
6161 Savoy Drive, Suite 830
Houston, Tx. 77036
(P) 281-272-1612
(F) 281-272-1619
EJES, Inc. Copyright © 2017
FIRM REGISTRATION No. 2488

SURVEYED BY: AMANI ENGR.
FB NO. P-6335

STATE OF TEXAS
TANITA GILBERT ALEXANDER
88719
LICENSED
PROFESSIONAL ENGINEER
4-8-26

CITY OF HOUSTON
HOUSTON PUBLIC WORKS

LIFT STATION REHABILITATION & RECONSTRUCTION CONSENT DECREE

EMNORA #2 LIFT STATION YARD PIPING PROFILES

C-43

WBS NUMBER	FOR CITY OF HOUSTON USE ONLY
R-000267-0175-4	
DRAWING SCALE	
1"=20'	
CITY OF HOUSTON PM	
NP NAWARAJ PANTA, P.E.	
SHEET NO. 201 OF 312	

NOTES

1. MANHOLES LOCATED IN VEHICULAR TRAVELWAYS SHALL HAVE COVERS RATED FOR H8-20 LOADING.

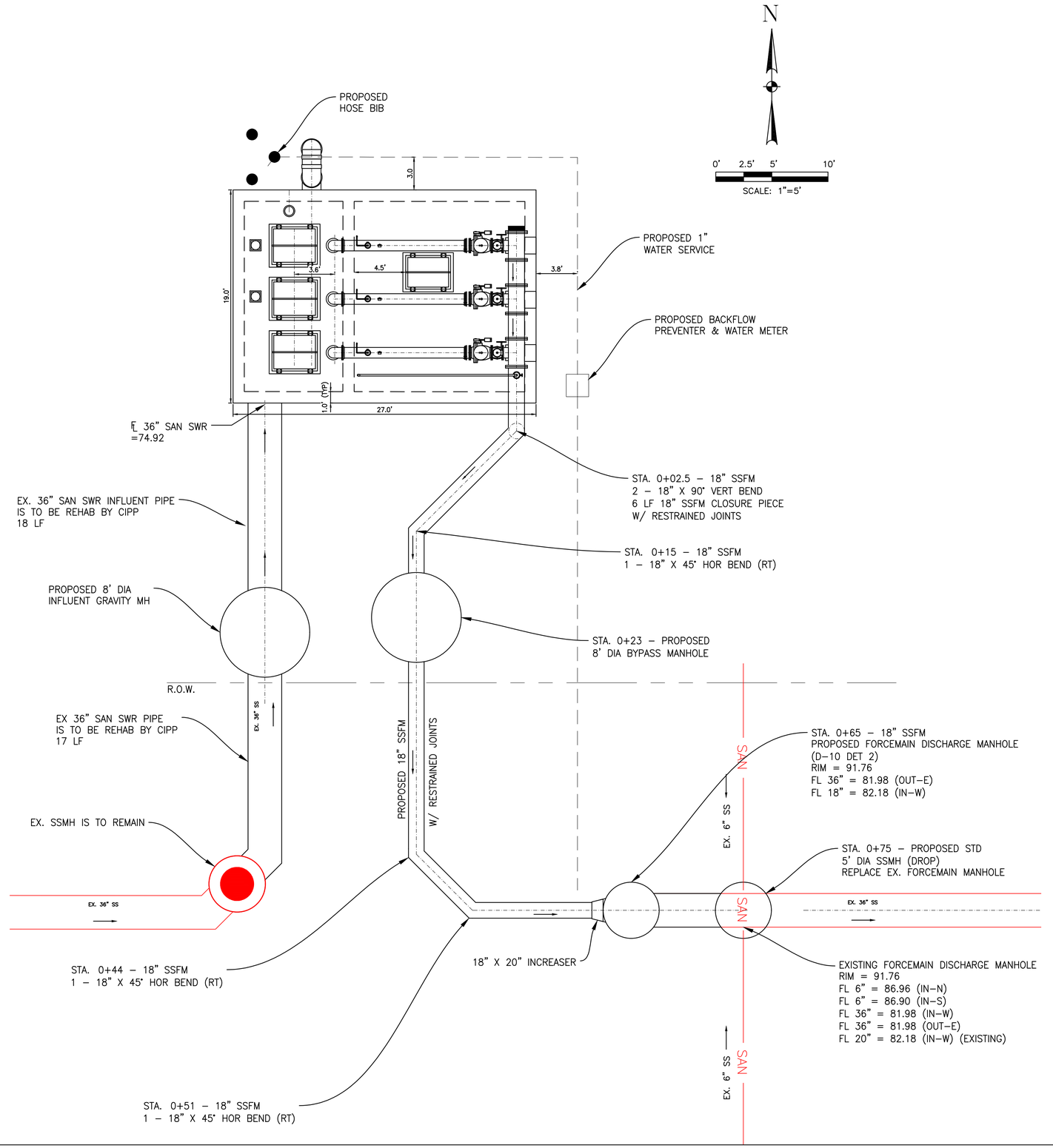

NO	DATE	REVISION	APPROVED

NOTICE:
FOR YOUR SAFETY, YOU ARE REQUIRED BY TEXAS LAW TO CALL 811 AT LEAST 48 HOURS BEFORE YOU DIG SO THAT UNDERGROUND LINES CAN BE MARKED. THIS SIGNATURE DOES NOT FULFILL YOUR OBLIGATION TO CALL 811

VERIFICATION OF PRIVATE UTILITY LINES

Mike Browe 03/25/26
Date

CenterPoint Energy natural gas utilities shown. (Gas service lines are not shown). This signature not be used for conflict verification.

Signature valid for six months.

Mike Browe 03/25/26
Date

CenterPoint Energy/UNDERGROUND Electrical Facilities Verification ONLY.
(This signature verifies existing underground facilities – not to be used for conflict verification)

Signature valid for six months.

Chris Primrose 3/25/26
Date

Approved for AT&T underground conduit facilities only.
Signature valid for one year.

EJES INCORPORATED
Corporate Office
12801 North Central Expressway, Suite 700
Dallas, Texas 75243
(P) 214-343-1210
(F) 214-343-3885
Houston Office
6161 Savoy Drive, Suite 830
Houston, Tx. 77036
(P) 281-272-1612
(F) 281-272-1619
EJES, Inc. Copyright © 2017
FIRM REGISTRATION No. 2488

SURVEYED BY: AMANI ENGR.
FB NO. P-6335

STATE OF TEXAS
TANITA GILBERT ALEXANDER
88719
LICENSED PROFESSIONAL ENGINEER
3-20-26
Tanita Gilbert Alexander

CITY OF HOUSTON
HOUSTON PUBLIC WORKS

LIFT STATION REHABILITATION & RECONSTRUCTION CONSENT DECREE

EMNORA #2 LIFT STATION
WET WELL – PLAN

M-14

WBS NUMBER	FOR CITY OF HOUSTON USE ONLY
R-000267-0175-4	
DRAWING SCALE	
1"=5'	
CITY OF HOUSTON PM	
NP NAWARAJ PANTA, P.E.	
SHEET NO. 202 OF 312	

PIPING PLAN @ GRADE

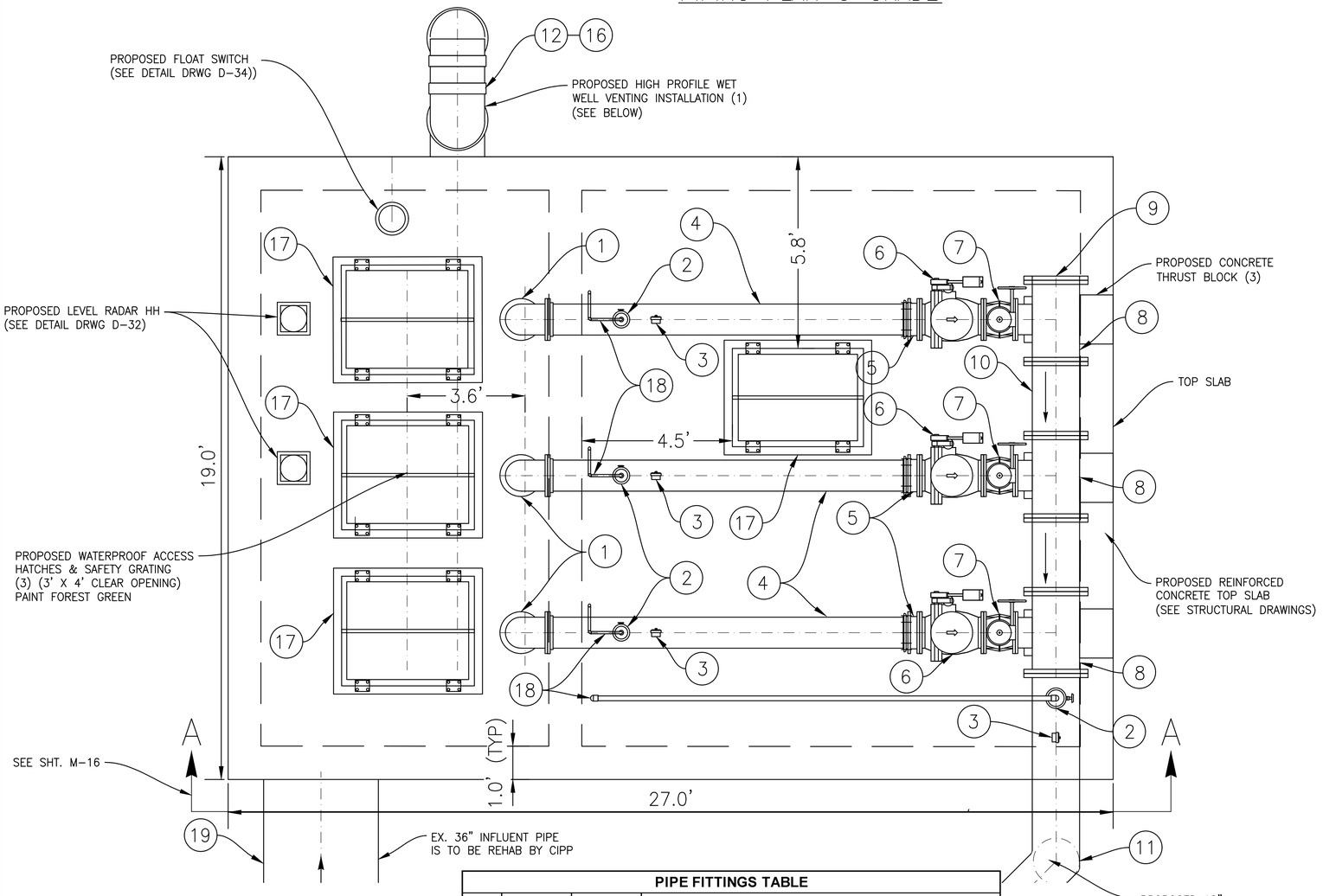

PIPE FITTINGS TABLE			
No.	QTY	SIZE	DESCRIPTION
1	3	12"	D.I. 90° BEND (FLG X FLG)
2	4	2"	AIR & VACUUM VALVE
3	4	1/4"	PRESSURE GAUGE
4	3	12"	D.I. PIPE (FLG X FLG)
5	9	12"	RESTRAINED FLANGE COUPLING ADAPTER
6	3	12"	CHECK VALVE (FLG X FLG)
7	3	12"	PLUG VALVE (FLG X FLG)
8	3	18" X 12"	D.I. REDUCING TEE (FLG)
9	1	18"	BLIND FLANGE
10	3	18"	D.I. PIPE (FLG X FLG)
11	2	18"	D.I. 90° BEND (FLG X FLG)
12	2	20"	316 SS OR FRP 90° BEND W/WELDED
13	1	20"	D.I. WALL PIPE W/WATERSTOP COLLAR (PE X FLG)
14	1	20"	316 SS OR FRP PIPE (FLG X THREADED//WELDED (PE X FLG)
15	1	20"	316 SS OR FRP 90° BEND (FLG X FLG)
16	1	20"	SS BIRD SCREEN
17	4	3' X 4'	DOUBLE LEAF ACCESS HATCH
18	4	1"	SS AIR RELEASE DRAIN LINE
19	1	36"	CIPP SAN SWR PIPE

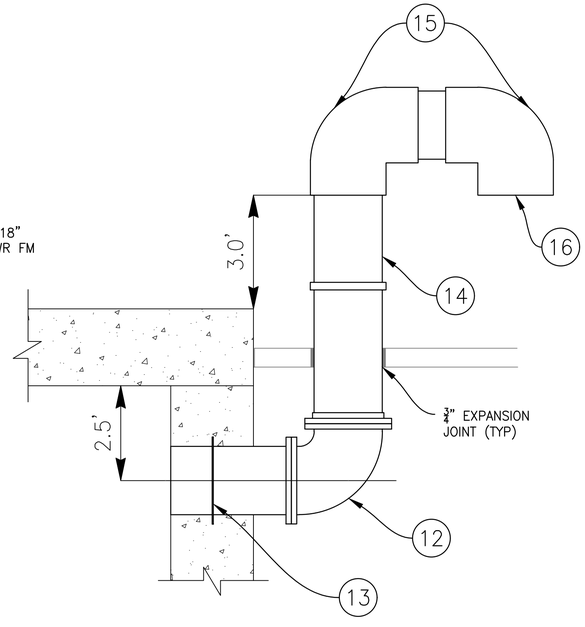

VENT PIPE DETAIL
NTS

N

0' 1' 2' 4'

SCALE: 1"=2'

NO	DATE	REVISION	APPROVED

NOTICE:
FOR YOUR SAFETY, YOU ARE REQUIRED BY TEXAS LAW TO CALL 811 AT LEAST 48 HOURS BEFORE YOU DIG SO THAT UNDERGROUND LINES CAN BE MARKED. THIS SIGNATURE DOES NOT FULFILL YOUR OBLIGATION TO CALL 811

VERIFICATION OF PRIVATE UTILITY LINES

Mike Brower 03/25/26
Date

CenterPoint Energy natural gas utilities shown. (Gas service lines are not shown). This signature not be used for conflict verification.

Signature valid for six months.

Mike Brower 03/25/26
Date

CenterPoint Energy/UNDERGROUND Electrical Facilities Verification ONLY.
(This signature verifies existing underground facilities – not to be used for conflict verification)

Signature valid for six months.

Chris Primrose 3/25/26
Date

Approved for AT&T underground conduit facilities only.
Signature valid for one year.

EJES INCORPORATED
Corporate Office
12801 North Central Expressway, Suite 700
Dallas, Texas 75243
(P) 214-343-1210
(F) 214-343-3886

Houston Office
6161 Savoy Drive, Suite 830
Houston, Tx. 77036
(P) 281-272-1612
(F) 281-272-1619

EJES, Inc. Copyright © 2017
FIRM REGISTRATION No. 2488

SURVEYED BY: AMANI ENGR.
FB NO. P-6335

STATE OF TEXAS
TANITA GILBERT ALEXANDER
88719
LICENSED
PROFESSIONAL ENGINEER
5-20-26

CITY OF HOUSTON
HOUSTON PUBLIC WORKS

LIFT STATION REHABILITATION & RECONSTRUCTION
CONSENT DECREE

EMNORA #2 LIFT STATION
WET WELL – PIPING PLAN
M-15

WBS NUMBER	FOR CITY OF HOUSTON USE ONLY
R-000267-0175-4	
DRAWING SCALE	
1"=2'	
CITY OF HOUSTON PM	
NP NAWARAJ PANTA, P.E.	
SHEET NO. 203 OF 312	

PIPE FITTINGS TABLE			
No.	QTY	SIZE	DESCRIPTION
1	3	18"	D.I. 90° BEND (FLG X FLG)
2	3	12"	D.I. PIPE (FLG X FLG)
3	4	2"	AIR & VACUUM VALVE
4	3	12"	CHECK VALVE (FLG X FLG)
5	3	12"	PLUG VALVE (FLG X FLG)
6	3	18" X 12"	D.I. REDUCING TEE (FLG)
7	3	12"	D.I. 90° BEND (FLG X FLG)
8	3	12"	D.I. WALL PIPE W/WATERSTOP COLLAR (FLG X FLG)
9	4	3' X 4'	DOUBLE LEAF ACCESS HATCH W/SAFETY GRATING
10	2	20"	SS (S10) 90° BEND W/WELDED
11	1	20"	D.I. WALL PIPE W/WATERSTOP COLLAR (PE X FLG)
12	1	20"	SS (S10) PIPE (FLG X THREADED/WELDED (PE X FLG)
13	1	20"	SS (S10) 90° BEND (FLG X FLG)
14	1	20"	SS BIRD SCREEN
15	3	12" X 8"	D.I. REDUCER (FLG X FLG)
16	4	1"	SS AIR RELEASE DRAIN LINE
17	6	12"	D.I. 45° BEND (FLG X FLG)
18	9	12"	RESTRAINED FLANGE COUPLING ADAPTERS
19	4	1/4"	PRESSURE GAUGE
20	1	18"	D.I. PIPE (FLG X FLG)
21	1	18"	D.I. 90° BEND (FLG X FLG)

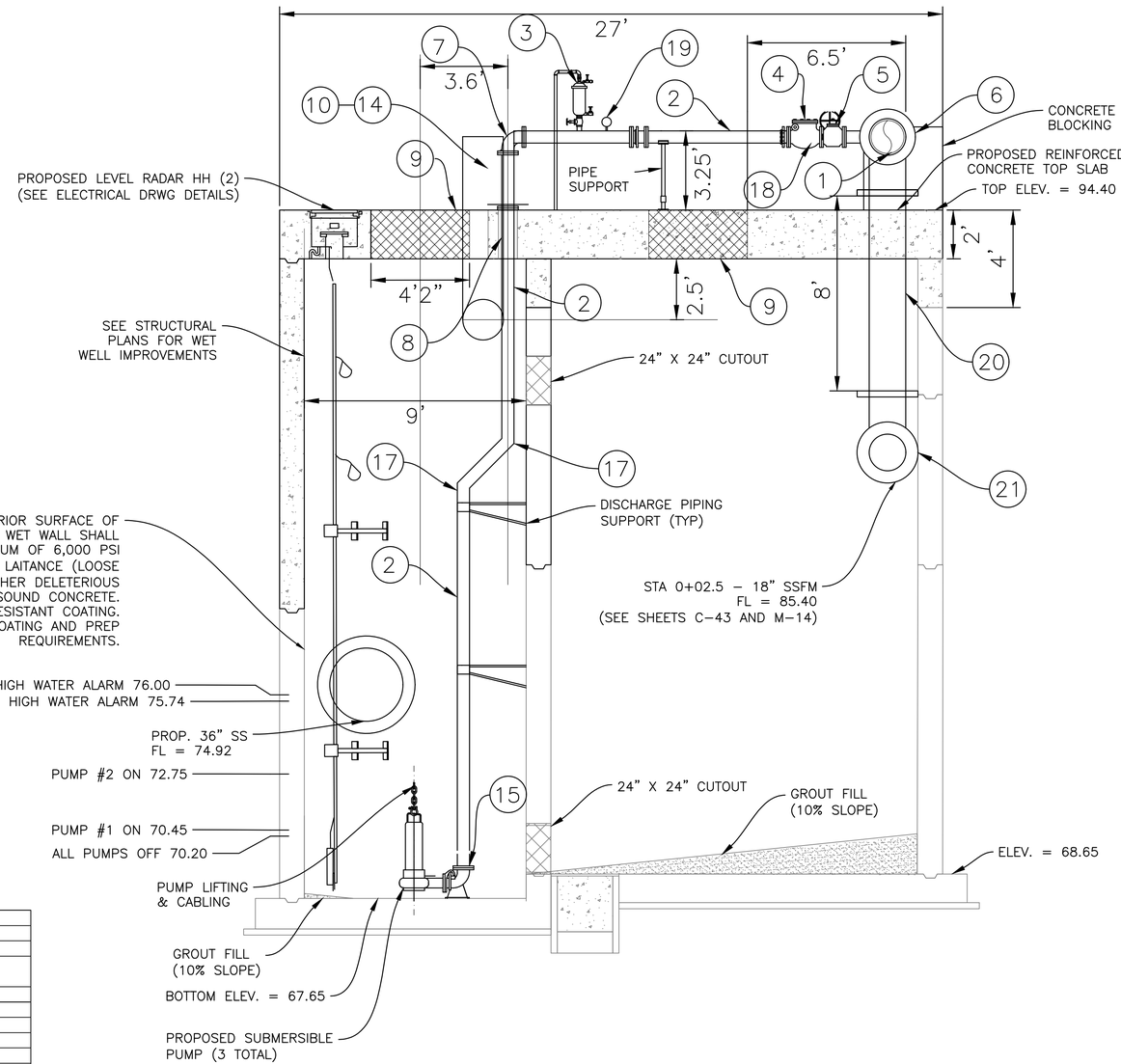

WET WELL/DRY WELL SECTION
SECTION A–A
(FROM SHT. M–15)

STATION OPERATION TABLES			
Rising Level Cycle			
Water Level Depth	**Water Level Elevation**	**Action**	**Pump(s) in Operation**
2.55	70.20	Pump Off Level - No Action	All Pumps Are Off
2.80	70.45	Lead Pump Turns On	Lead Pump On
5.10	72.75	Second Pump Turns On	Lead & Second Pumps On
8.09	75.74	High Waterl Alarm On	High Water Alarm Sound
8.35	76.00	High High Level Alarm On (Float On Level)	All Duty Pumps On (Floats)
Falling Level Cycle			
Water Level Depth	**Water Level Elevation**	**Action**	**Pump(s) in Operation**
2.55	70.20	Float Off Level	All Pumps Off Floats
5.10	72.75	High Water Level Alarm Off	Lead & Second Pumps On
4.60	72.25	Lead Pump Turns Off	Second Pump Is On
2.05	69.70	Second Pump Turns Off (Low Level Alarm)	All Pumps Stopped - Standby Pump Switches To Lead Pump

NOTES

1. DIMENSIONS NOTED ARE RELATIVE TO THE PUMP SIZE AND MANUFACTURER SELECTED. CONTRACTOR SHALL CONFIRM.
2. SEE DETAIL AND STRUCTURAL DRAWINGS FOR DIMENSIONS AND INFORMATION NOT SHOWN.
3. PUMP ANCHOR BOLTS ARE TO BE ADHESIVE TYPE, AND EMBEDDED IN CONCRETE SLAB. CONTRACTOR TO SUBMIT DESIGN OF PUMP ANCHOR BOLTS AND PATTERN, INCLUDING CALCULATIONS, DURING SHOP DRAWING SUBMISSION.
4. ALL PIPING IN THE WET WELL SHALL BE FLANGED. NO FLANGED COUPLING ADAPTORS, OR VICTAULIC STYLE COUPLINGS SHALL BE PERMITTED INSIDE THE WET WELL.
5. PROTECTIVE COATING IS APPLIED FOR ALL THE PIPES, FITTINGS AND EQUIPMENT WITHIN THE WET WELL.
6. ACCESS HATCHES TO BE PAINTED FOREST GREEN.

NO	DATE	REVISION	APPROVED

NOTICE:
FOR YOUR SAFETY, YOU ARE REQUIRED BY TEXAS LAW TO CALL 811 AT LEAST 48 HOURS BEFORE YOU DIG SO THAT UNDERGROUND LINES CAN BE MARKED. THIS SIGNATURE DOES NOT FULFILL YOUR OBLIGATION TO CALL 811

VERIFICATION OF PRIVATE UTILITY LINES

Mike Brower 03/25/26
Date

CenterPoint Energy natural gas utilities shown. (Gas service lines are not shown). This signature not be used for conflict verification.
Signature valid for six months.

Mike Brower 03/25/26
Date

CenterPoint Energy/UNDERGROUND Electrical Facilities Verification ONLY.
(This signature verifies existing underground facilities – not to be used for conflict verification)
Signature valid for six months.

Chris Primrosa 3/25/26
Date

Approved for AT&T underground conduit facilities only.
Signature valid for one year.

EJES INCORPORATED
Corporate Office
12801 North Central Expressway, Suite 700
Dallas, Texas 75243
(P) 214-343-1210
(F) 214-343-3885
Houston Office
10370 Harry Drive, Suite 850
Houston, Tx. 77036
(P) 281-272-1612
(F) 281-272-1619

EJES, Inc. Copyright © 2017
FIRM REGISTRATION No. 2488

SURVEYED BY: AMANI ENGR.
FB NO. P-6335

STATE OF TEXAS
TANITA GILBERT ALEXANDER
88719
LICENSED PROFESSIONAL ENGINEER
3-20-26

CITY OF HOUSTON
HOUSTON PUBLIC WORKS

LIFT STATION REHABILITATION & RECONSTRUCTION CONSENT DECREE

EMNORA #2 LIFT STATION WET WELL – SECTION

M–16

WBS NUMBER	FOR CITY OF HOUSTON USE ONLY
R-000267-0175-4	
DRAWING SCALE	
1"=3'	
CITY OF HOUSTON PM	
NP NAWARAJ PANTA, P.E.	
SHEET NO. 204 OF 312	

EMNORA #2 LIFT STATION - 25 HP Pumps
SYSTEM & PUMP CURVES

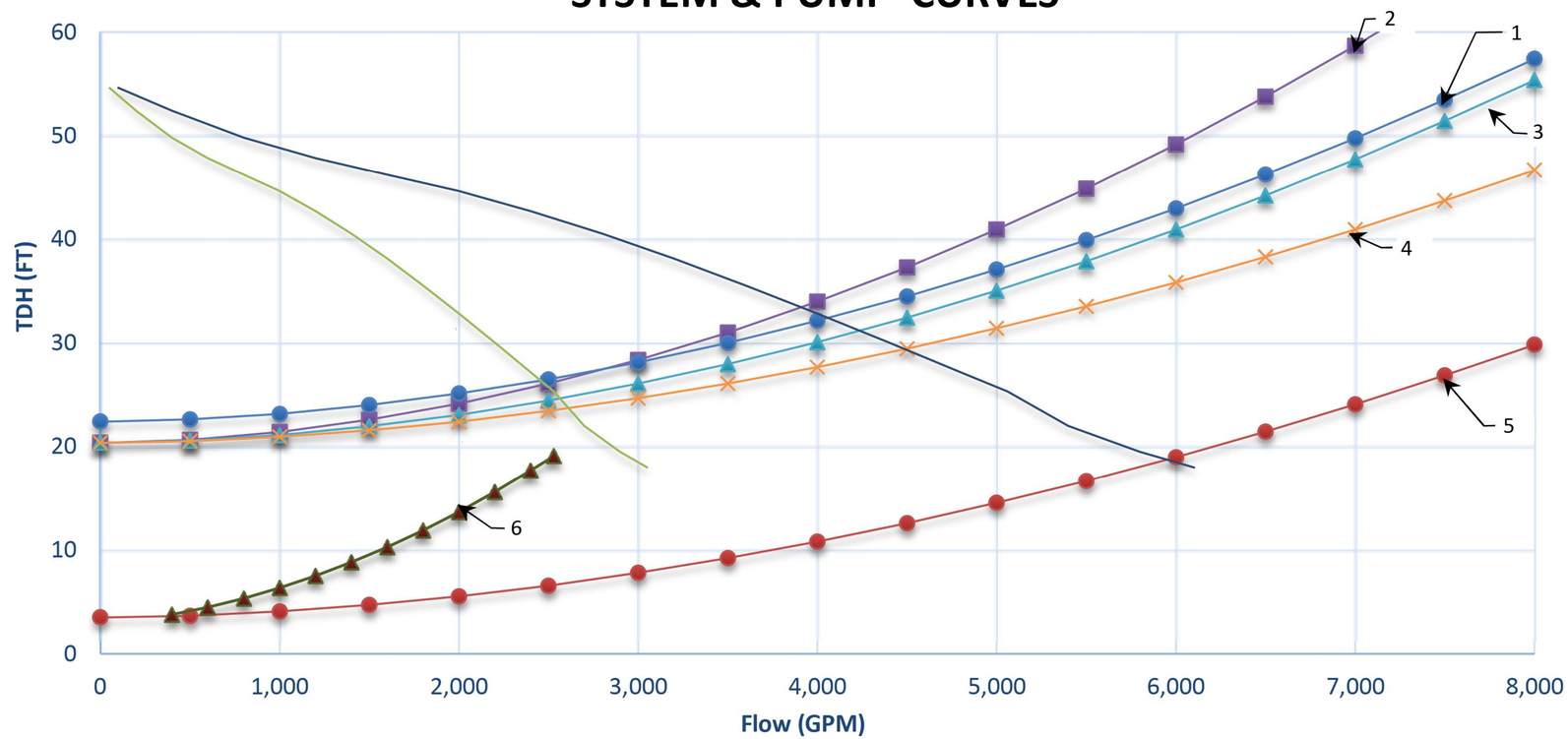

PUMP DATA TABLE			
PUMP CHARACTERISTICS	PUMP 1	PUMP 2	PUMP 3
Motor Data			
Nominal Size (hp)	25	25	25
Max Speed (rpm)	1178	1178	1178
Solids Passage			
Min Sphere (in)	3	3	3
Capacity (gpm)			
Design	2080	2080	2080
Runout	2800	2800	2800
Disharge Head (ft)			
Design	32	32	32
Runout	16.8	16.8	16.8
Shutoff	59.6	59.6	59.6
Efficiency (%)			
Design	80.7	80.7	80.7
NPSHA (ft)			
Design	3.2	3.2	3.2
Runout	18.5	18.5	18.5
Pump Cycle Time (min)	6	6	6
Cumulative Capacity (gpm)	2140	4060	–

PUMP CURVE NOTES:

1. LOW NORMAL OPERATING LEVEL C=120 – DESIGN.
2. HIGH NORMAL OPERATING LEVEL C=100 – INFORMATION ONLY (TCEQ).
3. HIGH NORMAL OPERATING LEVEL C=120 – DESIGN.
4. HIGH NORMAL OPERATING LEVEL C=140 INFORMATION ONLY.
5. EMERGENCY FLOODED OPERATING LEVEL C=140 – MAXIMUM DISCHARGE.
6. NET POSITIVE HEAD SUCTION REQUIRED (NPSHR) BASED ON NORMAL OPERATING WATER LEVEL.

NO	DATE	REVISION	APPROVED

NOTICE:
FOR YOUR SAFETY, YOU ARE REQUIRED BY TEXAS LAW TO CALL 811 AT LEAST 48 HOURS BEFORE YOU DIG SO THAT UNDERGROUND LINES CAN BE MARKED. THIS SIGNATURE DOES NOT FULFILL YOUR OBLIGATION TO CALL 811

VERIFICATION OF PRIVATE UTILITY LINES

Date

CenterPoint Energy natural gas utilities shown. (Gas service lines are not shown). This signature not be used for conflict verification.
Signature valid for six months.

Date

CenterPoint Energy/UNDERGROUND Electrical Facilities Verification ONLY.
(This signature verifies existing underground facilities – not to be used for conflict verification)
Signature valid for six months.

Date

Approved for AT&T underground conduit facilities only.
Signature valid for one year.

EJES INCORPORATED
Corporate Office
12801 North Central Expressway, Suite 700
Dallas, Texas 75243
(P) 214-343-1210
(F) 214-343-3885
Houston Office
6161 Savoy Drive, Suite 830
Houston, Tx. 77036
(P) 281-272-1612
(F) 281-272-1619
EJES, Inc. Copyright © 2017
FIRM REGISTRATION No. 2488

SURVEYED BY: AMANI ENGR.
FB NO. P–6335

STATE OF TEXAS
TANITA GILBERT ALEXANDER
88719
LICENSED
PROFESSIONAL ENGINEER
3-20-26

CITY OF HOUSTON
HOUSTON PUBLIC WORKS

LIFT STATION REHABILITATION & RECONSTRUCTION
CONSENT DECREE

EMNORA #2 LIFT STATION
WET WELL – PUMP CURVE DATA

M–17

WBS NUMBER	FOR CITY OF HOUSTON USE ONLY
R–000267–0175–4	
DRAWING SCALE	
1"=3'	
CITY OF HOUSTON PM	
NP NAWARAJ PANTA, P.E.	
SHEET NO. 205 OF 312	

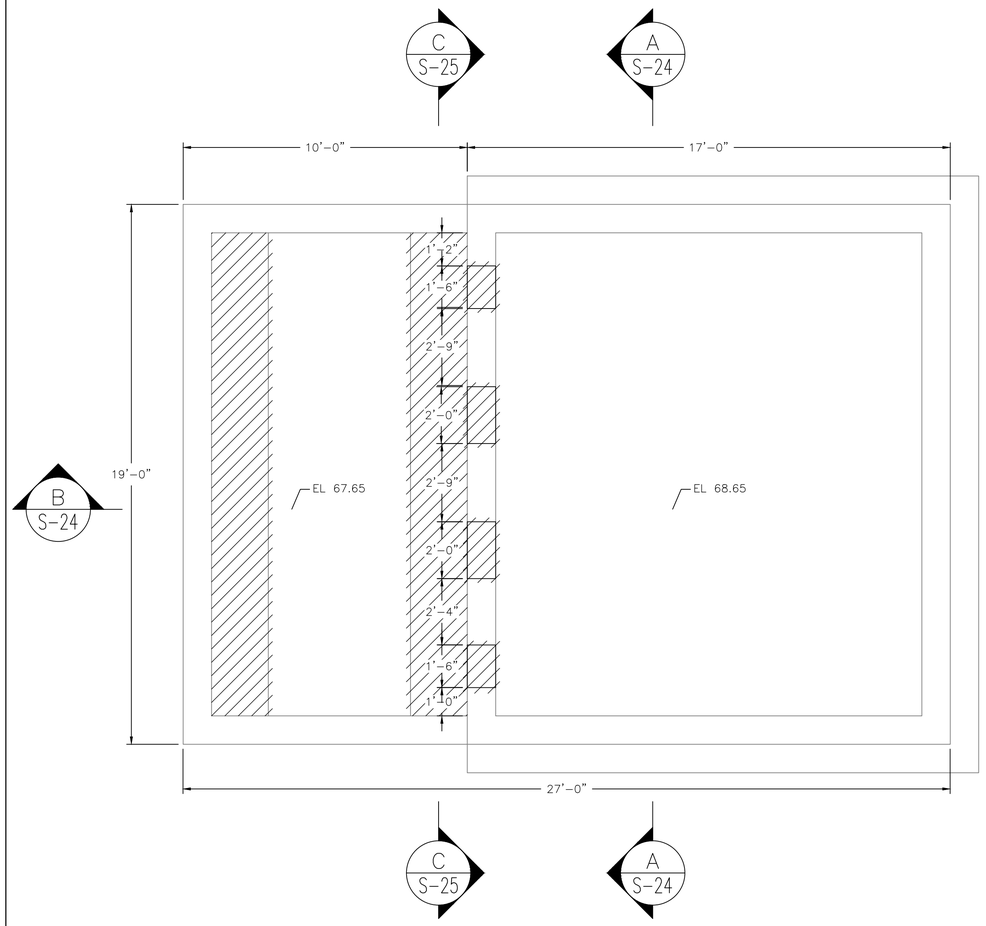

DEMOLITION PLAN @ EL 68.65

0 2' 4' 6' SCALE: 3/8"=1'-0"

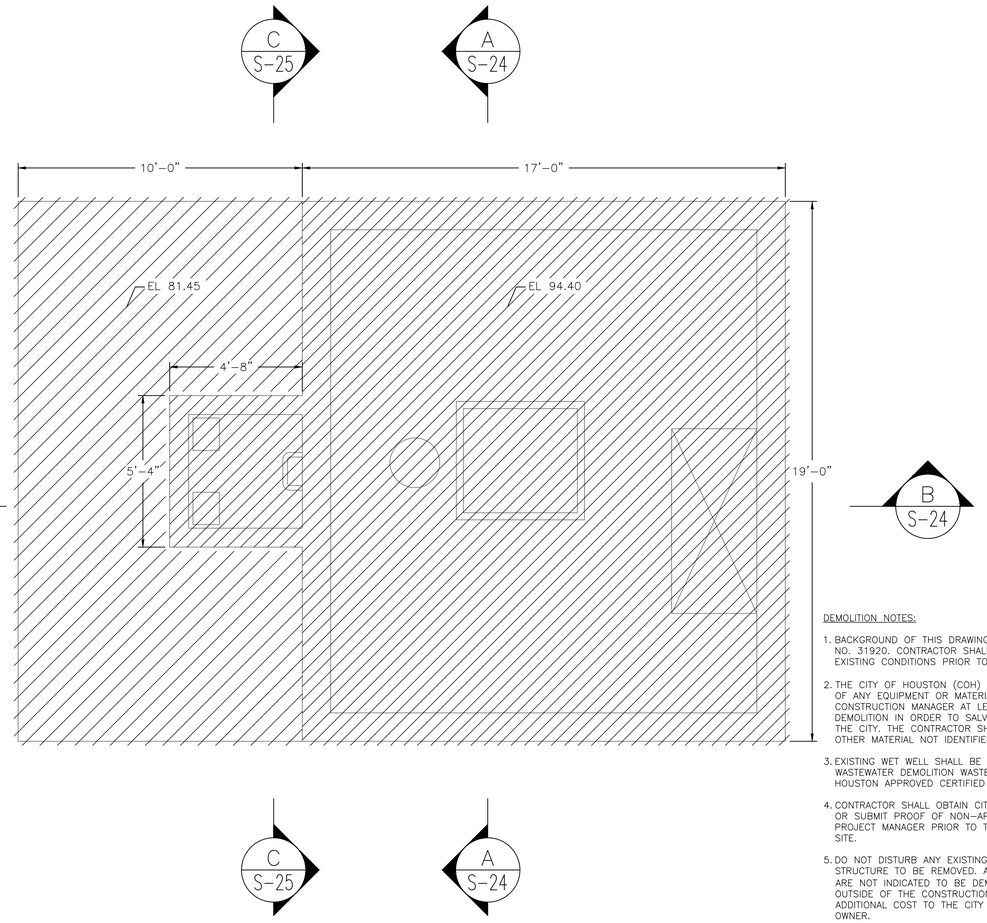

DEMOLITION PLAN @ EL 94.40

0 2' 4' 6' SCALE: 3/8"=1'-0"

N

NO.	DATE	REVISION	APP.

DEMOLITION NOTES:

1. BACKGROUND OF THIS DRAWING IS BASED ON RECORD DRAWING NO. 31920. CONTRACTOR SHALL BE RESPONSIBLE FOR VERIFYING EXISTING CONDITIONS PRIOR TO SUBMITTING BID.
2. THE CITY OF HOUSTON (COH) HAS THE FIRST RIGHT OF REFUSAL OF ANY EQUIPMENT OR MATERIAL REMOVED. CONTACT CONSTRUCTION MANAGER AT LEAST 72 HOURS PRIOR TO DEMOLITION IN ORDER TO SALVAGED ITEMS TO A LOCATION WITHIN THE CITY. THE CONTRACTOR SHALL PROPERLY DISPOSE OF ALL OTHER MATERIAL NOT IDENTIFIED FOR SALVAGE.
3. EXISTING WET WELL SHALL BE CLEANED OF ALL DEBRIS, WASTEWATER DEMOLITION WASTE AND OTHER RESIDUES BY CITY OF HOUSTON APPROVED CERTIFIED DISPOSAL CONTRACTOR .
4. CONTRACTOR SHALL OBTAIN CITY OF HOUSTON DEMOLITION PERMIT OR SUBMIT PROOF OF NON-APPLICABILITY TO COH CONSTRUCTION PROJECT MANAGER PRIOR TO THE DEMOLITION ACTIVITIES AT THE SITE.
5. DO NOT DISTURB ANY EXISTING STRUCTURE THAT ABUTS A STRUCTURE TO BE REMOVED. ANY DAMAGES TO STRUCTURES THAT ARE NOT INDICATED TO BE DEMOLISHED/REMOVED, OR THAT ARE OUTSIDE OF THE CONSTRUCTION LIMITS SHALL BE REPAIRED AT NO ADDITIONAL COST TO THE CITY AND AT NO COST TO THE PROPERTY OWNER.

LEGEND

TO BE DEMOLISHED

ARCADIS
Infrastructure · Water · Environment · Buildings
1330 Post Oak Blvd, Suite 2250
Houston, TX 77056
Tel: 713-953-4800
Fax: 713-977-4620
www.arcadis.com
Texas Registered Engineering Firm F-533

SURVEYED BY: AMANI ENGR.
FB NO. P-6335

STATE OF TEXAS
TANVIR HOSSAIN
121767
LICENSED PROFESSIONAL ENGINEER

CITY OF HOUSTON

HOUSTON PUBLIC WORKS

LIFT STATION REHABILITATION & RECONSTRUCTION CONSENT DECREE

EMNORA # 2 LIFT STATION WET WELL DEMOLITION PLAN

S-23

WBS NUMBER	FOR CITY OF HOUSTON USE ONLY
R-000267-0175-3	
DRAWING SCALE	
AS NOTED	
CITY OF HOUSTON PM	
NP NAWARAJ PANTA, P.E.	
SHEET NO. 206 OF 312	

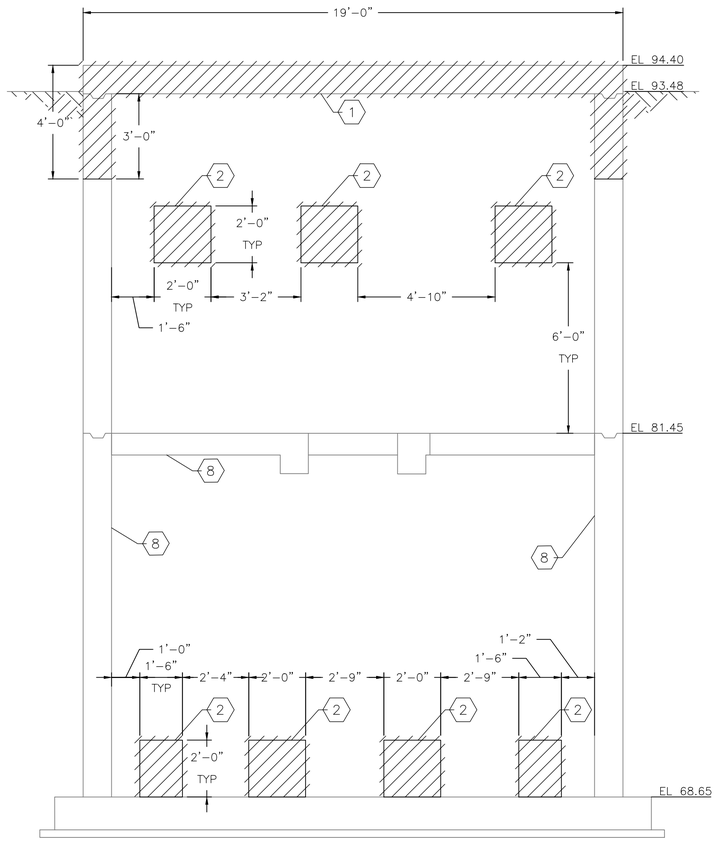

A SECTION

SCALE: 3/8"=1'-0"

0 2' 4' 6'

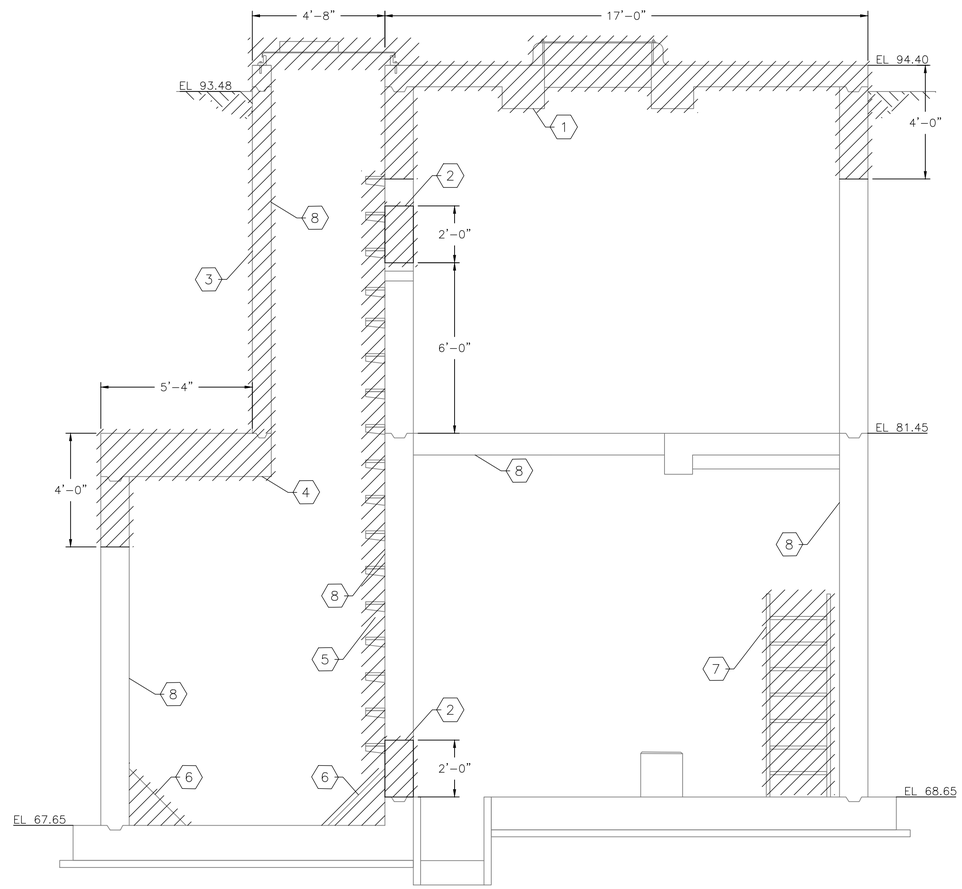

B SECTION

SCALE: 3/8"=1'-0"

0 2' 4' 6'

DEMOLITION NOTES:

1. REMOVE EXISTING TOP SLAB AND 3 FEET EXISTING WALL FROM BELOW OF THE TOP SLAB
2. 24"x24" & 18"x24" WALL CUTOUTS
3. REMOVE EXISTING WALLS
4. REMOVE EXISTING INTERMEDIATE SLAB AND 2.5 FEET EXISTING WALL FROM BELOW OF THE INTERMEDIATE SLAB
5. REMOVE EXISTING RUNGS
6. REMOVE EXISTING GROUT
7. REMOVE EXISTING STAIR
8. REMOVE EXISTING COATING / LINER SYSTEM

LEGEND:

TO BE DEMOLISHED

NO.	DATE	REVISION	APP.

ARCADIS
Infrastructure · Water · Environment · Buildings
1330 Post Oak Blvd, Suite 2250
Houston, TX 77056
Tel: 713-953-4800
Fax: 713-977-4620
www.arcadis.com
Texas Registered Engineering Firm F-533

SURVEYED BY: AMANI ENGR.
FB NO. P-6335

STATE OF TEXAS
TANVIR HOSSAIN
121767
LICENSED PROFESSIONAL ENGINEER

CITY OF HOUSTON

HOUSTON PUBLIC WORKS

LIFT STATION REHABILITATION & RECONSTRUCTION
CONSENT DECREE

EMNORA # 2 LIFT STATION
WET WELL
DEMOLITION SECTION – 1

S-24

WBS NUMBER	FOR CITY OF HOUSTON USE ONLY
R-000267-0175-4	
DRAWING SCALE	
AS NOTED	
CITY OF HOUSTON PM	
NP NAWARAJ PANTA, P.E.	
SHEET NO. 207 OF 312	

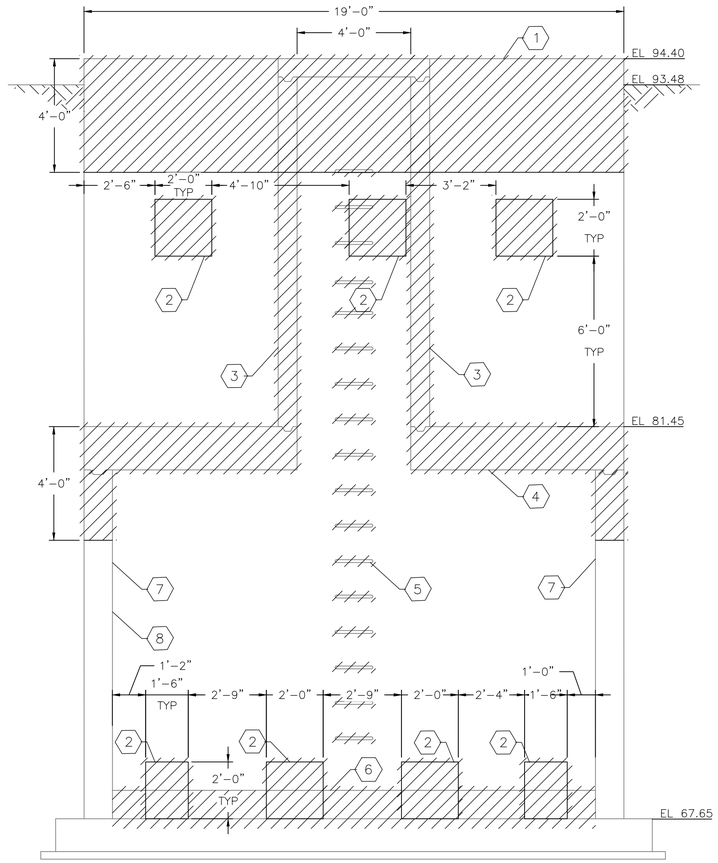

C SECTION

SCALE: 3/8"=1'-0"

0 2' 4' 6'

NO.	DATE	REVISION	APP.

DEMOLITION NOTES:

1. REMOVE EXISTING TOP SLAB AND 3 FEET EXISTING WALL FROM BELOW OF THE TOP SLAB
2. 24"x24" & 18"x24" WALL CUTOUTS
3. REMOVE EXISTING WALLS
4. REMOVE EXISTING INTERMEDIATE SLAB AND 2.5 FEET EXISTING WALL FROM BELOW OF THE INTERMEDIATE SLAB
5. REMOVE EXISTING RUNGS
6. REMOVE EXISTING GROUT
7. REMOVE EX. COATING / LINER SYSTEM
8. REMOVE EXISTING COATING / LINER SYSTEM

LEGEND

TO BE DEMOLISHED

ARCADIS
Infrastructure · Water · Environment · Buildings
1330 Post Oak Blvd, Suite 2250
Houston, TX 77056
Tel: 713-953-4800
Fax: 713-977-4620
www.arcadis.com
Texas Registered Engineering Firm F-533

SURVEYED BY: AMANI ENGR.
FB NO. P-6335

STATE OF TEXAS
TANVIR HOSSAIN
121767
LICENSED PROFESSIONAL ENGINEER

CITY OF HOUSTON

HOUSTON PUBLIC WORKS

LIFT STATION REHABILITATION & RECONSTRUCTION
CONSENT DECREE

EMNORA # 2 LIFT STATION
WET WELL
DEMOLITION SECTION – II

S-25

WBS NUMBER	FOR CITY OF HOUSTON USE ONLY
R-000267-0175-4	
DRAWING SCALE	
AS NOTED	
CITY OF HOUSTON PM	
NP NAWARAJ PANTA, P.E.	
SHEET NO. 208 OF 312	

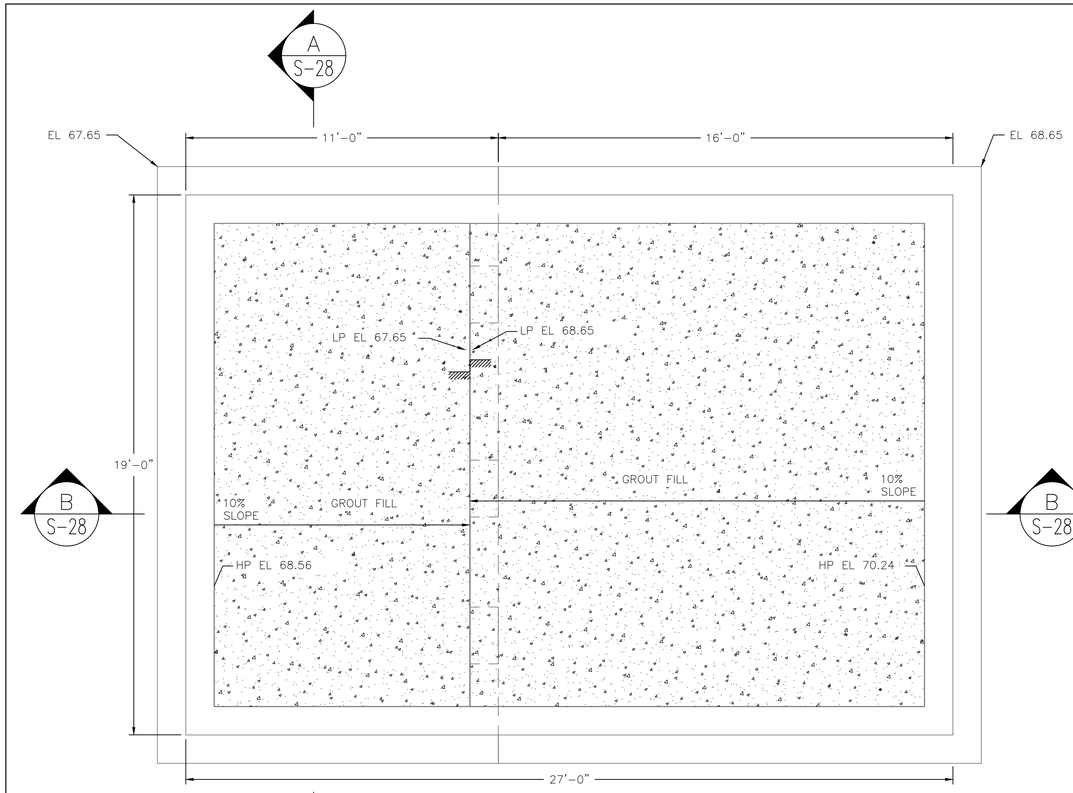

PLAN VIEW @ EL 70.24

0 2' 4' 6' SCALE: 3/8"=1'-0"

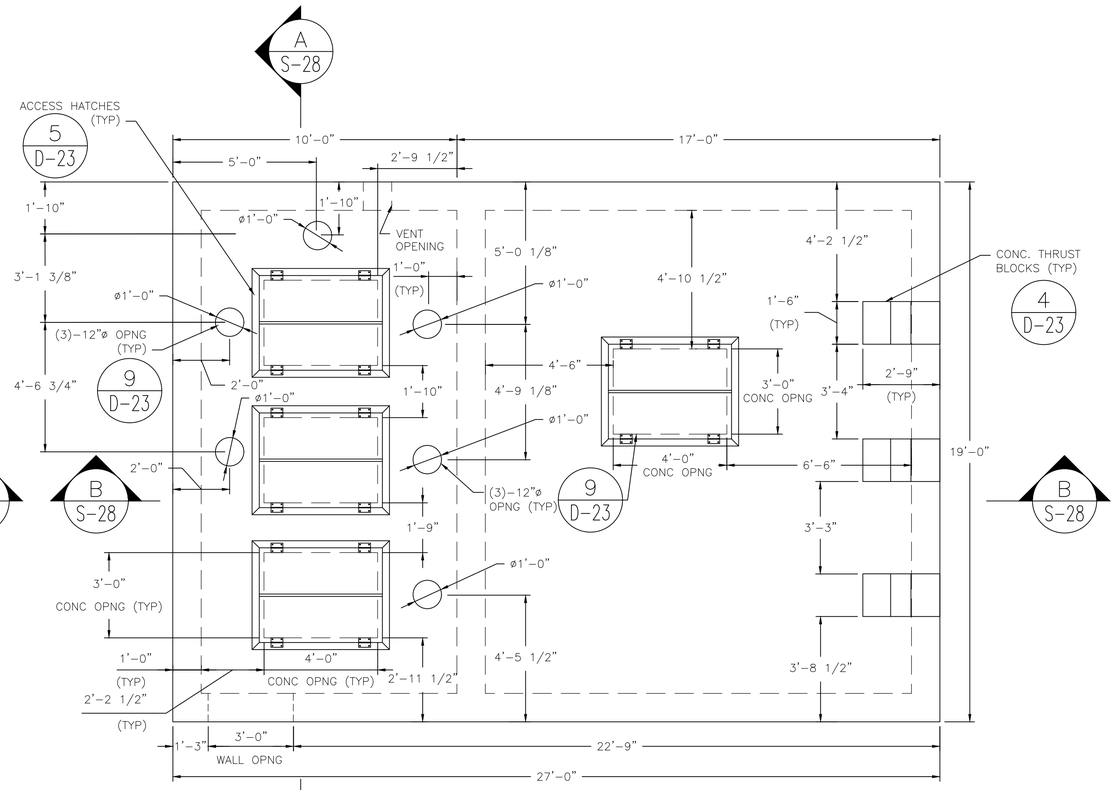

PLAN VIEW @ EL 94.40

0 2' 4' 6' SCALE: 3/8"=1'-0"

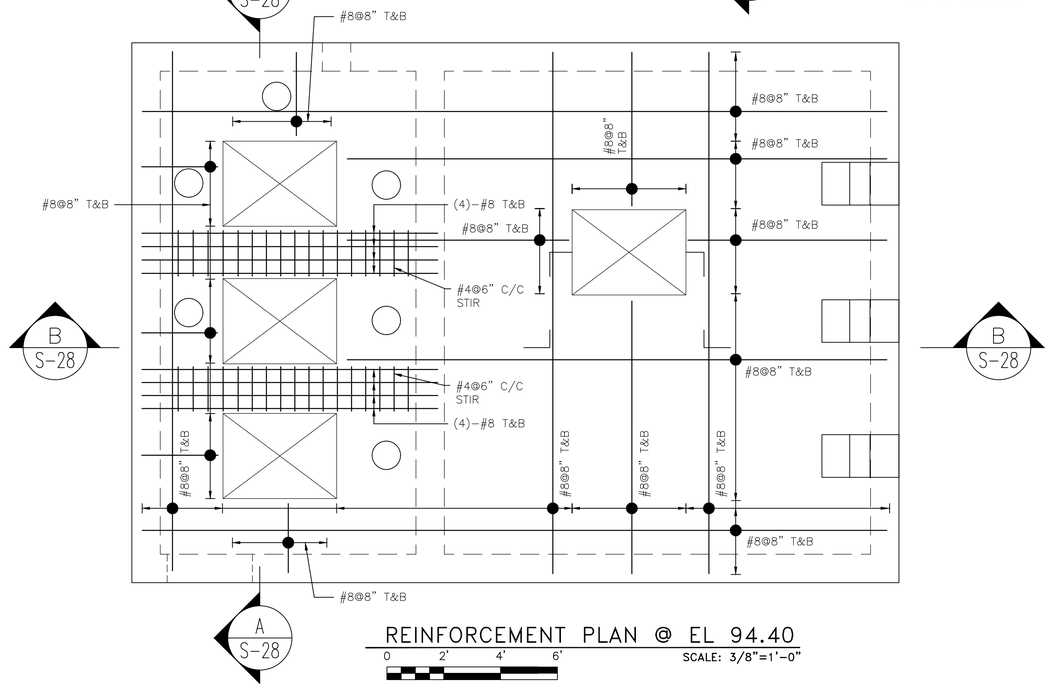

REINFORCEMENT PLAN @ EL 94.40

0 2' 4' 6' SCALE: 3/8"=1'-0"

N

NO.	DATE	REVISION	APP.

ARCADIS
Infrastructure · Water · Environment · Buildings
1330 Post Oak Blvd, Suite 2250
Houston, TX 77056
Tel: 713-953-4800
Fax: 713-977-4620
www.arcadis.com
Texas Registered Engineering Firm F-533

SURVEYED BY: AMANI ENGR.
FB NO. P-6335

STATE OF TEXAS
TANVIR HOSSAIN
121767
LICENSED PROFESSIONAL ENGINEER

CITY OF HOUSTON

HOUSTON PUBLIC WORKS

LIFT STATION REHABILITATION & RECONSTRUCTION
CONSENT DECREE

EMNORA # 2 LIFT STATION
WET WELL
PLANS

S-26

WBS NUMBER	FOR CITY OF HOUSTON USE ONLY
R-000267-0175-4	
DRAWING SCALE	
AS NOTED	
CITY OF HOUSTON PM	
NP NAWARAJ PANTA, P.E.	
SHEET NO. 209 OF 312	

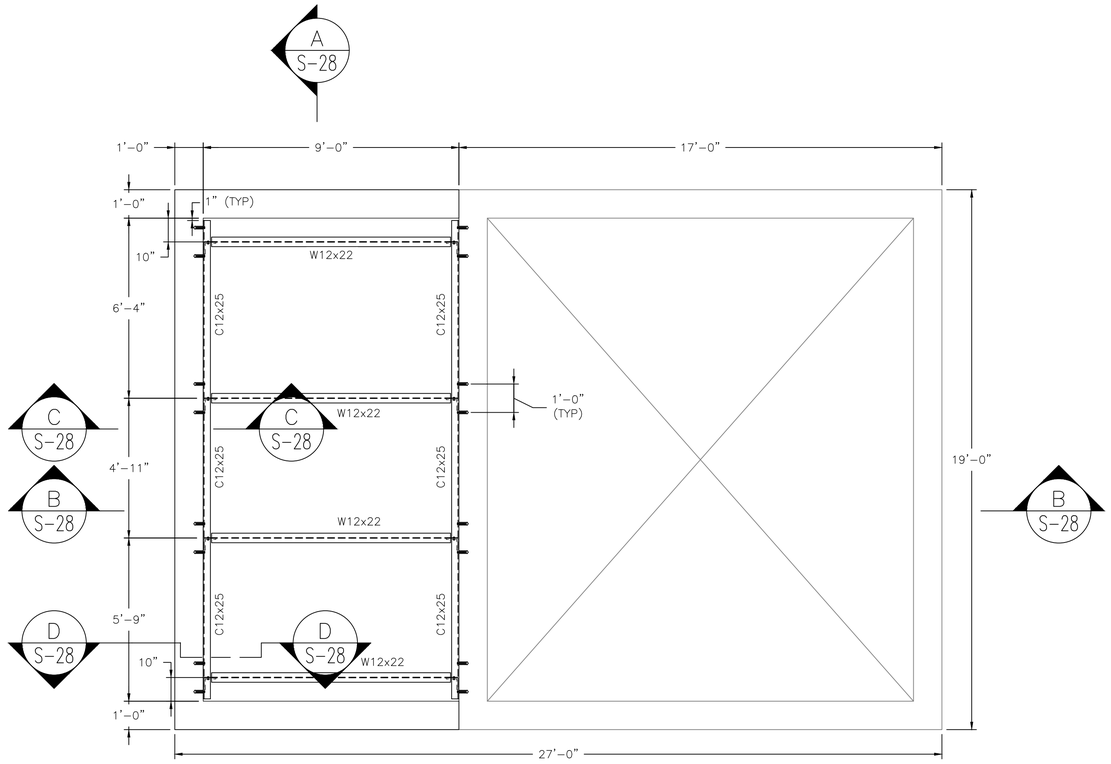

PLAN VIEW @ EL 74.45

0 2' 4' 6'

SCALE: 3/8"=1'-0"

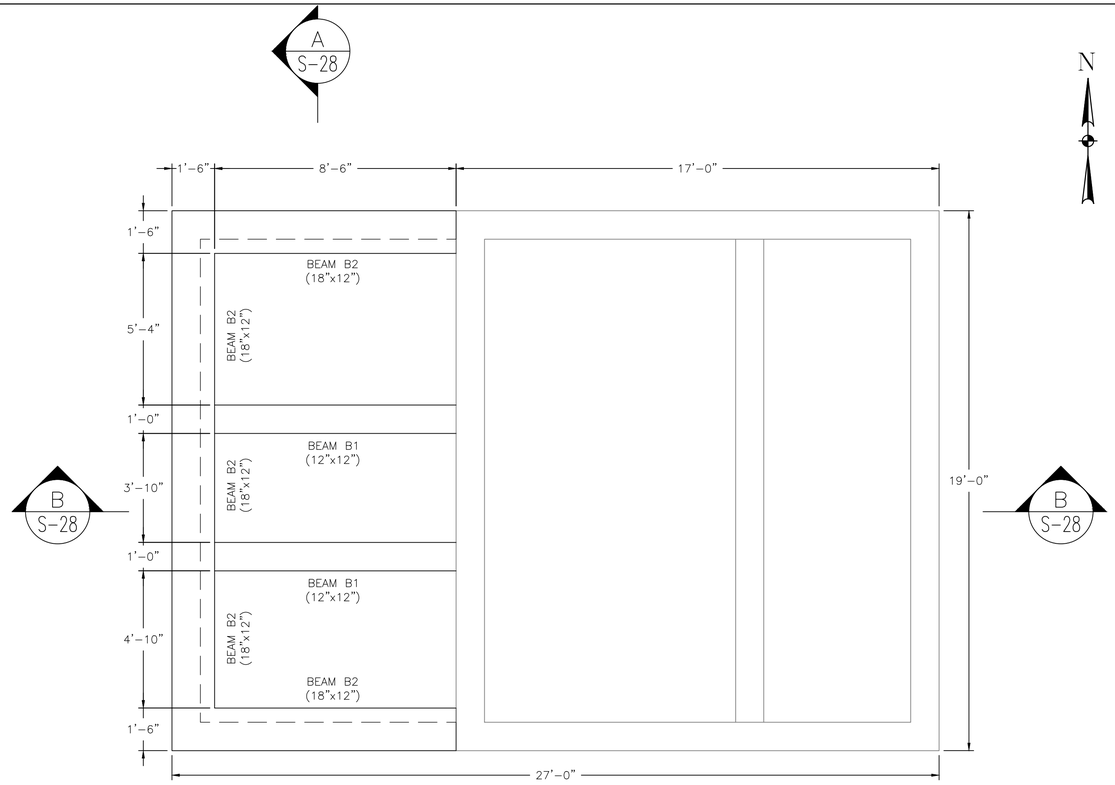

PLAN VIEW @ EL 81.45

0 2' 4' 6'

SCALE: 3/8"=1'-0"

NO. | DATE | REVISION | APP.

NOTE:

1. ALL STEEL SECTIONS, CONNECTIONS AND ANCHORS ARE SS316 UON

ARCADIS
Infrastructure · Water · Environment · Buildings
1330 Post Oak Blvd, Suite 2250
Houston, TX 77056
Tel: 713-953-4800
Fax: 713-977-4620
www.arcadis.com
Texas Registered Engineering Firm F-533

SURVEYED BY: AMANI ENGR.

FB NO. P-6335

STATE OF TEXAS
TANVIR HOSSAIN
121767
LICENSED PROFESSIONAL ENGINEER

CITY OF HOUSTON

HOUSTON PUBLIC WORKS

LIFT STATION REHABILITATION & RECONSTRUCTION
CONSENT DECREE

EMNORA # 2 LIFT STATION
WET WELL
INTERMEDIATE PLANS

S-27

WBS NUMBER	FOR CITY OF HOUSTON USE ONLY
R-000267-0175-4	
DRAWING SCALE	
AS NOTED	
CITY OF HOUSTON PM	
NP NAWARAJ PANTA, P.E.	
SHEET NO. 210 OF 312	

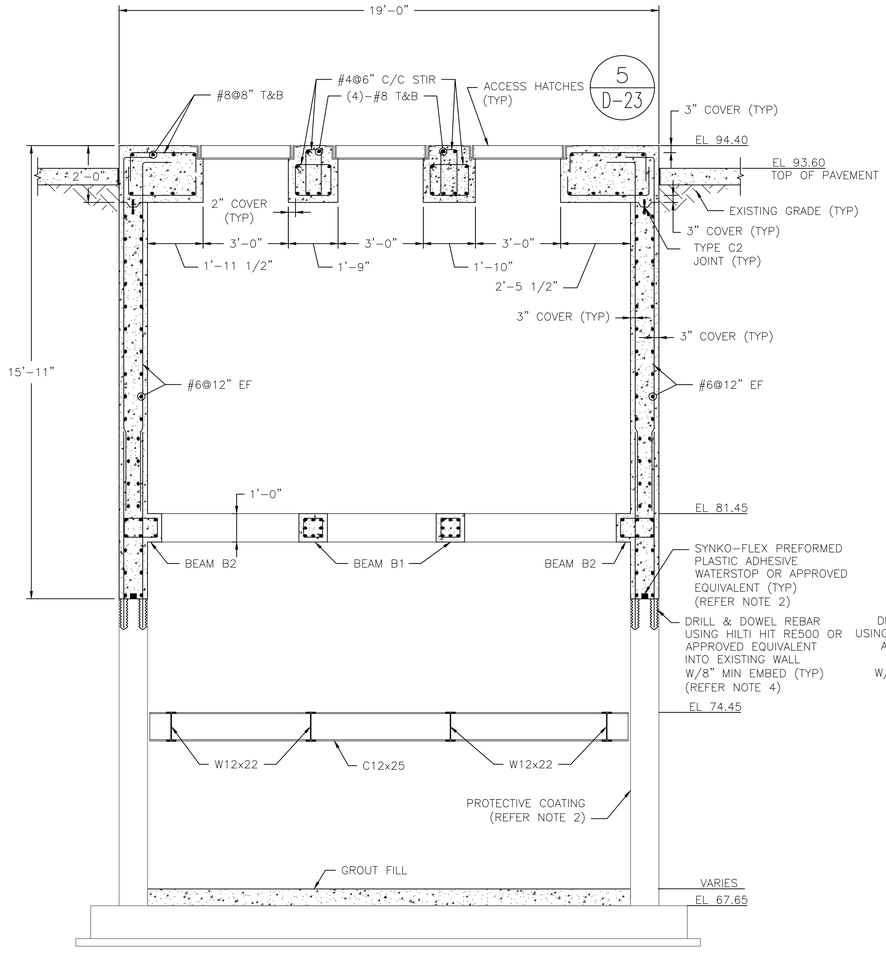

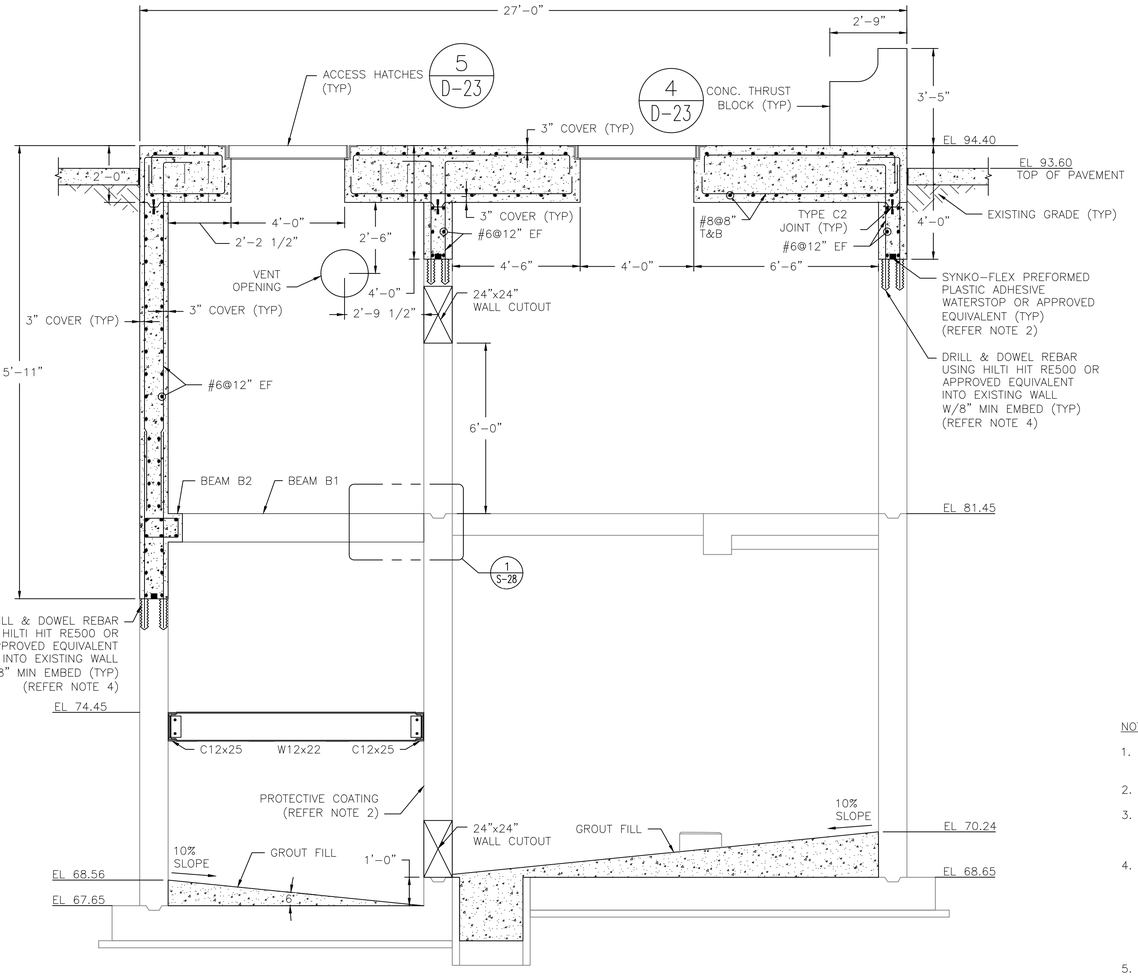

NO.	DATE	REVISION	APP.

NOTES:

1. ALL STEEL SECTIONS, CONNECTIONS AND ANCHORS ARE SS316 UON
2. FOR WATERSTOP REFER TO COH SPEC. 03151.
3. PROVIDE PROTECTIVE COATING ON ALL INTERIOR CONCRETE SURFACE OF THE WET WELL. REFER TO COH PROTECTIVE COATINGS SPEC. 09901, SYSTEM 108.
4. PRIOR TO DRILLING, LOCATE EXISTING REINFORCING STEEL IN VICINITY OF PROPOSED HOLES USING NON-DESTRUCTIVE METHODS. IF REINFORCING CONFLICTS WITH PROPOSED HOLE LOCATION, OBTAIN ENGINEER'S APPROVAL OF ALTERNATE HOLE LOCATIONS TO AVOID DRILLING THROUGH OR DAMAGING EXISTING REINFORCING BARS.
5. ALL WELD SIZES ARE 1/4" UON.
6. CONTRACTOR TO PROVIDE DETAIL DRAWINGS INCLUDING CONNECTION DETAILS DURING SHOP DRAWING SUBMISSION.

A SECTION
SCALE: 3/8"=1'-0"

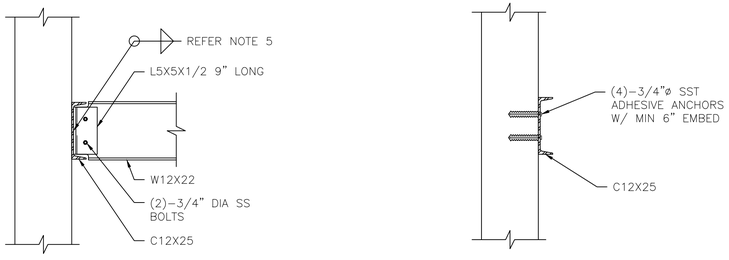

C SECTION
SCALE: 3/4"=1'-0"

D SECTION
SCALE: 3/4"=1'-0"

B SECTION
SCALE: 3/8"=1'-0"

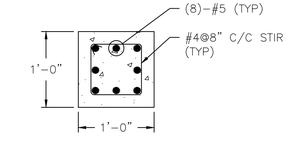

BEAM B1
SCALE: 1"=1'-0"

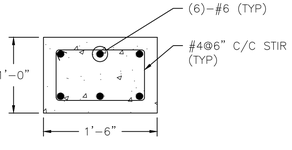

BEAM B2
SCALE: 1"=1'-0"

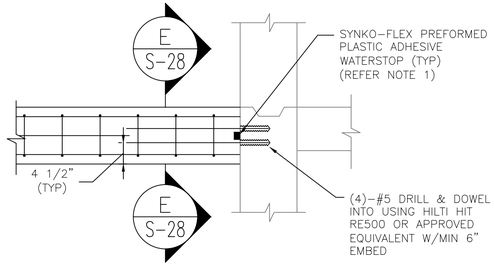

1 DETAIL
SCALE: 3/4"=1'-0"

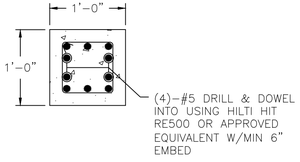

E SECTION
SCALE: 1"=1'-0"

ARCADIS
Infrastructure · Water · Environment · Buildings
1330 Post Oak Blvd, Suite 2250
Houston, TX 77056
Tel: 713-953-4800
Fax: 713-977-4620
www.arcadis.com
Texas Registered Engineering Firm F-533

SURVEYED BY: AMANI ENGR.
FB NO. P-6335

STATE OF TEXAS
TANVIR HOSSAIN
121767
LICENSED PROFESSIONAL ENGINEER

CITY OF HOUSTON
HOUSTON PUBLIC WORKS

LIFT STATION REHABILITATION & RECONSTRUCTION CONSENT DECREE

EMNORA # 2 LIFT STATION WET WELL SECTIONS & DETAILS

S-28

WBS NUMBER	FOR CITY OF HOUSTON USE ONLY
R-000267-0175-4	
DRAWING SCALE	
AS NOTED	
CITY OF HOUSTON PM	
NP NAWARAJ PANTA, P.E.	
SHEET NO. 211 OF 312	

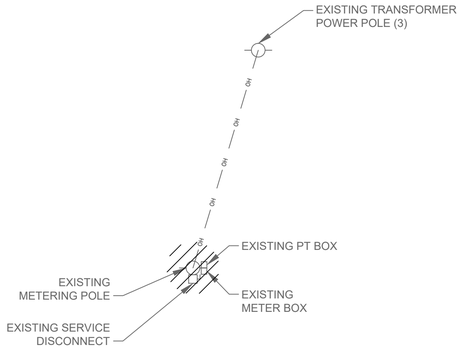

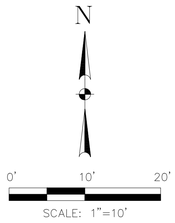

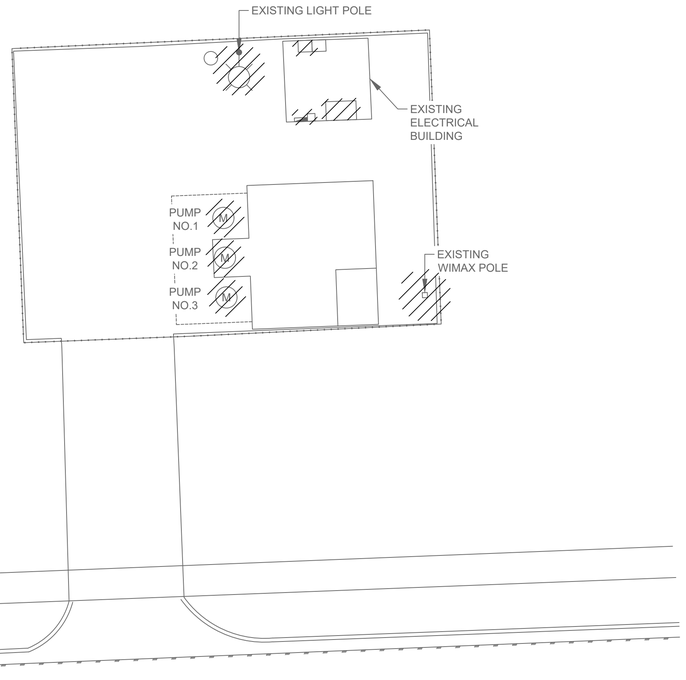

EMNORA NO.2 ELECTRICAL
DEMOLITION SITE

PLAN

1"= 10'-0"

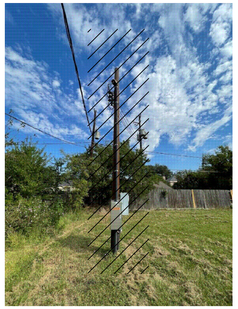

EXISTING MEETERING
POLE

PHOTOGRAPH A - / NTS — 1

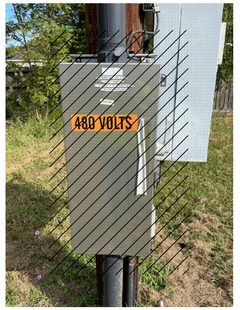

EXISTING SERIVICE
DISCONNECT SWITCH

PHOTOGRAPH B - / NTS — 1

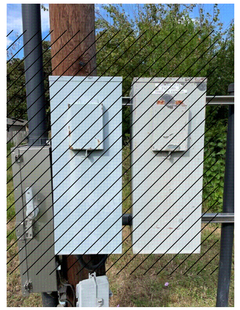

EXISTING MEETERING
AND PT BOX

PHOTOGRAPH C - / NTS — 1

EXISTING LIGHT
POLE

PHOTOGRAPH D - / NTS — 2

EXISTING WIMAX
POLE

PHOTOGRAPH E - / NTS — 3

EXISTING MCC
(IN ELECTRICAL BUILDING)

PHOTOGRAPH F - / NTS — 4

EXISTING CONTROL PANEL
(IN ELECTRICAL BUILDING)

PHOTOGRAPH G - / NTS — 5

EXISTING LIGHTING PANEL & XFMR
(IN ELECTRICAL BUILDING)

PHOTOGRAPH H - / NTS — 6

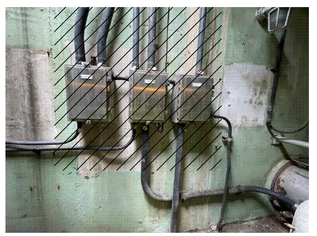

EXISTING PUMP J-BOX
(IN DRY PIT)

PHOTOGRAPH I - / NTS — 7

NOTES BY SYMBOL "⟨#⟩":

1. EXISTING ELECTRICAL SERVICE POLE, SERVICE RACK, METER, PT BOX AND MAIN DISCONNECT SWITCH TO BE DEMOLISHED AND REMOVED.
2. EXISTING SITE LIGHTING INCLUDING POLE FIXTURES, CONDUITS AND WIRES TO BE DEMOLISHED AND REMOVED
3. EXISTING WIMAX POLE, CONDUITS AND WIRES TO BE DEMOLISHED AND REMOVED.
4. EXISTING MCC, ASSOCIATED CONDUITS AND WIRES IN ELECTRICAL BUILDING TO BE DEMOLISHED AND REMOVED.
5. EXISTING CONTROL PANEL, ASSOCIATED CONDUITS AND WIRES IN ELECTRICAL BUILDING TO BE DEMOLISHED AND REMOVED.
6. EXISTING TRANSFORMER, LIGHTING PANEL, ASSOCIATED CONDUITS AND WIRES IN ELECTRICAL BUILDING TO BE DEMOLISHED AND REMOVED.
7. EXISTING ELECTRICAL EQUIPMENT AND DEVICE (PUMP J-BOXES) IN LIFT STATION DRY PIT TO BE DEMOLISHED AND REMOVED.

LEGEND:

ITEMS TO BE DEMOLISHED.

GAI
Gupta & Associates, Inc.
CONSULTING ENGINEERING
Registration No. F-2593
302 Dennis St.
Houston, Texas 77006
Tel: 713-636-2936
Fax: 713-636-2987
email: hforouzan@gaiconsulting.com

ARCADIS
Infrastructure · Water · Environment · Buildings
1330 Post Oak Blvd, Suite 2250
Houston, TX 77056
Tel: 713-953-4800
Fax: 713-977-4620
www.arcadis.com
Texas Registered Engineering Firm F-533

SURVEYED BY: AMANI ENGR.
FB NO. P-6335

STATE OF TEXAS · H. A. FOROUZAN · 77748 · REGISTERED PROFESSIONAL ENGINEER

11/18/2025

CITY OF HOUSTON
HOUSTON PUBLIC WORKS

LIFT STATION REHABILITATION & RECONSTRUCTION
CONSENT DECREE

EMNORA #2 LIFT STATION ELECTRICAL DEMOLITION SITE PLAN

E-49

WBS NUMBER	FOR CITY OF HOUSTON USE ONLY
R-000267-0175-4	
DRAWING SCALE	
1" = 10'-0"	
CITY OF HOUSTON PM	
NP NAWARAJ PANTA, P.E.	
SHEET NO. 212 OF 312	

FILE PATH: O:\H8103_Houston Lift Station Removal And Replacement (CMAR)\6 Drawings\Electrical\Working\Emnora #2\Emnora #2_E-01.dwg
PLOT STYLE: COH.ctb PLOTTED: 11/18/2025 5:57 PM

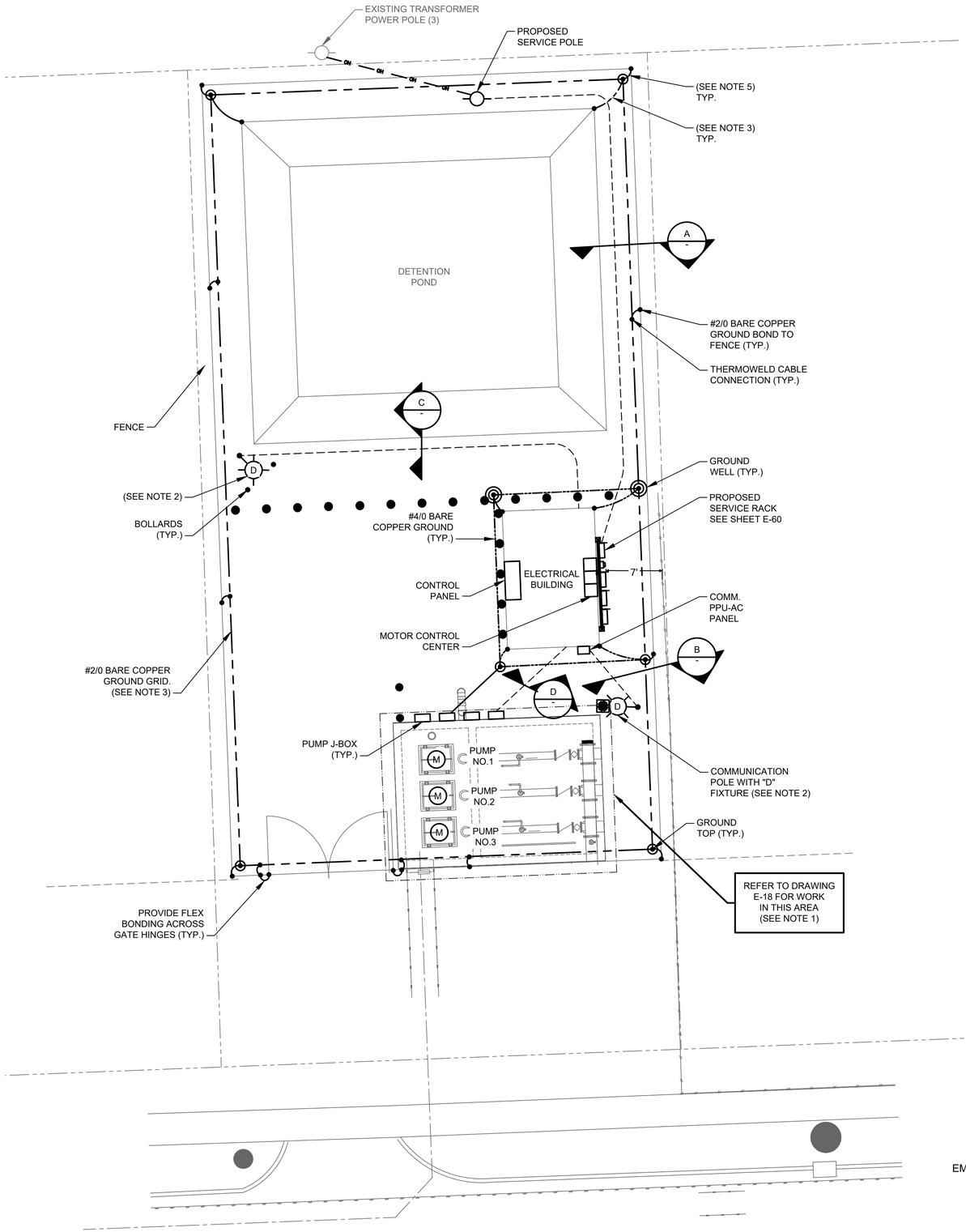

EMNORA NO.2 ELECTRICAL PROPOSED SITE

PLAN

1" = 8'-0"

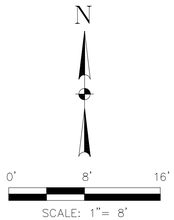

NOTES:

1. THE ELECTRICAL INSTALLATION IN THE WET WELL SHALL BE EXPLOSION PROOF, IN ACCORDANCE WITH THE NATIONAL ELECTRICAL CODE FOR CLASS I, DIVISION 1 LOCATIONS.
2. YARD LIGHT CONTROLLED BY LIGHTING SWITCH.
3. #2/0 BARE COPPER GROUND TO BE BONDED TO GUARD RAIL OF DETENTION POND AS REQUIRED.
4. INSIDE WETWELL RATED NEMA CLASS 1, DIV. 1. OUTSIDE ABOVE GROUND, AROUND WETWELL RATED CLASS 1, DIV. 2 ACCORDING TO NFPA 820.
5. #2/0 BARE COPPER GROUND TO BE BONDED TO FENCE POST.

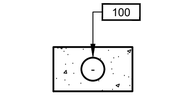

DUCTBANK SECTION A NTS

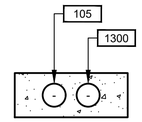

DUCTBANK SECTION B NTS

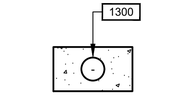

DUCTBANK SECTION C NTS

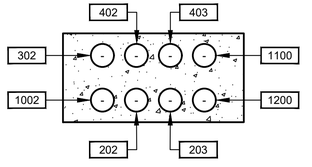

DUCTBANK SECTION D NTS

GAI
Gupta & Associates, Inc.
CONSULTING ENGINEERING
Registration No. F-2593
302 Dennis St.
Houston, Texas 77006
Tel: 713-636-2936
Fax: 713-636-2967
email: hforouzan@gaiconsulting.com

ARCADIS
Infrastructure · Water · Environment · Buildings
1330 Post Oak Blvd, Suite 2250
Houston, TX 77056
Tel: 713-953-4800
Fax: 713-977-4620
www.arcadis.com
Texas Registered Engineering Firm F-533

SURVEYED BY: AMANI ENGR.
FB NO. P-6335

STATE OF TEXAS · H. A. FOROUZAN · 77748 · REGISTERED PROFESSIONAL ENGINEER

11/18/2025

CITY OF HOUSTON

HOUSTON PUBLIC WORKS

LIFT STATION REHABILITATION & RECONSTRUCTION CONSENT DECREE

EMNORA #2 LIFT STATION ELECTRICAL PROPOSED SITE PLAN

E-50

WBS NUMBER	FOR CITY OF HOUSTON USE ONLY
R-000267-0175-4	
DRAWING SCALE	
1" = 8'-0"	
CITY OF HOUSTON PM	
NP NAWARAJ PANTA, P.E.	
SHEET NO. 213 OF 312	

NO.	DATE	REVISION	APP.

FILE PATH: O:\H8103_Houston Lift Station Removal And Replacement (CMAR)\6 Drawings\Electrical\Working\Emnora #2\Emnora #2_E-02.dwg
PLOT STYLE: GAI.ctb PLOTTED: 11/18/2025 5:53 PM

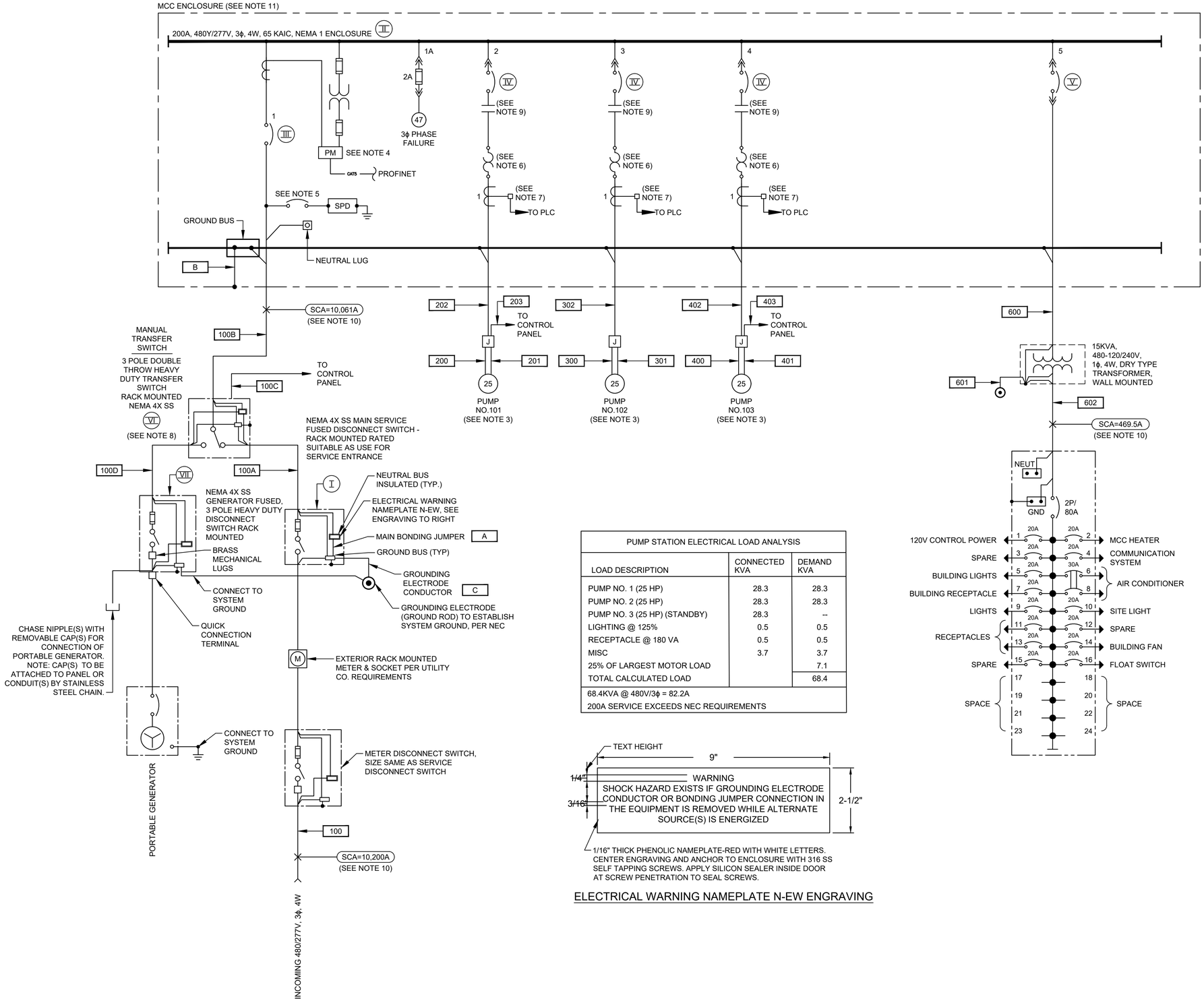

PUMP STATION ELECTRICAL LOAD ANALYSIS		
LOAD DESCRIPTION	CONNECTED KVA	DEMAND KVA
PUMP NO. 1 (25 HP)	28.3	28.3
PUMP NO. 2 (25 HP)	28.3	28.3
PUMP NO. 3 (25 HP) (STANDBY)	28.3	--
LIGHTING @ 125%	0.5	0.5
RECEPTACLE @ 180 VA	0.5	0.5
MISC	3.7	3.7
25% OF LARGEST MOTOR LOAD		7.1
TOTAL CALCULATED LOAD		68.4
68.4KVA @ 480V/3ϕ = 82.2A		
200A SERVICE EXCEEDS NEC REQUIREMENTS		

ELECTRICAL WARNING NAMEPLATE N-EW ENGRAVING

NOTES:

1. FOR DESCRIPTION AND RATINGS OF ITEMS INDICATED WITH ROMAN NUMERAL FLAGS, SEE DEVICE RATINGS SCHEDULE.
2. CONTRACTOR SHALL VERIFY ACTUAL AMPERAGES OF MOTORS AND SIZE STARTERS, MOTOR CIRCUIT PROTECTORS, ETC. ACCORDINGLY.
3. REFER TO INSTRUMENTATION DRAWINGS I-57, I-58, I-59, FOR PUMP CONTROL SCHEMATIC DIAGRAM.
4. POWER MONITOR.
5. PROVIDE BREAKER ACCORDING TO MANUFACTURER'S REQUIREMENTS.
6. COMBINATION OF CT AND OVERLOAD RELAY AS REQUIRED. WHERE APPLICABLE.
7. PROVIDE 5A PRIMARY TO 4-20mA CURRENT TRANSDUCER.
8. PROVIDE A NORMALLY OPEN (NO) AUXILIARY CONTACT FOR BOTH ON POSITIONS.
9. STARTER NEMA SIZE 2 IS MINIMUM AND NEMA SIZE 3 OR GREATER SHALL BE VACUUM TYPE.
10. POINT TO POINT METHOD IS USED FOR SHORT CIRCUIT CURRENT CALCULATION.
11. CONTRACTOR SHALL PROVIDE A PERMANENTLY AFFIXED LABEL (2" X 3") SHOWING THE AVAILABLE FAULT CURRENT AND CALCULATION DATE. THE LABEL SHALL BE BLUE LETTERING ON A CONTRASTING BACKGROUND.
12. THE INSULATION TYPES OF ALL ELECTRICAL CONDUCTORS USED IN THE PROJECT HAVE BEEN SPECIFIED IN ELECTRICAL SPECIFICATIONS (16120, 16121, AND 16122). THE TYPES OF CONDUITS USED IN THE PROJECT HAS BEEN SPECIFIED IN ELECTRICAL SPECIFICATIONS 16111.

NO.	DATE	REVISION	APP.

GAI
Gupta & Associates, Inc.
CONSULTING ENGINEERING
Registration No. F-2593
302 Dennis St., Houston, Texas 77006
Tel: 713-636-2936
Fax: 713-636-2987
email: hforouzan@gaiconsulting.com

ARCADIS
Infrastructure · Water · Environment · Buildings
1330 Post Oak Blvd, Suite 2250
Houston, TX 77056
Tel: 713-953-4800
Fax: 713-977-4620
www.arcadis.com
Texas Registered Engineering Firm F-533

SURVEYED BY: AMANI ENGR.
FB NO. P-6335

STATE OF TEXAS
H. A. FOROUZAN
77748
REGISTERED PROFESSIONAL ENGINEER
11/18/2025

CITY OF HOUSTON
HOUSTON PUBLIC WORKS

LIFT STATION REHABILITATION & RECONSTRUCTION CONSENT DECREE

EMNORA #2 LIFT STATION ELECTRICAL SINGLE LINE DIAGRAM
E-51

WBS NUMBER	FOR CITY OF HOUSTON USE ONLY
R-000267-0175-4	
DRAWING SCALE	
NONE	
CITY OF HOUSTON PM	
NP NAWARAJ PANTA, P.E.	
SHEET NO. 214 OF 312	

FILE PATH: O:\H8103_Houston Lift Station Removal And Replacement (CMAR)\6 Drawings\Electrical\Working\Emnora #2\Emnora #2_E-03.dwg
PLOT STYLE: GAI.ctb PLOTTED: 11/18/2025 5:53 PM

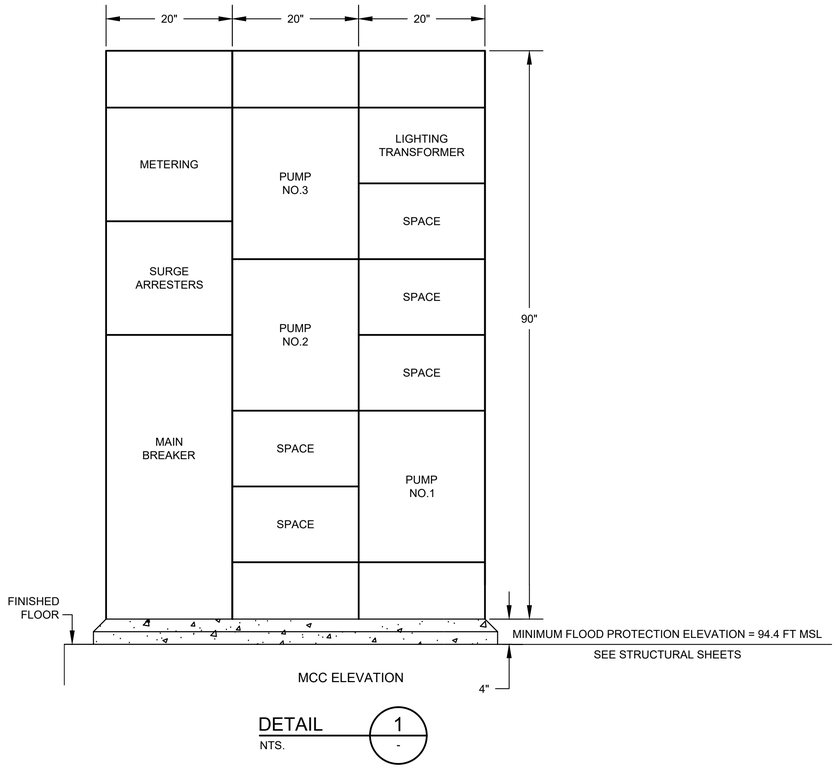

DETAIL 1
NTS. -

ITEM	CIRCUIT	DESCRIPTION	RATINGS FOR PUMP SIZES INDICATED
I	--	MAIN DISCONNECT SWITCH	
		OPERATING VOLTAGE	480V
		CURRENT RATING	200A
		CURRENT LIMITING	CLASS L
		FUSES TYPE & SIZE	200A
II	--	MOTOR CONTROL CENTER MAIN BUS - 3/C COPPER	
		OPERATING VOLTAGE	480V
		CURRENT RATING	200A
		CURRENT LIMITING	200A LUG
		BUS BRACING	65KA SYM
III	1	MAIN BREAKER	
		3 POLE - TYPE	MOLDED CASE
		MOUNTING	FIXED
		OPERATING VOLTAGE	480V
		FRAME SIZE	225A
		TRIP SETTING	200A
		INTERRUPT CAPACITY	65KA SYM
		OPTIONS	NONE
IV	2 3 4	PUMP MOTOR STARTERS	
		QUANTITY	3
		MOUNTING	FIXED
		SHORT CIRCUIT PROTECTION	
		3 POLE - TYPE	MCP
		OPERATING VOLTAGE	480V
		FRAME SIZE	70A
		TRIP SETTING	FIELD ADJ
		INTERRUPT CAPACITY	65KA SYM
		MOTOR STARTING CONTACTOR	
		3 POLE - TYPE	VACUUM
		OPERATING VOLTAGE	480V
		SIZE	NEMA 2
		OVERLOAD PROTECTION TYPE	SOLID STATE MOR
		CT RATIO	50:5
V	5	LIGHTING TRANSFORMER FEEDER BREAKER	
		NO. OF POLES	2
		TYPE	MOLDED CASE
		OPERATING VOLTAGE	480V
		FRAME SIZE	100A
		TRIP SETTING	40A
		INTERRUPT CAPACITY	65KA SYM
VI	--	MANUAL TRANSFER SWITCH	3P, 4W SN
		OPERATING VOLTAGE	600V
		CURRENT RATING	200A
VII	--	GENERATOR FUSED DISCONNECT SWITCH	3P, 4W SN
		OPERATING VOLTAGE	480V
		CURRENT RATING	200A
		CURRENT LIMITING	CLASS L
		FUSES TYPE & SIZE	200A

NO.	DATE	REVISION	APP.

GAI
Gupta & Associates, Inc.
CONSULTING ENGINEERING
Registration No. F-2593
302 Dennis St.,
Houston, Texas 77006
Tel: 713-636-2936
Fax: 713-636-2967
email: hforouzan@gaiconsulting.com

ARCADIS
Infrastructure · Water · Environment · Buildings
1330 Post Oak Blvd, Suite 2250
Houston, TX 77056
Tel: 713-953-4800
Fax: 713-977-4620
www.arcadis.com
Texas Registered Engineering Firm F-533

SURVEYED BY: AMANI ENGR.
FB NO. P-6335

STATE OF TEXAS
H. A. FOROUZAN
77748
REGISTERED
PROFESSIONAL ENGINEER
11/18/2025

CITY OF HOUSTON
HOUSTON PUBLIC WORKS

LIFT STATION REHABILITATION & RECONSTRUCTION
CONSENT DECREE

EMNORA #2 LIFT STATION MCC ELEVATION & DEVICE RATING SCHEDULE

E-52

WBS NUMBER	FOR CITY OF HOUSTON USE ONLY
R-000267-0175-4	
DRAWING SCALE	
AS SHOWN	
CITY OF HOUSTON PM	
NP NAWARAJ PANTA, P.E.	
SHEET NO. 215 OF 312	

FILE PATH: O:\H8103_Houston Lift Station Removal And Replacement (CMAR)\5 Construction Phase\Addenda\Addendum No.1\Emnora No.2\Emnora #2_E-04.dwg
PLOT STYLE: GAI.ctb PLOTTED: 1/14/2026 3:11 PM

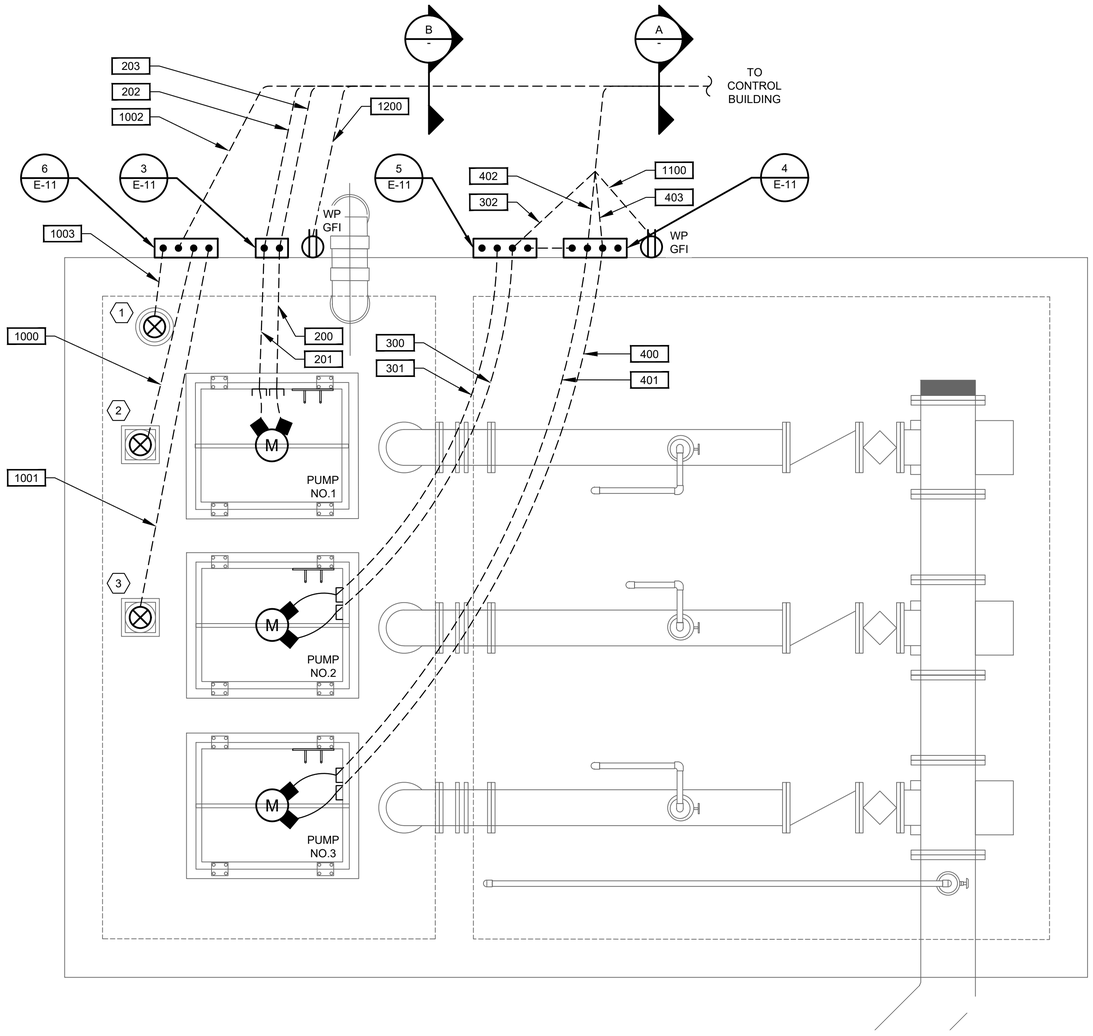

EMNORA #2 LIFT STATION
ENLARGED PLAN

PLAN

1/2"=1'-0"

NOTES BY SYMBOL "#":

1. FLOAT SWITCH.
2. LEVEL TRANSMITTER LT-1.
3. LEVEL TRANSMITTER LT-2.

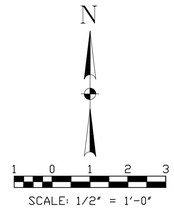

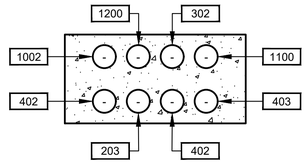

DUCTBANK

SECTION A

NTS

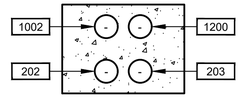

DUCTBANK

SECTION B

NTS

NO.	DATE	REVISION	APP.

GAI
Gupta & Associates, Inc.
CONSULTING ENGINEERING
Registration No. F-2593
302 Dennis St.
Houston, Texas 77006
Tel: 713-636-2936
Fax: 713-636-2987
email: hforouzan@gaiconsulting.com

ARCADIS
Infrastructure · Water · Environment · Buildings
1330 Post Oak Blvd, Suite 2250
Houston, TX 77056
Tel: 713-953-4800
Fax: 713-977-4620
www.arcadis.com
Texas Registered Engineering Firm F-533

STATE OF TEXAS
H. A. FOROUZAN
77748
REGISTERED
PROFESSIONAL ENGINEER
11/18/2025

SURVEYED BY: AMANI ENGR.
FB NO. P-6335

CITY OF HOUSTON

HOUSTON PUBLIC WORKS

LIFT STATION REHABILITATION & RECONSTRUCTION
CONSENT DECREE

EMNORA #2 LIFT STATION
ELECTRICAL ENLARGED PLAN

E-53

WBS NUMBER	FOR CITY OF HOUSTON USE ONLY
R-000267-0175-4	
DRAWING SCALE	
1/2" = 1'-0"	
CITY OF HOUSTON PM	
NP NAWARAJ PANTA, P.E.	
SHEET NO. 216 OF 312	

FILE PATH: O:\H8103_Houston Lift Station Removal And Replacement (CMAR)\6 Drawings\Electrical\Working\Emnora #2\Emnora #2_E-05.dwg
PLOT STYLE: GAI.ctb PLOTTED: 11/18/2025 5:53 PM

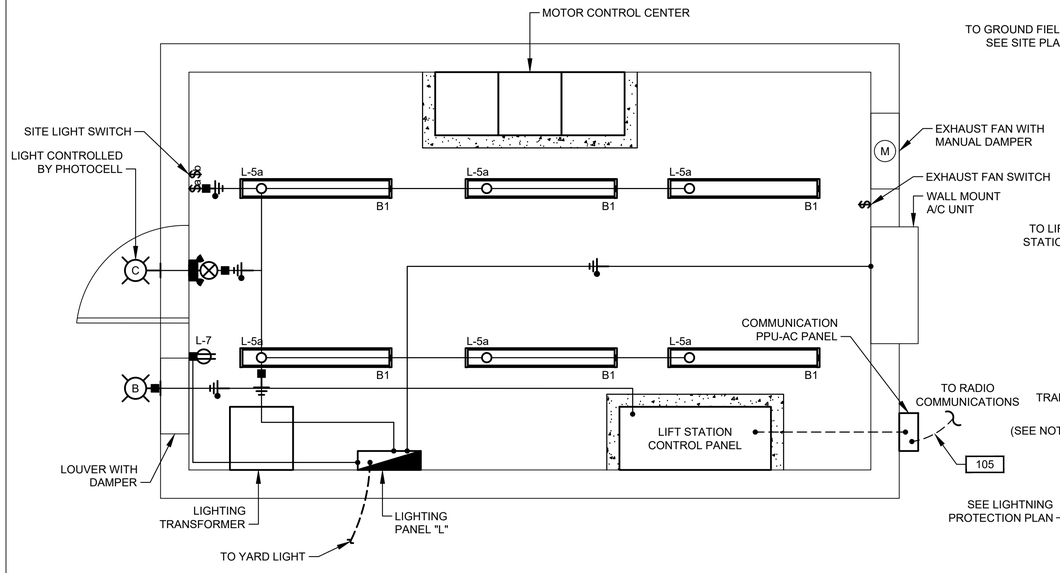

LIGHTING & COMMUNICATION SYSTEM PLAN

1/2"=1'-0"

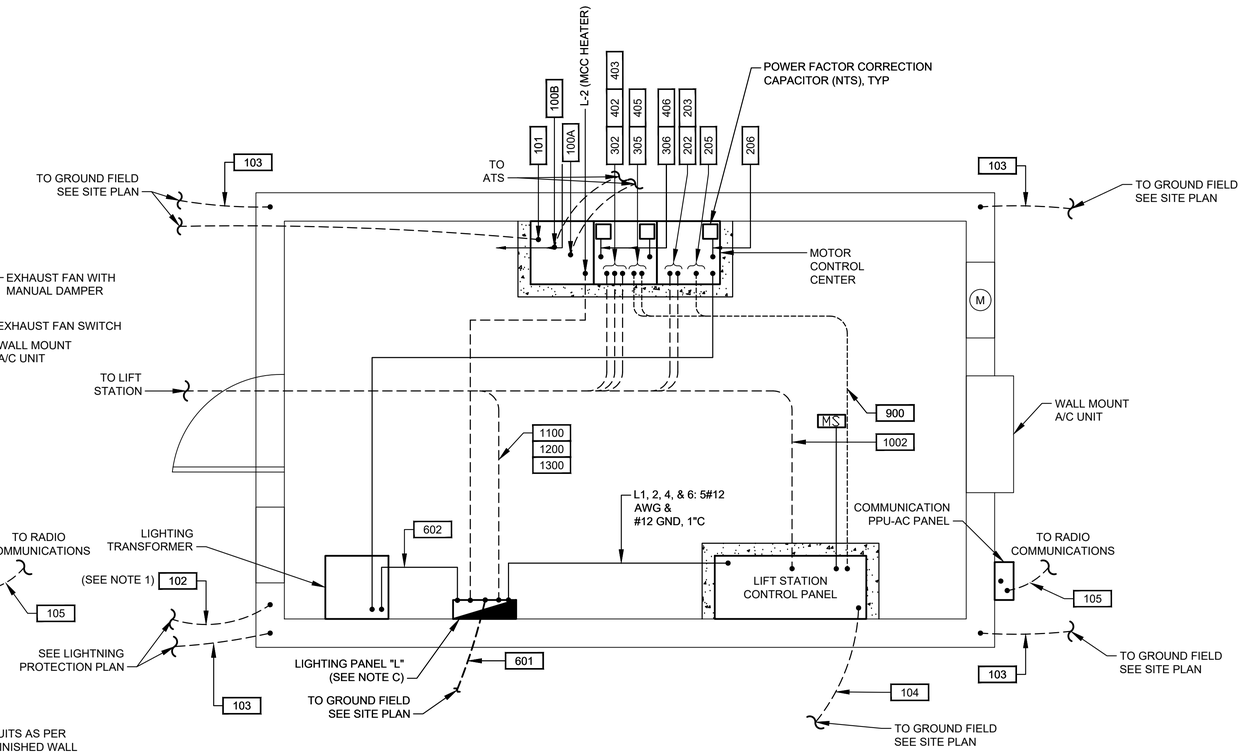

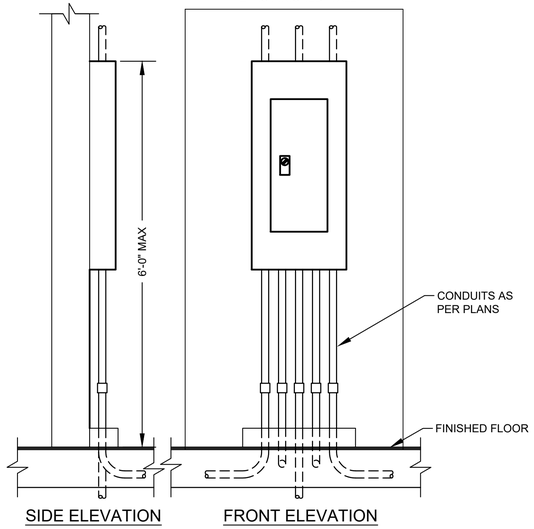

TYPICAL PANEL INSTALLATION

DETAIL 1 / NTS. -

POWER PLAN

1/2"=1'-0"

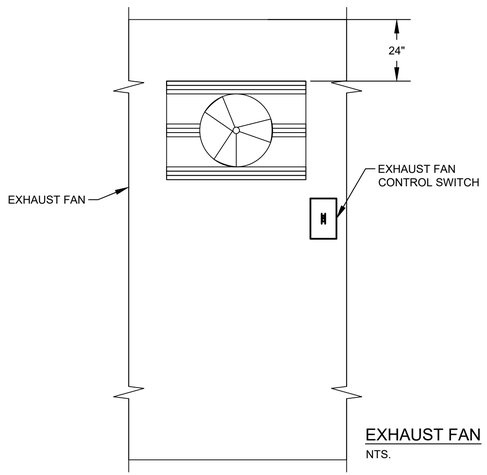

NO.	DATE	REVISION	APP.

GAI
Gupta & Associates, Inc.
CONSULTING ENGINEERING
Registration No. F-2593
302 Dennis St.,
Houston, Texas 77006
Tel: 713-636-2936
Fax: 713-636-2987
email: hforouzan@gaiconsulting.com

ARCADIS
Infrastructure · Water · Environment · Buildings
1330 Post Oak Blvd, Suite 2250
Houston, TX 77056
Tel: 713-953-4800
Fax: 713-977-4620
www.arcadis.com
Texas Registered Engineering Firm F-533

SURVEYED BY: AMANI ENGR.
FB NO. P-6335

STATE OF TEXAS · H. A. FOROUZAN · 77748 · REGISTERED PROFESSIONAL ENGINEER
11/18/2025

CITY OF HOUSTON

HOUSTON PUBLIC WORKS

LIFT STATION REHABILITATION & RECONSTRUCTION CONSENT DECREE

EMNORA #2 LIFT STATION ELECTRICAL BUILDING PLAN

E-54

WBS NUMBER	FOR CITY OF HOUSTON USE ONLY
R-000267-0175-4	
DRAWING SCALE	
AS SHOWN	
CITY OF HOUSTON PM	
NP NAWARAJ PANTA, P.E.	
SHEET NO. 217 OF 312	

FILE PATH: O:\H8103_Houston Lift Station Removal And Replacement (CMAR)\6 Drawings\Electrical\Working\Emnora #2\Emnora #2_E-06.dwg
PLOT STYLE: GAI.ctb PLOTTED: 11/18/2025 5:53 PM

	DESCRIPTION	SERVICE		ROUTING			CONDUIT & WIRE SIZE
		VOLTAGE	AMPS OR HP	FROM	TO	VIA	
A	MAIN BONDING JUMPER	--	--	MAIN FUSED DISCONNECT NEUTRAL	MAIN FUSED DISCONNECT GROUND	--	#2 GND.
B	EQUIPMENT BONDING JUMPER	--	--	MCC/POWER PANEL ENCLOSURE	POWER/CONTROL PANEL & EQUIPMENT	--	#2 GND.
C	GROUNDED ELECTRODE CONDUCTOR	--	--	GROUNDING ELECTRODE	MAIN SERVICE FUSED DISCONNECT GROUNDING	--	#2 GND.
100	SERVICE ENTRANCE	480V	200A	UTILITY POWER SERVICE	METER DISCONNECT		3#3/0 AWG., #2 NEUT., #2 GND., 2-1/2"C.
100A	SERVICE POWER	480V	200A	SERVICE DISCONNECT	MANUAL TRANSFER SWITCH	--	3#3/0 AWG., #2 NEUT., #2 GND., 2-1/2"C.
100B	MCC SERVICE POWER	480V	200A	MANUAL TRANSFER SWITCH	MAIN BREAKER IN MCC	--	3#3/0 AWG., #2 NEUT., #2 GND., 2-1/2"C.
100C	NORMAL/EMERGENCY POWER STATUS	24VDC	--	MANUAL TRANSFER SWITCH	CONTROL PANEL	--	4#14 AWG., 1"C.
100D	EMERGENCY POWER	480V	200A	GENERATOR DISCONNECT	MANUAL TRANSFER SWITCH	--	3#3/0 AWG., #2 NEUT., #2 GND., 2-1/2"C.
101	GROUND ELECTRODE CONDUCTOR	--	--	MCC ENCLOSURE	GROUND FIELD	--	#2 GND.
102	GROUND ELECTRODE CONDUCTOR	--	--	BUILDING STEEL	GROUND FIELD	--	#4/0 GND.
103	BUILDING GROUNDING	--	--	BUILDING REBAR	LIGHTNING GROUND ROD	--	#4/0 GND.
104	GROUND ELECTRODE CONDUCTOR	--	--	CONTROL PANEL	GROUND FIELD	--	#2 GND.
105	COMMUNICATION	--	--	COMMUNICATION POLE	CONTROL PANEL	--	1-1/2"C. CAT-5E
200	PUMP NO. 1 POWER	480V	25 HP	PUMP NO. 1	PUMP NO. 1 JUNCTION BOX	--	MANUFACTURER CABLE IN 2-1/2"C.
201	PUMP NO. 1 CONTROLS	120V	--	PUMP NO. 1	PUMP NO. 1 JUNCTION BOX	--	MANUFACTURER CABLE IN 2-1/2"C.
202	PUMP NO. 1 POWER	480V	25 HP	PUMP NO. 1 JUNCTION BOX	PUMP STARTER	--	3#4, #8 GND., 1-1/2" C.
203	COMBINED PUMP CONTROLS	120V	--	PUMP NO. 1 JUNCTION BOX	PUMP STARTER	--	COMBINE 200 & 300 WIRING, 10#14 AWG., 1"C.
205	PUMP NO. 1 CONTROLS	120V	--	STARTER IN MOTOR CONTROL CENTER	CONTROL PANEL	--	12#14 1"C.
300	PUMP NO. 2 POWER	480V	25 HP	PUMP NO. 2	PUMP NO. 2 JUNCTION BOX	--	MANUFACTURER CABLE IN 2-1/2"C.
301	PUMP NO. 2 CONTROLS	120V	--	PUMP NO. 2	PUMP NO. 2 JUNCTION BOX	--	MANUFACTURER CABLE IN 2-1/2"C.
302	PUMP NO. 2 POWER	480V	25 HP	PUMP NO. 2 JUNCTION BOX	PUMP STARTER	--	3#4 AWG ., #8 GND., 1-1/2" C.
305	PUMP NO. 2 CONTROLS	120V	--	STARTER IN MOTOR CONTROL CENTER	CONTROL PANEL	--	12#14 AWG., 1"C.
400	PUMP NO. 3 POWER	480V	25 HP	PUMP NO. 3	PUMP NO. 3 JUNCTION BOX	--	MANUFACTURER CABLE IN 2-1/2"C.
401	PUMP NO. 3 CONTROLS	120V	--	PUMP NO. 3	PUMP NO. 3 JUNCTION BOX	--	MANUFACTURER CABLE IN 2-1/2"C.
402	PUMP NO. 3 POWER	480V	25 HP	PUMP NO. 3 JUNCTION BOX	PUMP STARTER	--	3#4 AWG., #8 GND., 1-1/2" C.
403	COMBINED PUMP CONTROLS	120V	--	PUMP NO. 3 JUNCTION BOX	CONTROL PANEL	--	5#14 AWG., 3/4"C.
405	PUMP NO. 3 CONTROLS	120V	--	STARTER IN MOTOR CONTROL CENTER	CONTROL PANEL	--	12#14 AWG., 1"C.
600	LIGHTING TRANSFORMER FEEDER	480V	40A	MOTOR CONTROL CENTER	LIGHTING TRANSFORMER	--	2#8 AWG., #6 GND., 1" C.
601	LIGHTING PANEL GROUND	--	--	LIGHTING PANEL	GROUND FIELD	--	#8 GND., 1" C.
602	LIGHTING PANEL FEEDER	120/240V	80A	LIGHTING TRANSFORMER	LIGHTING PANEL	--	3#4 AWG., #8 GND., 1-1/4" C.
900	INTRUSION ALARM	24VDC	--	MOTION SWITCH	CONTROL PANEL	--	2#14 AWG., 1" C.
1000	LEVEL TRANSMITTER	24VDC	--	TRANSMITTER	TRANSMITTER JUNCTION BOX	--	MANUFACTURER CABLE IN 2-1/2"C.
1001	LEVEL TRANSMITTER	24VDC	--	TRANSMITTER	TRANSMITTER JUNCTION BOX	--	MANUFACTURER CABLE IN 2-1/2"C.
1002	COMBINED LEVEL TRANSMITTERS & FLOAT SWITCH	24VDC	--	CONTROL PANEL	TRANSMITTER JUNCTION BOX	--	2 TRIAD #16, 4#14, 2"C.
1003	WELL FLOAT SWITCHES	24VDC	--	TRANSMITTER JUNCTION BOX	FLOAT SWITCH NO.1 & NO.2	--	MANUFACTURER CABLE IN 2-1/2"C.
1100	120VAC FOR RECEPTACLE	--	--	LIGHTING PANEL	RECEPTACLE NEXT TO TRANSMITTER J-BOX	--	2#12 AWG., #12 GND., 1"C.
1200	120VAC FOR RECEPTACLE	--	--	LIGHTING PANEL	RECEPTACLE NEXT TO PUMP NO. 3 J-BOX	--	2#12 AWG., #12 GND., 1"C.
1300	SITE LIGHTING	120V	--	LIGHTING PANEL	SITE LIGHTS	--	2#12, #12G, 1"C.

NOTES:

1. CONDUITS LABELED "FUTURE SPACE" ARE TO BE INSTALLED AND CAPPED IN FIELD.
2. ANY CONDUIT REQUIRING A CSBE SEAL, SHALL BE A MINIMUM SIZE OF 2 1/2".
3. ALL UNDERGROUND CONDUITS (SINGLE AND MULTI-RUN) TO BE ENCASED IN REINFORCED CONCRETE DUCTBANK.

GAI
Gupta & Associates, Inc.
CONSULTING ENGINEERING
Registration No. F-2593
302 Dennis St.,
Houston, Texas 77006
Tel: 713-636-2936
Fax: 713-636-2987
email: hforouzan@gaiconsulting.com

ARCADIS
Infrastructure · Water · Environment · Buildings
1330 Post Oak Blvd, Suite 2250
Houston, TX 77056
Tel: 713-953-4800
Fax: 713-977-4620
www.arcadis.com
Texas Registered Engineering Firm F-533

SURVEYED BY: AMANI ENGR.
FB NO. P-6335

STATE OF TEXAS
H. A. FOROUZAN
77748
REGISTERED
PROFESSIONAL ENGINEER
11/18/2025

CITY OF HOUSTON
HOUSTON PUBLIC WORKS

LIFT STATION REHABILITATION & RECONSTRUCTION
CONSENT DECREE

EMNORA #2 LIFT STATION
ELECTRICAL CONDUIT SCHEDULE

E-55

WBS NUMBER	FOR CITY OF HOUSTON USE ONLY
R-000267-0175-4	
DRAWING SCALE	
NONE	
CITY OF HOUSTON PM	
NP NAWARAJ PANTA, P.E.	
SHEET NO. 218 OF 312	

NO.	DATE	REVISION	APP.

FILE PATH: O:\H8103_Houston Lift Station Removal And Replacement (CMAR)\6 Drawings\Electrical\Working\Emnora #2\Emnora #2_E-07.dwg
PLOT STYLE: GAI.ctb PLOTTED: 11/18/2025 5:53 PM

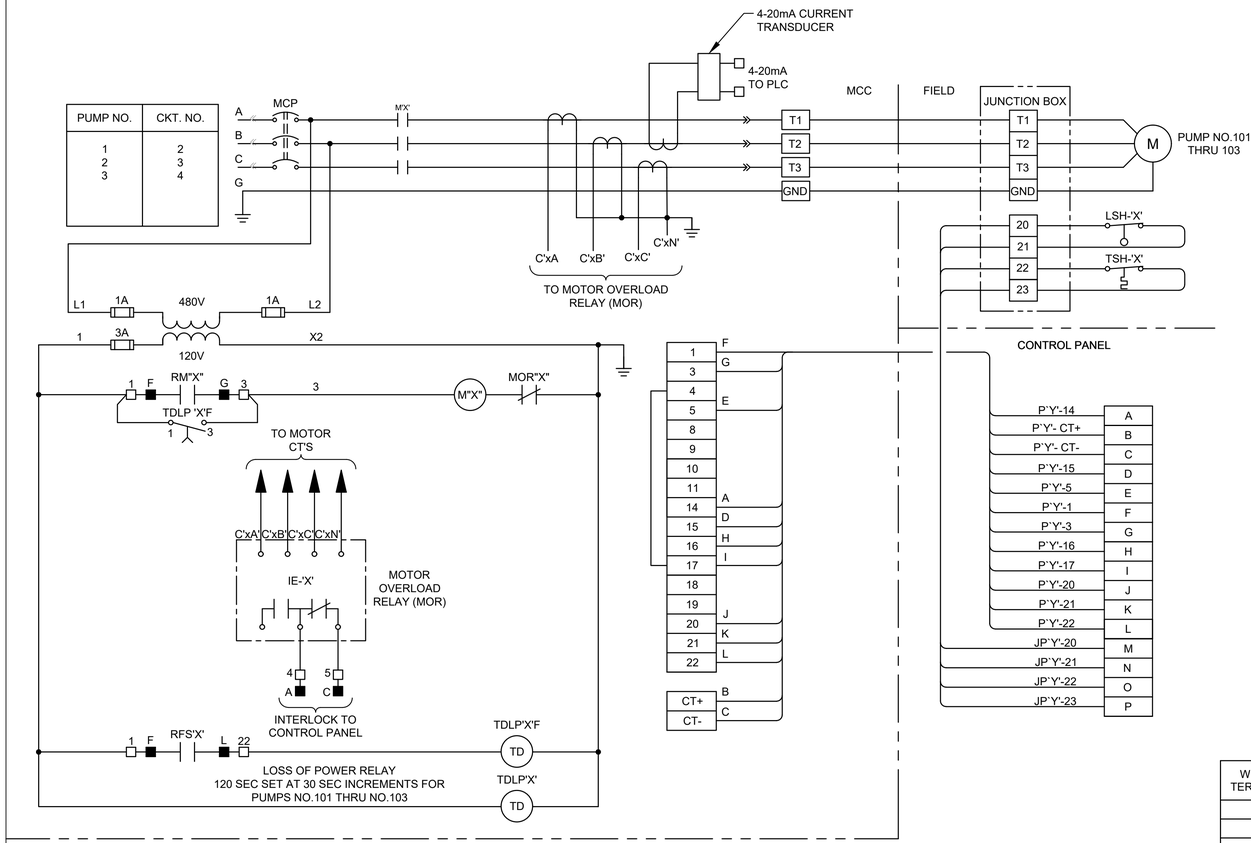

WIRE TAG OR TERMINAL LABEL	PUMP NO.101	PUMP NO.102	PUMP NO.103	FUNCTION
A	3P1	3P2	3P3	24VDC CONTROL
B	124	224	324	4-20mA CURRENT TRANSDUCER
C	125	225	325	4-20mA CURRENT TRANSDUCER
D	112	212	312	M CONTACT
E	117	217	317	PUMP OVERLOAD ALARM
F	109	209	309	RUN INTERLOCK
G	110	210	310	RUN INTERLOCK
H	102	202	302	LOSS OF POWER TIMER
I	103	203	303	LOSS OF POWER TIMER
J	126	226	326	ALARM RESET INTERLOCK
K	127	227	327	ALARM RESET INTERLOCK
L	116	216	316	FLOAT SWITCH RUN INTERLOCK
M	120	220	320	SEAL LEAK DETECTOR
N	121	221	321	SEAL LEAK DETECTOR
O	122	222	322	MOTOR TEMPERATURE SWITCH
P	123	223	323	MOTOR TEMPERATURE SWITCH

LEGEND

- △ DEVICE OR FIELD TERMINAL LOCATED AT MOTOR
- ✳ DEVICE OR FIELD TERMINAL LOCATED REMOTE
- □ DEVICE OR FIELD TERMINAL LOCATED AT POWER PANEL
- ■ FIELD TERMINAL LOCATED AT CONTROL PANEL
- ▲ REMOTE TERMINAL
- ● DEVICE TERMINAL NO.
- ◆ PC INTERFACE TERMINAL

INDOOR MCC SCHEMATIC & WIRING DIAGRAM

SCHEMATIC 1 -

NOTES:

1. THE 'X' NOTATION IN SCHEMATIC DESIGNATIONS REPRESENTS APPLICABLE PUMP NO.101, 102, 103.
2. THE 'Y" NOTATION INDICATES MCC CIRCUIT NUMBER.
3. UNLESS OTHERWISE INDICATED, ALL DEVICES WITHOUT FURTHER DESIGNATION ARE LOCATED AT THE MOTOR CONTROL CENTER (MCC).
4. MOTOR OVERLOAD RELAY OUTPUT CONTACT SHOWN IS NORMALLY CLOSED WHEN RELAY IS DE-ENERGIZED. OPEN WHEN ENERGIZED, AND CLOSED WHEN IN ALARM. (VERIFY OPERATION OF RELAY PROVIDED AND ADJUST CONNECTION OF RMOR AUXILIARY RELAYS.)

NO.	DATE	REVISION	APP.

GAI
Gupta & Associates, Inc.
CONSULTING ENGINEERING
Registration No. F-2593
302 Dennis St.,
Houston, Texas 77006
Tel: 713-636-2936
Fax: 713-636-2987
email: hforouzan@gaiconsulting.com

ARCADIS
Infrastructure · Water · Environment · Buildings
1330 Post Oak Blvd, Suite 2250
Houston, TX 77056
Tel: 713-953-4800
Fax: 713-977-4620
www.arcadis.com
Texas Registered Engineering Firm F-533
SURVEYED BY: AMANI ENGR.
FB NO. P-6335

STATE OF TEXAS
H. A. FOROUZAN
77748
REGISTERED PROFESSIONAL ENGINEER
11/18/2025

CITY OF HOUSTON

HOUSTON PUBLIC WORKS

LIFT STATION REHABILITATION & RECONSTRUCTION CONSENT DECREE

EMNORA #2 LIFT STATION MCC SCHEMATIC & WIRING DIAGRAM

E-56

WBS NUMBER	FOR CITY OF HOUSTON USE ONLY
R-000267-0175-4	
DRAWING SCALE	
NONE	
CITY OF HOUSTON PM	
NP NAWARAJ PANTA, P.E.	
SHEET NO. 219 OF 312	

FILE PATH: O:\H8103_Houston Lift Station Removal And Replacement (CMAR)\6 Drawings\Electrical\Working\Emnora #2\Emnora #2_E-08.dwg
PLOT STYLE: GAI.ctb PLOTTED: 11/18/2025 5:53 PM

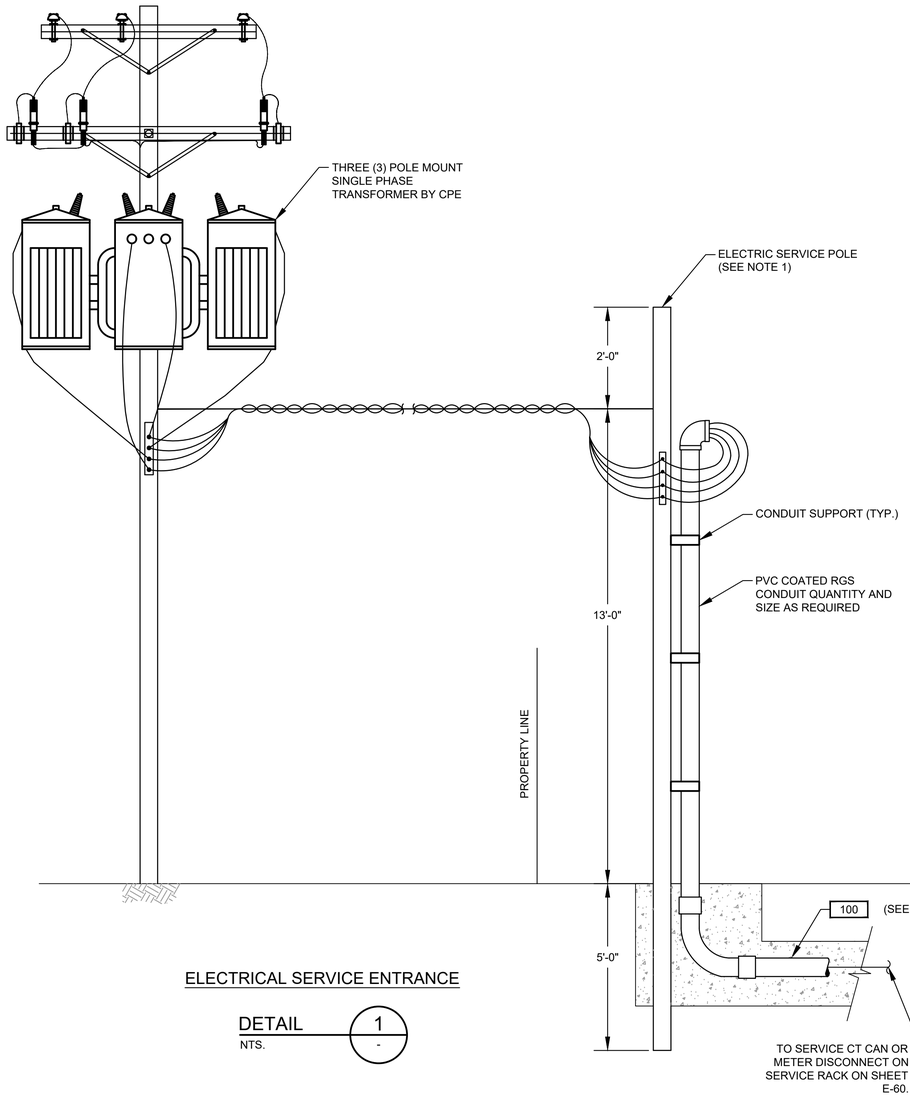

ELECTRICAL SERVICE ENTRANCE

DETAIL 1
NTS. -

NOTES:

1. CONCRETE POLE 20' LONG. TOP DIAMETER 6", BOTTOM DIAMETER 8" PROVIDED AND INSTALLED BY ELECTRICAL CONTRACTOR.
2. ELECTRICAL SERVICE FEEDER PROVIDED AND INSTALLED BY ELECTRICAL CONTRACTOR. COORDINATE WITH CPE FOR THE REQUIREMENTS OF THE INSTALLATION.

NO.	DATE	REVISION	APP.

GAI
Gupta & Associates, Inc.
CONSULTING ENGINEERING
Registration No. F-2593
302 Dennis St.,
Houston, Texas 77006
Tel: 713-636-2936
Fax: 713-636-2987
email: hforouzan@gaiconsulting.com

ARCADIS
Infrastructure · Water · Environment · Buildings
1330 Post Oak Blvd, Suite 2250
Houston, TX 77056
Tel: 713-953-4800
Fax: 713-977-4620
www.arcadis.com
Texas Registered Engineering Firm F-533

SURVEYED BY: AMANI ENGR.
FB NO. P-6335

STATE OF TEXAS
H. A. FOROUZAN
77748
REGISTERED
PROFESSIONAL ENGINEER
11/18/2025

CITY OF HOUSTON

HOUSTON PUBLIC WORKS

LIFT STATION REHABILITATION & RECONSTRUCTION
CONSENT DECREE

EMNORA #2 LIFT STATION ELECTRICAL SERVICE POLE DETAIL

E-57

WBS NUMBER	FOR CITY OF HOUSTON USE ONLY
R-000267-0175-4	
DRAWING SCALE	
AS SHOWN	
CITY OF HOUSTON PM	
NP NAWARAJ PANTA, P.E.	
SHEET NO. 220 OF 312	

FILE PATH: O:\H8103_Houston Lift Station Removal And Replacement (CMAR)\6 Drawings\Electrical\Working\Emnora #2\Emnora #2_E-09.dwg
PLOT STYLE: GAI.ctb PLOTTED: 11/18/2025 5:53 PM

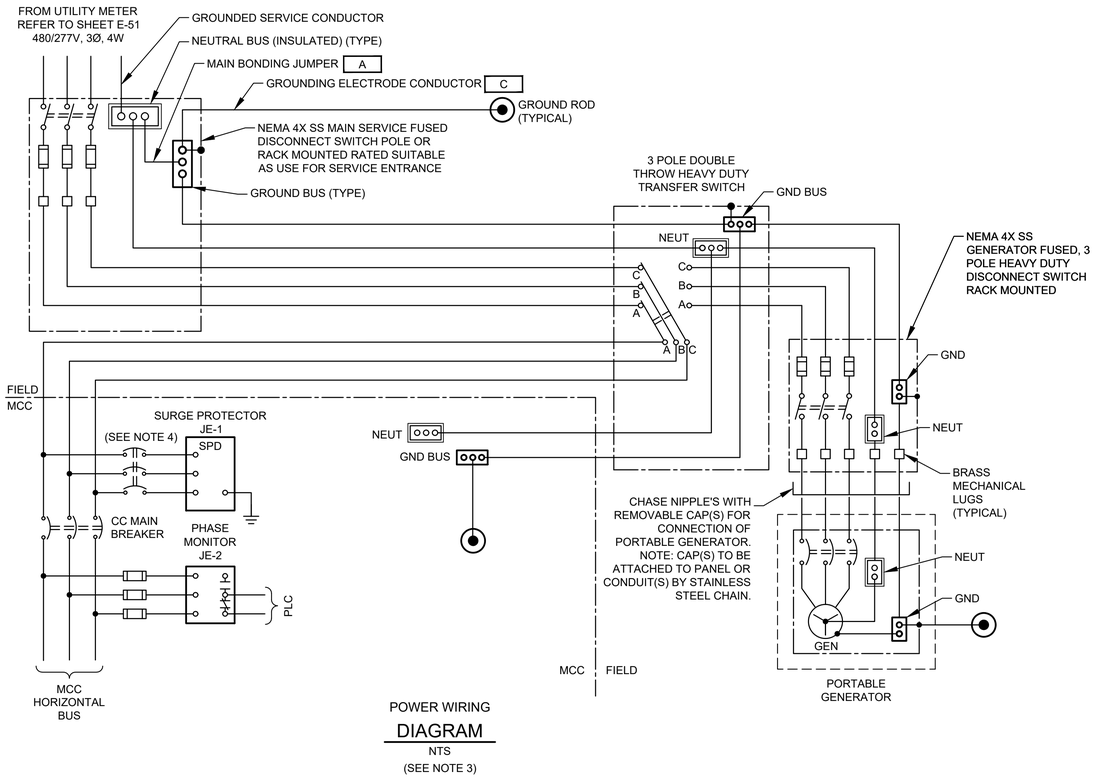

POWER WIRING
DIAGRAM
NTS
(SEE NOTE 3)

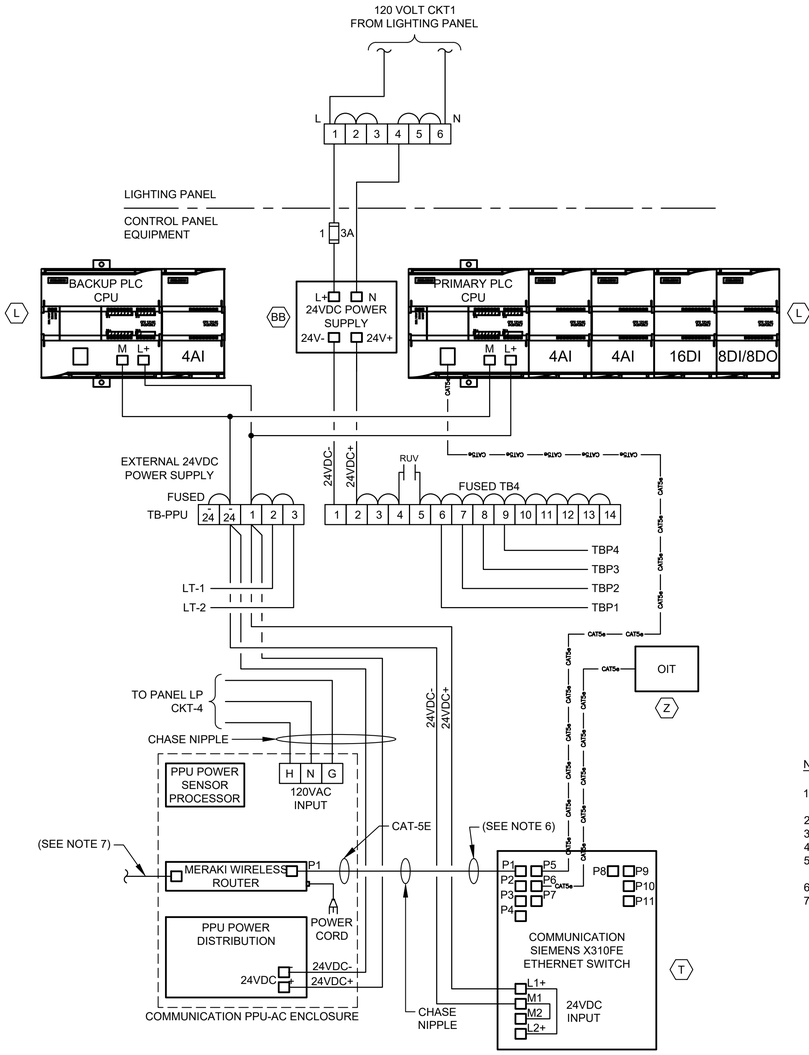

CONTROL POWER & COMMUNICATIONS WIRING
DIAGRAM
NTS
(SEE NOTE 5)

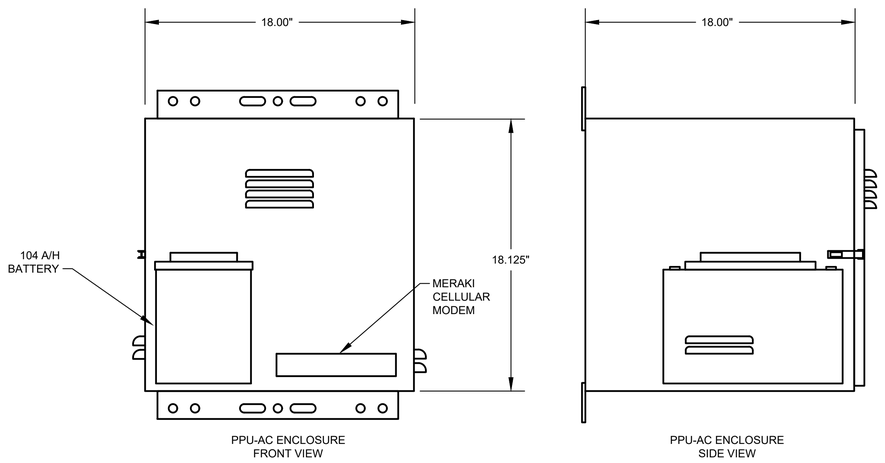

PPU-AC
CONTROL ENCLOSURE
ELEVATION
NTS

NOTES:

1. UNLESS OTHERWISE INDICATED, ALL DEVICES WITHOUT FURTHER DESIGNATION ARE LOCATED AT THE MOTOR CONTROL CENTER (MCC).
2. REFER TO SPEC SECTION 16120 FOR CONDUCTOR COLOR CODE.
3. REFER TO E-51.
4. PROVIDE BREAKER SIZE ACCORDING TO MANUFACTURER'S REQUIREMENTS.
5. COMMUNICATION PPU-AC & SCADA SHALL BE PROVIDED BY CONTRACTOR INCLUDING TO RUN CONDUITS & WIRES.
6. ETHERNET CABLE FOR MERAKI CELLULAR ROUTER (P1).
7. POE CABLE TO RADIO.

NO.	DATE	REVISION	APP.

GAI
Gupta & Associates, Inc.
CONSULTING ENGINEERING
Registration No. F-2593
302 Dennis St.
Houston, Texas 77006
Tel: 713-636-2936
Fax: 713-636-2987
email: hforouzan@gaiconsulting.com

ARCADIS
Infrastructure · Water · Environment · Buildings
1330 Post Oak Blvd, Suite 2250
Houston, TX 77056
Tel: 713-953-4800
Fax: 713-977-4620
www.arcadis.com
Texas Registered Engineering Firm F-533

SURVEYED BY: AMANI ENGR.
FB NO. P-6335

STATE OF TEXAS · H. A. FOROUZAN · 77748 · REGISTERED PROFESSIONAL ENGINEER
11/18/2025

CITY OF HOUSTON
HOUSTON PUBLIC WORKS

LIFT STATION REHABILITATION & RECONSTRUCTION CONSENT DECREE

EMNORA #2 LIFT STATION MCC INCOMING POWER SCHEMATIC & COMM. DIA.
E-58

WBS NUMBER	FOR CITY OF HOUSTON USE ONLY
R-000267-0175-4	
DRAWING SCALE	
AS SHOWN	
CITY OF HOUSTON PM	
NP NAWARAJ PANTA, P.E.	
SHEET NO. 221 OF 312	

FILE PATH: O:\H8103_Houston Lift Station Removal And Replacement (CMAR)\6 Drawings\Electrical\Working\Emnora #2\Emnora #2_E-10.dwg
PLOT STYLE: GAI.ctb PLOTTED: 11/18/2025 5:53 PM

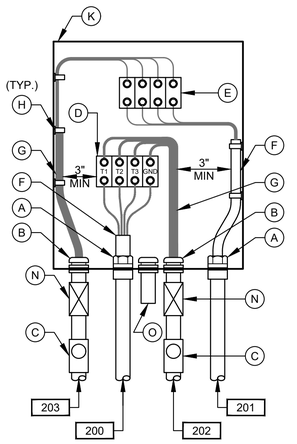

PUMP NO.1
JUNCTION BOX

DETAIL 3
NTS
(SEE NOTE 7)

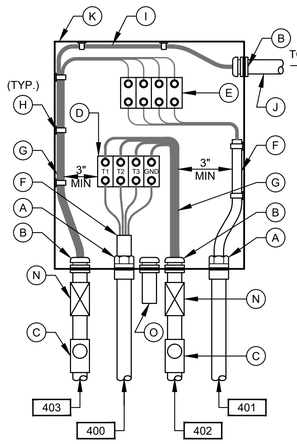

PUMP NO.3
JUNCTION BOX

DETAIL 4
NTS
(SEE NOTE 7)

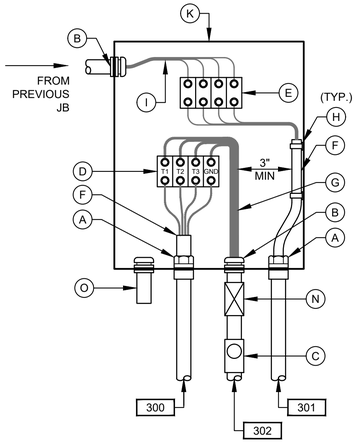

PUMP NO.2
JUNCTION BOX

DETAIL 5
NTS
(SEE NOTE 7)

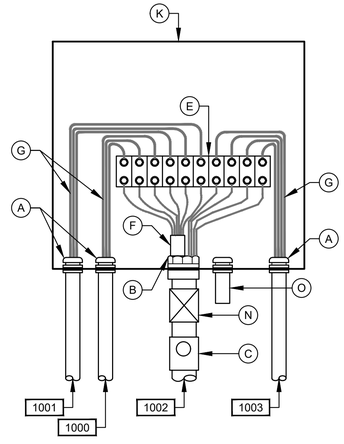

LEVEL TRANSMITTER
JUNCTION BOX

DETAIL 6
NTS
(SEE NOTE 7)

* REPLACE `X' PER NOTATION SCHEDULE

NOTATION SCHEDULE

`X'	PUMP NO.
2	101
3	102
4	103

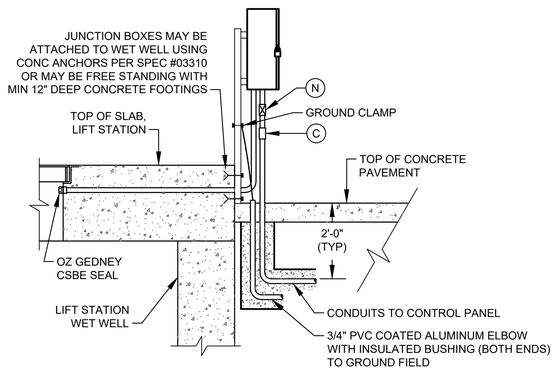

TYP SIDE VIEW FOR DETAIL 1, 2, & 7

(SEE NOTE 10)

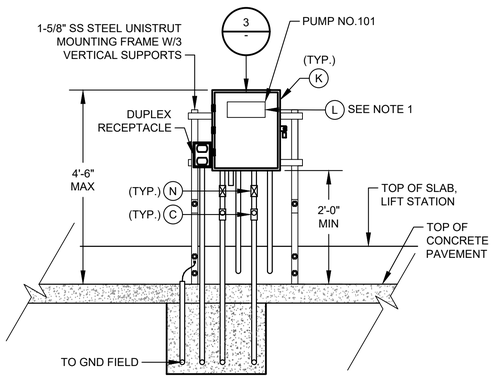

DETAIL 1
NTS
(SEE NOTE 9 & 12)

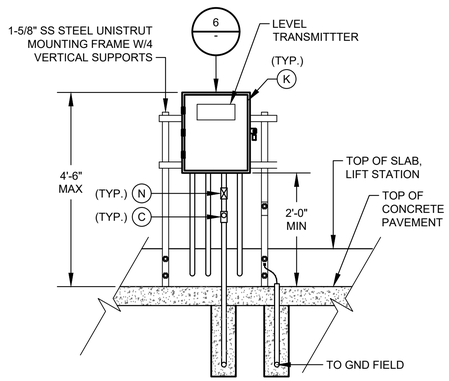

DETAIL 7
NTS
(SEE NOTE 9)

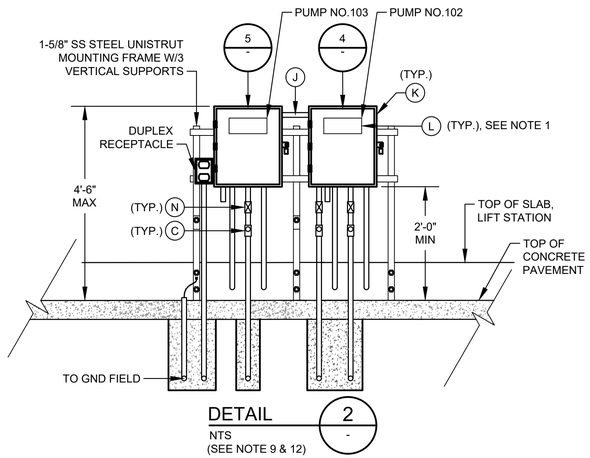

DETAIL 2
NTS
(SEE NOTE 9 & 12)

JUNCTION BOX EQUIPMENT SCHEDULE

- A - OZ GEDNEY CSBE SEAL
- B - WATERTIGHT CONDUIT HUB WITH INSULATED BUSHING
- C - CLASS I, DIV 1, EXPLOSION PROOF SEAL INSTALLED PER NEC DIV 501
- D - POWER TERMINAL BLOCK W/SCREW DOWN BOX LUGS
- E - CONTROL TERM BLOCK W/SCREW DOWN BOX LUGS
- F - MULTI-CONDUCTOR CABLE, REMOVE OUTER JACKET AS SHOWN
- G - WIRING AS SCHEDULED
- H - WIRING HARNESS PERMANENTLY AFFIXED
- I - PUMP CONTROL WIRING FROM PUMPS 2; 2 & 3; 4; OR D2, AS APPLICABLE
- J - 1 1/2" PVC COATED CONDUIT NIPPLE
- K - NEMA 6P STAINLESS STEEL JUNCTION BOX WITH GASKETED FRONT COVER, SINGLE QUARTER TURN, OIL-TIGHT LATCH AND PADLOCKING PROVISIONS, HOFFMAN D-3L16H1206 SS LF OR EQUAL. MINIMUM SIZE: 12"W X 16"H X 6"D
- L - NAMEPLATE, SEE SPECIFICATIONES (SEE NAMEPLATE SCHEDULE)
- M - MOTOR RATED SWITCH
- N - EXPANSION FITTING
- O - DRAIN VENT

NOTES:

1. NAMEPLATES SHALL BE MOUNTED TO JUNCTION BOXES USING 316 STAINLESS STEEL HARDWARE.
2. MAINTAIN MINIMUM SEPARATION REQUIRED UNDER NEC ARTICLE 504, BETWEEN INTRINSICALLY SAFE CONTROL WIRING AND NON INTRINSICALLY SAFE MOTOR FEEDER WIRING.
3. UNLESS OTHERWISE NOTED, ALL EXTERIOR EXPOSED CONDUITS SHALL BE PVC COATED ALUMINUM.
4. UNLESS OTHERWISE NOTED, ALL NUTS, BOLTS, SCREWS WASHERS, ETC SHALL BE TYPE 316 STAINLESS STEEL.
5. ALL UNDERGROUND CONDUITS TO BE ENCASED IN REINFORCED CONCRETE DUCTBANK.
6. PROVIDE ANTI-CORROSIVE SPRAY ON ANY BARE METAL PARTS OR EXPOSED WIRE.
7. SEE WIRING SCHEMATICS FOR TERMINALS AND WIRE NUMBERS.
8. ANY CONDUIT REQUIRING A CSBE SEAL, SHALL BE A MINIMUM SIZE OF 2 1/2" PER CABLE.
9. DETAIL SHOWN MAY BE MODIFIED PER SITE SITUATION.
10. COORDINATE WITH WASTE WATER OPERATIONS ELECTRICAL ORGANIZATION FOR THE OPENING OF JUNCTION BOXES TO THE SIDE OF WET WELL IF REQUIRED DURING CONSTRUCTION.
11. THE ENCLOSURES WITH ELECTRICAL CIRCUITS SHALL BE A MINIMUM OF 5 FEET FROM ANY CLASSIFIED AREA, OTHERWISE EXPLOSION PROOF TYPE ENCLOSURES SHALL BE USED.
12. THE RECEPTACLES SHALL BE EXPLOSION PROOF TYPE IF INSTALLED WITHIN 5 FEET OF CLASSIFIED AREA, SHALL BE FIELD VERIFIED.

NO.	DATE	REVISION	APP.

GAI
Gupta & Associates, Inc.
CONSULTING ENGINEERING
Registration No. F-2593
302 Dennis St.
Houston, Texas 77006
Tel: 713-636-2936
Fax: 713-636-2987
email: hforouzan@gaiconsulting.com

ARCADIS
Infrastructure · Water · Environment · Buildings
1330 Post Oak Blvd, Suite 2250
Houston, TX 77056
Tel: 713-953-4800
Fax: 713-977-4620
www.arcadis.com
Texas Registered Engineering Firm F-533

SURVEYED BY: AMANI ENGR.
FB NO. P-6335

STATE OF TEXAS
H. A. FOROUZAN
77748
REGISTERED PROFESSIONAL ENGINEER
11/18/2025

CITY OF HOUSTON
HOUSTON PUBLIC WORKS

LIFT STATION REHABILITATION & RECONSTRUCTION
CONSENT DECREE

EMNORA #2 LIFT STATION TYPICAL JUNCTION BOX DETAILS
E-59

WBS NUMBER	FOR CITY OF HOUSTON USE ONLY
R-000267-0175-4	
DRAWING SCALE	
AS SHOWN	
CITY OF HOUSTON PM	
NP NAWARAJ PANTA, P.E.	
SHEET NO. 222 OF 312	

FILE PATH: O:\H8103_Houston Lift Station Removal And Replacement (CMAR)\6 Drawings\Electrical\Working\Emnora #2\Emnora #2_E-11.dwg
PLOT STYLE: GAI.ctb PLOTTED: 11/18/2025 5:53 PM

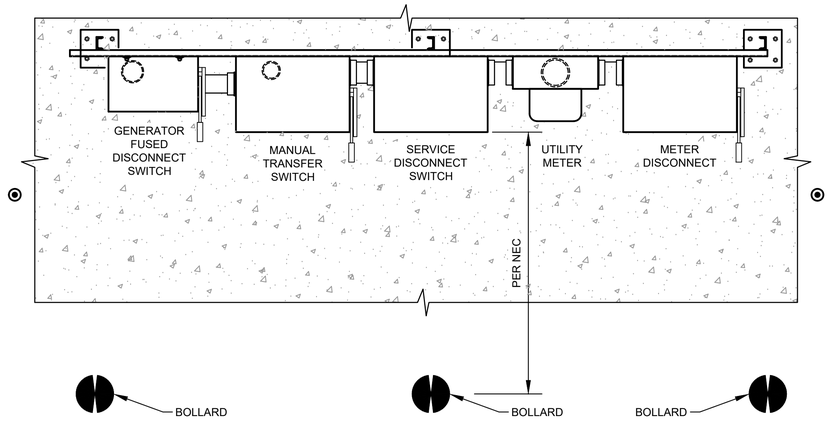

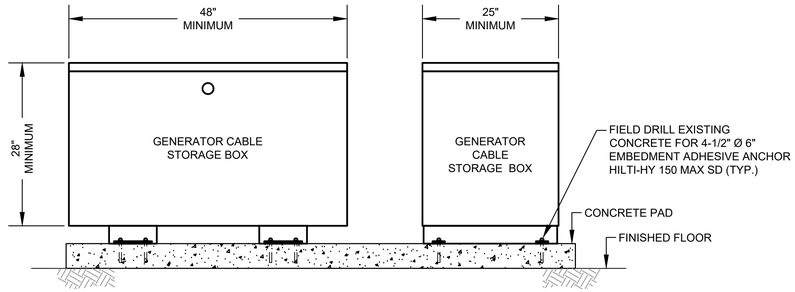

GENERATOR CABLE STORAGE BOX SIDE VIEW

DETAIL 20
NTS. -

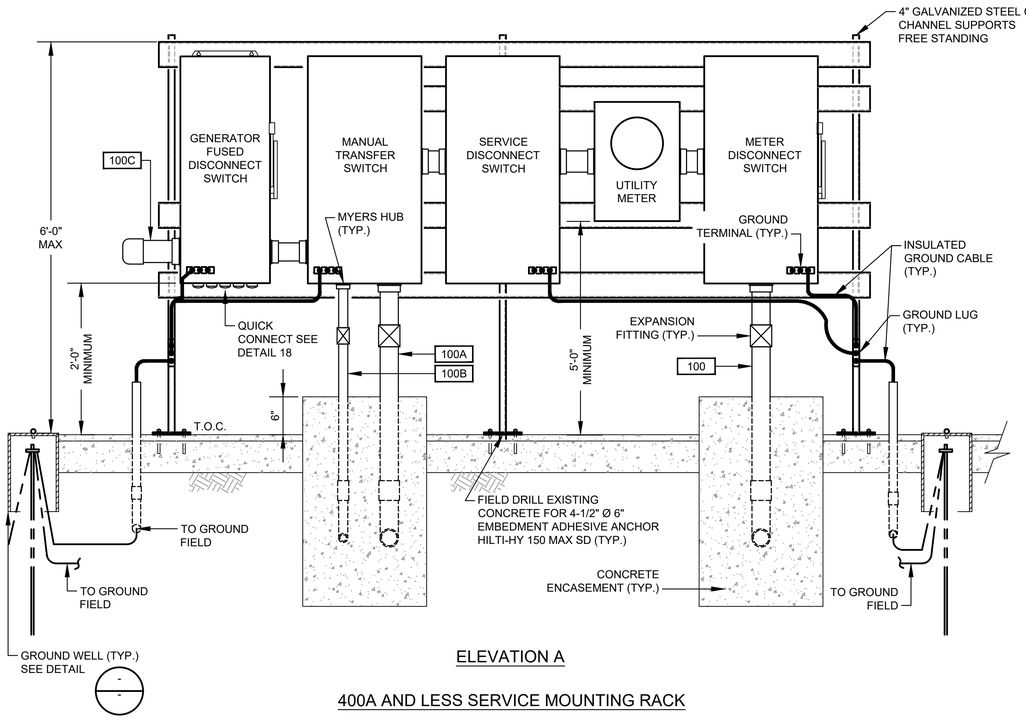

ELEVATION A

400A AND LESS SERVICE MOUNTING RACK

DETAIL 17
NTS. -

ALLOWABLE DEVICE AMPACITY CHART DLO RHW-2 CAM-LOK CONNECTOR CABLE		
CABLE SIZE AWG	AMPS	CABLE LENGTH
#1	220	65 FEET
4/0	400	65 FEET

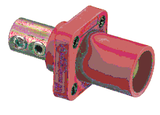

QUICK CONNECT FOR GENERATOR

PHOTOGRAPH 1
NTS. -

QUICK CONNECT FOR GENERATOR

PHOTOGRAPH 2
NTS. -

NOTES:

1. CHASE NIPPLE(S) WITH REMOVABLE CAP(S) FOR CONNECTION OF PORTABLE GENERATOR. NOTE: CAP(S) TO BE ATTACHED TO PANEL OR CONDUIT(S) BY STAINLESS STEEL CHAIN.
2. T.O.C DEFINED AS TOP OF PAVEMENT OR TOP OF PANEL ENCLOSURE PEDESTAL WHICHEVER IS HIGHER. (SEE NOTE B).
3. PROVIDE CENTER BOLLARD WHEN SPACE BETWEEN OUTSIDE BOLLARDS IS GREATER THEN 4'-0".

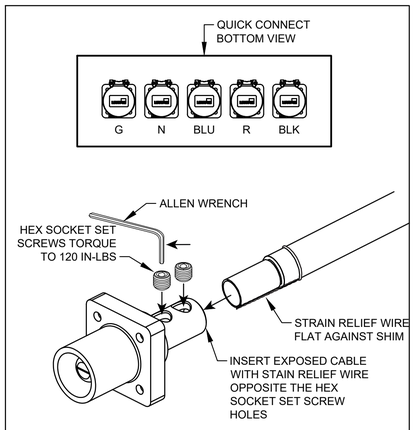

400A AND LESS FEMALE PLUG CABLE TERMINATION

DETAIL 18
NTS. -

REFER TO PHOTO NO.1

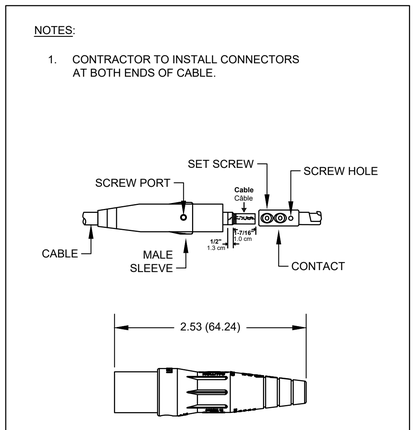

NOTES:

1. CONTRACTOR TO INSTALL CONNECTORS AT BOTH ENDS OF CABLE.

400A AND LESS MALE PLUG CABLE TERMINATION

DETAIL 19
NTS. -

REFER TO PHOTO NO.2

GAI
Gupta & Associates, Inc.
CONSULTING ENGINEERING
Registration No. F-2593
302 Dennis St.,
Houston, Texas 77006
Tel: 713-636-2936
Fax: 713-636-2967
email: hforouzan@gaiconsulting.com

ARCADIS
Infrastructure · Water · Environment · Buildings
1330 Post Oak Blvd, Suite 2250
Houston, TX 77056
Tel: 713-953-4800
Fax: 713-977-4620
www.arcadis.com
Texas Registered Engineering Firm F-533

SURVEYED BY: AMANI ENGR.
FB NO. P-6335

STATE OF TEXAS
H. A. FOROUZAN
77748
REGISTERED PROFESSIONAL ENGINEER
11/18/2025

CITY OF HOUSTON
HOUSTON PUBLIC WORKS

LIFT STATION REHABILITATION & RECONSTRUCTION CONSENT DECREE

EMNORA #2 LIFT STATION ELECTRICAL SERVICE RACK DETAILS
E-60

WBS NUMBER	FOR CITY OF HOUSTON USE ONLY
R-000267-0175-4	
DRAWING SCALE	
AS SHOWN	
CITY OF HOUSTON PM	
NP NAWARAJ PANTA, P.E.	
SHEET NO. 223 OF 312	

NO.	DATE	REVISION	APP.

FILE PATH: O:\H8103_Houston Lift Station Removal And Replacement (CMAR)\6 Drawings\Electrical\Working\Emnora #2\Emnora #2_E-12.dwg
PLOT STYLE: GAI.ctb PLOTTED: 11/18/2025 5:53 PM

HMI

INFLUENT PUMP NO.101

SEAL FAIL ALARM	MOTOR OVERLOAD ALARM	MOTOR CURRENT	HIGH TEMP ALARM	IN HAND	IN AUTO	ON/OFF	START/ STOP
MA 1	MO 1	II 1	TH 1	HI 1	IA 1	YFS 1	YCS 1

INFLUENT PUMP NO.102

SEAL FAIL ALARM	MOTOR OVERLOAD ALARM	MOTOR CURRENT	HIGH TEMP ALARM	IN HAND	IN AUTO	ON/OFF	START/ STOP
MA 2	MO 2	II 2	TH 2	HI 2	IA 2	YFS 2	YCS 2

INFLUENT PUMP NO.103

SEAL FAIL ALARM	MOTOR OVERLOAD ALARM	MOTOR CURRENT	HIGH TEMP ALARM	IN HAND	IN AUTO	ON/OFF	START/ STOP
MA 3	MO 3	II 3	TH 3	HI 3	IA 3	YFS 3	YCS 3

CONTROL PANEL PLC

CONTROL BUILDING

480V

INFLUENT PUMPS MCC

INFLUENT PUMP NO.101 — H/O/A — RUN

INFLUENT PUMP NO.102 — H/O/A — RUN

INFLUENT PUMP NO.103 — H/O/A — RUN

PRIMARY PLC

BACKUP PLC

INFLUENT PUMP CONTROL PANEL

ALARMS RESET

OIT

TO SHEET I-50

I-50

I-50

WET WELL

LT 1

LE 1

LT 2

LE 2

LSH 1A

TSH 1A

FS2 HIGH-HIGH LEVEL FLOAT SWITCH

M

10" 2" ARV 10" CHKVLV 10" PLV

LSH 2A

TSH 2A

M

10" 2" ARV 10" CHKVLV 10" PLV

20"

20" X 10"

LSH 3A

TSH 3A

FS1 HIGH LEVEL FLOAT SWITCH

M

10" 2" ARV 10" CHKVLV 10" PLV

20"

20" X 10"

INFLUENT DISCHARGE

APP. | REVISION | NO. | DATE

GAI
Gupta & Associates, Inc.
CONSULTING ENGINEERING
Registration No. F-2593

302 Dennis St.,
Houston, Texas 77006
Tel: 713-636-2936
Fax: 713-636-2987
email: hforouzan@gaiconsulting.com

ARCADIS
Infrastructure - Water - Environment - Buildings
1330 Post Oak Blvd, Suite 2250
Houston, TX 77056
Tel: 713-953-4800
Fax: 713-977-4620
www.arcadis.com
Texas Registered Engineering Firm F-533

SURVEYED BY: AMANI ENGR.

FB NO. P-6335

STATE OF TEXAS
H. A. FOROUZAN
77748
REGISTERED PROFESSIONAL ENGINEER

11/18/2025

CITY OF HOUSTON

HOUSTON PUBLIC WORKS

LIFT STATION REHABILITATION & RECONSTRUCTION CONSENT DECREE

EMNORA #2 LIFT STATION PROCESS & INSTRUMENTATION DIAGRAM-I

I-49

WBS NUMBER	FOR CITY OF HOUSTON USE ONLY
R-000267-0175-4	
DRAWING SCALE	
NONE	
CITY OF HOUSTON PM	
NP NAWARAJ PANTA, P.E.	
SHEET NO. 224 OF 312	

FILE PATH: O:\H8103_Houston Lift Station Removal And Replacement (CMAR)\6 Drawings\Instrumentation And Control\Working\Emnora #2\Emnora #2_I-01.dwg
PLOT STYLE: COH.ctb PLOTTED: 11/18/2025 6:22 PM

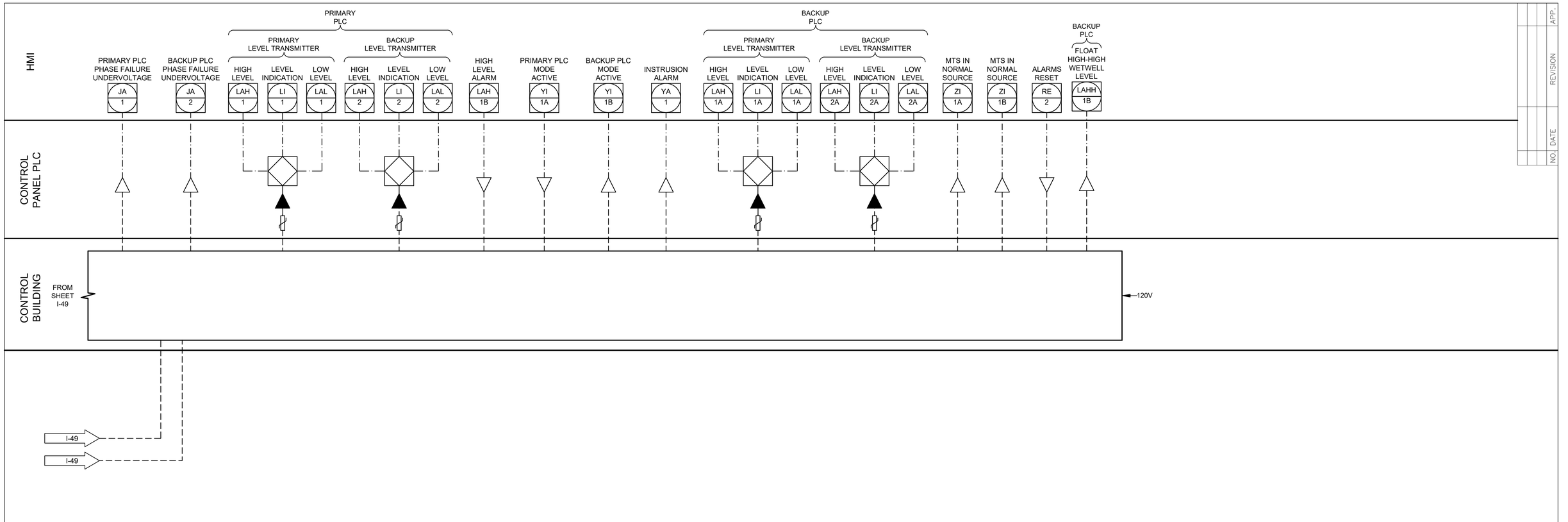

APP. | REVISION | NO. | DATE

FILE PATH: O:\H8103_Houston Lift Station Removal And Replacement (CMAR)\6 Drawings\Instrumentation And Control\Working\Emnora #2_I-02.dwg
PLOT STYLE: GAI.ctb PLOTTED: 11/18/2025 6:22 PM

GAI
Gupta & Associates, Inc.
CONSULTING ENGINEERING
Registration No. F-2593
302 Dennis St.,
Houston, Texas 77006
Tel: 713-636-2936
Fax: 713-636-2987
email: hforouzan@gaiconsulting.com

ARCADIS
Infrastructure - Water - Environment - Buildings
1330 Post Oak Blvd, Suite 2250
Houston, TX 77056
Tel: 713-953-4800
Fax: 713-977-4620
www.arcadis.com
Texas Registered Engineering Firm F-533

SURVEYED BY: AMANI ENGR.
FB NO. P-6335

STATE OF TEXAS
H. A. FOROUZAN
77748
REGISTERED PROFESSIONAL ENGINEER
11/18/2025

CITY OF HOUSTON
HOUSTON PUBLIC WORKS

LIFT STATION REHABILITATION & RECONSTRUCTION
CONSENT DECREE

EMNORA #2 LIFT STATION
PROCESS & INSTRUMENTATION DIAGRAM-II
I-50

WBS NUMBER	FOR CITY OF HOUSTON USE ONLY
R-000267-0175-4	
DRAWING SCALE	
NONE	
CITY OF HOUSTON PM	
NP NAWARAJ PANTA, P.E.	
SHEET NO. 225 OF 312	

EQUIPMENT AND DEVICE SCHEDULE

ITEM	QUANTITY	DESCRIPTION
A	1	SINGLE CHANNEL INTRINSICALLY SAFE RELAY
B	2	ANALOG SIGNAL ISOLATOR
C	4	PUMP PROTECTION MODULE
D	*	NOT USED
E	4	HAND-OFF-AUTO SWITCH, 3 POSITION, HEAVY-DUTY OIL TIGHT WITH 2 SETS OF CONTACT BLOCKS (PUMP CONTROL)
F	4	INDICATING LIGHT, HEAVY DUTY, OILTIGHT, RED, 24 VDC, LED, WITH "RUN" LEGEND
G	*	NOT USED.
H	1	SWITCH FOR CABINET LIGHT, 120V, 20A, SPST
I	2	DUPLEX RECEPTACLE, 120V, 20A, 2 WIRE, GROUNDED, GFCI TYPE
J	1	24" LED STRIP LIGHT 120V SUITABLE FOR ZERO DEGREE OPERATION
K	*	NAMEPLATES, SEE SPECIFICATIONS (SEE NAMEPLATE SCHEDULE)
L	2	PROGRAMMABLE LOGIC CONTROLLER WITH EXPANSION UNIT
M	*	CONTROL RELAY 24VDC RELAY WITH THREE FORM C CONTACTS AND 11 PIN SOCKET BASE
N	-	NOT USED
O	-	NOT USED
P	1	NEMA 12 GASKETED STEEL ENCLOSURES WITHOUT VENTS 72" H X 20" D X 48" W
Q	*	TERMINAL BLOCK
R	1	WIRE DUCT 2" WIDE X 2" DEEP MINIMUM
S	1	GROUND BUS
T	1	COMMUNICATION ETHERNET SWITCH
U	9	CARTRIDGE
V	1	PUSHBUTTON, BLACK WITH RESET LEGEND
W	-	NOT USED
X	*	FUSED TERMINAL BLOCKS
Y	1	POWER SURGE PROTECTOR - CONTROL POWER
Z	1	PROGRAMMING SCREEN (OIT)
AA	*	120VAC SYSTEM FUSES
BB	1	120VAC - 24VDC POWER SUPPLY, 5A
CC	*	NOT USED
DD	2	INDICATING LIGHT, HEAVY DUTY, OILTIGHT, GREEN, 24VDC, LED WITH "BACKUP PLC" & "PRIMARY PLC" LEGEND
EE	2	ANALOG I/O SURGE SUPPRESSOR
FF	-	NOT USED

* - AS SCHEDULED

NAMEPLATE SCHEDULE

DESIGNATION	ENGRAVED
N1	PUMP STATION DESIGNATION
N2	PUMP NO. 1
N3	PUMP NO. 2
N4	PUMP NO. 3
N5	NOT USED.
N6	NOT USED.
N7	NOT USED.
N8	NOT USED.
N9	NOT USED.
N10	PROGRAMMING SCREEN
N11	NOT USED.
N12	PRIMARY PLC
N13	BACKUP PLC
N14	MOTOR DATA

HORSEPOWER (OUTPUT) ----------
RPM AT FULL LOAD ----------
TIME RATING ----------
FREQUENCY ----------
NUMBER OF PHASES ----------
MODEL NUMBER ----------
RATED VOLTAGE ----------
SERVICE FACTOR ----------
FULL LOAD AMPS ----------
INSULATION CLASS ----------
NEMA DESIGN LETTER ----------
TEMPERATURE RISE ----------
NEMA FRAME SIZE ----------
DATE OF MANUFACTURE ----------
THERMO PROTECTION (IF REQUIRED) --
MOISTURE PROTECTION (IF REQUIRED)-

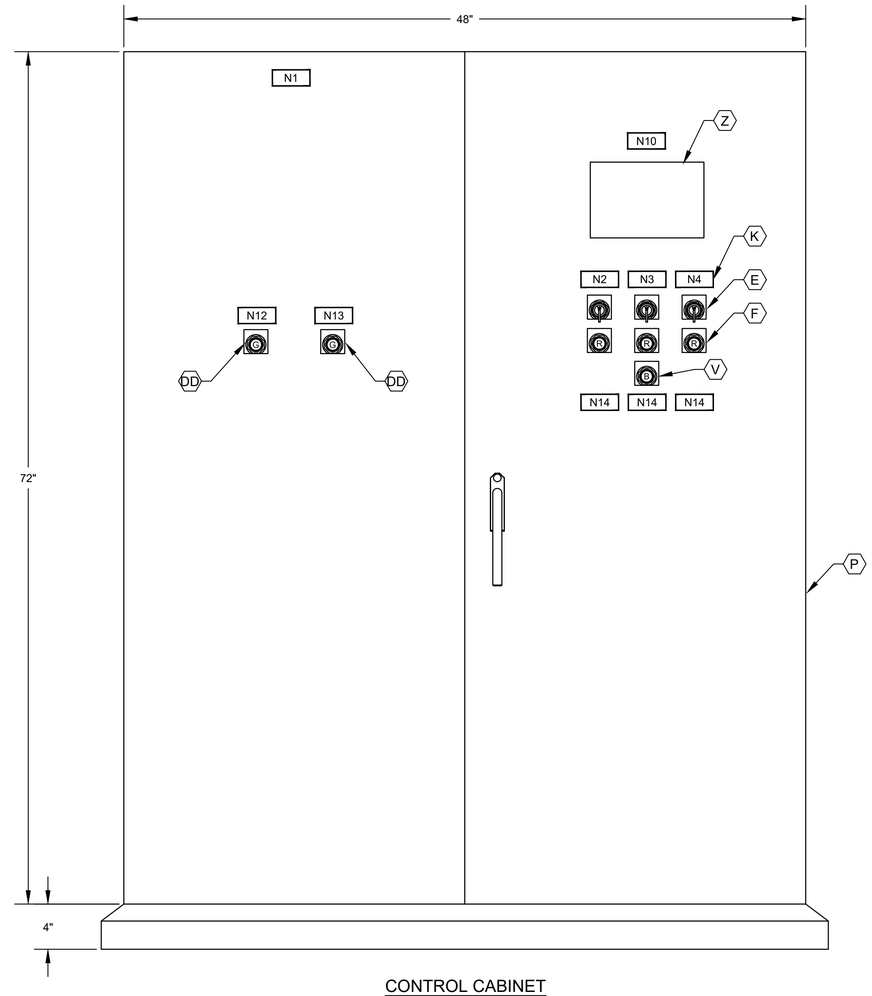

CONTROL CABINET
FRONT DOOR ELEVATION

NOTES:

1. NAMEPLATES SHALL BE MOUNTED TO PANELS USING STAINLESS STEEL HARDWARE.
2. REFER SPECIFICATIONS FOR ALL PANEL COMPONENTS.

NO.	DATE	REVISION	APP.

GAI
Gupta & Associates, Inc.
CONSULTING ENGINEERING
Registration No. F-2593
302 Dennis St.,
Houston, Texas 77006
Tel: 713-636-2936
Fax: 713-636-2987
email: hforouzan@gaiconsulting.com

ARCADIS
Infrastructure - Water - Environment - Buildings
1330 Post Oak Blvd, Suite 2250
Houston, TX 77056
Tel: 713-953-4800
Fax: 713-977-4620
www.arcadis.com
Texas Registered Engineering Firm F-533

SURVEYED BY: AMANI ENGR.
FB NO. P-6335

STATE OF TEXAS
H. A. FOROUZAN
77748
REGISTERED
PROFESSIONAL ENGINEER
11/18/2025

CITY OF HOUSTON
HOUSTON PUBLIC WORKS

LIFT STATION REHABILITATION & RECONSTRUCTION
CONSENT DECREE

EMNORA #2 LIFT STATION CONTROL PANEL EQUIPMENT LAYOUT & SCHEDULE

I-51

WBS NUMBER	FOR CITY OF HOUSTON USE ONLY
R-000267-0175-4	
DRAWING SCALE	
AS NOTED	
CITY OF HOUSTON PM	
NP NAWARAJ PANTA, P.E.	
SHEET NO. 226 OF 312	

FILE PATH: O:\H8103_Houston Lift Station Removal And Replacement (CMAR)\6 Drawings\Instrumentation And Control\Working\Emnora #2\Emnora #2_I-03.dwg
PLOT STYLE: GAI.ctb PLOTTED: 11/18/2025 6:22 PM

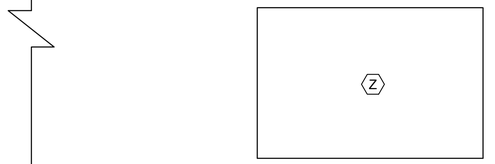

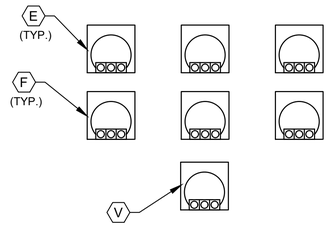

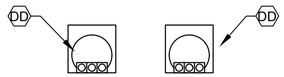

CONTROL CABINET
BACK DOOR ELEVATION

NOTES:

1. SEE SHEET I-51 FOR EQUIPMENT SCHEDULE.

NO.	DATE	REVISION	APP.

GAI
Gupta & Associates, Inc.
CONSULTING ENGINEERING
Registration No. F-2593
302 Dennis St.,
Houston, Texas 77006
Tel: 713-636-2936
Fax: 713-636-2987
email: hforouzan@gaiconsulting.com

ARCADIS
Infrastructure - Water - Environment - Buildings
1330 Post Oak Blvd, Suite 2250
Houston, TX 77056
Tel: 713-953-4800
Fax: 713-977-4620
www.arcadis.com
Texas Registered Engineering Firm F-533

SURVEYED BY: AMANI ENGR.
FB NO. P-6335

STATE OF TEXAS
H. A. FOROUZAN
77748
REGISTERED
PROFESSIONAL ENGINEER
11/18/2025

CITY OF HOUSTON
HOUSTON PUBLIC WORKS

LIFT STATION REHABILITATION & RECONSTRUCTION
CONSENT DECREE

EMNORA #2 LIFT STATION
CONTROL PANEL EQUIPMENT LAYOUT & SCHEDULE
I-52

WBS NUMBER	FOR CITY OF HOUSTON USE ONLY
R-000267-0175-4	
DRAWING SCALE	
AS NOTED	
CITY OF HOUSTON PM	
NP NAWARAJ PANTA, P.E.	
SHEET NO. 227 OF 312	

FILE PATH: O:\H8103_Houston Lift Station Removal And Replacement (CMAR)\6 Drawings\Instrumentation And Control\Working\Emnora #2\Emnora #2_I-04.dwg
PLOT STYLE: GAI.ctb PLOTTED: 11/18/2025 6:22 PM

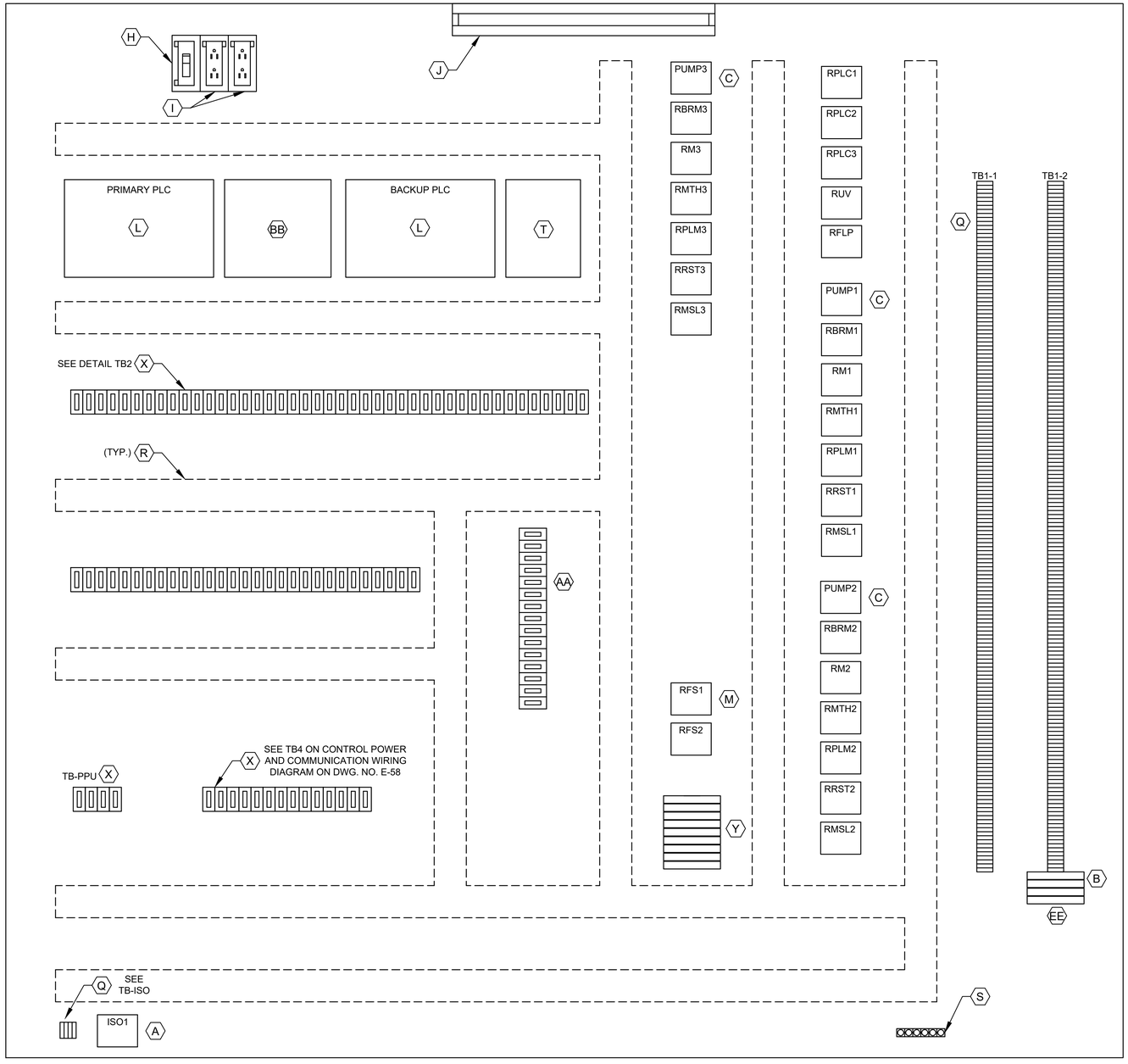

CONTROL PANEL ELEVATION

LEGEND	
TAG	DESCRIPTION
RMTH	MOTOR HIGH TEMPERATURE ALARM RELAY
RPLMP	PLC PUMP RUN RELAY
RRST	PUMP RESET AUX RELAY
RPLC	PLC MODE AUX RELAY
RM	PUMP RUN AUX RELAY
RUV	UNDER VOLTAGE RELAY
RBRM	BACKUP SYSTEM RUN RELAY
ISO	INTRINSICALLY SAFE RELAY
RFS	PUMP RUN FLOAT SWITCH RELAY
RMSL	MOTOR SEAL LEAK ALARM RELAY
RFLP	FLOAT LOCKOUT PUMP RELAY

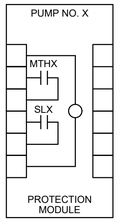

PUMP PROTECTION MODULE DETAIL, ITEM C

NOTE: REPLACE "X" WITH APPROPRIATE PUMP NO.

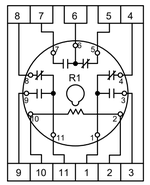

RELAY DETAIL ITEM M

L1A
L1N
SPARE
3
3N
SPARE
49
50
51
52
53
54
1004
1
24V-
24V-
SPARE
1002
2
11
1001
1001A
12
1003
1003A
34
3N
19
20
102
103
3P1
109
110
112
116
117
120
121
122
123
124
125
126
127
SPARE
SPARE
202
203
3P2
209
210
212
216
217
220
221
222
223
224
225
226
227

DETAIL TB1-1

SPARE
SPARE
302
303
3P3
309
310
312
316
317
320
321
322
323
324
325
326
327
SPARE
SPARE

DETAIL TB1-2

36A
37A
50
52
54
52A
52A
54A
L+
M
35B
38B
41B
44B
SPARE
SPARE
47B
50B
53B
13B
13AB
B
L+
M
14B
14AB
14GB
119
SPARE
L+
M
13
13A
13G
14
14A
14G
1M
2M
1L
3
30
32
34
37
38
41
33B
45
18B
SPARE

DETAIL TB2

100
112
113
114
115
117
118
119
120
121
SPARE
200
212
213
214
215
217
218
219
220
221
SPARE
300
312
313
314
315
317
318
319
320
321
SPARE

DETAIL TB2

1500
1501
1503
1504

DETAIL TB-ISO

NOTES:

1. SEE SHEET I-51 FOR EQUIPMENT SCHEDULE.

GAI
Gupta & Associates, Inc.
CONSULTING ENGINEERING
Registration No. F-2593
302 Dennis St.,
Houston, Texas 77006
Tel: 713-636-2936
Fax: 713-636-2987
email: hforouzan@gaiconsulting.com

ARCADIS
Infrastructure · Water · Environment · Buildings
1330 Post Oak Blvd, Suite 2250
Houston, TX 77056
Tel: 713-953-4800
Fax: 713-977-4620
www.arcadis.com
Texas Registered Engineering Firm F-533

SURVEYED BY: AMANI ENGR.
FB NO. P-6335

STATE OF TEXAS
H. A. FOROUZAN
77748
REGISTERED PROFESSIONAL ENGINEER
11/18/2025

CITY OF HOUSTON

HOUSTON PUBLIC WORKS

LIFT STATION REHABILITATION & RECONSTRUCTION CONSENT DECREE

EMNORA #2 LIFT STATION CONTROL CABINET EQUIPMENT LAYOUT

I-53

WBS NUMBER	FOR CITY OF HOUSTON USE ONLY
R-000267-0175-4	
DRAWING SCALE	
AS NOTED	
CITY OF HOUSTON PM	
NP NAWARAJ PANTA, P.E.	
SHEET NO. 228 OF 312	

NO.	DATE	REVISION	APP.

FILE PATH: O:\H8103_Houston Lift Station Removal And Replacement (CMAR)\6 Drawings\Instrumentation And Control\Working\Emnora #2\Emnora #2_I-05.dwg
PLOT STYLE: GAI.ctb PLOTTED: 11/18/2025 6:22 PM

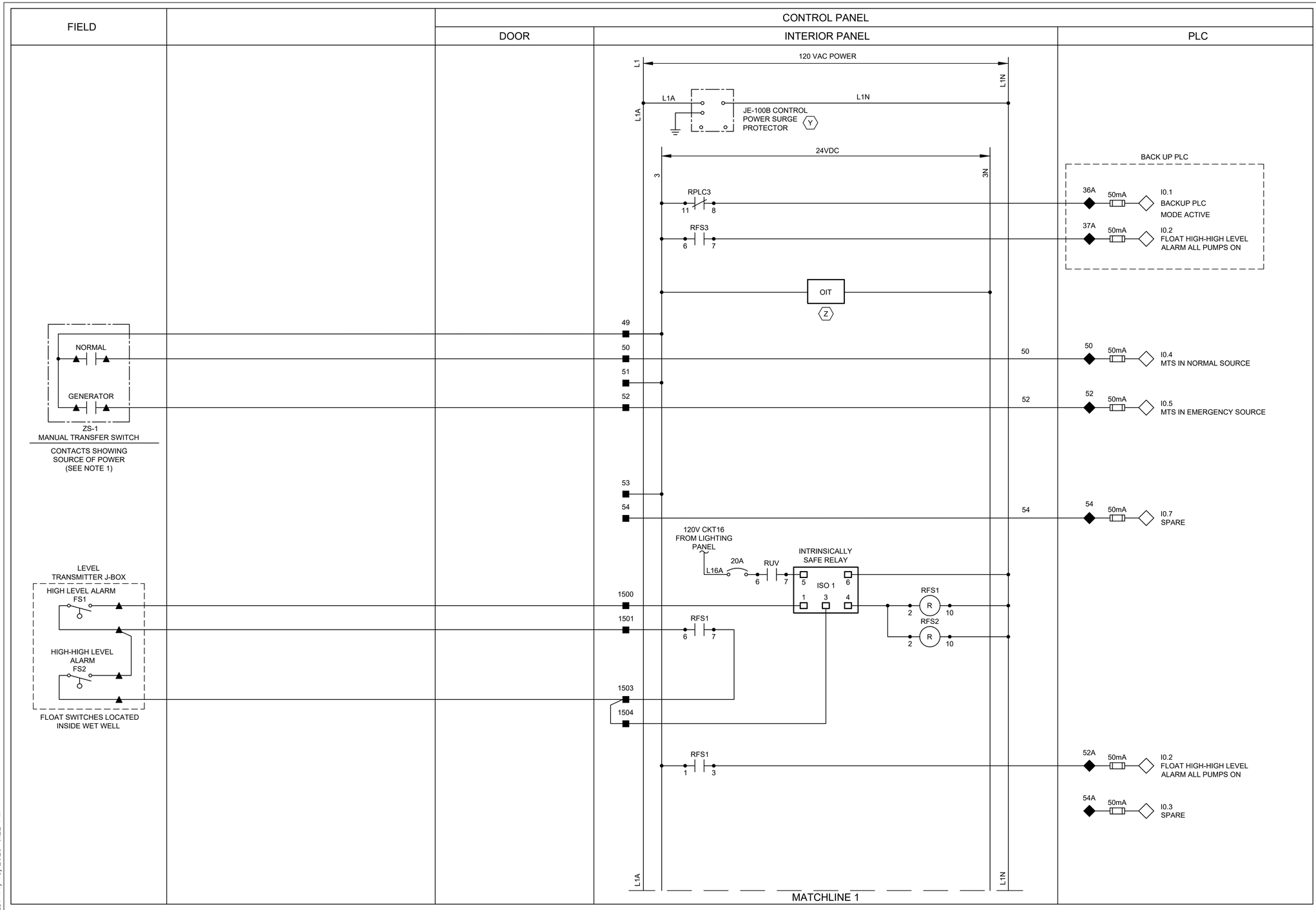

LEGEND

- △ DEVICE OR FIELD TERMINAL LOCATED AT MOTOR
- ✳ DEVICE OR FIELD TERMINAL LOCATED REMOTE
- □ DEVICE OR FIELD TERMINAL LOCATED AT MCC/POWER PANEL
- ■ FIELD TERMINAL LOCATED AT CONTROL PANEL
- ▲ REMOTE TERMINAL
- ● DEVICE TERMINAL NO.
- ◆ PLC INTERFACE TERMINAL

NOTES:

1. PROVIDE MANUAL TRANSFER SWITCH DRY CONTACT.
2. ALL FLOAT CONTROL CIRCUIT WIRES COLOR SHALL BE YELLOW.

GAI
Gupta & Associates, Inc.
CONSULTING ENGINEERING
Registration No. F-2593
302 Dennis St., Houston, Texas 77006
Tel: 713-636-2936
Fax: 713-636-2987
email: hforouzan@gaiconsulting.com

ARCADIS
Infrastructure · Water · Environment · Buildings
1330 Post Oak Blvd, Suite 2250
Houston, TX 77056
Tel: 713-953-4800
Fax: 713-977-4620
www.arcadis.com
Texas Registered Engineering Firm F-533

SURVEYED BY: AMANI ENGR.
FB NO. P-6335

STATE OF TEXAS
H. A. FOROUZAN
77748
REGISTERED PROFESSIONAL ENGINEER
11/18/2025

CITY OF HOUSTON

HOUSTON PUBLIC WORKS

LIFT STATION REHABILITATION & RECONSTRUCTION CONSENT DECREE

EMNORA #2 LIFT STATION CONTROL WIRING DIAGRAM–I

I–54

WBS NUMBER	FOR CITY OF HOUSTON USE ONLY
R–000267–0175–4	
DRAWING SCALE	
NONE	
CITY OF HOUSTON PM	
NP NAWARAJ PANTA, P.E.	
SHEET NO. 229 OF 312	

NO.	DATE	REVISION	APP.

FILE PATH: O:\H8103_Houston Lift Station Removal And Replacement (CMAR)\6 Drawings\Instrumentation And Control\!Working\Emnora #2\Emnora #2_I-06.dwg
PLOT STYLE: GAI.ctb PLOTTED: 11/18/2025 6:22 PM

FIELD	MOTOR CONTROL CENTER (INDOOR)	CONTROL PANEL		
		DOOR	INTERIOR PANEL	PLC

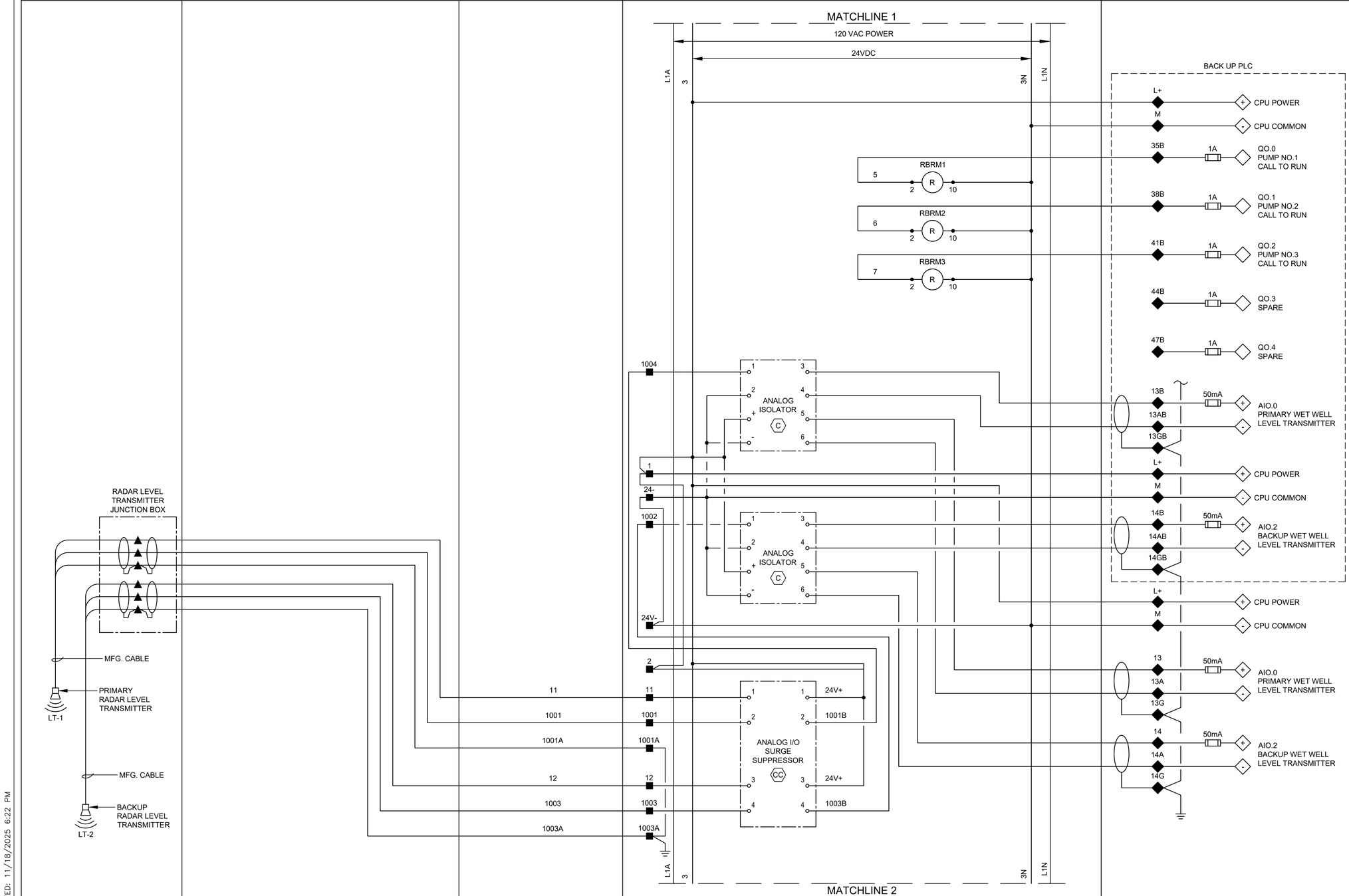

LEGEND

- △ DEVICE OR FIELD TERMINAL LOCATED AT MOTOR
- ✳ DEVICE OR FIELD TERMINAL LOCATED REMOTE
- □ DEVICE OR FIELD TERMINAL LOCATED AT MCC/POWER PANEL
- ■ FIELD TERMINAL LOCATED AT CONTROL PANEL
- ▲ REMOTE TERMINAL
- ● DEVICE TERMINAL NO.
- ◆ PLC INTERFACE TERMINAL

NO.	DATE	REVISION	APP.

GAI
Gupta & Associates, Inc.
CONSULTING ENGINEERING
Registration No. F-2593
302 Dennis St.,
Houston, Texas 77006
Tel: 713-636-2936
Fax: 713-636-2987
email: hforouzan@gaiconsulting.com

ARCADIS
Infrastructure · Water · Environment · Buildings
1330 Post Oak Blvd, Suite 2250
Houston, TX 77056
Tel: 713-953-4800
Fax: 713-977-4620
www.arcadis.com
Texas Registered Engineering Firm F-533

STATE OF TEXAS
H. A. FOROUZAN
77748
REGISTERED
PROFESSIONAL ENGINEER
11/18/2025

SURVEYED BY: AMANI ENGR.
FB NO. P-6335

CITY OF HOUSTON

HOUSTON PUBLIC WORKS

LIFT STATION REHABILITATION & RECONSTRUCTION
CONSENT DECREE

EMNORA #2 LIFT STATION
CONTROL WIRING DIAGRAM-II

I-55

WBS NUMBER	FOR CITY OF HOUSTON USE ONLY
R-000267-0175-4	
DRAWING SCALE	
NONE	
CITY OF HOUSTON PM	
NP NAWARAJ PANTA, P.E.	
SHEET NO. 230 OF 312	

FILE PATH: O:\H8103_Houston Lift Station Removal And Replacement (CMAR)\6 Drawings\Instrumentation And Control\Working\Emnora #2\Emnora #2_I-07.dwg
PLOT STYLE: GAI.ctb PLOTTED: 11/18/2025 6:22 PM

FIELD | MOTOR CONTROL CENTER | CONTROL PANEL: DOOR | CONTROL PANEL: INTERIOR PANEL | PLC

MATCHLINE 2

120 VAC POWER

24VDC

L1A | 24+ | 24- | L1N

M1 M2 — 9 — 19

10 — 20

RFLP: R — 2 — 10

L1

N

MS

MOTION SWITCH

L1

N

MS

MOTION SWITCH

34 — 34

RUV: R — 2 — 10

RPLC1: R — 2 — 10

RPLC2: R — 2 — 10

RPLC3: R — 2 — 10

YI-1 PRIMARY PLC: G

RPLC3: 6 — 5

YI-2 BACKUP PLC: G

ØA ØB ØC

JE-2 PHASE MONITOR

7 8 9 — 10 11 12

N/C

YI-2 BUILDING EXTERIOR ALARM LIGHT: R

RUV: 11 — 9

L1A | 24+ | 24- | L1N

MATCHLINE 3

1M		DI COMMON
2M		AI COMMON
1L		DO POWER
3		DO POWER
30	1A	Q0.0 SPARE
32	50mA	I0.0 PLC INTRUSION ALARM
34	50mA	I0.1 PHASE FAILURE UNDER VOLTAGE
37	50mA	I0.3 SPARE
38	50mA	Q0.1 PLC MODE ACTIVE
41	50mA	I0.2 SPARE
BACK UP PLC		
33B	50mA	Q0.6 SPARE
45	50mA	Q0.2 HIGH LEVEL ALARM
BACK UP PLC		
18B	50mA	I0.0 PHASE FAILURE UNDER VOLTAGE

LEGEND

- △ DEVICE OR FIELD TERMINAL LOCATED AT MOTOR
- ✳ DEVICE OR FIELD TERMINAL LOCATED REMOTE
- □ DEVICE OR FIELD TERMINAL LOCATED AT MCC/POWER PANEL
- ■ FIELD TERMINAL LOCATED AT CONTROL PANEL
- ▲ REMOTE TERMINAL
- ● DEVICE TERMINAL NO.
- ◆ PLC INTERFACE TERMINAL

NO.	DATE	REVISION	APP.

GAI
Gupta & Associates, Inc.
CONSULTING ENGINEERING
Registration No. F-2593
302 Dennis St., Houston, Texas 77006
Tel: 713-636-2936
Fax: 713-636-2987
email: hforouzan@gaiconsulting.com

ARCADIS
Infrastructure · Water · Environment · Buildings
1330 Post Oak Blvd, Suite 2250
Houston, TX 77056
Tel: 713-953-4800
Fax: 713-977-4620
www.arcadis.com
Texas Registered Engineering Firm F-533

STATE OF TEXAS — H. A. FOROUZAN — 77748 — REGISTERED PROFESSIONAL ENGINEER — 11/18/2025

SURVEYED BY: AMANI ENGR.
FB NO. P-6335

CITY OF HOUSTON

HOUSTON PUBLIC WORKS

LIFT STATION REHABILITATION & RECONSTRUCTION CONSENT DECREE

EMNORA #2 LIFT STATION CONTROL WIRING DIAGRAM-III

I-56

WBS NUMBER	FOR CITY OF HOUSTON USE ONLY
R-000267-0175-4	
DRAWING SCALE	
NONE	
CITY OF HOUSTON PM	
NP NAWARAJ PANTA, P.E.	
SHEET NO. 231 OF 312	

FILE PATH: O:\H8103_Houston Lift Station Removal And Replacement (CMAR)\6 Drawings\Instrumentation And Control\Working\Emnora #2\Emnora #2_I-08.dwg
PLOT STYLE: GAI.ctb PLOTTED: 11/18/2025 6:22 PM

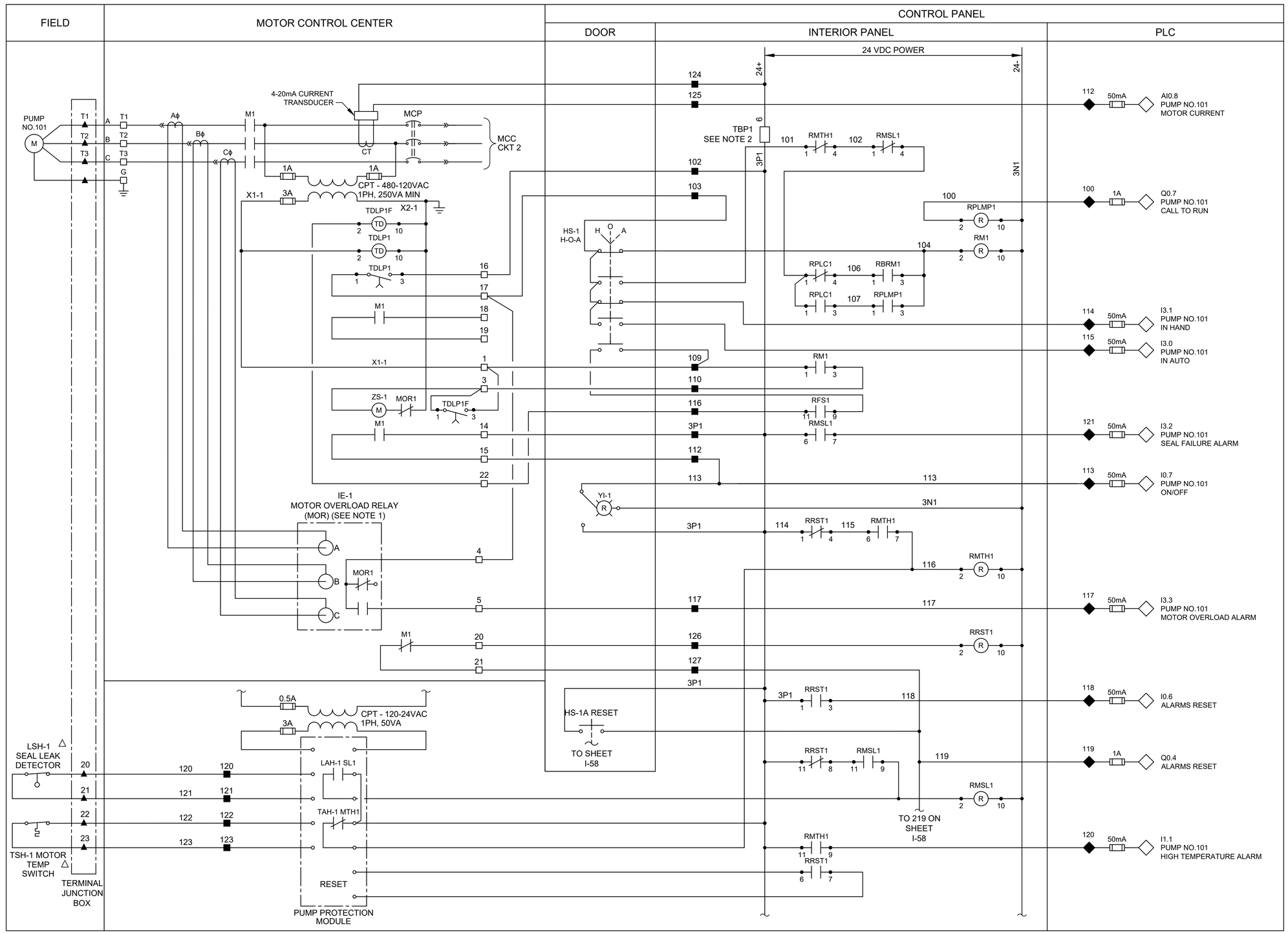

LEGEND

- △ DEVICE OR FIELD TERMINAL LOCATED AT MOTOR
- ✳ DEVICE OR FIELD TERMINAL LOCATED REMOTE
- □ DEVICE OR FIELD TERMINAL LOCATED AT MCC/POWER PANEL
- ■ FIELD TERMINAL LOCATED AT CONTROL PANEL
- ▲ REMOTE TERMINAL
- ● DEVICE TERMINAL NO.
- ◆ PLC INTERFACE TERMINAL

NOTES:

1. MOTOR OVERLOAD RELAY OUTPUT CONTACT SHOWN NORMALLY CLOSED WHEN RELAY IS DE-ENERGIZED, OPEN WHEN ENERGIZED, AND CLOSED WHEN IN ALARM. VERIFY OPERATION OF RELAY PROVIDED AND ADJUST CONNECTION OF RMOR AUXILIARY RELAYS.
2. FUSED TERMINAL ON TERMINAL BLOCK TB4 SEE CONTROL POWER AND COMMUNICATION WIRING DIAGRAM DRAWING NO. E-58.
3. ALL FLOAT CONTROL CIRCUIT WIRES COLOR SHALL BE YELLOW.

NO.	DATE	REVISION	APP.

GAI
Gupta & Associates, Inc.
CONSULTING ENGINEERING
Registration No. F-2593
302 Dennis St., Houston, Texas 77006
Tel: 713-636-2936
Fax: 713-636-2967
email: hforouzan@gaiconsulting.com

ARCADIS
Infrastructure · Water · Environment · Buildings
1330 Post Oak Blvd, Suite 2250
Houston, TX 77056
Tel: 713-953-4800
Fax: 713-977-4620
www.arcadis.com
Texas Registered Engineering Firm F-533

SURVEYED BY: AMANI ENGR.
FB NO. P-6335

STATE OF TEXAS · H. A. FOROUZAN · 77748 · REGISTERED PROFESSIONAL ENGINEER
11/18/2025

CITY OF HOUSTON

HOUSTON PUBLIC WORKS

LIFT STATION REHABILITATION & RECONSTRUCTION CONSENT DECREE

EMNORA #2 LIFT STATION CONTROL WIRING DIAGRAM PUMP-101

I-57

WBS NUMBER	FOR CITY OF HOUSTON USE ONLY
R-000267-0175-4	
DRAWING SCALE	
NONE	
CITY OF HOUSTON PM	
NP NAWARAJ PANTA, P.E.	
SHEET NO. 232 OF 312	

FILE PATH: O:\H8103_Houston Lift Station Removal And Replacement (CMAR)\6 Drawings\Instrumentation And Control\Working\Emnora #2_I-09.dwg
PLOT STYLE: GAI.ctb PLOTTED: 11/18/2025 6:22 PM

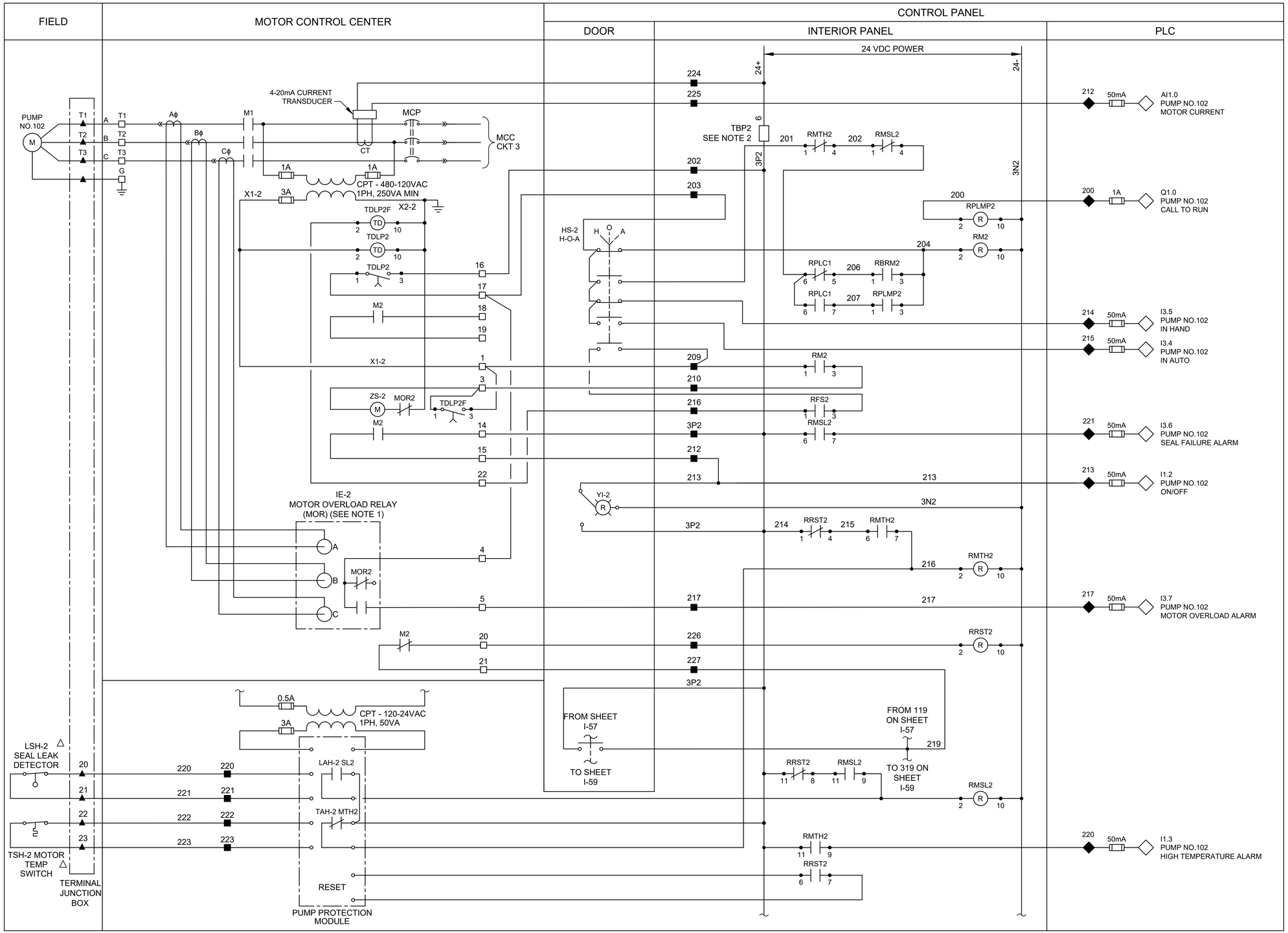

LEGEND

- △ DEVICE OR FIELD TERMINAL LOCATED AT MOTOR
- ✳ DEVICE OR FIELD TERMINAL LOCATED REMOTE
- □ DEVICE OR FIELD TERMINAL LOCATED AT MCC/POWER PANEL
- ■ FIELD TERMINAL LOCATED AT CONTROL PANEL
- ▲ REMOTE TERMINAL
- ● DEVICE TERMINAL NO.
- ◆ PLC INTERFACE TERMINAL

NOTES:

1. MOTOR OVERLOAD RELAY OUTPUT CONTACT SHOWN NORMALLY CLOSED WHEN RELAY IS DE-ENERGIZED, OPEN WHEN ENERGIZED, AND CLOSED WHEN IN ALARM. VERIFY OPERATION OF RELAY PROVIDED AND ADJUST CONNECTION OF RMOR AUXILIARY RELAYS.
2. FUSED TERMINAL ON TERMINAL BLOCK TB4 SEE CONTROL POWER AND COMMUNICATION WIRING DIAGRAM DRAWING NO. E-58.
3. ALL FLOAT CONTROL CIRCUIT WIRES COLOR SHALL BE YELLOW.

GAI
Gupta & Associates, Inc.
CONSULTING ENGINEERING
Registration No. F-2593
302 Dennis St., Houston, Texas 77006
Tel: 713-636-2936
Fax: 713-636-2987
email: hforouzan@gaiconsulting.com

ARCADIS
Infrastructure · Water · Environment · Buildings
1330 Post Oak Blvd, Suite 2250
Houston, TX 77056
Tel: 713-953-4800
Fax: 713-977-4620
www.arcadis.com
Texas Registered Engineering Firm F-533

SURVEYED BY: AMANI ENGR.
FB NO. P-6335

STATE OF TEXAS
H. A. FOROUZAN
77748
REGISTERED PROFESSIONAL ENGINEER
11/18/2025

CITY OF HOUSTON

HOUSTON PUBLIC WORKS

LIFT STATION REHABILITATION & RECONSTRUCTION CONSENT DECREE

EMNORA #2 LIFT STATION CONTROL WIRING DIAGRAM PUMP-102

I-58

WBS NUMBER	FOR CITY OF HOUSTON USE ONLY
R-000267-0175-4	
DRAWING SCALE	
NONE	
CITY OF HOUSTON PM	
NP NAWARAJ PANTA, P.E.	
SHEET NO. 233 OF 312	

NO.	DATE	REVISION	APP.

FILE PATH: O:\H8103_Houston Lift Station Removal And Replacement (CMAR)\6 Drawings\Instrumentation And Control\!Working\Emnora #2\Emnora #2_I-10.dwg
PLOT STYLE: GAI.ctb PLOTTED: 11/18/2025 6:22 PM

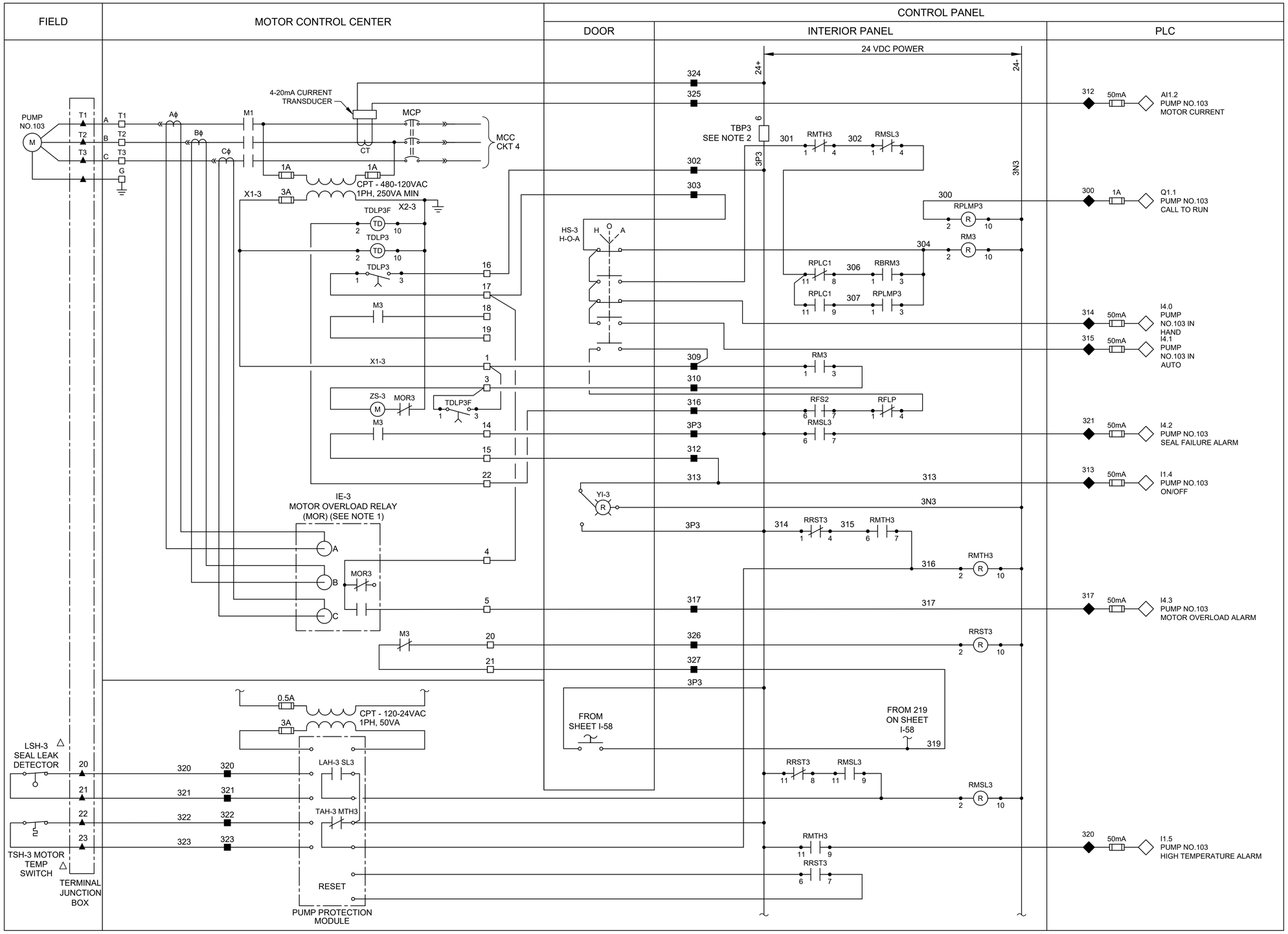

LEGEND

- △ DEVICE OR FIELD TERMINAL LOCATED AT MOTOR
- ✳ DEVICE OR FIELD TERMINAL LOCATED REMOTE
- □ DEVICE OR FIELD TERMINAL LOCATED AT MCC/POWER PANEL
- ■ FIELD TERMINAL LOCATED AT CONTROL PANEL
- ▲ REMOTE TERMINAL
- ● DEVICE TERMINAL NO.
- ◆ PLC INTERFACE TERMINAL

NOTES:

1. MOTOR OVERLOAD RELAY OUTPUT CONTACT SHOWN NORMALLY CLOSED WHEN RELAY IS DE-ENERGIZED, OPEN WHEN ENERGIZED, AND CLOSED WHEN IN ALARM. VERIFY OPERATION OF RELAY PROVIDED AND ADJUST CONNECTION OF RMOR AUXILIARY RELAYS.
2. FUSED TERMINAL ON TERMINAL BLOCK TB4 SEE CONTROL POWER AND COMMUNICATION WIRING DIAGRAM DRAWING NO. E-58.
3. ALL FLOAT CONTROL CIRCUIT WIRES COLOR SHALL BE YELLOW.

GAI
Gupta & Associates, Inc.
CONSULTING ENGINEERING
Registration No. F-2593
302 Dennis St., Houston, Texas 77006
Tel: 713-636-2936
Fax: 713-636-2987
email: hforouzan@gaiconsulting.com

ARCADIS
Infrastructure · Water · Environment · Buildings
1330 Post Oak Blvd, Suite 2250
Houston, TX 77056
Tel: 713-953-4800
Fax: 713-977-4620
www.arcadis.com
Texas Registered Engineering Firm F-533

SURVEYED BY: AMANI ENGR.
FB NO. P-6335

STATE OF TEXAS
H. A. FOROUZAN
77748
REGISTERED PROFESSIONAL ENGINEER
11/18/2025

CITY OF HOUSTON

HOUSTON PUBLIC WORKS

LIFT STATION REHABILITATION & RECONSTRUCTION CONSENT DECREE

EMNORA #2 LIFT STATION CONTROL WIRING DIAGRAM PUMP-103

I-59

WBS NUMBER	FOR CITY OF HOUSTON USE ONLY
R-000267-0175-4	
DRAWING SCALE	
NONE	
CITY OF HOUSTON PM	
NP NAWARAJ PANTA, P.E.	
SHEET NO. 234 OF 312	

NO.	DATE	REVISION	APP.

FILE PATH: O:\H8103_Houston Lift Station Removal And Replacement (CMAR)\6 Drawings\Instrumentation And Control\Working\Emnora #2\Emnora #2_I-11.dwg
PLOT STYLE: GAI.ctb PLOTTED: 11/18/2025 6:22 PM

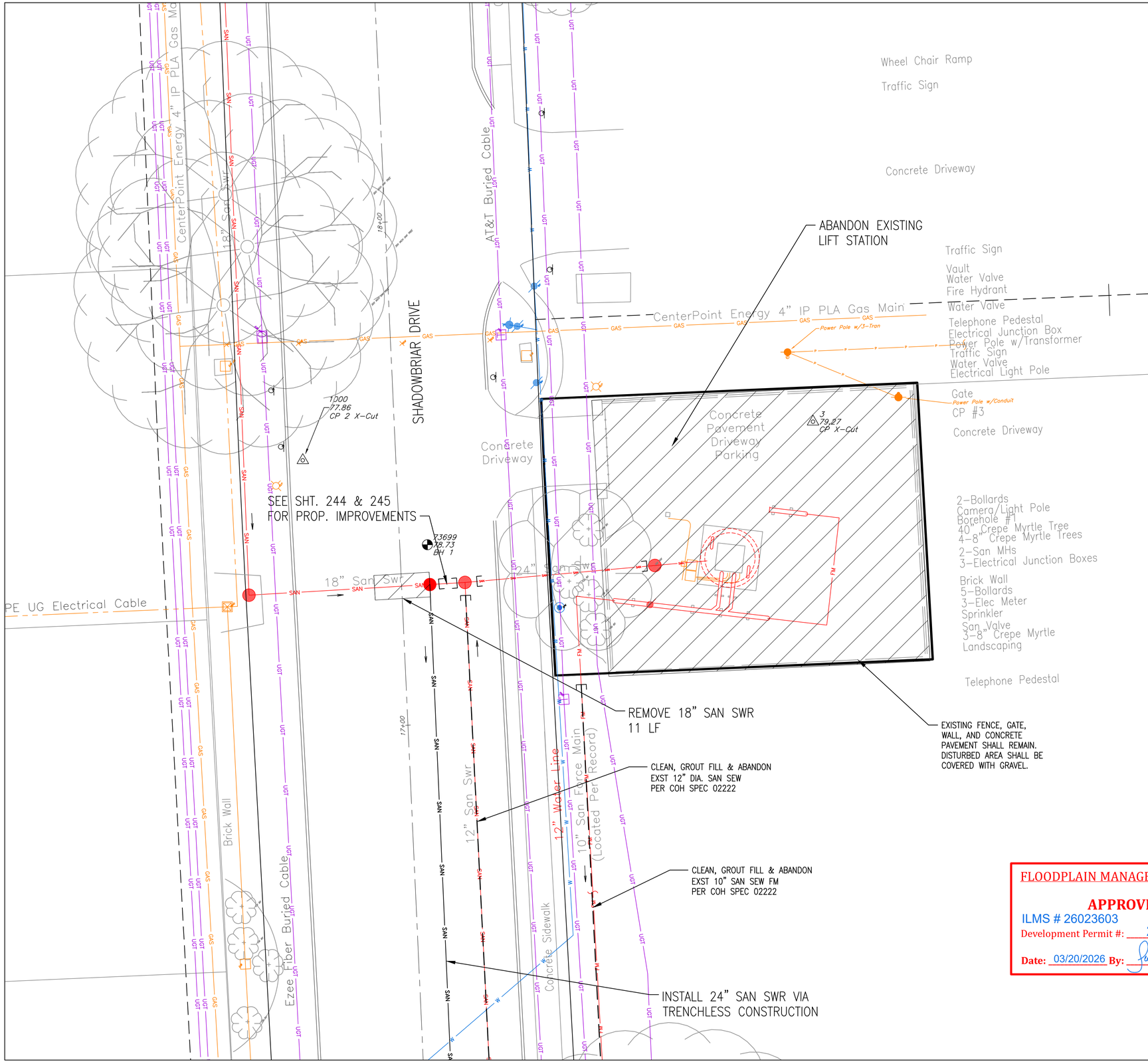

LIFT STATION DEMOLITION AND SALVAGE NOTES

1. DO NOT PROCEED WITH DEMOLITION OR REMOVAL UNTIL AUTHORIZED BY PROJECT MANAGER. NO DEMOLITION SHALL BE PERFORMED UNTIL BYPASS PUMPING IS OPERATIONAL.
2. PROVIDE SAFE WORKING CONDITIONS FOR EMPLOYEES THROUGHOUT DEMOLITION AND REMOVAL OPERATIONS. OBSERVE SAFETY REQUIREMENTS FOR WORK BELOW GRADE.
3. MAINTAIN SAFE ACCESS TO ADJACENT PROPERTY AND BUILDINGS. DO NOT OBSTRUCT ROADWAYS, SIDEWALKS OR PASSAGEWAYS ADJACENT TO THE WORK.
4. PERFORM DEMOLITION IN A MANNER TO PREVENT DAMAGE TO ADJACENT PROPERTY. REPAIR DAMAGE TO CITY PROPERTY OR ADJACENT PROPERTY AND FACILITIES.
5. THE CONTRACTOR SHALL BE RESPONSIBLE FOR SAFETY AND INTEGRITY OF ADJACENT STRUCTURE AND SHALL BE LIABLE FOR ANY DAMAGE DUE TO MOVEMENT OR SETTLEMENT. PROVIDED PROPER FRAMING AND SHORING NECESSARY FOR SUPPORT. CEASE OPERATIONS IF AN ADJACENT STRUCTURE APPEARS TO BE ENDANGERED. RESUME DEMOLITION ONLY AFTER PROPER PROTECTIVE MEASURES HAVE BEEN TAKEN.
6. NOTIFY AND COORDINATE WITH UTILITY COMPANY AND ADJACENT BUILDING OCCUPANTS WHEN TEMPORARY INTERRUPTION OF UTILITY SERVICE IS NECESSARY.
7. REMOVE REMAINING SLUDGE, SOLIDS, AND MATERIALS FROM WET WELL AND RINSE/CLEAN INTERIOR PRIOR TO BACKFILL OPERATIONS.
8. DEMOLITION CONCRETE LIFT STATION STRUCTURES, CONCRETE SLABS, AND WALLS TO A MINIMUM OF 4 FEET BELOW FINISHED GRADE.
9. REMOVE ALL PIPING, WIRING, CONDUITS, DUCTWORK AND OTHER MISCELLANEOUS ITEMS TO CONCRETE SURFACES.
10. BACKFILL AND COMPACT ENTIRE LIFT STATION STRUCTURE WITH FILL WITH SUITABLE BACKFILL MATERIAL UP TO THE SURFACE TO 90% COMPACTION. C-SAND ONLY NECESSARY IF BACKFILLING UNDER PAVEMENT.
11. DO NOT BACKFILL WITH MATERIAL FROM DEMOLITION UNLESS APPROVED BY PROJECT MANAGER.
12. CUT 6 QTY - 6" EQUALLY SPACED OPENINGS IN BOTTOM OF LIFT STATION SLAB. CUT OPENINGS CLEAR THROUGH SLAB FOR UNOBSTRUCTED OPENING TO SOILS UNDERNEATH. BACKFILL OPENING WITH CLEAN GRAVEL OR ROCK.
13. ALL OPENINGS BELOW THE REMOVED WALLS SHALL BE SEALED WITH NON-SHRINK GROUT.
14. CONTRACTOR TO OBTAIN ALL NECESSARY PERMITS (INCLUDING DEMOLISH PERMITS, COH FORM NO. CE-1075 & TEXAS DSHS FORM APB#5) REQUIRED. CONTRACTOR SHALL COORDINATE DISCONNECT WITH CENTERPOINT ENERGY TO ELECTRICAL POWER.
15. THE CITY OF HOUSTON HAS THE FIRST RIGHT OF REFUSAL OF ANY EQUIPMENT OR MATERIAL REMOVED. CONTACT CITY PROJECT MANAGER AL LEAST 72 HOUR PRIOR TO DEMOLITION IN ORDER TO COORDINATE REMOVAL OF ANY ITEMS THE CITY WISHES TO CLAIM AS SALVAGE. THE CONTRACTOR SHALL DELIVER ALL SALVAGED ITEMS TO A LOCATION, WITHIN THE CITY, DETERMINED BY THE CITY. THE CONTRACTOR SHALL PROPERLY DISPOSE OFF ALL OTHER EQUIPMENT AND MATERIAL NOT IDENTIFIED FOR SALVAGE.
16. THE EXISTING WET WELL SHALL BE CLEANED OF ALL DEBRIS, WASTEWATER, AND OTHER RESIDUES.
17. THE CONTRACTOR SHALL DISPOSE OF ANY LIQUID OR SOLID WASTE FOUND IN THE WET WELL AT A DISPOSAL FACILITY LICENSED & APPROVED BY THE STATE OF TEXAS. THE CONTRACTOR SHALL BE RESPONSIBLE FOR THE COST OF TRANSPORTATION, DISPOSAL & TESTING REQUIRED BY STATE & FEDERAL REGULATORY AGENCIES & BY THE DISPOSAL FACILITY.
18. CONTRACTOR TO COORDINATE WITH CENTERPOINT ENERGY ON REMOVAL OF POWER LINES FROM SERVICE POLE TO ELECTRICAL POLE.

N

0' 5' 10' 20'

SCALE: 1"=10'

BENCHMARK:

STATIC GPS OBSERVATION OF CITY OF HOUSTON MONUMENT 4855-7914 MADE ON 08/01/2024. A BRASS DISK LOCATED ON SOUTHSIDE OF WESTPARK APPROXIMATELY 0.24 MILES WEST OF W. HOUSTON CENTER BLVD.
ELEVATION: 70.96' (NAVD 88 GEOID 18)

NO	DATE	REVISION	APPROVED

NOTICE:
FOR YOUR SAFETY, YOU ARE REQUIRED BY TEXAS LAW TO CALL 811 AT LEAST 48 HOURS BEFORE YOU DIG SO THAT UNDERGROUND LINES CAN BE MARKED. THIS SIGNATURE DOES NOT FULFILL YOUR OBLIGATION TO CALL 811

VERIFICATION OF PRIVATE UTILITY LINES

Mike Brower 03/25/26
Date

CenterPoint Energy natural gas utilities shown. (Gas service lines are not shown). This signature not be used for conflict verification.
Signature valid for six months.

Mike Brower 03/25/26
Date

CenterPoint Energy/UNDERGROUND Electrical Facilities Verification ONLY.
(This signature verifies existing underground facilities – not to be used for conflict verification)
Signature valid for six months.

Chris Primrose 3/25/26
Date

Approved for AT&T underground conduit facilities only.
Signature valid for one year.

EJES INCORPORATED
Corporate Office
12801 North Central Expressway, Suite 700
Dallas, Texas 75243
(P) 214-343-1210
(F) 214-343-3885
Houston Office
6161 Savoy Drive, Suite 830
Houston, Tx. 77036
(P) 281-272-1612
(F) 281-272-1619
EJES, Inc. Copyright © 2017
FIRM REGISTRATION No. 2488

SURVEYED BY: AMANI ENGR.
FB NO. P-6335

STATE OF TEXAS
TANITA GILBERT ALEXANDER
88719
LICENSED PROFESSIONAL ENGINEER
3-20-26

FLOODPLAIN MANAGEMENT OFFICE

APPROVED
ILMS # 26023603
Development Permit #: 26-1091
Date: 03/20/2026 **By:**

CITY OF HOUSTON
HOUSTON PUBLIC WORKS

LIFT STATION REHABILITATION & RECONSTRUCTION CONSENT DECREE

SHADOW LAKES LIFT STATION SITE DEMOLITION PLAN

C-44

WBS NUMBER	FOR CITY OF HOUSTON USE ONLY
R-000267-0175-4	
DRAWING SCALE	
1"=10'	
CITY OF HOUSTON PM	
NP NAWARAJ PANTA, P.E.	
SHEET NO. 235 OF 312	

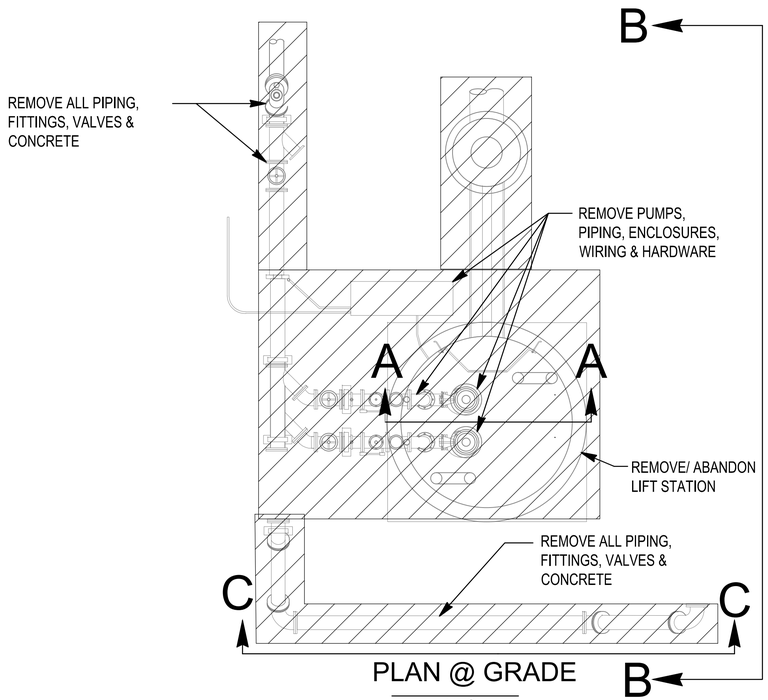

PLAN @ GRADE

NTS

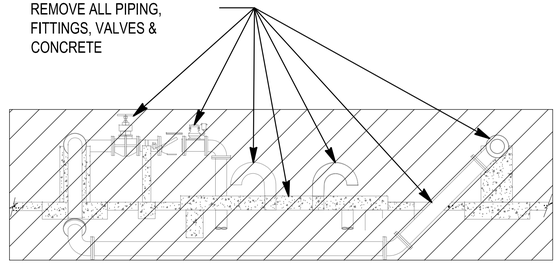

SECTION C-C

NTS

NOTE:
THE CITY OF HOUSTON HAS THE RIGHT OF FIRST REFUSAL OF ANY EQUIPMENT OR MATERIAL TO BE DEMOLISHED OR REMOVED. CONTACT THE CITY OF HOUSTON AT LEAST 72 HOURS PRIOR TO DEMOLITION WORK IN ORDER TO COORDINATE REMOVAL OF ANY ITEMS THE CITY WISHED TO CLAIM AS SALVAGE. THE CONTRACT SHALL DELIVER ALL SALVAGED ITEMS TO A LOCATION DETERMINED BY THE CITY. THE CONTRACTOR SHALL PROPERLY DISPOSE OF ALL OTHER ITEMS AND MATERIALS NOT INTENDED FOR SALVAGE.

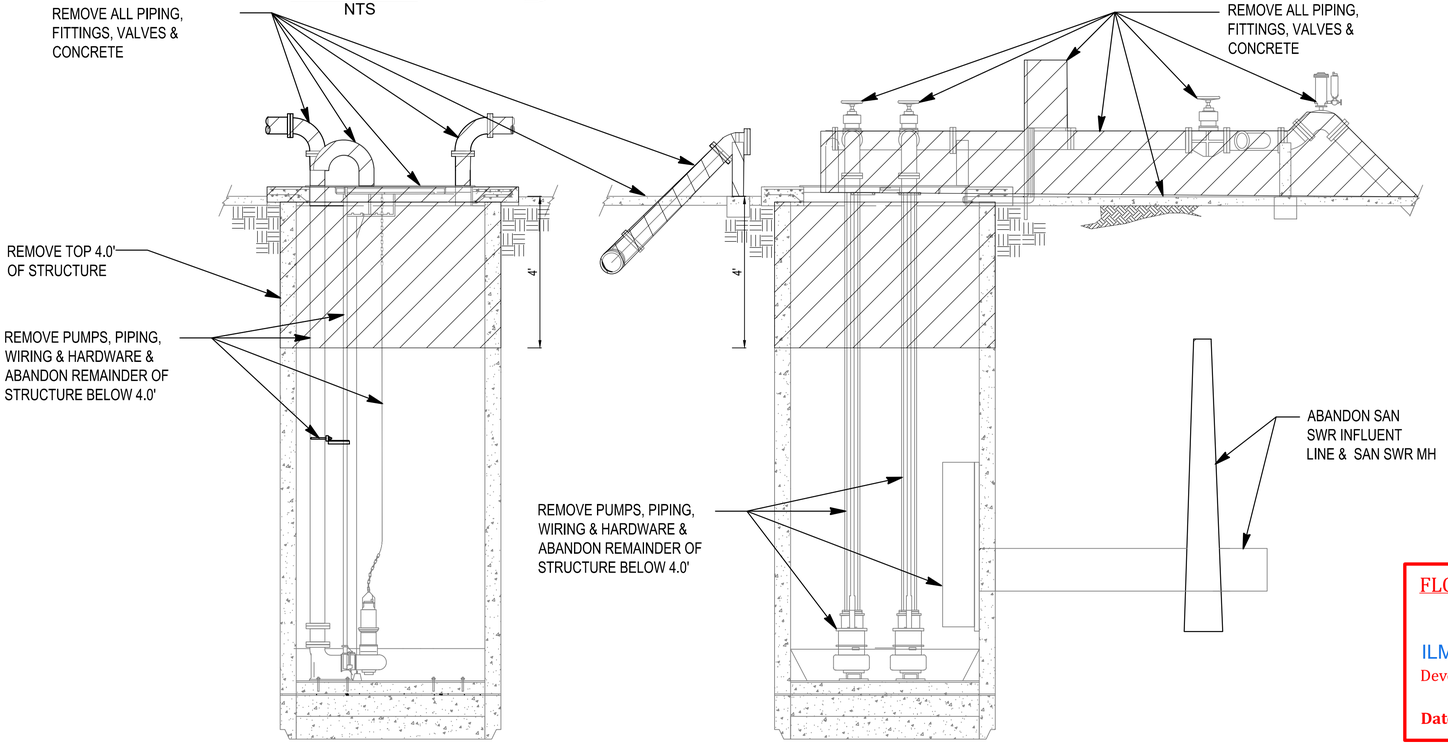

SECTION A-A

NTS

SECTION B-B

NTS

FLOODPLAIN MANAGEMENT OFFICE

APPROVED

ILMS # 26023603

Development Permit #: 26-1091

Date: 03/20/2026 **By:** Joan R. Digby

LIFT STATION DEMOLITION AND SALVAGE NOTES

1. DO NOT PROCEED WITH DEMOLITION OR REMOVAL UNTIL AUTHORIZED BY PROJECT MANAGER. NO DEMOLITION SHALL BE PERFORMED UNTIL BYPASS PUMPING IS OPERATIONAL.
2. PROVIDE SAFE WORKING CONDITIONS FOR EMPLOYEES THROUGHOUT DEMOLITION AND REMOVAL OPERATIONS. OBSERVE SAFETY REQUIREMENTS FOR WORK BELOW GRADE.
3. MAINTAIN SAFE ACCESS TO ADJACENT PROPERTY AND BUILDINGS. DO NOT OBSTRUCT ROADWAYS, SIDEWALKS OR PASSAGEWAYS ADJACENT TO THE WORK.
4. PERFORM DEMOLITION IN A MANNER TO PREVENT DAMAGE TO ADJACENT PROPERTY. REPAIR DAMAGE TO CITY PROPERTY OR ADJACENT PROPERTY AND FACILITIES.
5. THE CONTRACTOR SHALL BE RESPONSIBLE FOR SAFETY AND INTEGRITY OF ADJACENT STRUCTURE AND SHALL BE LIABLE FOR ANY DAMAGE DUE TO MOVEMENT OR SETTLEMENT. PROVIDED PROPER FRAMING AND SHORING NECESSARY FOR SUPPORT. CEASE OPERATIONS IF AN ADJACENT STRUCTURE APPEARS TO BE ENDANGERED. RESUME DEMOLITION ONLY AFTER PROPER PROTECTIVE MEASURES HAVE BEEN TAKEN.
6. NOTIFY AND COORDINATE WITH UTILITY COMPANY AND ADJACENT BUILDING OCCUPANTS WHEN TEMPORARY INTERRUPTION OF UTILITY SERVICE IS NECESSARY.
7. REMOVE REMAINING SLUDGE, SOLIDS, AND MATERIALS FROM WET WELL AND RINSE/CLEAN INTERIOR PRIOR TO BACKFILL OPERATIONS.
8. DEMOLITION CONCRETE LIFT STATION STRUCTURES, CONCRETE SLABS, AND WALLS TO A MINIMUM OF 4 FEET BELOW FINISHED GRADE.
9. REMOVE ALL PIPING, WIRING, CONDUITS, DUCTWORK AND OTHER MISCELLANEOUS ITEMS TO CONCRETE SURFACES.
10. BACKFILL AND COMPACT ENTIRE LIFT STATION STRUCTURE WITH FILL WITH SUITABLE BACKFILL MATERIAL UP TO THE SURFACE TO 90% COMPACTION. C-SAND ONLY NECESSARY IF BACKFILLING UNDER PAVEMENT.
11. DO NOT BACKFILL WITH MATERIAL FROM DEMOLITION UNLESS APPROVED BY PROJECT MANAGER.
12. CUT 6 QTY – 6" EQUALLY SPACED OPENINGS IN BOTTOM OF LIFT STATION SLAB. CUT OPENINGS CLEAR THROUGH SLAB FOR UNOBSTRUCTED OPENING TO SOILS UNDERNEATH. BACKFILL OPENING WITH CLEAN GRAVEL OR ROCK.
13. ALL OPENINGS BELOW THE REMOVED WALLS SHALL BE SEALED WITH NON-SHRINK GROUT.
14. CONTRACTOR TO OBTAIN ALL NECESSARY PERMITS (INCLUDING DEMOLISH PERMITS, COH FORM NO. CE-1075 & TEXAS DSHS FORM APB#5) REQUIRED. CONTRACTOR SHALL COORDINATE DISCONNECT WITH CENTERPOINT ENERGY TO ELECTRICAL POWER.
15. THE CITY OF HOUSTON HAS THE FIRST RIGHT OF REFUSAL OF ANY EQUIPMENT OR MATERIAL REMOVED. CONTACT CITY PROJECT MANAGER AL LEAST 72 HOUR PRIOR TO DEMOLITION IN ORDER TO COORDINATE REMOVAL OF ANY ITEMS THE CITY WISHES TO CLAIM AS SALVAGE. THE CONTRACTOR SHALL DELIVER ALL SALVAGED ITEMS TO A LOCATION, WITHIN THE CITY, DETERMINED BY THE CITY. THE CONTRACTOR SHALL PROPERLY DISPOSE OFF ALL OTHER EQUIPMENT AND MATERIAL NOT IDENTIFIED FOR SALVAGE.
16. THE EXISTING WET WELL SHALL BE CLEANED OF ALL DEBRIS, WASTEWATER, AND OTHER RESIDUES.
17. THE CONTRACTOR SHALL DISPOSE OF ANY LIQUID OR SOLID WASTE FOUND IN THE WET WELL AT A DISPOSAL FACILITY LICENSED & APPROVED BY THE STATE OF TEXAS. THE CONTRACTOR SHALL BE RESPONSIBLE FOR THE COST OF TRANSPORTATION, DISPOSAL & TESTING REQUIRED BY STATE & FEDERAL REGULATORY AGENCIES & BY THE DISPOSAL FACILITY.
18. CONTRACTOR TO COORDINATE WITH CENTERPOINT ENERGY ON REMOVAL OF POWER LINES FROM SERVICE POLE TO ELECTRICAL POLE.

LEGEND

AREA TO BE REMOVED

NO	DATE	REVISION	APPROVED

NOTICE:
FOR YOUR SAFETY, YOU ARE REQUIRED BY TEXAS LAW TO CALL 811 AT LEAST 48 HOURS BEFORE YOU DIG SO THAT UNDERGROUND LINES CAN BE MARKED. THIS SIGNATURE DOES NOT FULFILL YOUR OBLIGATION TO CALL 811

VERIFICATION OF PRIVATE UTILITY LINES

N/A Date

CenterPoint Energy natural gas utilities shown. (Gas service lines are not shown). This signature not be used for conflict verification.

Signature valid for six months.

N/A Date

CenterPoint Energy/UNDERGROUND Electrical Facilities Verification ONLY.
(This signature verifies existing underground facilities – not to be used for conflict verification)

Signature valid for six months.

Date

Approved for AT&T underground conduit facilities only.
Signature valid for one year.

EJES INCORPORATED
Corporate Office
12801 North Central Expressway, Suite 700
Dallas, Texas 75243
(P) 214-343-1210
(F) 214-343-3885
Houston Office
6161 Savoy Drive, Suite 830
Houston, Tx. 77036
(P) 281-272-1612
(F) 281-272-1619
EJES, Inc. Copyright © 2017
FIRM REGISTRATION No. 2488

SURVEYED BY: AMANI ENGR.
FB NO. P-6335

STATE OF TEXAS
TANITA GILBERT ALEXANDER
88719
LICENSED PROFESSIONAL ENGINEER
3-20-26

CITY OF HOUSTON
HOUSTON PUBLIC WORKS

LIFT STATION REHABILITATION & RECONSTRUCTION CONSENT DECREE

SHADOW LAKES LIFT STATION RESERVED – DEMOLITION PLAN AND SECTION
C-45

WBS NUMBER	FOR CITY OF HOUSTON USE ONLY
R-000267-0175-4	
DRAWING SCALE	
NTS	
CITY OF HOUSTON PM	
NP NAWARAJ PANTA, P.E.	
SHEET NO. 236 OF 312	

BL STA 9+45 (13.8' RT)=
DIVERSION LINE #2, STA 0+07
EXST SAN SWR MH
GIS#:UB230057
RIM=77.37
PROP FL 8"=61.00 (OUT-SW)
FL 12"=61.18 (OUT-N)
FL 12"=61.23 (IN-S)
FL 8"=64.13 (IN-W)
PLUG & ABANDON EX 12" SAN SWR (N&S)

MANHOLE NO. 3
BL STA 14+40 (5' RT)=
DIVERSION LINE #3, STA 0+00
PROP 5' DIA PRECAST CORROSION RESISTANT
SAN SWR MH W/8" DROP CONNECTION
RIM=77.50
PROP FL 8"=59.90 (IN-NE)
PROP FL 24"=54.19 (IN-N)
PROP FL 24"=54.18 (OUT-S)

MANHOLE NO. 4
BL STA 17+27.70 (5.4' RT)
PROP 5' DIA PRECAST CORROSION RESISTANT
SAN SWR MH W/18" DROP CONNECTION
CUT & PLUG EX 18" SAN SWR (E)
RIM=78.73
FL 18"=58.60 (IN-W)
PROP FL 24"=54.50 (OUT-S)

EXST SAN SWR MH
GIS#:UB230101

MANHOLE NO. 2
BL STA 9+37 (6.3' RT)=
DIVERSION LINE #2, STA 0+00
PROP 5' DIA PRECAST CORROSION RESISTANT
SAN SWR MH W/8" DROP CONNECTION
RIM=77.61
PROP FL 8"=60.60 (IN-NE)
PROP FL 24"=53.63 (IN-N)
PROP FL 24"=53.63 (OUT-S)
PROVIDE VENT PIPING TO EAST PARKWAY (17')

PROPOSED 1360 LF 24" FRP SANITARY SEWER
@ 0.11% (BY TRENCHLESS METHODS)

BL STA 7+73 (14.15' RT)
EXST SAN SWR MH "TO BE ABANDONED"
GIS#:UB230073
RIM=77.80
EXST FL 12" SS=61.67 (OUT-N)
EXST FL 12" SS=61.69 (IN-S)
PLUG & ABANDON EX 12" SAN SWR (N&S)

EXISTING SHADOW LAKES
LIFT STATION TO BE
ABANDONED

BL STA 17+27 (12.65' RT)
EXST SAN SWR MH "TO BE ABANDONED"
RIM=78.21
GIS#:UB230002
FL 24"=58.17 (OUT-E)
FL 18"=58.53 (IN-W)
FL 12"=58.61 (IN-S)
PLUG & ABANDON EXST 24", 18", & 12"
SAN SWR

BL STA 6+02 (13.4' RT)
EXST SAN SWR MH "TO BE ABANDONED"
GIS#:UB230074
RIM=77.15
FL 12"=62.05 (OUT-N)
FL 12"=62.13 (IN-S)
PLUG & ABANDON EX 12" SAN SWR (N&S)

BL STA 5+26=
DIVERSION LINE #1, STA 0+07
EXST SAN SWR MH
GIS#:UB230075
RIM=78.86
PROP FL 12"=62.00 (OUT-E)
FL 12"=62.33 (OUT-N)
FL 12"=62.35 (IN-S)
PLUG & ABANDON EX 12" SAN SWR (N)

BL STA 12+00 (12.7' RT)
EXST SAN SWR MH "TO BE ABANDONED"
RIM=78.21
GIS#:UB230056
FL 12"=60.69 (OUT-N)
FL 12"=60.84 (IN-S)
PLUG & ABANDON EXST 12" SAN SWR (N&S)

BL STA 14+62 (13.92' RT)=
DIVERSION LINE #3, STA 0+21
EXST SAN SWR MH
GIS#:UB230003
RIM=77.52
PROP FL 8"=60.10 (OUT-SW)
FL 12"=60.12 (OUT-N)
FL 12"=60.14 (IN-S)
FL 8"=60.20 (IN-E)
FL 8"=60.13 (IN-W)
FL 8"=63.90 (IN-W)
PLUG & ABANDON EX 12" SAN SWR (N&S)

EXISTING 10" SANITARY SEWER
FORCE MAIN TO BE ABANDONED

EXISTING 12" SANITARY SEWER
TO BE ABANDONED

MANHOLE NO. 1
BL STA 5+26 (10' RT)=
DIVERSION LINE #1, STA 0+00
PROP 5' DIA PRECAST CORROSION RESISTANT
SAN SWR MH W/12"
DROP CONNECTION (DIVERSION LINE #1)
RIM=77.86
PROP FL 12"=62.00 (IN-W)
PROP FL 24"=53.18 (IN-N)
PROP FL 24"=53.18 (OUT-S)

BL STA 3+67.42 (22' RT)
EXST 10' DIA PRECAST POLYMER SAN SWR MH
RIM=77.72
GIS#:UB8043216
FL 48"=25.76 (OUT-SE)
PROP FL 24"=53.01 (IN-N)
INSTALL VORTEX FLOW INSERT

FLOODPLAIN MANAGEMENT OFFICE

APPROVED

ILMS # 26023603

Development Permit #: 26-1091

Date: 03/20/2026 **By:** Ivan A. Dias

NOTE:

100-YEAR BFE = 77 FEET
500-YEAR BFE = 78.4 FEET
SOURCE: FEMA FLOOD PROFILES
D-100-00-00 (BRAYS BAYOU)-D06P
FEMA MAP NO.: 48201C0830L

0' 25' 50' 100'
SCALE: 1"=50'

LEGEND

AREA TO BE ABANDONED

BENCHMARK:

STATIC GPS OBSERVATION OF CITY OF HOUSTON MONUMENT 4855-7914 MADE ON 08/01/2024. A BRASS DISK LOCATED ON SOUTHSIDE OF WESTPARK APPROXIMATELY 0.24 MILES WEST OF W. HOUSTON CENTER BLVD.
ELEVATION: 70.96' (NAVD 88 GEOID 18)

NO	DATE	REVISION	APPROVED

NOTICE:
FOR YOUR SAFETY, YOU ARE REQUIRED BY TEXAS LAW TO CALL 811 AT LEAST 48 HOURS BEFORE YOU DIG SO THAT UNDERGROUND LINES CAN BE MARKED. THIS SIGNATURE DOES NOT FULFILL YOUR OBLIGATION TO CALL 811

VERIFICATION OF PRIVATE UTILITY LINES

Mike Brower 03/25/26
Date

CenterPoint Energy natural gas utilities shown. (Gas service lines are not shown). This signature not be used for conflict verification.

Signature valid for six months.

Mike Brower 03/25/26
Date

CenterPoint Energy/UNDERGROUND Electrical Facilities Verification ONLY.
(This signature verifies existing underground facilities – not to be used for conflict verification)

Signature valid for six months.

Chris Primrose 3/25/26
Date

Approved for AT&T underground conduit facilities only.
Signature valid for one year.

EJES INCORPORATED
Corporate Office
12801 North Central Expressway, Suite 700
Dallas, Texas 75243
(P) 214-343-1210
(F) 214-343-3885
Houston Office
6161 Savoy Drive, Suite 830
Houston, Tx. 77036
(P) 281-272-1612
(F) 281-272-1619
EJES, Inc. Copyright © 2017
FIRM REGISTRATION No. 2488

SURVEYED BY: AMANI ENGR.
FB NO. P-6335

STATE OF TEXAS
TANITA GILBERT ALEXANDER
88719
LICENSED
PROFESSIONAL ENGINEER
3-20-26

CITY OF HOUSTON
HOUSTON PUBLIC WORKS

LIFT STATION REHABILITATION & RECONSTRUCTION CONSENT DECREE

SHADOW LAKES LIFT STATION
SHADOWBRIAR DRIVE – SITE PLAN

C-46

WBS NUMBER	FOR CITY OF HOUSTON USE ONLY
R-000267-0175-4	
DRAWING SCALE	
1"=50'	
CITY OF HOUSTON PM	
NP NAWARAJ PANTA, P.E.	
SHEET NO. 237 OF 312	

FLOODPLAIN MANAGEMENT OFFICE
APPROVED
ILMS # 26023603
Development Permit #: 26-1091
Date: 03/20/2026 By:

BL STA 3+67.42 (22' RT)=
EXST 10' DIA SAN SEW MH
RIM=77.72
FL 48"=25.76 (OUT-SE)
PROP FL 24"=53.01 (IN-N)
INSTALL VORTEX FLOW INSERT
SEE DETAIL DWGS
N=13828129.87
E=3048028.70

BL STA 5+26=
DIVERSION LINE #1, STA 0+07
EX SAN SEW MH
RIM=78.86
PROP FL 12"=62.20 (OUT-E)
FL 12"=62.33 (OUT-N)
FL 12"=62.35 (IN-S)
PLUG & ABANDON EX 12" SAN SWR (N)
N=13828277.64
E=3047966.66
7 LF 12" SAN SWR @ 2.86%

CLEAN, GROUT FILL & ABANDON
12" DIA. SAN SEW PER COH
SPEC 02222

WESTPARK DR

SHADOWBRIAR DR

MANHOLE
NO. 1

REPLACE CURB & GUTTER (65 LF)
RESTORE MEDIAN W/BLOCK SOD (28 SY)

MH ID:
UB230076

SURVEY
BASELINE

EX SAN SWR MH

MH ID: 8043216

MH ID:
UB230031

MH ID:
UB230074

PROP 159 LF 24" FRP SAN SWR @
0.11% (BY TRENCHLESS METHOD)

PROP 174 LF 24" FRP SAN SWR @
0.11% (BY TRENCHLESS METHOD)

EX SAN SWR MH (12" DIA)
BL STA 2+82 (90 RT)

APPROXIMATE LIMITS OF
CONCRETE PAVEMENT REPAIR

1055' To Exst San Swr MH = Beginning
of Exst 18" SS (Gravity Main)
Abandon Exst 10" San Swr FM To This
Point

APPROXIMATE LIMITS
OF CONCRETE
PAVEMENT REPAIR

EXST 10" SAN SEW FM
TO BE ABANDONED
PER COH SPEC 02222

BL STA 5+26 (10.0' RT) =
DIVERSION LINE #1, STA 0+00
PROP 5' DIA PRECAST CORROSION RESISTANT
SAN SEW MH W/12"
DROP CONNECTION (DIVERSION LINE #1)
RIM=77.86
PROP FL 12"=62.00 (IN-W)
PROP FL 24"=53.18 (IN-N)
PROP FL 24"=53.18 (OUT-S)
N=13828280.24
E=3047976.67

BL STA 6+02 (13.4 RT)
EX SAN SEW MH
"TO BE ABANDONED"
RIM=77.15
FL 12"=62.05 (OUT-N)
FL 12"=62.13 (IN-S)
PLUG & ABANDON EX 12" SAN SWR (N&S)
N=13828354.41
E=3047960.10

MATCH LINE STA. 7+00

0' 10' 20' 40'
SCALE: 1"=20'

BENCHMARK:

STATIC GPS OBSERVATION OF CITY OF HOUSTON MONUMENT 4855-7914 MADE ON 08/01/2024. A BRASS DISK LOCATED ON SOUTHSIDE OF WESTPARK APPROXIMATELY 0.24 MILES WEST OF W. HOUSTON CENTER BLVD.
ELEVATION: 70.96' (NAVD 88 GEOID 18)

NO	DATE	REVISION	APPROVED

NOTICE:
FOR YOUR SAFETY, YOU ARE REQUIRED BY TEXAS LAW TO CALL 811 AT LEAST 48 HOURS BEFORE YOU DIG SO THAT UNDERGROUND LINES CAN BE MARKED. THIS SIGNATURE DOES NOT FULFILL YOUR OBLIGATION TO CALL 811

VERIFICATION OF PRIVATE UTILITY LINES

Mike Brower 03/25/26
Date

CenterPoint Energy natural gas utilities shown. (Gas service lines are not shown). This signature not be used for conflict verification.
Signature valid for six months.

Mike Brower 03/25/26
Date

CenterPoint Energy/UNDERGROUND Electrical Facilities Verification ONLY.
(This signature verifies existing underground facilities – not to be used for conflict verification)
Signature valid for six months.

Chris Primrose 3/25/26
Date

Approved for AT&T underground conduit facilities only.
Signature valid for one year.

EJES INCORPORATED
Corporate Office
12801 North Central Expressway, Suite 700
Dallas, Texas 75243
(P) 214-343-1210
(F) 214-343-3885
Houston Office
6330 Savoy Drive, Suite 800
Houston, Tx. 77036
(P) 281-272-1612
(F) 281-272-1619
EJES, Inc. Copyright © 2017
FIRM REGISTRATION No. 2488

SURVEYED BY: AMANI ENGR.
FB NO. P-6335

STATE OF TEXAS
TANITA GILBERT ALEXANDER
88719
LICENSED
PROFESSIONAL ENGINEER
3-20-26

CITY OF HOUSTON
HOUSTON PUBLIC WORKS

LIFT STATION REHABILITATION & RECONSTRUCTION CONSENT DECREE

SHADOW LAKES LIFT STATION
SHADOWBRIAR DRIVE PLAN
STA 2+00 TO 7+00
C-47

WBS NUMBER	FOR CITY OF HOUSTON USE ONLY
R-000267-0175-4	
DRAWING SCALE	
1"=20'	
CITY OF HOUSTON PM	
NP NAWARAJ PANTA, P.E.	
SHEET NO. 238 OF 312	

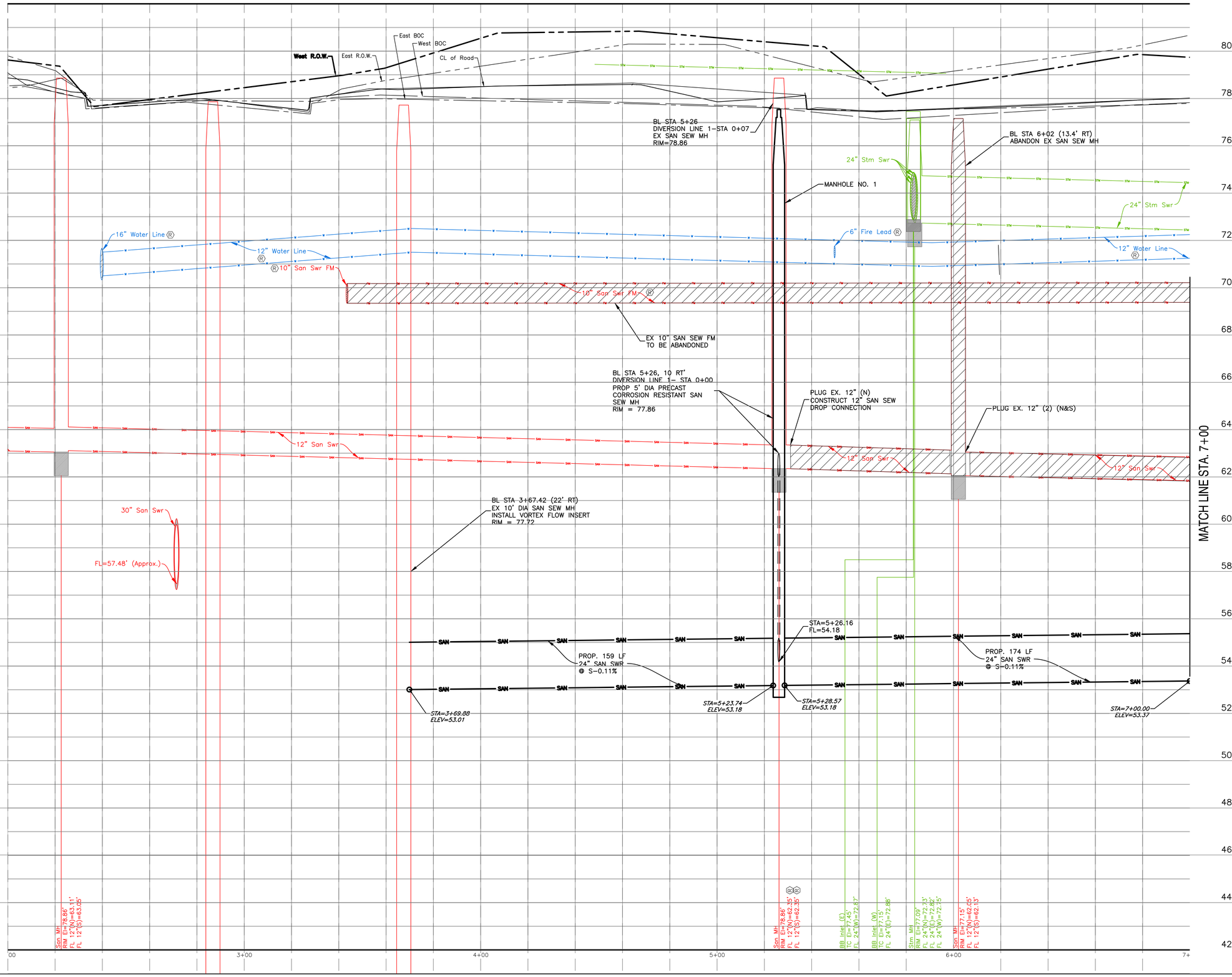

0' 10' 20' 40'

SCALE: 1"=20'

FLOODPLAIN MANAGEMENT OFFICE

APPROVED

ILMS # 26023603

Development Permit #: 26-1091

Date: 03/20/2026 By: Juan A. Diaz

BENCHMARK:

STATIC GPS OBSERVATION OF CITY OF HOUSTON MONUMENT 4855–7914 MADE ON 08/01/2024. A BRASS DISK LOCATED ON SOUTHSIDE OF WESTPARK APPROXIMATELY 0.24 MILES WEST OF W. HOUSTON CENTER BLVD.
ELEVATION: 70.96' (NAVD 88 GEOID 18)

NO	DATE	REVISION	APPROVED

NOTICE:
FOR YOUR SAFETY, YOU ARE REQUIRED BY TEXAS LAW TO CALL 811 AT LEAST 48 HOURS BEFORE YOU DIG SO THAT UNDERGROUND LINES CAN BE MARKED. THIS SIGNATURE DOES NOT FULFILL YOUR OBLIGATION TO CALL 811

VERIFICATION OF PRIVATE UTILITY LINES

Mike Brower 03/25/26
Date

CenterPoint Energy natural gas utilities shown. (Gas service lines are not shown). This signature not be used for conflict verification.
Signature valid for six months.

Mike Brower 03/25/26
Date

CenterPoint Energy/UNDERGROUND Electrical Facilities Verification ONLY.
(This signature verifies existing underground facilities – not to be used for conflict verification)
Signature valid for six months.

Chris Primrose 3/25/26
Date

Approved for AT&T underground conduit facilities only.
Signature valid for one year.

EJES INCORPORATED
Corporate Office
12801 North Central Expressway, Suite 700
Dallas, Texas 75243
(P) 214-343-1210
(F) 214-343-3885
Houston Office
6161 Savoy Drive, Suite 830
Houston, Tx. 77036
(P) 281-272-1612
(F) 281-272-1619
EJES, Inc. Copyright © 2017
FIRM REGISTRATION No. 2488

SURVEYED BY: AMANI ENGR.
FB NO. P-6335

STATE OF TEXAS
TANITA GILBERT ALEXANDER
88719
LICENSED
PROFESSIONAL ENGINEER
3-20-26

CITY OF HOUSTON
HOUSTON PUBLIC WORKS

LIFT STATION REHABILITATION & RECONSTRUCTION CONSENT DECREE

SHADOW LAKES LIFT STATION
SHADOWBRIAR DRIVE PROFILE
STA 2+00 TO 7+00
C–48

WBS NUMBER	FOR CITY OF HOUSTON USE ONLY
R–000267–0175–4	
DRAWING SCALE	
1"=20'	
CITY OF HOUSTON PM	
NP NAWARAJ PANTA, P.E.	
SHEET NO. 239 OF 312	

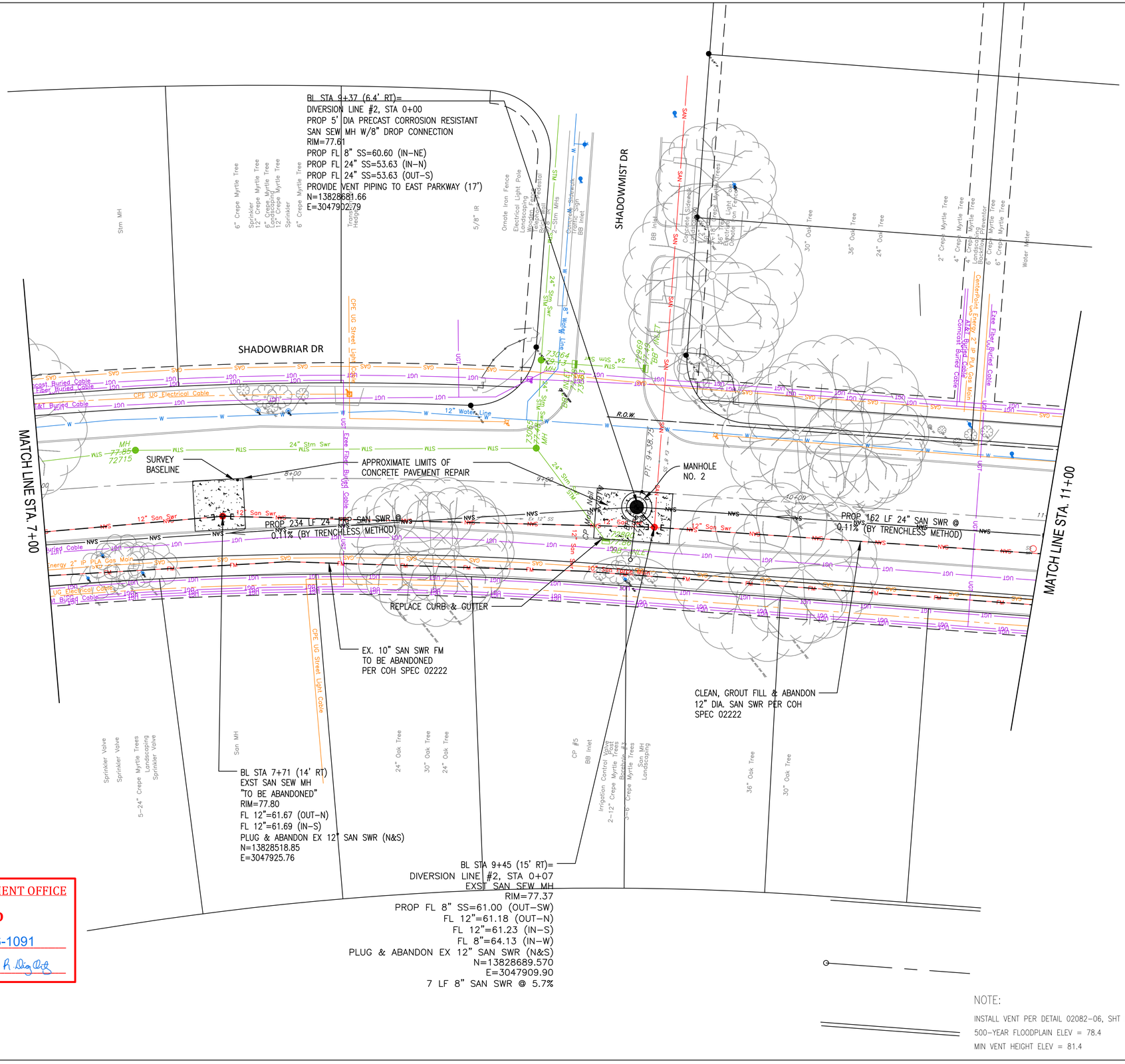

BENCHMARK:

STATIC GPS OBSERVATION OF CITY OF HOUSTON MONUMENT 4855-7914 MADE ON 08/01/2024. A BRASS DISK LOCATED ON SOUTHSIDE OF WESTPARK APPROXIMATELY 0.24 MILES WEST OF W. HOUSTON CENTER BLVD.
ELEVATION: 70.96' (NAVD 88 GEOID 18)

NO	DATE	REVISION	APPROVED

NOTICE:
FOR YOUR SAFETY, YOU ARE REQUIRED BY TEXAS LAW TO CALL 811 AT LEAST 48 HOURS BEFORE YOU DIG SO THAT UNDERGROUND LINES CAN BE MARKED. THIS SIGNATURE DOES NOT FULFILL YOUR OBLIGATION TO CALL 811

VERIFICATION OF PRIVATE UTILITY LINES

Mike Brower 03/25/26
Date

CenterPoint Energy natural gas utilities shown. (Gas service lines are not shown). This signature not be used for conflict verification.
Signature valid for six months.

Mike Brower 03/25/26
Date

CenterPoint Energy/UNDERGROUND Electrical Facilities Verification ONLY.
(This signature verifies existing underground facilities – not to be used for conflict verification)
Signature valid for six months.

Chris Primrose 3/25/26
Date

Approved for AT&T underground conduit facilities only.
Signature valid for one year.

EJES INCORPORATED
Corporate Office
12801 North Central Expressway, Suite 700
Dallas, Texas 75243
(P) 214-343-1210
(F) 214-343-3885
Houston Office
6161 Savoy Drive, Suite 830
Houston, Tx. 77036
(P) 281-272-1612
(F) 281-272-1619
EJES, Inc. Copyright © 2017
FIRM REGISTRATION No. 2488

SURVEYED BY: AMANI ENGR.
FB NO. P-6335

STATE OF TEXAS
TANITA GILBERT ALEXANDER
88719
LICENSED PROFESSIONAL ENGINEER
3-20-26

CITY OF HOUSTON
HOUSTON PUBLIC WORKS

LIFT STATION REHABILITATION & RECONSTRUCTION CONSENT DECREE

SHADOW LAKES LIFT STATION
SHADOWBRIAR DRIVE PLAN
STA 7+00 TO 11+00
C-49

WBS NUMBER	FOR CITY OF HOUSTON USE ONLY
R-000267-0175-4	
DRAWING SCALE	
1"=20'	
CITY OF HOUSTON PM	
NP NAWARAJ PANTA, P.E.	
SHEET NO. 240 OF 312	

FLOODPLAIN MANAGEMENT OFFICE

APPROVED
ILMS # 26023603
Development Permit #: 26-1091
Date: 03/20/2026 **By:** Juan A. Diaz Alg

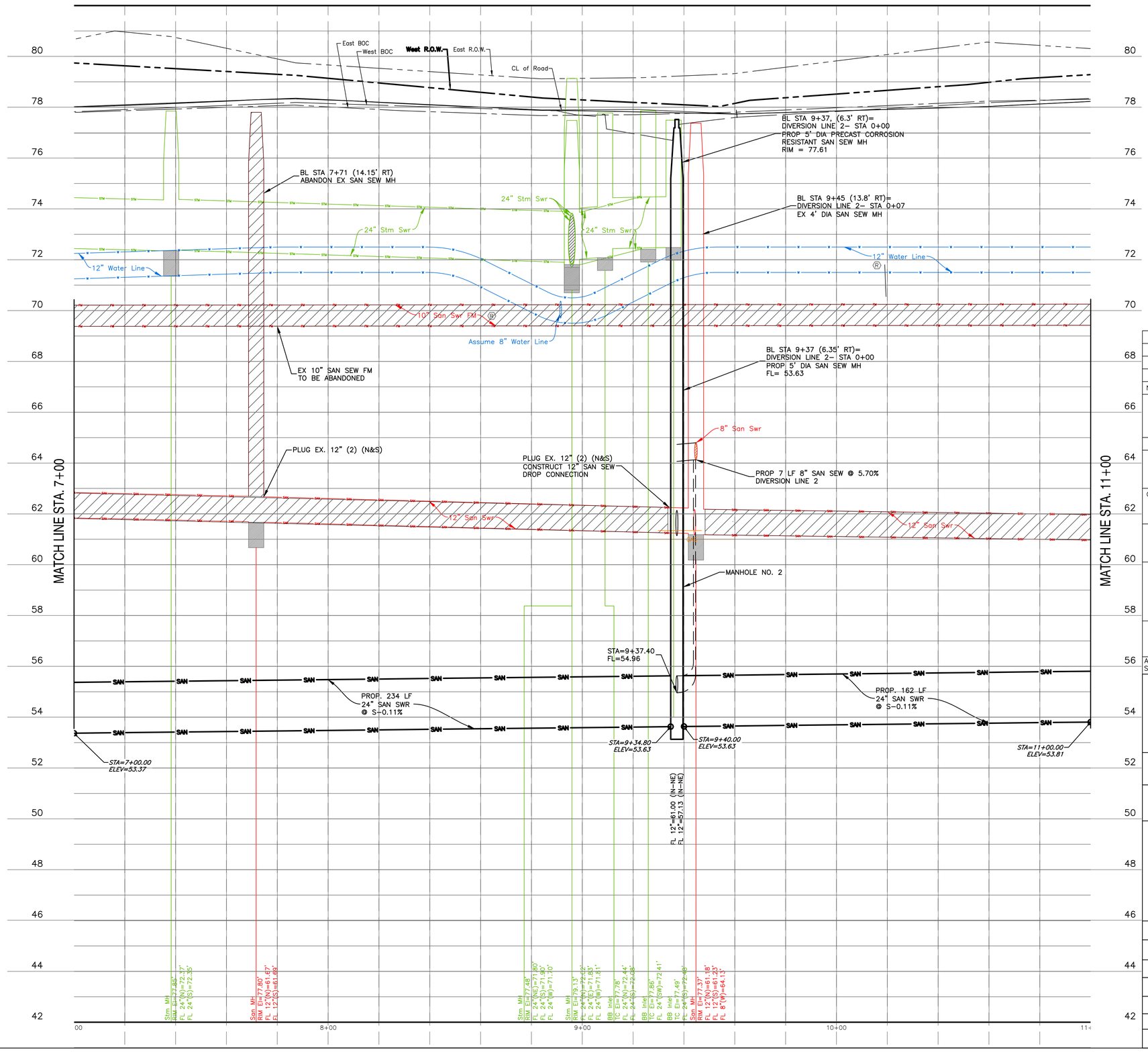

0' 10' 20' 40'

SCALE: 1"=20'

FLOODPLAIN MANAGEMENT OFFICE

APPROVED

ILMS # 26023603

Development Permit #: 26-1091

Date: 03/20/2026 By:

BENCHMARK:

STATIC GPS OBSERVATION OF CITY OF HOUSTON MONUMENT 4855-7914 MADE ON 08/01/2024. A BRASS DISK LOCATED ON SOUTHSIDE OF WESTPARK APPROXIMATELY 0.24 MILES WEST OF W. HOUSTON CENTER BLVD.
ELEVATION: 70.96' (NAVD 88 GEOID 18)

NO	DATE	REVISION	APPROVED

NOTICE:
FOR YOUR SAFETY, YOU ARE REQUIRED BY TEXAS LAW TO CALL 811 AT LEAST 48 HOURS BEFORE YOU DIG SO THAT UNDERGROUND LINES CAN BE MARKED. THIS SIGNATURE DOES NOT FULFILL YOUR OBLIGATION TO CALL 811

VERIFICATION OF PRIVATE UTILITY LINES

Mike Brower 03/25/26
Date

CenterPoint Energy natural gas utilities shown. (Gas service lines are not shown). This signature not be used for conflict verification.
Signature valid for six months.

Mike Brower 03/25/26
Date

CenterPoint Energy/UNDERGROUND Electrical Facilities Verification ONLY.
(This signature verifies existing underground facilities – not to be used for conflict verification)
Signature valid for six months.

Chris Primrose 3/25/26
Date

Approved for AT&T underground conduit facilities only.
Signature valid for one year.

EJES INCORPORATED
Corporate Office
12801 North Central Expressway, Suite 700
Dallas, Texas 75243
(P) 214-343-1210
(F) 214-343-3885
Houston Office
6161 Savoy Drive, Suite 830
Houston, Tx. 77036
(P) 281-272-1612
(F) 281-272-1619
EJES, Inc. Copyright © 2017
FIRM REGISTRATION No. 2488

SURVEYED BY: AMANI ENGR.
FB NO. P-6335

STATE OF TEXAS
TANITA GILBERT ALEXANDER
88719
LICENSED
PROFESSIONAL ENGINEER
3-20-26

CITY OF HOUSTON
HOUSTON PUBLIC WORKS

LIFT STATION REHABILITATION & RECONSTRUCTION
CONSENT DECREE

SHADOW LAKES LIFT STATION
SHADOWBRIAR DRIVE PROFILE
STA 7+00 TO 11+00

C-50

WBS NUMBER	FOR CITY OF HOUSTON USE ONLY
R-000267-0175-4	
DRAWING SCALE	
1"=20'	
CITY OF HOUSTON PM	
NP NAWARAJ PANTA, P.E.	
SHEET NO. 241 OF 312	

MATCH LINE STA. 11+00

MATCH LINE STA. 16+00

HAZYGLEN DR

SHADOWKNOLL DR

SHADOWBRIAR DR

SHADOWBARK DR (50')

BL STA 14+40 (5.00' RT)=
DIVERSION LINE #3, STA 0+00
PROP 5' DIA PRECAST CORROSION RESISTANT
SAN SEW MH W/8" DROP CONNECTION
RIM=77.50
PROP FL 8"=59.90 (IN-NE)
PROP FL 24"=54.19 (IN-N)
PROP FL 24"=54.18 (OUT-S)
N=13829183.22
E=3047878.61

BL STA 14+62 (13.92' RT)=
DIVERRSION LINE #3, STA 0+21
EXST SAN SEW MH
RIM=77.52
PROP FL 8" SS=60.10 (OUT-SW)
FL 12"=60.12 (OUT-N)
FL 12"=60.14 (IN-S)
FL 8"=60.20 (IN-E)
FL 8"=60.13 (IN-W)
FL 8"=63.90 (IN-W)
PLUG & ABANDON EX 12" SAN SWR
(N&S)
N=13829206.33
E=3047886.46

MANHOLE
NO. 3

APPROXIMATE LIMITS OF
CONCRETE PAVEMENT REPAIR

SURVEY
BASELINE

MH ID:
UB230056

APPROXIMATE LIMITS OF
CONCRETE PAVEMENT REPAIR

PROP 340 LF 24" SAN SWR
@0.11% SLOPE (TRENCHLESS)

MH ID:
UB230003

PROP 161 LF 24" SAN SWR @
0.11% (BY TRENCHLESS METHOD)

REPLACE CURB & GUTTER

L=22.33', R=2030.00', A=000°37'49"
N02°53'02"W-22.33'

N02°34'02"W-569.94'

EXST 10" SAN SWR FM
TO BE ABANDONED
PER COH SPEC 02222

CLEAN, GROUT FILL & ABANDON
12" DIA. SAN SWR PER COH
SPEC 02222

BL STA 12+00 (12.7' RT)
EXST SAN SEW MH
"TO BE ABANDONED"
RIM=78.21
FL 12"=60.69 (OUT-N)
FL 12"=60.84 (IN-S)
PLUG & ABANDON EX 12" SAN SWR
(N&S)
N=13828944.36
E=3047897.31

BL STA 14+60 (14' RT)=
DIVERSION LINE 3- STA 0+24
PROP. 24 LF 8" SAN SWR @ 0.89%
BY OPEN CUT METHOD
PER COH SPEC. 02531

CAUTION!!!
EXISTING GAS MAIN
IN THIS AREA

FLOODPLAIN MANAGEMENT OFFICE

APPROVED
ILMS # 26023603
Development Permit #: 26-1091
Date: 03/20/2026 By:

N

0' 10' 20' 40'
SCALE: 1"=20'

BENCHMARK:

STATIC GPS OBSERVATION OF CITY OF HOUSTON MONUMENT 4855-7914 MADE ON 08/01/2024. A BRASS DISK LOCATED ON SOUTHSIDE OF WESTPARK APPROXIMATELY 0.24 MILES WEST OF W. HOUSTON CENTER BLVD.
ELEVATION: 70.96' (NAVD 88 GEOID 18)

NO	DATE	REVISION	APPROVED

NOTICE:
FOR YOUR SAFETY, YOU ARE REQUIRED BY TEXAS LAW TO CALL 811 AT LEAST 48 HOURS BEFORE YOU DIG SO THAT UNDERGROUND LINES CAN BE MARKED. THIS SIGNATURE DOES NOT FULFILL YOUR OBLIGATION TO CALL 811

VERIFICATION OF PRIVATE UTILITY LINES

Mike Brower 03/25/26
Date

CenterPoint Energy natural gas utilities shown. (Gas service lines are not shown). This signature not be used for conflict verification.

Signature valid for six months.

Mike Brower 03/25/26
Date

CenterPoint Energy/UNDERGROUND Electrical Facilities Verification ONLY.
(This signature verifies existing underground facilities – not to be used for conflict verification)

Signature valid for six months.

Chris Primrose 3/25/26
Date

Approved for AT&T underground conduit facilities only.
Signature valid for one year.

EJES
INCORPORATED
Corporate Office
12801 North Central Expressway, Suite 700
Dallas, Texas 75243
(P) 214-343-1210
(F) 214-343-3885
Houston Office
6161 Savoy Drive, Suite 830
Houston, Tx. 77036
(P) 281-272-1612
(F) 281-272-1619
EJES, Inc. Copyright © 2017
FIRM REGISTRATION No. 2488

SURVEYED BY: AMANI ENGR.
FB NO. P-6335

STATE OF TEXAS
TANITA GILBERT ALEXANDER
88719
LICENSED
PROFESSIONAL ENGINEER
3-20-26

CITY OF HOUSTON
HOUSTON PUBLIC WORKS

LIFT STATION REHABILITATION & RECONSTRUCTION
CONSENT DECREE

SHADOW LAKES LIFT STATION
SHADOWBRIAR DRIVE PLAN
STA 11+00 TO 16+00

C-51

WBS NUMBER	FOR CITY OF HOUSTON USE ONLY
R-000267-0175-4	
DRAWING SCALE	
1"=20'	
CITY OF HOUSTON PM	
NP NAWARAJ PANTA, P.E.	
SHEET NO. 242 OF 312	

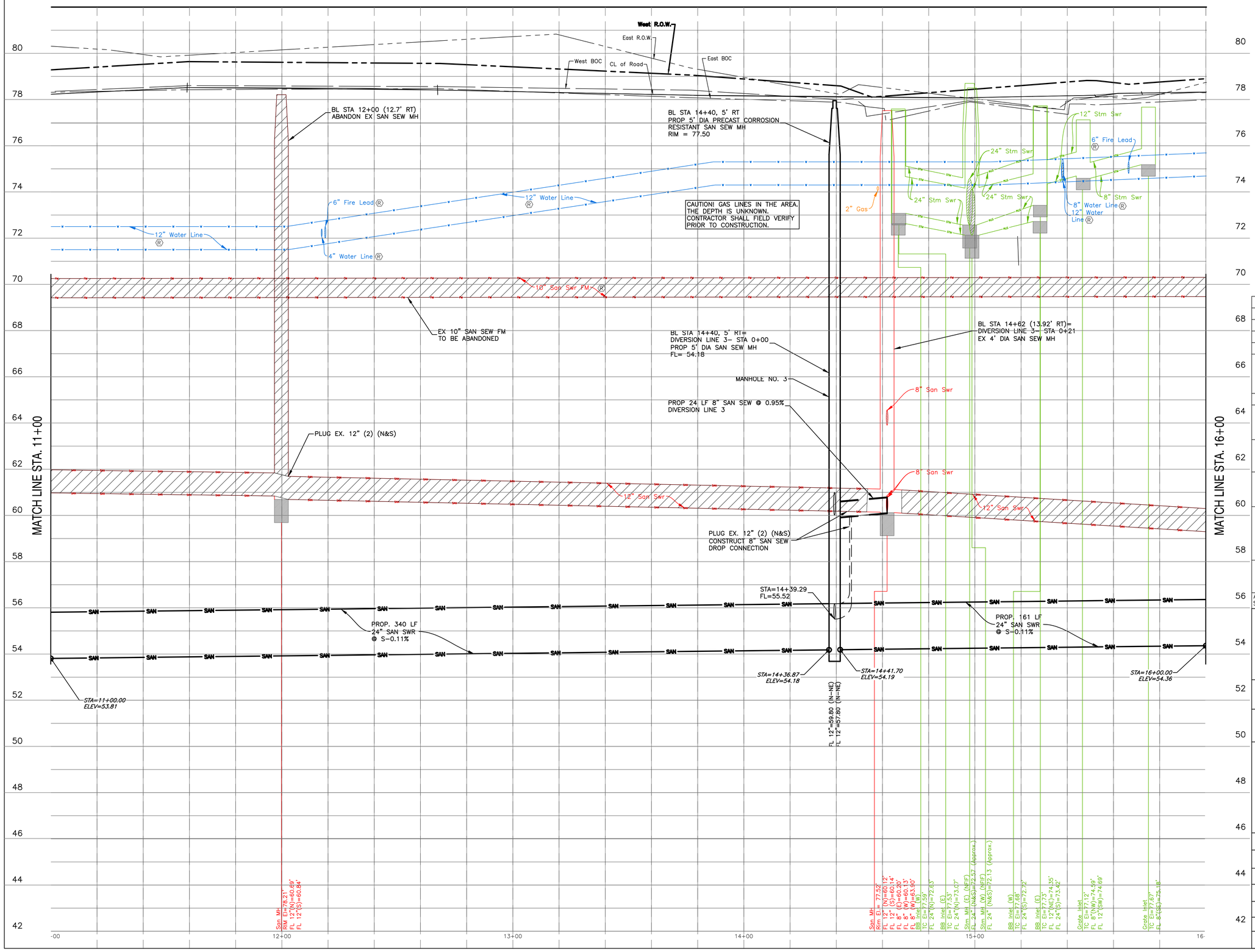

0' 10' 20' 40'

SCALE: 1"=20'

FLOODPLAIN MANAGEMENT OFFICE

APPROVED

ILMS # 26023603

Development Permit #: 26-1091

Date: 03/20/2026 **By:** Ivan R. Dias, P.E.

BENCHMARK:

STATIC GPS OBSERVATION OF CITY OF HOUSTON MONUMENT 4855-7914 MADE ON 08/01/2024. A BRASS DISK LOCATED ON SOUTHSIDE OF WESTPARK APPROXIMATELY 0.24 MILES WEST OF W. HOUSTON CENTER BLVD.
ELEVATION: 70.96' (NAVD 88 GEOID 18)

NO	DATE	REVISION	APPROVED

NOTICE:
FOR YOUR SAFETY, YOU ARE REQUIRED BY TEXAS LAW TO CALL 811 AT LEAST 48 HOURS BEFORE YOU DIG SO THAT UNDERGROUND LINES CAN BE MARKED. THIS SIGNATURE DOES NOT FULFILL YOUR OBLIGATION TO CALL 811

VERIFICATION OF PRIVATE UTILITY LINES

Mike Brower 03/25/26
Date

CenterPoint Energy natural gas utilities shown. (Gas service lines are not shown). This signature not be used for conflict verification.
Signature valid for six months.

Mike Brower 03/25/26
Date

CenterPoint Energy/UNDERGROUND Electrical Facilities Verification ONLY.
(This signature verifies existing underground facilities – not to be used for conflict verification)
Signature valid for six months.

Chris Primrose 3/25/26
Date

Approved for AT&T underground conduit facilities only.
Signature valid for one year.

EJES INCORPORATED
Corporate Office
12801 North Central Expressway, Suite 700
Dallas, Texas 75243
(P) 214-343-1210
(F) 214-343-3885

Houston Office
6161 Savoy Drive, Suite 820
Houston, Tx. 77036
(P) 281-272-1612
(F) 281-272-1619

EJES, Inc. Copyright © 2017
FIRM REGISTRATION No. 2488

SURVEYED BY: AMANI ENGR.
FB NO. P-6335

STATE OF TEXAS
TANITA GILBERT ALEXANDER
88719
LICENSED PROFESSIONAL ENGINEER
3-20-26

CITY OF HOUSTON
HOUSTON PUBLIC WORKS

LIFT STATION REHABILITATION & RECONSTRUCTION
CONSENT DECREE

SHADOW LAKES LIFT STATION
SHADOWBRIAR DRIVE PROFILE
STA 11+00 TO 16+00

C-52

WBS NUMBER	FOR CITY OF HOUSTON USE ONLY
R-000267-0175-4	
DRAWING SCALE	
1"=20'	
CITY OF HOUSTON PM	
NP NAWARAJ PANTA, P.E.	
SHEET NO. 243 OF 312	

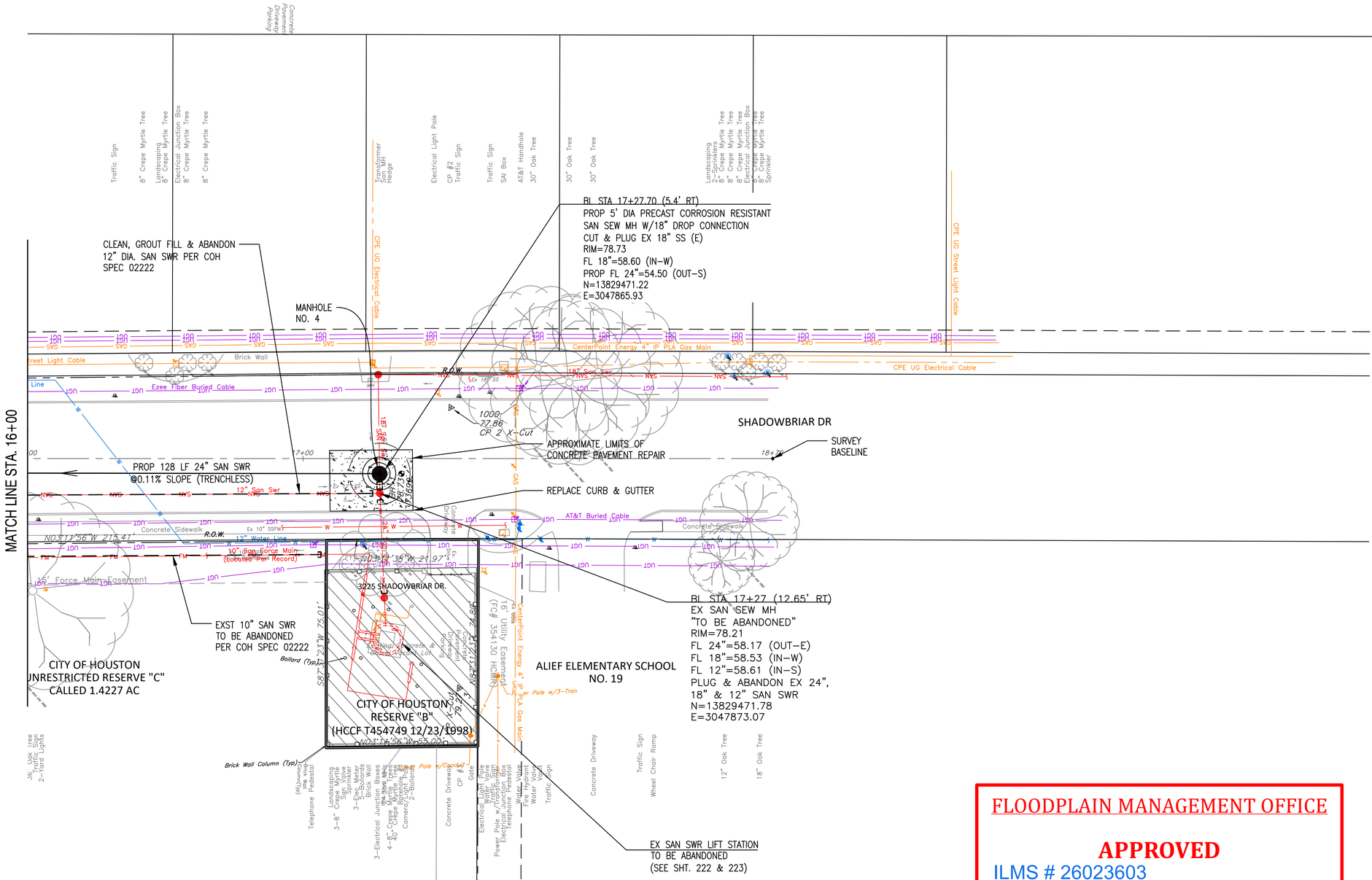
MATCH LINE STA. 16+00
CLEAN, GROUT FILL & ABANDON
12" DIA. SAN SWR PER COH
SPEC 02222
MANHOLE
NO. 4
BL STA 17+27.70 (5.4' RT)
PROP 5' DIA PRECAST CORROSION RESISTANT
SAN SEW MH W/18" DROP CONNECTION
CUT & PLUG EX 18" SS (E)
RIM=78.73
FL 18"=58.60 (IN-W)
PROP FL 24"=54.50 (OUT-S)
N=13829471.22
E=3047865.93
PROP 128 LF 24" SAN SWR
@0.11% SLOPE (TRENCHLESS)
SHADOWBRIAR DR
SURVEY
BASELINE
APPROXIMATE LIMITS OF
CONCRETE PAVEMENT REPAIR
REPLACE CURB & GUTTER
EXST 10" SAN SWR
TO BE ABANDONED
PER COH SPEC 02222
BL STA 17+27 (12.65' RT)
EX SAN SEW MH
"TO BE ABANDONED"
RIM=78.21
FL 24"=58.17 (OUT-E)
FL 18"=58.53 (IN-W)
FL 12"=58.61 (IN-S)
PLUG & ABANDON EX 24",
18" & 12" SAN SWR
N=13829471.78
E=3047873.07
CITY OF HOUSTON
UNRESTRICTED RESERVE "C"
CALLED 1.4227 AC
CITY OF HOUSTON
RESERVE "B"
(HCCF T454749 12/23/1998)
ALIEF ELEMENTARY SCHOOL
NO. 19
EX SAN SWR LIFT STATION
TO BE ABANDONED
(SEE SHT. 222 & 223)
3225 SHADOWBRIAR DR.
R.O.W.
CPE UG Electrical Cable
CenterPoint Energy 4" IP PLA Gas Main
AT&T Buried Cable
Concrete Sidewalk
Brick Wall
Ezee Fiber Buried Cable
12" Water Line
10" Gas Force Main
(Location Per Record)
12' Force Main Easement
Ex 10" SSFM
Ex 18" SS
12" San Swr
18" San Swr
Ex 16" Utility Easement
(FC# 354130 HCMR)
Ex 30" Storm Sewer
Ex 24" Storm Sewer
Ex 12" Storm Sewer
Ex 18" Storm Sewer
Ex 36" Storm Sewer
Ex 42" Storm Sewer
Ex 48" Storm Sewer
Ex 54" Storm Sewer
Ex 60" Storm Sewer
Ex 72" Storm Sewer
Ex 84" Storm Sewer
Ex 96" Storm Sewer
Ex 108" Storm Sewer
Ex 120" Storm Sewer
Ex 132" Storm Sewer
Ex 144" Storm Sewer
Ex 156" Storm Sewer
Ex 168" Storm Sewer
Ex

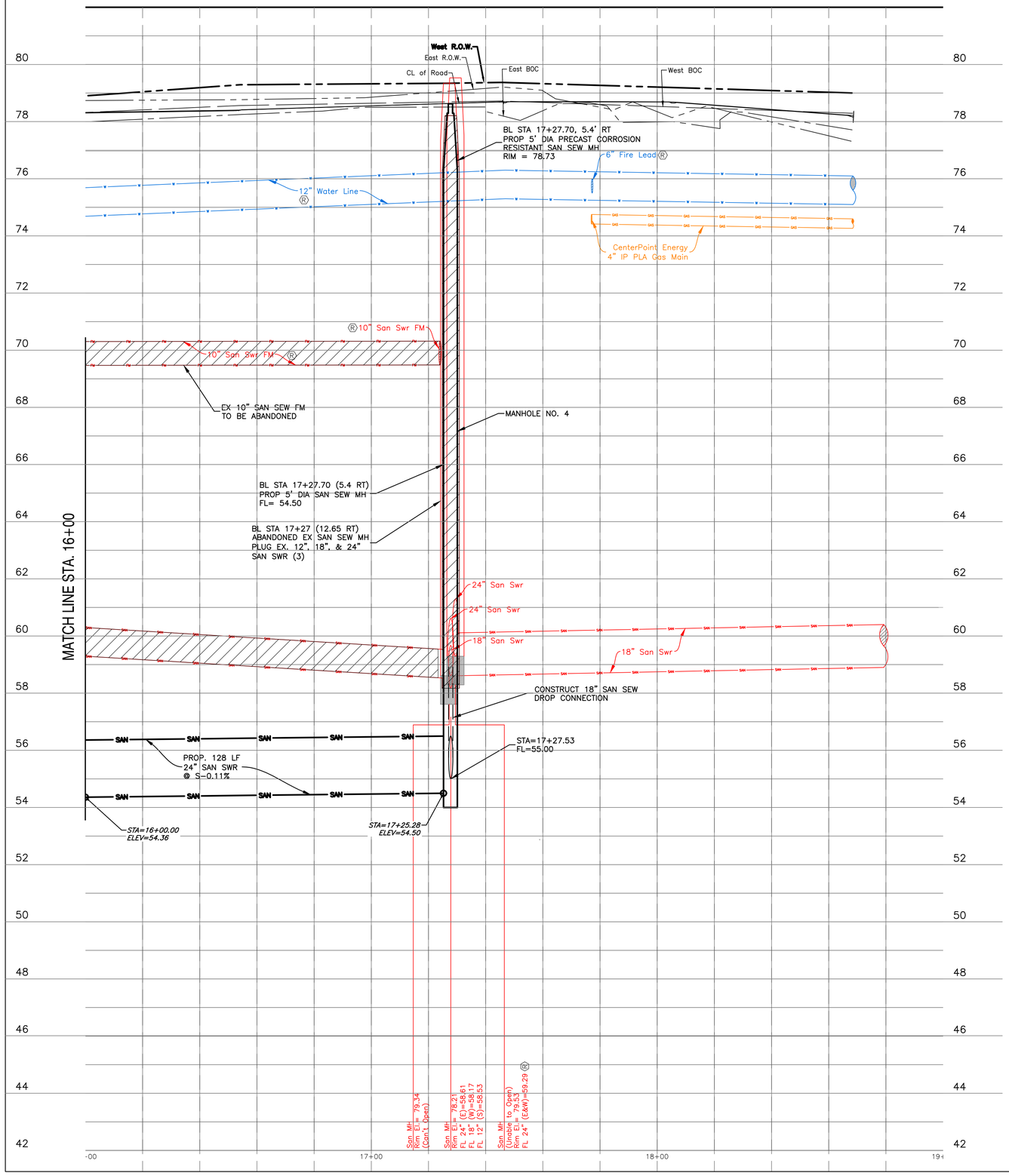

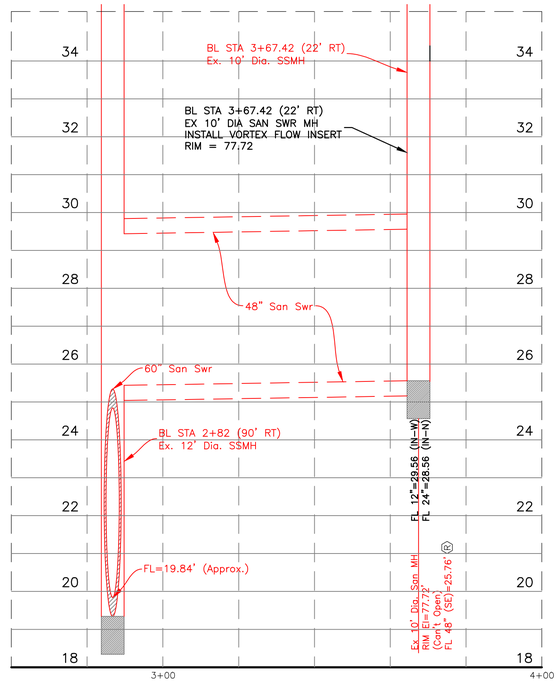

INSET: STA 2+80 TO STA 4+00

SCALE 1"=20'

SEE SHEET C-46-PR

FLOODPLAIN MANAGEMENT OFFICE

APPROVED

ILMS # 26023603

Development Permit #: 26-1091

Date: 03/20/2026 **By:** Joan A Digby

0' 10' 20' 40'

SCALE: 1"=20'

BENCHMARK:

STATIC GPS OBSERVATION OF CITY OF HOUSTON MONUMENT 4855-7914 MADE ON 08/01/2024. A BRASS DISK LOCATED ON SOUTHSIDE OF WESTPARK APPROXIMATELY 0.24 MILES WEST OF W. HOUSTON CENTER BLVD.
ELEVATION: 70.96' (NAVD 88 GEOID 18)

NO	DATE	REVISION	APPROVED

NOTICE:
FOR YOUR SAFETY, YOU ARE REQUIRED BY TEXAS LAW TO CALL 811 AT LEAST 48 HOURS BEFORE YOU DIG SO THAT UNDERGROUND LINES CAN BE MARKED. THIS SIGNATURE DOES NOT FULFILL YOUR OBLIGATION TO CALL 811

VERIFICATION OF PRIVATE UTILITY LINES

Mike Brower 03/25/26
Date

CenterPoint Energy natural gas utilities shown. (Gas service lines are not shown). This signature not be used for conflict verification.

Signature valid for six months.

Mike Brower 03/25/26
Date

CenterPoint Energy/UNDERGROUND Electrical Facilities Verification ONLY.
(This signature verifies existing underground facilities – not to be used for conflict verification)

Signature valid for six months.

Chris Primrose 3/25/26
Date

Approved for AT&T underground conduit facilities only.
Signature valid for one year.

EJES INCORPORATED
Corporate Office: 12801 North Central Expressway, Suite 700, Dallas, Texas 75243, (P) 214-343-1210, (F) 214-343-3885
Houston Office: 6161 Savoy Drive, Suite 830, Houston, Tx. 77036, (P) 281-272-1612, (F) 281-272-1619
EJES, Inc. Copyright © 2017
FIRM REGISTRATION No. 2488

SURVEYED BY: AMANI ENGR.
FB NO. P-6335

STATE OF TEXAS
TANITA GILBERT ALEXANDER
88719
LICENSED
PROFESSIONAL ENGINEER
3-20-26
Tanita Gilbert Alexander

CITY OF HOUSTON
HOUSTON PUBLIC WORKS

LIFT STATION REHABILITATION & RECONSTRUCTION CONSENT DECREE

SHADOW LAKES LIFT STATION
SHADOWBRIAR DRIVE PROFILE
STA 16+00 TO 17+27.70

C-54

WBS NUMBER	FOR CITY OF HOUSTON USE ONLY
R-000267-0175-4	
DRAWING SCALE	
1"=20'	
CITY OF HOUSTON PM	
NP NAWARAJ PANTA, P.E.	
SHEET NO. 245 OF 312	

STANDARD DETAIL DRAWINGS

INDEX OF DRAWINGS

SHEET NO.	DRAWING NO.	DESCRIPTION
246	D-1	INDEX OF STANDARD DETAILS
247	D-2	CONSTRUCTION SIGN BUILD HOUSTON FORWARD
248	D-3	SITE - STANDARD DETAILS - I
249	D-4	SITE - STANDARD DETAILS - II
250	D-5	SITE - STANDARD DETAILS - III
251	D-6	SITE - STANDARD DETAILS - IV
252	D-7	SANITARY SEWER - STANDARD DETAILS - I
253	D-8	SANITARY SEWER - STANDARD DETAILS - II
254	D-9	SANITARY SEWER - STANDARD DETAILS - III
255	D-10	SANITARY SEWER - STANDARD DETAILS - IV
256	D-11	STORM SEWER - STANDARD DETAILS - I
257	D-12	STORM SEWER - STANDARD DETAILS - II
258	D-13	STORM SEWER - STANDARD DETAILS - III
259	D-14	CONCRETE PAVEMENT DETAILS
260	D-15	STREET AND SIDEWALK - STANDARD DETAILS - I
261	D-16	STREET AND SIDEWALK - STANDARD DETAILS - II
262	D-17	STREET AND SIDEWALK - STANDARD DETAILS - III
263	D-18	STREET AND SIDEWALK - STANDARD DETAILS - IV
264	D-19	MECHANICAL - STANDARD DETAILS - I
265	D-20	MECHANICAL - STANDARD DETAILS - II
266	D-21	MECHANICAL - STANDARD DETAILS - III
267	D-22	MECHANICAL - STANDARD DETAILS - IV
268	D-23	STRUCTURAL DETAILS
269	D-24	STANDARD CATWALK DETAILS - I
270	D-25	STANDARD CATWALK DETAILS - II
271	D-26	PRECAST CONCRETE CONTROL BUILDING & HVAC PLANS
272	D-27	PRECAST CONCRETE CONTROL BUILDING FOUNDATION
273	D-28	EMNORA # 2 PRECAST CONCRETE CONTROL BUILDING FOUNDATION
274	D-29	CATWALK PLATFORM CABINET STAIRCASE DETAILS
275	D-30	CONCRETE STAIR DETAILS
276	D-31	ELECTRICAL - LIGHTING FIXTURE SCHEDULE
277	D-32	ELECTRICAL - TYPICAL DETAILS - I
278	D-33	ELECTRICAL - TYPICAL DETAILS - II
279	D-34	ELECTRICAL - RADAR LEVEL TRANSMITTER GAUGING SYSTEM INSTALLATION & DETAILS - I
280	D-35	ELECTRICAL - RADAR LEVEL TRANSMITTER GAUGING SYSTEM INSTALLATION & DETAILS - II
281	D-36	CONCRETE LINED POND STANDARD DETAIL
282	D-37	CHERRY OAK ELECTRICAL GENERATOR FOUNDATION DETAILS - I
283	D-38	VORTEX MANHOLE DETAIL - SHADOWBRIAR DR
284	D-39	ODOR CONTROL SYSTEM - ANNUNCIATION

NO.	DATE	REVISION	APP.

ARCADIS
Infrastructure · Water · Environment · Buildings
1330 Post Oak Blvd, Suite 2250
Houston, TX 77056
Tel: 713-953-4800
Fax: 713-977-4620
www.arcadis.com
Texas Registered Engineering Firm F-533

SURVEYED BY: AMANI ENGR.
FB NO. P-6335

STATE OF TEXAS
DAVID F. RIDGWAY
105134
LICENSED
PROFESSIONAL ENGINEER
02/23/2026

CITY OF HOUSTON
HOUSTON PUBLIC WORKS

LIFT STATION REHABILITATION & RECONSTRUCTION
CONSENT DECREE

INDEX OF STANDARD DETAILS
D-1

WBS NUMBER	FOR CITY OF HOUSTON USE ONLY
R-000267-0175-4	
DRAWING SCALE	
AS NOTED	
CITY OF HOUSTON PM	
NP NAWARAJ PANTA, P.E.	
SHEET NO. 246 OF 312	

FILE PATH: C:\Users\omessan\DC\ACCDocs\Arcadis ACC US\AUS-30126616-Lift Station Rehab And Reconstruct CMAR\Project Files\10_WIP\10T Main PJ Folder\10T_Details\D-1 _INDEX OF DETAILS.dwg
PLOT STYLE: COH.ctb PLOTTED: 2/26/2026 2:29 PM

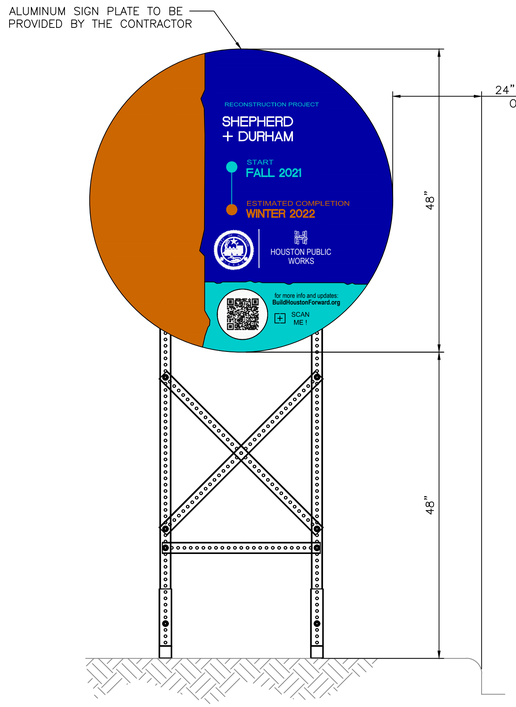

FRONT VIEW

PROJECT SIGN – 48"

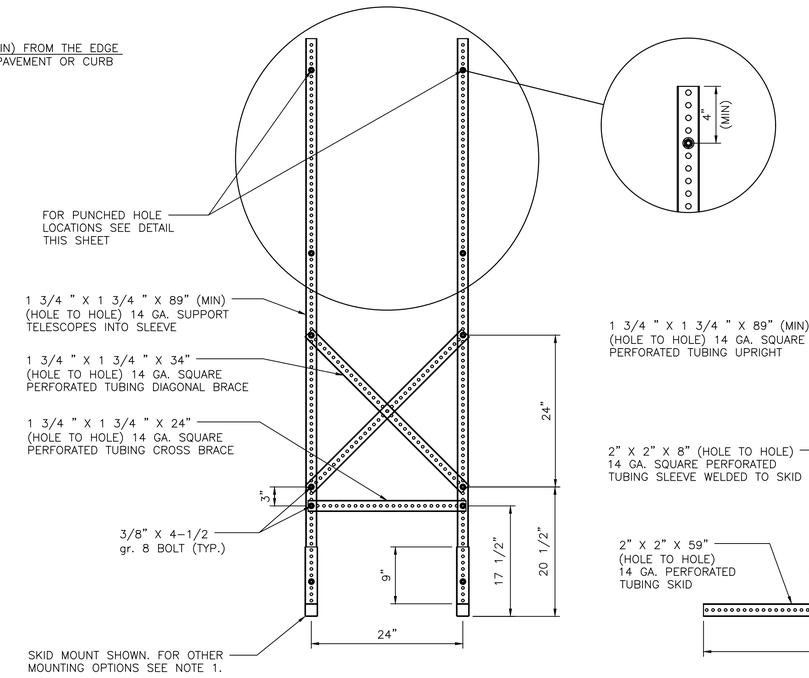

FRONT VIEW

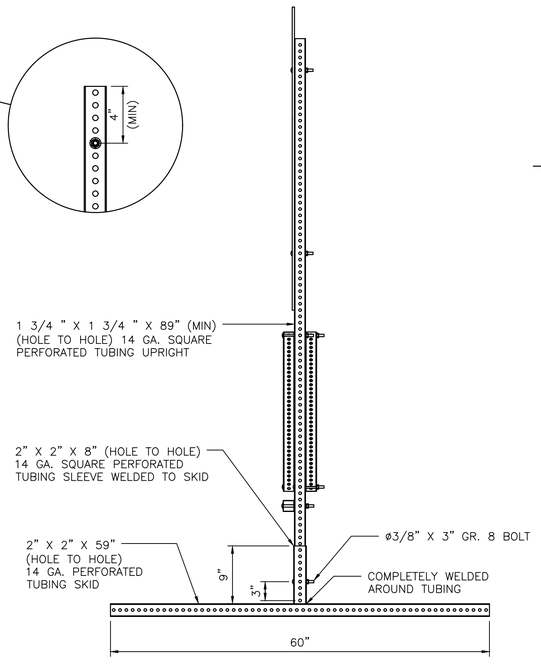

SIDE VIEW

SKID MOUNTED SUPPORTS FOR 48" PROJECT SIGN

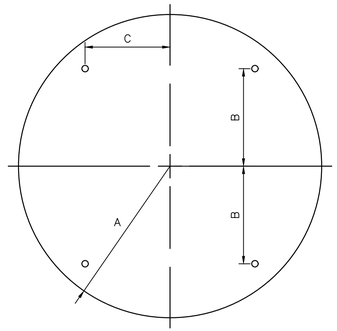

CIRCLE

A	B	C	T
24"	15"	12"	0.080"

48" SIGN PLATE HOLE DETAIL

NOTES:

1. ALLOWABLE POST INSTALLATION METHODS ARE: CONCRETE FOOTING, SURFACE MOUNTING, SKID MOUNTING AND PILE DRIVEN POSTS.
2. FOR POST INSTALLATION WITH CONCRETE FOOTING, REFER TO DETAIL 01554–01.
3. FOR SURFACE MOUNTED POST INSTALLATION, REFER TO DETAIL 01554–02.
4. FOR SKID MOUNTING REQUIREMENTS REFER TO SPECIFICATION 01582.
5. PILE DRIVEN POSTS MUST BE DRIVEN TO A MINIMUM DEPTH OF 4–FEET INTO EXISTING GROUND.
6. LAYOUT, TEXT SIZE, AND OVERALL DESIGN OF THE SIGN WILL BE THE RESPONSIBILITY OF THE BUILD HOUSTON COORDINATOR.
7. ALL SIGN POSTS, SIGN TUBING, AND SIGN FASTENERS SHALL BE GALVANIZED STEEL PER SPECIFICATION 01582.
8. CONTRACTOR TO COORDINATE LOCATION OF CONSTRUCTION SIGN WITH COH PROJECT MANAGER.

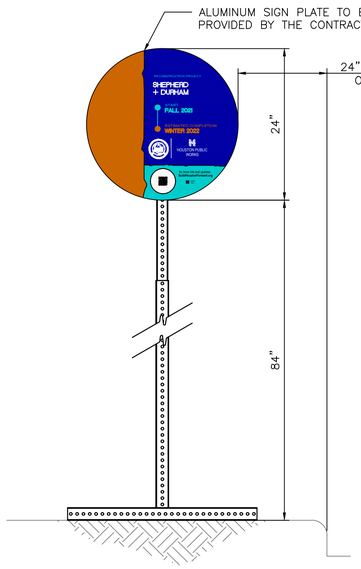

FRONT VIEW

PROJECT SIGN – 24"

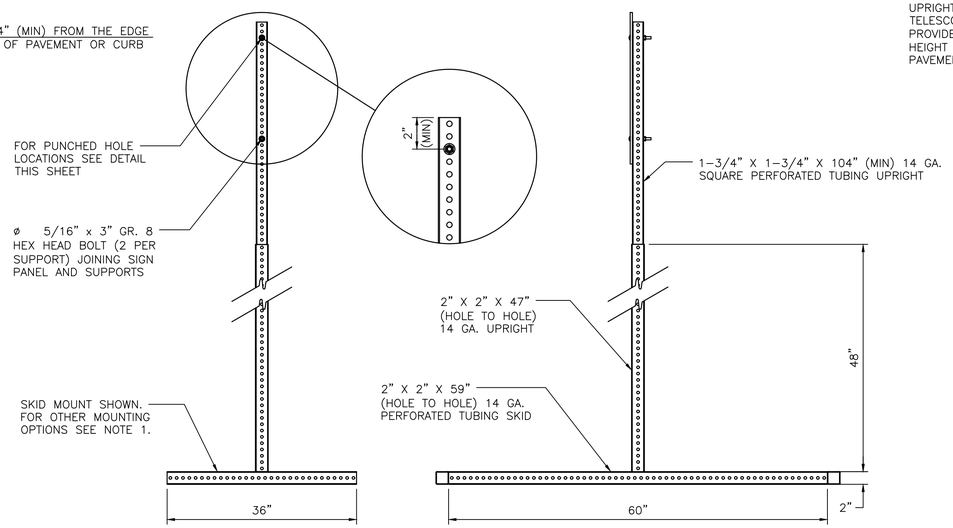

FRONT VIEW

SIDE VIEW

SKID MOUNTED SUPPORTS FOR 24" PROJECT SIGN

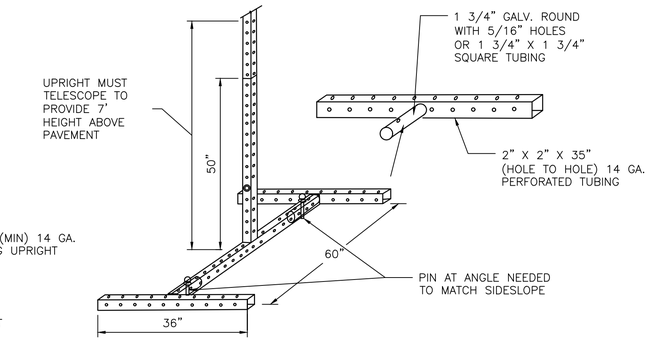

ISO VIEW

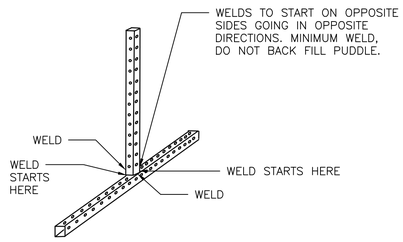

ISO VIEW

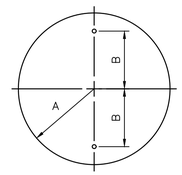

A	B	C
12"	8"	0.080"

24" SIGN PLATE HOLE DETAIL

ARCADIS
Infrastructure · Water · Environment · Buildings
1330 Post Oak Blvd, Suite 2250
Houston, TX 77056
Tel: 713-953-4800
Fax: 713-977-4620
www.arcadis.com
Texas Registered Engineering Firm F-533
SURVEYED BY: AMANI ENGR.
FB NO. P-6335

STATE OF TEXAS
DAVID F. RIDGWAY
105134
LICENSED
PROFESSIONAL ENGINEER
11/20/2025

CITY OF HOUSTON
HOUSTON PUBLIC WORKS

LIFT STATION REHABILITATION & RECONSTRUCTION CONSENT DECREE

CONSTRUCTION SIGN BUILD HOUSTON FORWARD
D–2

WBS NUMBER	FOR CITY OF HOUSTON USE ONLY
R-000267-0175-4	
DRAWING SCALE	
AS NOTED	
CITY OF HOUSTON PM	
NP NAWARAJ PANTA, P.E.	
SHEET NO. 247 OF 312	

FILE PATH: C:\Users\omessan\DC\ACCDocs\Arcadis ACC US\AUS-30126616-Lift Station Rehab And Reconstruct CMAR\Project Files\10_WIP\10T Main PJ Folder\10T_Details\D-2_CONSTRUCTION SIGN.dwg
PLOT STYLE: COH.ctb PLOTTED: 11/20/2025 7:46 AM

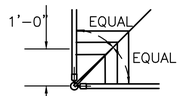

TYPICAL 45° EXTENSION ARM
AT CORNER POST ONLY

PLAN

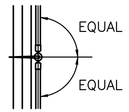

TYPICAL 45° EXTENSION ARM
AT LINE AND PULL POSTS

PLAN

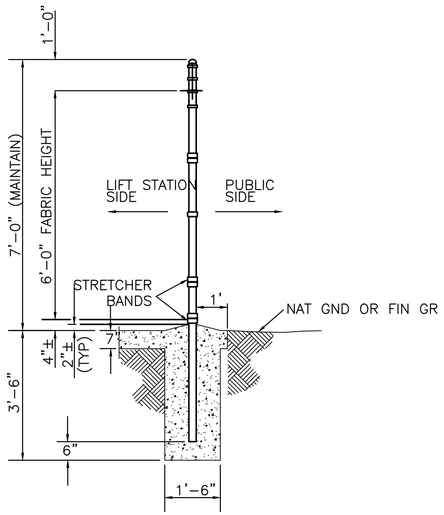

DETAIL
TYPICAL CORNER POST
2
–

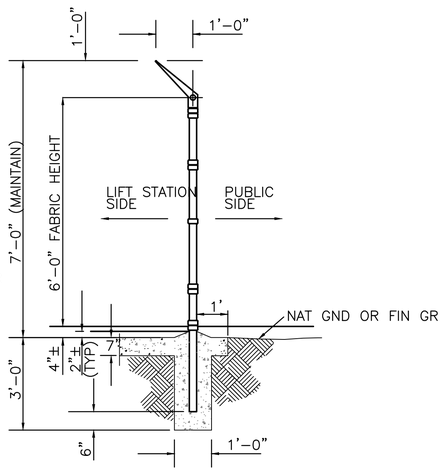

DETAIL
TYPICAL LINE POST
3
–

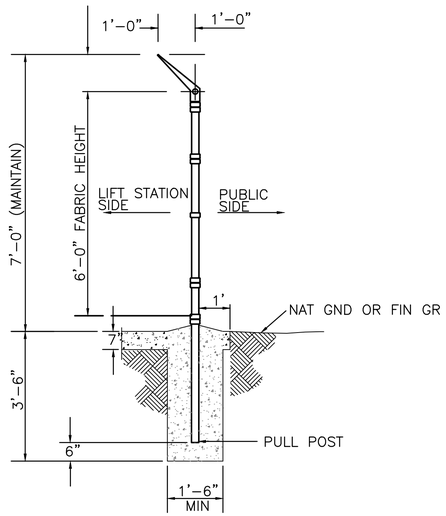

DETAIL
TYPICAL PULL POST
4
–

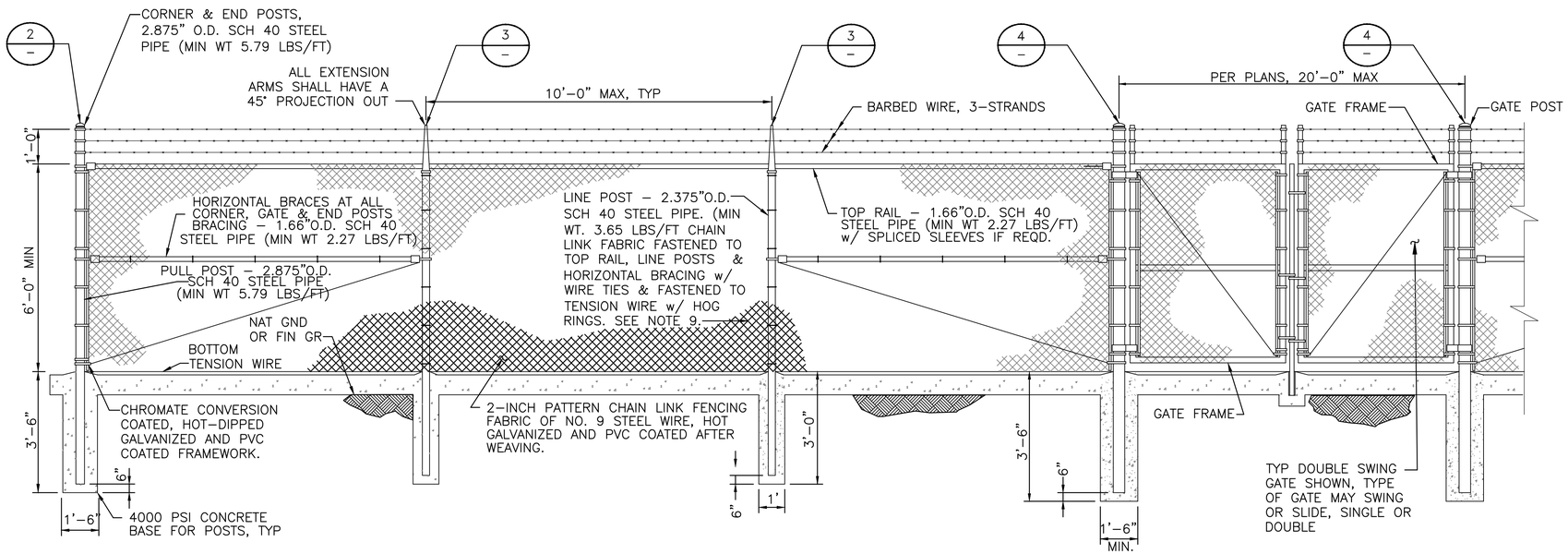

GENERAL SITE FENCING
(SEE NOTES 1 & 2)

NOTES:

1. FENCE FABRIC TO BE 2–INCH MESH WOVEN FROM No.9 WIRE WITH TOP AND BOTTOM SELVAGE TO HAVE TWISTED AND BARBED FINISH, WITH GREEN PVC COATING AND GREEN PVC SLATS.
2. ALL POSTS, TOP RAILS AND BRACING TO BE GALVANIZED BY THE HOT DIP PROCESS. ALL STEEL PIPE SHALL CONFORM TO ASTM 120–77.
3. POSTS TO BE PLACED 10 FEET O. C. MAX.
4. BOTTOM TENSION WIRE TO BE 9 GA. GALVANIZED.
5. FENCE POSTS TO BE SET IN CLASS "A" CONCRETE.
6. STRETCHES OF FENCE MORE THAN 250 FEET IN LENGTH SHALL HAVE ONE INTERMEDIATE PULL POSTS WITH BRACES IN TWO DIRECTIONS.
7. BRACES SHALL BE SPACED MIDWAY BETWEEN TOP RAIL AND GROUND, AND SHALL EXTEND FROM TERMINAL POST TO FIRST ADJACENT LINE POST. BRACES SHALL BE SECURELY FASTENED TO POSTS BY SUITABLE PRESSED STEEL CONNECTIONS THEN TRUSSED FROM LINE POST BACK TO THE TERMINAL POST WITH THREE–EIGHTS (3/8) INCH ROUND ROD.
8. EXTENSION ARMS ARE TO BE HOT DIP GALVANIZED. LINE POSTS ARMS ARE TO BE OF PRESSED RIVETED TO HEAVY MALLABLE OR CAST IRON BASE; END AND CORNER POST ARMS OF MALLABLE IRON. THREE (3) LINES OF GALVANIZED WIRE OF FOUR (4) POINT PATTERN TO BE FIXED TO THE EXTENSION ARMS. TOP MOST BARBED WIRE SHALL BE APPROXIMATELY TWELVE (12) INCHES ABOVE TOP OF THE FENCE. ALL BARBED WIRE SHALL BE SECURELY FASTENED IN SLOTS BY HEAVY WIRE PINS.
9. FABRIC SHALL BE FASTENED TO LINE POSTS WITH FABRIC BANDS SPACED APPROXIMATELY FOURTEEN (14) INCHES APART, AND TO TOP RAIL WITH TIE WIRES APPROXIMATELY TWENTY–FOUR (24) INCHES APART. FENCE IS TO FOLLOW GROUND LINE. WHERE FENCE IS ERECTED ON CONCRETE, BOTTOM OF MESH IS TO BE SLIGHTLY ABOVE CONCRETE TO PERMIT CLEANING.
10. DIAGONAL AND HORIZONTAL BRACING SHALL BE LOCATED AT CORNER PANELS, AND PULL POSTS

ARCADIS
Infrastructure · Water · Environment · Buildings
1330 Post Oak Blvd, Suite 2250
Houston, TX 77056
Tel: 713–953–4800
Fax: 713–977–4620
www.arcadis.com
Texas Registered Engineering Firm F–533

SURVEYED BY: AMANI ENGR.
FB NO. P–6335

STATE OF TEXAS
DAVID F. RIDGWAY
105134
LICENSED
PROFESSIONAL ENGINEER
11/20/2025

CITY OF HOUSTON

HOUSTON PUBLIC WORKS

LIFT STATION REHABILITATION & RECONSTRUCTION
CONSENT DECREE

SITE
STANDARD DETAILS – I
D–3

WBS NUMBER	FOR CITY OF HOUSTON USE ONLY
R–000267–0175–4	
DRAWING SCALE	
AS NOTED	
CITY OF HOUSTON PM	
NP NAWARAJ PANTA, P.E.	
SHEET NO. 248 OF 312	

FILE PATH: C:\Users\omessan\DC\ACCDocs\Arcadis ACC US\AUS-30126616-Lift Station Rehab And Reconstruct CMAR\Project Files\10_WIP\10T Main PJ Folder\10T_Details\D-3_SITE DTLS-I.dwg
PLOT STYLE: COH.ctb PLOTTED: 11/20/2025 7:46 AM

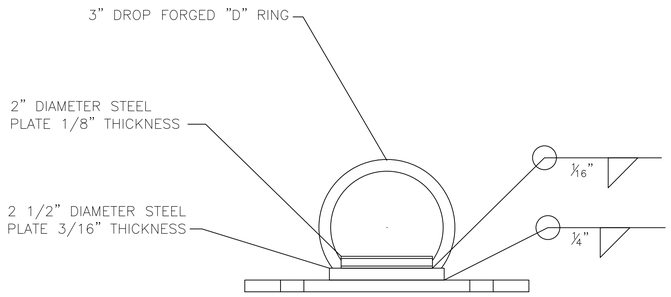

SIDE VIEW

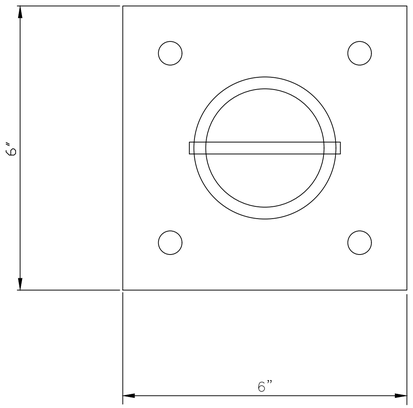

PLAN VIEW

CB SERIES FALL PROTECTION CB-1B BOLT ANCHORED

DETAIL 1 / NTS

NOTES:

1. STEEL BASE PLATE SHALL BE ¼" HOT ROLLED STEEL PLATE THAT MEETS ASTM A-570 SPECIFICATIONS.
2. 2 ½" DIAMETER STEEL PLATE, 3/16" THICK ATTACHED TO BASE PLATE USING ¼" FILLET WELD.
3. 2" DIAMETER FORMED STEEL PLATE, ⅛" THICK USED TO ATTACHED "D" RING TO THE 2 ½" DIAMETER STEEL PLATE USING A 1/16" FILLET WELD.
4. BASE PLATE CAN BE BOLTED TO CONCRETE, STEEL, OR WOOD AS NEEDED PER APPLICATION.
5. ANCHOR BOLTS SHALL BE ½" DIAMETER ANCHOR BOLTS.
6. ANCHOR BOLTS SHALL SUSTAIN A MINIMUM ULTIMATE PULL-OUT LOAD OF AT LEAST 6,000 POUNDS.
7. WELDING SHALL BE PERFORMED BY A CERIFIFIED WELDER USING E-70XX ROD OR WIRE FEED.

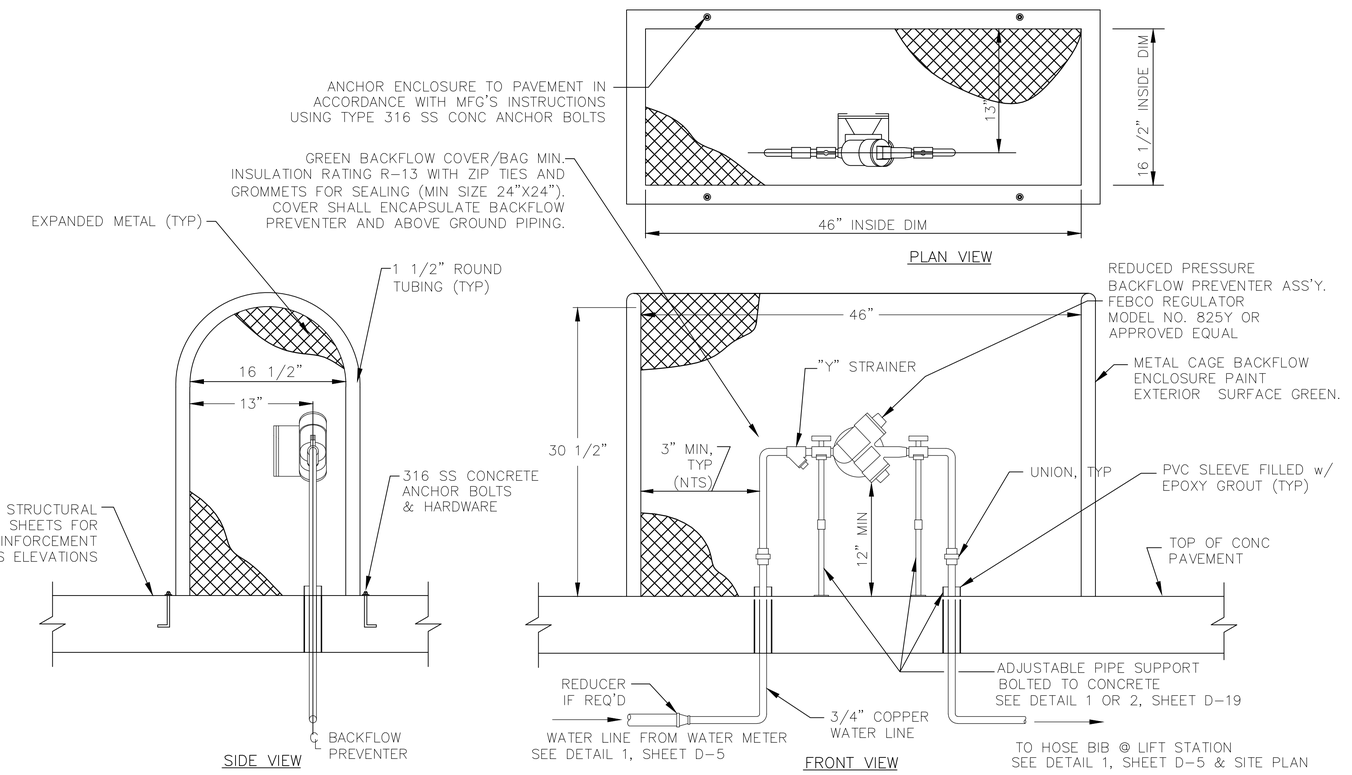

OPEN CAGE REDUCED PRESSURE BACKFLOW PREVENTER INSTALLATION

DETAIL 2 / NTS

NO.	DATE	REVISION	APP.

NOTICE:
FOR YOUR SAFETY, YOU ARE REQUIRED BY TEXAS LAW TO CALL 811 AT LEAST 48 HOURS BEFORE YOU DIG SO THAT UNDERGROUND LINES CAN BE MARKED. THIS SIGNATURE DOES NOT FULFILL YOUR OBLIGATION TO CALL 811

VERIFICATION OF PRIVATE UTILITY LINES

N/A

Date

CenterPoint Energy natural gas utilities shown. (Gas service lines are not shown). This signature not be used for conflict verification.

Signature valid for six months.

N/A

Date

CenterPoint Energy/UNDERGROUND Electrical Facilities Verification ONLY. (This signature verifies existing underground facilities – not to be used for conflict verification)

Signature valid for six months.

Date

Approved for AT&T underground conduit facilities only.
Signature valid for one year.

ARCADIS
Infrastructure · Water · Environment · Buildings
1330 Post Oak Blvd, Suite 2250
Houston, TX 77056
Tel: 713-953-4800
Fax: 713-977-4620
www.arcadis.com
Texas Registered Engineering Firm F-533

SURVEYED BY: AMANI ENGR.
FB NO. P-6335

STATE OF TEXAS · DAVID F. RIDGWAY · 105134 · LICENSED PROFESSIONAL ENGINEER · 11/20/2015

CITY OF HOUSTON
HOUSTON PUBLIC WORKS

LIFT STATION REHABILITATION & RECONSTRUCTION CONSENT DECREE

SITE
STANDARD DETAILS – II
D-4

WBS NUMBER	FOR CITY OF HOUSTON USE ONLY
R-000267-0175-4	
DRAWING SCALE	
AS NOTED	
CITY OF HOUSTON PM	
NP NAWARAJ PANTA, P.E.	
SHEET NO. 249 OF 312	

FILE PATH: C:\Users\omesson\DC\ACCDocs\Arcadis ACC US\AUS-30126616-Lift Station Rehab And Reconstruct CMAR\Project Files\10_WIP\10T Main PJ Folder\10T_Details\D-4_SITE DTLS-II.dwg
PLOT STYLE: COH.ctb PLOTTED: 11/20/2025 7:46 AM

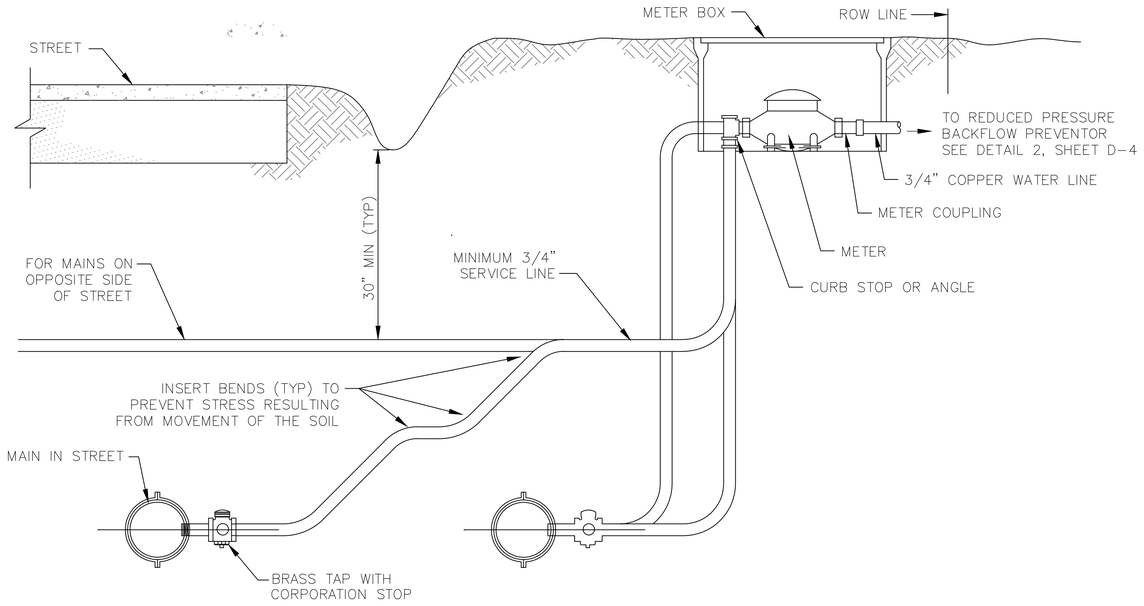

TYP WATER SERVICE LINE SECTION & METER SET DETAIL

DETAIL 1/–

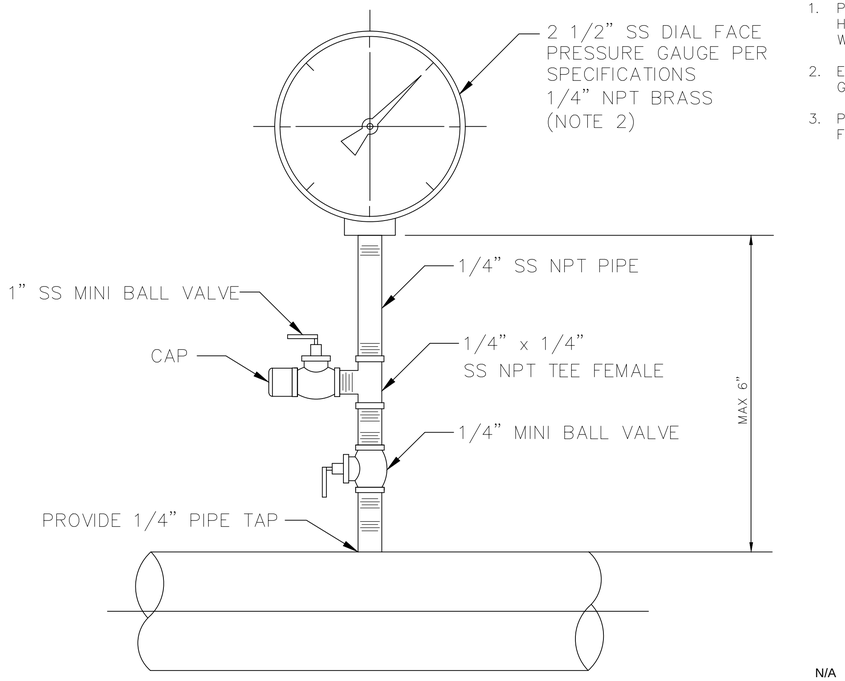

NOTES:

1. PROVIDE WARNING SIGN WHEN HOSE BIBB IS USED FOR POTABLE WATER.
2. ENGINEER TO SELECT PRESSURE GAUGE TO FIT APPLICATION.
3. PLUMBER TO PROVIDE CERTIFICATE FOR BACKFLOW PREVENTER.

N/A

1. ALL FITTINGS SHALL BE STAINLESS STEEL (316).
2. PRESSURE GAUGE SHOULD BE APPROPRIATE TO SYSTEM PRESSURE

N/A

PRESSURE GAUGE DETAIL

DETAIL 2/–

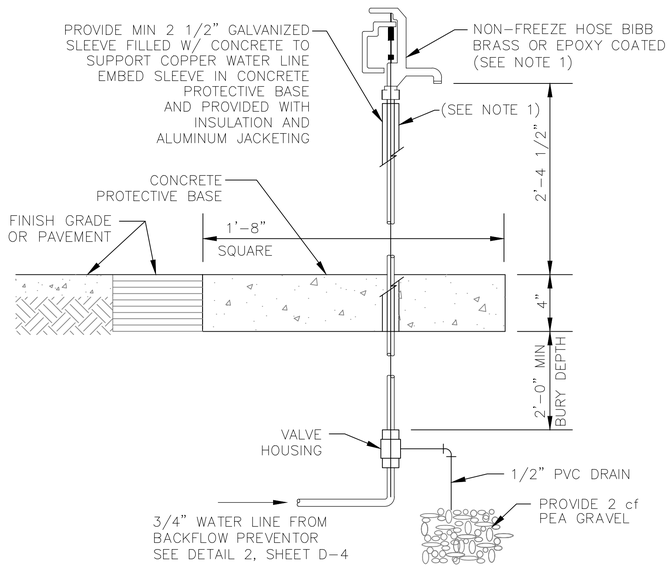

TYP NON-FREEZE HOSE BIBB DETAIL

DETAIL 3/–

NO.	DATE	REVISION	APP.

ARCADIS
Infrastructure · Water · Environment · Buildings
1330 Post Oak Blvd, Suite 2250
Houston, TX 77056
Tel: 713-953-4800
Fax: 713-977-4620
www.arcadis.com
Texas Registered Engineering Firm F-533

SURVEYED BY: AMANI ENGR.
FB NO. P-6335

STATE OF TEXAS
DAVID F. RIDGWAY
105134
LICENSED
PROFESSIONAL ENGINEER
11/20/2025

CITY OF HOUSTON

HOUSTON PUBLIC WORKS

LIFT STATION REHABILITATION & RECONSTRUCTION CONSENT DECREE

SITE STANDARD DETAILS – III D-5

WBS NUMBER	FOR CITY OF HOUSTON USE ONLY
R-000267-0175-4	
DRAWING SCALE	
AS NOTED	
CITY OF HOUSTON PM	
NP NAWARAJ PANTA, P.E.	
SHEET NO. 250 OF 312	

FILE PATH: C:\Users\omessan\DC\ACCDocs\Arcadis ACC US\AUS-30126616-Lift Station Rehab And Reconstruct CMAR\Project Files\10_WIP\10T Main PJ Folder\10T_Details\D-5_SITE DTLS-III.dwg
PLOT STYLE: COH.ctb PLOTTED: 11/20/2025 7:46 AM

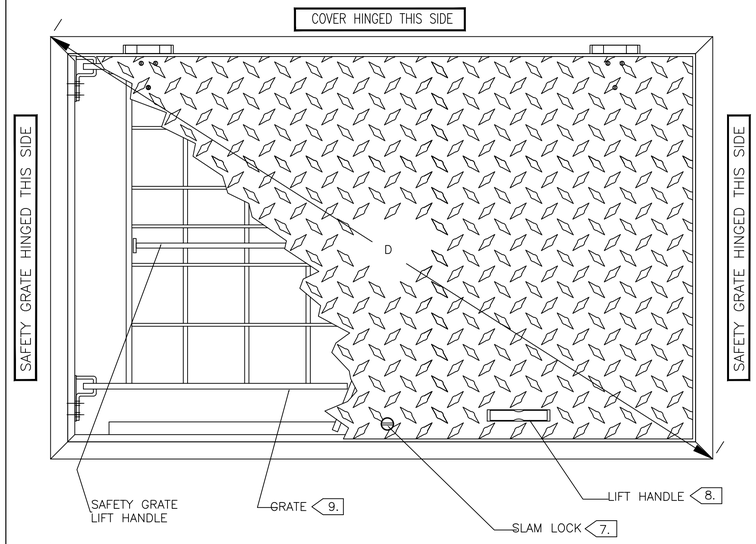

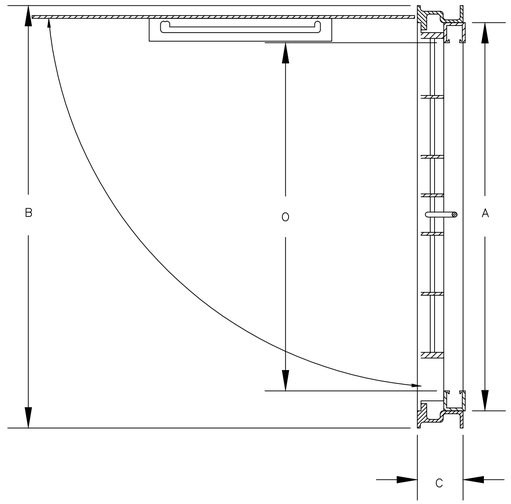

NOTE:
MANHOLE HATCH INSTALLED IN PAVEMENT AREA SHALL BE TRAFFIC–RATED H20 TO HANDLE VEHICLES LOADS

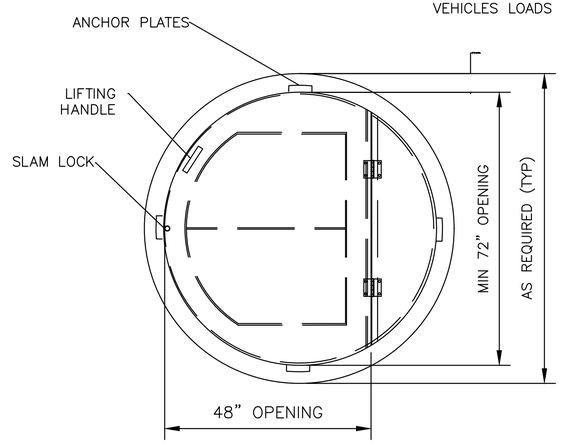

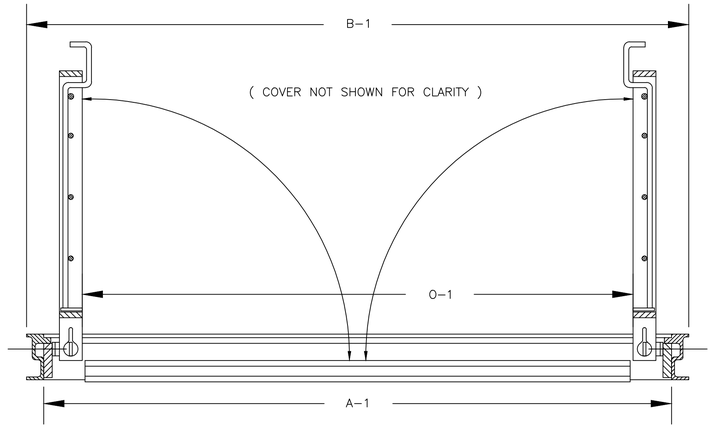

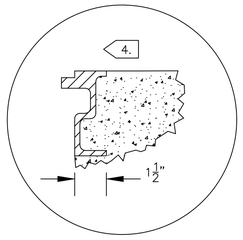

DETAIL B

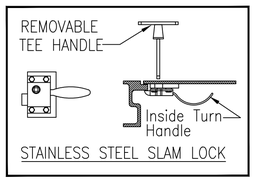

DETAIL A

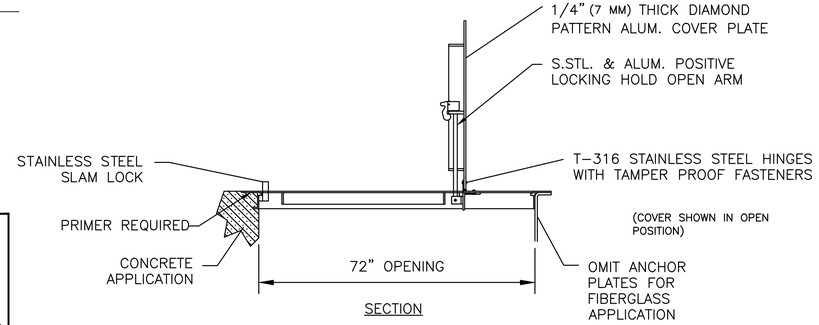

SECTION

PATTERN NO.	DIMENSIONS IN INCHES		UNOBSTRUCTED CLEAR OPENING	HEIGHT	DIAGONAL
ALUMINUM	A x A1	B x B1	O x O1	C	D
FLED–AOSH	PER MANUFACTURER	PER MANUFACTURER	MATCH EXISTING	PER MANUFACTURER	PER MANUFACTURER

1.) MATERIAL SHALL BE 6061–T6 ALUMINUM FOR BARS, ANGLES, AND EXTRUSIONS. 1/4" DIAMOND PLATE SHALL BE 5086 ALUMINUM. EXTERIOR OF FRAME WHICH COMES IN CONTACT WITH CONCRETE SHALL HAVE ONE COAT FOREST GREEN PAINT.

2.) UNIT DESIGNED PEDESTRIAN RATED FOR A MINIMUM LIVE LOAD OF 300 LBS./SQ.FT.

3.) DOOR SHALL BE EQUIPPED WITH A HOLD OPEN ARM. DOOR SHALL LOCK OPEN IN THE 90 DEGREE POSITION. HOLD OPEN ARM SHALL BE FASTENED TO THE FRAME WITH A 1/2" GRADE 316 STAINLESS STEEL BOLT.

4. ANGLE FRAME SHALL BE OF EXTRUDED ALUMINUM, WITH A CONTINUOUS 1–1/2" ANCHOR FLANGE.

5.) COVER HINGES SHALL BE OF HEAVY DUTY DESIGN. MATERIAL SHALL BE GRADE 316 STAINLESS STEEL. EACH HINGE SHALL HAVE A GRADE 316 STAINLESS STEEL, 3/8" DIAMETER HINGE PIN. HINGE SHALL BE FASTENED TO ANGLE AND DIAMOND PLATE WITH GRADE 316 STAINLESS STEEL BOLTS AND NY–LOCK NUTS.

6.) ALL HARDWARE SHALL BE 316 STAINLESS STEEL.

7. EACH HATCH SHALL BE SUPPLIED WITH A GRADE 316 STAINLESS STEEL SLAM LOCK, WITH KEY WAY PROTECTED BY A THREADED PLUG. PLUG SHALL BE FLUSH WITH THE TOP OF THE 1/4" DIAMOND PLATE. SLAM LOCK SHALL BE FASTENED WITH FOUR GRADE 316 STAINLESS STEEL BOLTS AND WASHERS.

8. EACH HATCH SHALL BE EQUIPPED WITH AN ALUMINUM LIFT HANDLE. THE LIFT HANDLE SHALL BE FLUSH WITH THE TOP OF THE 1/4" DIAMOND PLATE.

9. UNITS SHALL BE SUPPLIED WITH A HINGED ALUMINUM SAFETY GRATES POWDER COATED (SAFETY YELLOW) TO PROVIDE PROTECTION AGAINST FALL THROUGH AND TO CONTROL ACCESS TO THE CONFINED SPACE. (SEE SAFETY GRATE SPECIFICATIONS ON SEPARATE PAGE.)

10.) HATCH COVERS SHALL BE PAINTED FOREST GREEN TO DEMARCATE AND PREVENT VANDALISM. LABEL HATCHES WITH THE CORRESPONDING PUMP NUMBER USING A 12–INCH BY 12–INCH 316SS PLATE ENGRAVED WITH A 6–INCH LETTERING WELDED TO THE HATCH.

11.) MAXIMUM OPEN SPACING BETWEEN HINGED SAFETY GRATES AND HATCH OPENING SHALL BE NO MORE THAN 3–INCHES

LIFT STATION WET WELL HATCHES

DETAIL 1

SOURCE: ITT/FLYGT

STANDARD FEATURES:

- AUTO–LOCK T–316 STAINLESS STEEL HOLD OPEN ARM WITH RELEASE HANDLE
- T–316 STAINLESS STEEL HINGES AND ATTACHING HARDWARE
- NON–CORROSIVE LOCKING BAR
- SINGLE LEAF CONSTRUCTION FOR MAXIMUM ACCESS
- 300 LBS. PER SQ. FT. LOAD RATING (1464 KG. PER SQ. METER LOAD RATING)
- EXTRUDED ALUMINUM FRAME
- RECESSED LIFTING HANDLE
- ANCHOR PLATES (ORDER WITHOUT FOR FIBERGLASS OR DROP–IN INSTALLATIONS)
- LIFETIME GUARANTEE
- COVERED FRAME PAINTED FOREST GREEN

STANDARD SIZES					
QTY.	MODEL NO.	A DIM. INCHES (MM)	B DIM. INCHES (MM)	C DIM. INCHES (MM)	UNIT WT. LBS. (KG.)
1	R1R72	48 (1219)	72 (1829)	78 (1981)	175 (79)

FORCE MAIN BYPASS MANHOLE HATCH

SOURCE: HALLIDAY PRODUCTS
PHONE: 1 (800) 298–1027

DETAIL 2

NO.	DATE	REVISION	APP.

ARCADIS
Infrastructure · Water · Environment · Buildings
1330 Post Oak Blvd, Suite 2250
Houston, TX 77056
Tel: 713–953–4800
Fax: 713–977–4620
www.arcadis.com
Texas Registered Engineering Firm F–533

SURVEYED BY: AMANI ENGR.
FB NO. P–6335

STATE OF TEXAS
DAVID F. RIDGWAY
105134
LICENSED PROFESSIONAL ENGINEER
03/12/2026

CITY OF HOUSTON
HOUSTON PUBLIC WORKS

LIFT STATION REHABILITATION & RECONSTRUCTION CONSENT DECREE

SITE
STANDARD DETAILS – IV
D–6

WBS NUMBER	FOR CITY OF HOUSTON USE ONLY
R–000267–0175–4	
DRAWING SCALE	
AS NOTED	
CITY OF HOUSTON PM	
NP NAWARAJ PANTA, P.E.	
SHEET NO. 251 OF 312	

FILE PATH: C:\Users\omesson\DC\ACCDocs\Arcadis ACC US\AUS–30126616–Lift Station Rehab And Reconstruct CMAR\Project Files\10_WIP\10T Main PJ Folder\10T_Details\D–6_SITE DTLS–IV.dwg
PLOT STYLE: Coh_ctb_2360FIEB 3/27/2026 2:27 PM

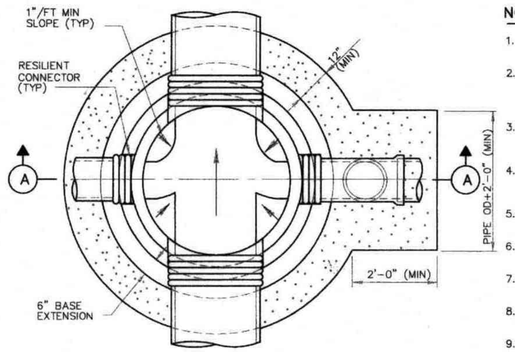

FOUNDATION PLAN

NOTES:

1. DEPTH OF MANHOLE DETERMINES SECTIONS REQUIRED.
2. PRECAST CONCRETE RINGS SHALL BE PROVIDED FOR A COMBINED ADJUSTMENT HEIGHT OF AT LEAST 12". THE TOTAL HEIGHT OF THE ADJUSTMENT RINGS SHALL NOT EXCEED 1'-6".
3. MANHOLE WALL THICKNESS FOR DEPTH EXCEEDING 12'-0" SHALL BE DETERMINED TO MEET LOADING CONDITIONS. MIN THICKNESS 5".
4. MANHOLE DROP AND INTERSECTING PIPES SHALL BE INSTALLED ONLY WHEN CALLED FOR IN PLAN AND PROFILE DRAWING.
5. ALTERNATE ECCENTRIC CONE AND/OR TRANSITION SECTION MAY BE USED.
6. SEAT MANHOLE FRAME IN SEALANT PER COH STANDARD SPECIFICATION.
7. OMIT CEMENT MORTAR WHEN MANHOLE IS LOCATED IN PAVED AREAS.
8. MIN REINFORCING IN THE PRECAST CONCRETE BASE SHALL BE # 5 @ 8 EW.
9. WHERE DIMENSIONAL RESTRICTIONS DICTATE, THE MANHOLE BASE HEIGHT SHALL BE ADJUSTED TO HAVE THE UPPER INLET PIPE OF THE DROP ENTER INTO THE 4'-0" DIAMETER RISER SECTION.
10. CONTRACTOR SHALL FOLLOW TCEQ REQUIREMENTS FOR BENCHING, REFER TO TABLE BELOW.

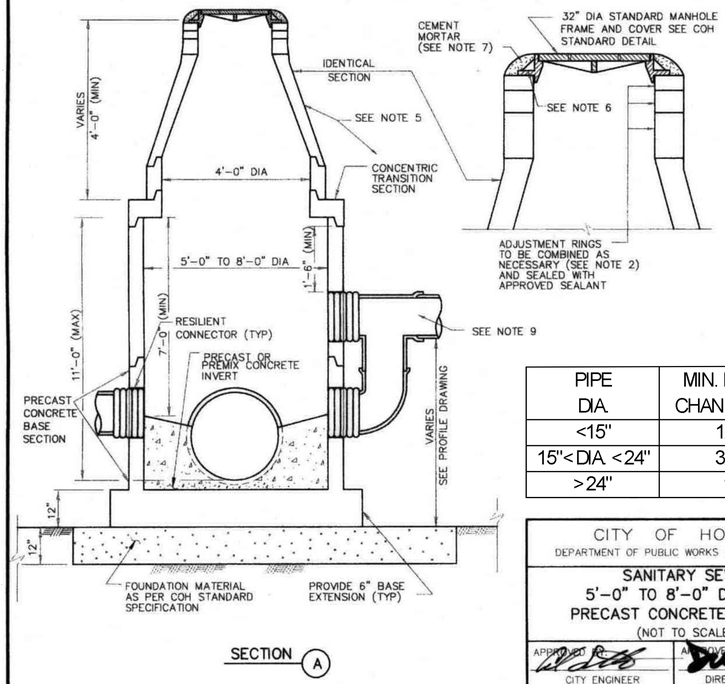

SECTION (A)

PIPE DIA.	MIN. REQUIRED CHANNEL DEPTH
<15"	1/2 DIA.
15"< DIA. <24"	3/4 DIA.
>24"	1 DIA.

CITY OF HOUSTON
DEPARTMENT OF PUBLIC WORKS AND ENGINEERING

SANITARY SEWER
5'-0" TO 8'-0" DIAMETER
PRECAST CONCRETE MANHOLE
(NOT TO SCALE)

APPROVED BY: CITY ENGINEER
APPROVED BY: DIRECTOR OF PUBLIC WORKS AND ENGINEERING
EFF DATE: JULY-01-2010
DWG NO: 02082-03

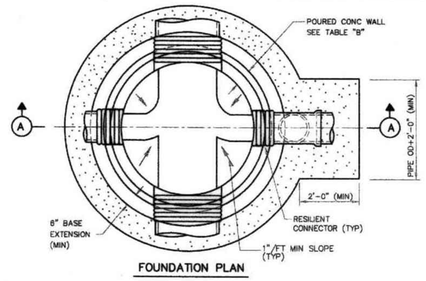

FOUNDATION PLAN

NOTES:

1. SEAT MANHOLE FRAME IN SEALANT PER COH STANDARD SPECIFICATION.
2. OMIT CEMENT MORTAR WHEN MANHOLE IS LOCATED IN PAVED AREAS.
3. MANHOLE DROP AND INTERSECTING PIPES SHALL BE INSTALLED ONLY WHEN CALLED FOR IN PLAN AND PROFILE DRAWING.
4. CONTRACTOR SHALL FOLLOW TCEQ REQUIREMENTS FOR BENCHING, REFER TO TABLE BELOW.

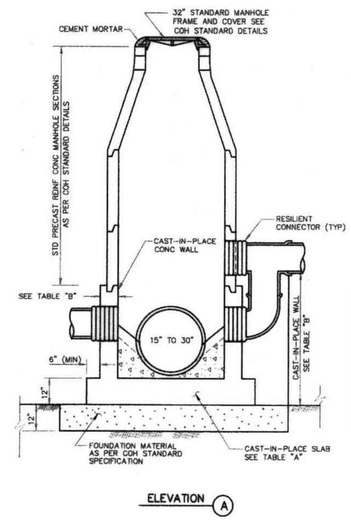

ELEVATION (A)

PIPE DIA.	MIN. REQUIRED CHANNEL DEPTH
<15"	1/2 DIA.
15"< DIA. <24"	3/4 DIA.
>24"	1 DIA.

NOTES ON USE OF STANDARD DETAIL

TABLE "A"

BASE SLAB REINFORCING AND THICKNESS

MH INSIDE DIA (FT)	DEPTH TO INV (FT)	BASE THICKNESS	REINFORCING (E W, T & B)
8	≤ 20	1'-0"	# 6 @ 10"
	≤ 25	1'-2"	# 6 @ 8"
	≤ 30	1'-4"	# 6 @ 7"
	≤ 40	1'-6"	# 6 @ 6"
	≤ 50	1'-8"	# 6 @ 6"
	≤ 60	1'-10"	# 6 @ 6"
6	≤ 15	1'-0"	# 5 @ 8"
	≤ 20	1'-0"	# 5 @ 8"
	≤ 25	1'-2"	# 5 @ 7"
	≤ 30	1'-2"	# 5 @ 6"
	≤ 40	1'-2"	# 6 @ 8"
	≤ 50	1'-4"	# 6 @ 8"
	≤ 60	1'-4"	# 6 @ 7"
5	≤ 15	1'-0"	# 5 @ 8"
	≤ 20	1'-0"	# 5 @ 7"
	≤ 25	1'-0"	# 5 @ 6"
	≤ 30	1'-0"	# 6 @ 10"
	≤ 40	1'-2"	# 6 @ 10"
	≤ 50	1'-2"	# 6 @ 8"
	≤ 60	1'-2"	# 6 @ 8"
4	≤ 20	1'-0"	# 5 @ 8"
	≤ 25	1'-0"	# 5 @ 8"
	≤ 30	1'-0"	# 5 @ 7"
	≤ 40	1'-0"	# 6 @ 10"

TABLE "B"

WALL REINFORCING AND THICKNESS

MH INSIDE DIA (FT)	DEPTH TO PIPE TO INV (FT)	MAXIMUM CAST-IN-PLACE WALL HEIGHT	WALL THICKNESS	REINFORCING AT EACH FACE VERTICAL	REINFORCING AT EACH FACE HORIZONTAL
8	≤ 20	6'-0"	0'-10"	# 6 @ 12"	# 6 @ 12"
	≤ 25	6'-6"	0'-10"	# 6 @ 10"	
	≤ 30	7'-0"	0'-10"	# 6 @ 8"	
	≤ 40	8'-0"	1'-0"	# 6 @ 8"	
	≤ 50	9'-0"	1'-2"	# 6 @ 8"	
	≤ 60	10'-0"	1'-4"	# 6 @ 6"	
6	≤ 15	5'-0"	0'-8"	# 5 @ 12"	# 5 @ 12"
	≤ 20	5'-8"	0'-8"	# 5 @ 8"	
	≤ 25	6'-0"	0'-9"	# 5 @ 8"	
	≤ 30	6'-0"	0'-9"	# 5 @ 6"	# 5 @ 8"
	≤ 40	7'-0"	0'-10"	# 5 @ 8"	
	≤ 50	7'-0"	1'-0"	# 6 @ 8"	
	≤ 60	8'-0"	1'-2"	# 6 @ 7"	
5	≤ 15	5'-0"	0'-8"	# 5 @ 8"	# 4 @ 12"
	≤ 20	5'-4"	0'-8"	# 5 @ 7"	
	≤ 25	5'-8"	0'-10"	# 5 @ 6"	
	≤ 30	6'-0"	0'-10"	# 6 @ 10"	# 5 @ 12"
	≤ 40	6'-4"	0'-10"	# 6 @ 10"	
	≤ 50	6'-8"	1'-0"	# 6 @ 8"	
	≤ 60	7'-0"	1'-0"	# 6 @ 8"	
4	≤ 20	4'-6"	0'-8"	# 5 @ 12"	# 4 @ 12"
	≤ 25	5'-0"	0'-8"	# 5 @ 10"	
	≤ 30	5'-6"	0'-10"	# 6 @ 12"	
	≤ 40	6'-0"	0'-10"	# 6 @ 12"	

NOTE TO SPECIFIER:

1. TABLES "A" AND "B" WILL BE USED TO DESIGN THE CAST-IN-PLACE BASE AND WALL FOR VARIOUS MANHOLE DIAMETER AND DEPTH.

CITY OF HOUSTON
DEPARTMENT OF PUBLIC WORKS AND ENGINEERING

SANITARY SEWER
PRECAST CONCRETE MANHOLE
WITH CAST-IN-PLACE BASE
(NOT TO SCALE)

APPROVED BY: CITY ENGINEER
APPROVED BY: DIRECTOR OF PUBLIC WORKS AND ENGINEERING
EFF DATE: JULY-01-2010
DWG NO: 02082-08

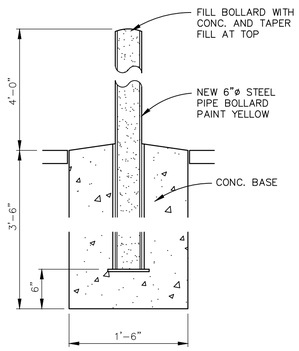

STANDARD BOLLARD DETAIL (1)

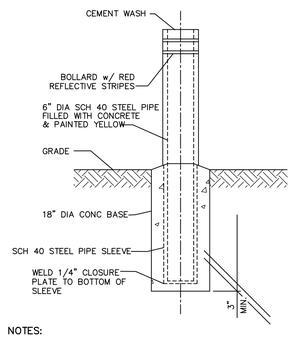

NOTES:

1. ENCASE 8"SCH 40 STEEL PIPE IN THE GROUND AT EACH LOCATION WHERE THE BOLLARD SHALL BE REMOVABLE
2. ENSURE ENCASED PIPE IS FITTED SECURELY TO AVOID FLOPPING OF THE BOLLARD WITHIN THE SLEEVE.

REMOVABLE BOLLARD DETAIL (2)

ARCADIS
Infrastructure · Water · Environment · Buildings
1330 Post Oak Blvd, Suite 2250
Houston, TX 77056
Tel: 713-953-4800
Fax: 713-977-4620
www.arcadis.com
Texas Registered Engineering Firm F-533

SURVEYED BY: AMANI ENGR.
FB NO. P-6335

STATE OF TEXAS
DAVID F. RIDGWAY
105134
LICENSED
PROFESSIONAL ENGINEER
05/12/2016

CITY OF HOUSTON
HOUSTON PUBLIC WORKS

LIFT STATION REHABILITATION & RECONSTRUCTION
CONSENT DECREE

SANITARY SEWER
STANDARD DETAILS – I

D-7

WBS NUMBER	FOR CITY OF HOUSTON USE ONLY
R-000267-0175-4	
DRAWING SCALE	
AS NOTED	
CITY OF HOUSTON PM	
NP NAWARAJ PANTA, P.E.	
SHEET NO. 252 OF 312	

FILE PATH: C:\Users\omesson\DC\ACCDocs\Arcadis ACC US\AUS-30126616-Lift Station Rehab And Reconstruct CMAR\Project Files\10_WIP\10T Main PJ Folder\10T_Details\D-7_SANITARY SEWER-1.dwg
PLOT STYLE: COH.ctb PLOTTED: 3/9/2026 2:49 PM

FILE PATH: C:\Users\omessan\DC\ACCDocs\Arcadis ACC US\AUS-30126616-Lift Station Rehab And Reconstruct CMAR\Project Files\10_WIP\10T Main PJ Folder\10T_Details\D-8_SANITARY SEWER-II.dwg
PLOT STYLE: COH.ctb PLOTTED: 11/20/2025 7:48 AM

NOTES:

1. GROUTING OF MANHOLE STRUCTURE ANNULAR SPACE WILL BE PERMITTED IN CASES WHERE INSUFFICIENT WORK SPACE EXISTS FOR PLACEMENT AND COMPACTION OF CEMENT STABILIZED SAND, PER COH STANDARD SPECIFICATION FOR TUNNEL GROUT.
2. THIS DETAIL ALSO APPLIES TO BACKFILL OF SHAFTS WITHOUT STRUCTURES.
3. ARRANGE PIPE JOINTS AS SHOWN WHEN USING RIGID CONNECTION TO CAST IN PLACE MANHOLE BASE.

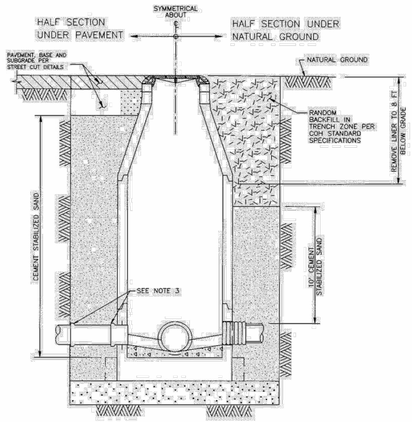

TYPICAL CROSS – SECTION

CITY OF HOUSTON
DEPARTMENT OF PUBLIC WORKS AND ENGINEERING
ENGINEERING, CONSTRUCTION AND REAL ESTATE DIVISION

SANITARY SEWER
BACKFILL OF SHAFTS
(NOT TO SCALE)

APPROVED BY: CITY ENGINEER — APPROVED BY: DIRECTOR OF PUBLIC WORKS AND ENGINEERING
EFF DATE: OCT-01-2002 DWG NO: 02317-08

NOTES:

1. CRUSHED STONE SUPPORT UNDER A MANHOLE BASE SHALL BE INSTALLED AT LOCATIONS WHERE REQUIRED SUBGRADE COMPACTION OR DEWATERING CANNOT BE ACHIEVED.
2. WHERE HEAVING SUBGRADE CONDITIONS OCCUR, AS DETERMINED BY THE CITY ENGINEER, A PILE SUPPORTED MANHOLE SHALL BE PROVIDED.

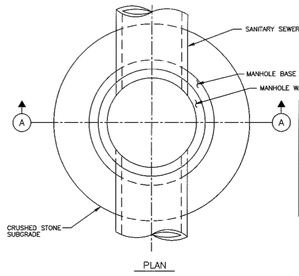

PLAN

NOTE TO SPECIFIER:

1. INCLUDE THIS DETAIL ONLY IF THE GEOTECHNICAL REPORT INDICATES THAT AN UNSTABLE FOUNDATION (ONE WHICH WILL NOT ALLOW COMPACTION OR DEWATERING AS SPECIFIED) IS POSSIBLE. IF THIS CONDITION IS REPORTED BY THE GEOTECHNICAL ENGINEER, NOTIFY THE CITY'S PROJECT MANAGER.

2. ALWAYS INCLUDE COMPANION STANDARD DETAIL FOR PILE SUPPORTED MANHOLE FOR UNSTABLE SUBGRADE WITH THIS DETAIL. IF GEOTECHNICAL REPORT INDICATES HEAVING SUBGRADE IS LIKELY.

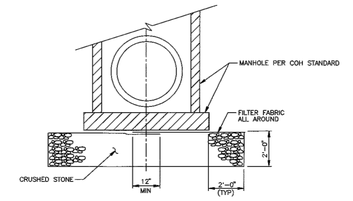

SECTION (A)

CITY OF HOUSTON
DEPARTMENT OF PUBLIC WORKS AND ENGINEERING
ENGINEERING, CONSTRUCTION AND REAL ESTATE DIVISION

SANITARY SEWER
CRUSHED STONE SUPPORTED
MANHOLE FOR WET STABLE TRENCH
(NOT TO SCALE)

APPROVED BY: CITY ENGINEER — APPROVED BY: DIRECTOR OF PUBLIC WORKS AND ENGINEERING
EFF DATE: OCT-01-2002 DWG NO: 02082-05

TYPE 1
OPEN PICK HOLE

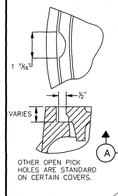

OTHER OPEN PICK HOLES ARE STANDARD ON CERTAIN COVERS.

1/2" x 2 1/2" RECESS (SEE SECTION OF COVER THRU RECESS)

NOTE:
23 1/2" MANHOLE COVER CAN BE USED ONLY FOR REPLACEMENT OF EXISTING MANHOLE COVER.

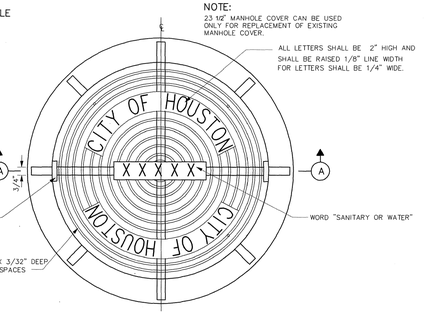

PLAN
23 1/2" MANHOLE COVER WITH FRAME

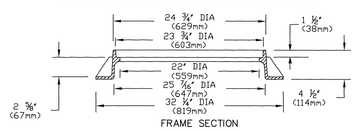

FRAME SECTION

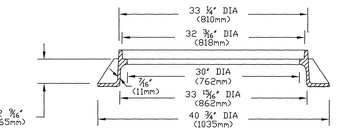

SECTION (A)

32" MANHOLE COVER WITH FRAME

1) NOTE: APPROXIMATE WEIGHTS.
FRAME- 170 LBS 77 kg
COVER- 270 LBS 123 kg
UNIT- 440 LBS 200 kg
2) MATERIAL- GRAY IRON ASTM A48 CL35B
3) CASTING TO MEET M306 PROOF LOAD SPECIFICATION
4) MODEL V-14240 ASY OR APPROVED EQUAL

CITY OF HOUSTON
DEPARTMENT OF PUBLIC WORKS AND ENGINEERING

SANITARY SEWER AND WATER
MANHOLE FRAME AND COVER
(NOT TO SCALE)

APPROVED BY: CITY ENGINEER — APPROVED BY: DIRECTOR OF PUBLIC WORKS AND ENGINEERING
EFF DATE: JUL-01-2016 DWG NO: 02090-01

HALF SECTION UNDER PAVEMENT — SYMMETRICAL ABOUT — HALF SECTION UNDER NATURAL GROUND

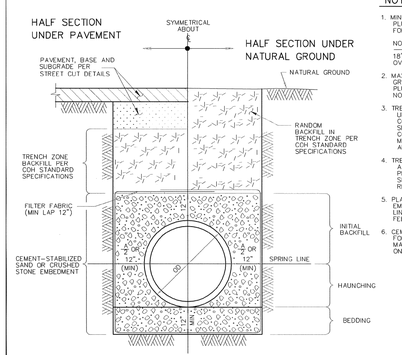

TYPICAL CROSS-SECTION

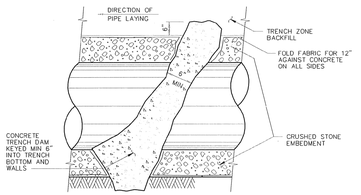

LONGITUDINAL SECTION ALONG PIPE ℄
AT EMBEDMENT TRENCH DAM

CITY OF HOUSTON
DEPARTMENT OF PUBLIC WORKS AND ENGINEERING

SANITARY SEWER EMBEDMENT
AND TRENCH ZONE BACKFILL
FOR DRY OR WET STABLE TRENCH
(NOT TO SCALE)

APPROVED BY: CITY ENGINEER — APPROVED BY: DIRECTOR OF PUBLIC WORKS AND ENGINEERING
EFF DATE: JUL-01-2016 DWG NO: 02317-01

NOTES:

1. MIN TRENCH WIDTH SHALL BE PIPE OD PLUS AN ALLOWANCE "A" FOR THE NOMINAL PIPE SIZE

NOMINAL PIPE SIZE	"A"
18" TO 30"	24"
OVER 30"	36"

2. MAX TRENCH WIDTH SHALL BE NOT GREATER THAN MIN TRENCH WIDTH PLUS 24 INCHES, UNLESS OTHERWISE NOTED.
3. TRENCH DAM MAY BE FORMED OR UNFORMED.ACTUAL SHAPE OF CONCRETE TRENCH DAM CROSS SECTION MAY BE DETERMINED BY CONTRACTOR IN FIELD, MEETING MINIMUM THICKNESS AND KEY DEPTH REQUIREMENTS.
4. TRENCH DAM SHALL BE PLACED AT LEAST 5 FT AWAY FROM ANY PIPELINE STRUCTURE SEE SPECIFICATIONS FOR OTHER REQUIREMENTS.
5. PLACE TRENCH DAMS IN CLASS I EMBEDMENTS AT THE MIDPOINT OF LINE SEGMENTS LONGER THAN 100 FEET BETWEEN MANHOLES.
6. CEMENT-STABILIZED SAND IS PREFERRED FOR EMBEDMENT, BUT CRUSHED STONE MAY BE USED ONLY WHEN SPECIFIED ON THE PLANS.

NOTES:

1. ACTUAL SHAPE OF CONCRETE TRENCH DAM CROSS SECTION MAY BE DETERMINED BY CONTRACTOR IN FIELD MEETING MINIMUM THICKNESS AND KEY DEPTH REQUIREMENTS.
2. THIS DETAIL SHALL BE USED WITH CEMENT STABILIZED SAND EMBEDMENT, OR OTHER CLASS II EMBEDMENT, IN WET STABLE TRENCH CONDITIONS.
3. PLACE TRENCH DAMS IN CLASS I EMBEDMENTS AT THE MIDPOINT OF LINE SEGMENTS LONGER THAN 100 FEET BETWEEN MANHOLES.

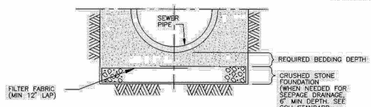

CROSS-SECTION
OF CRUSHED STONE FOUNDATION

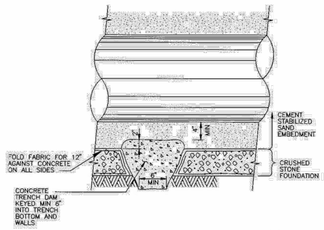

LONGITUDINAL SECTION ALONG PIPE ℄
AT FOUNDATION TRENCH DAM

CITY OF HOUSTON
DEPARTMENT OF PUBLIC WORKS AND ENGINEERING

SANITARY OR STORM SEWER
CRUSHED STONE FOUNDATION
FOR WET STABLE TRENCH
(NOT TO SCALE)

APPROVED BY: CITY ENGINEER — APPROVED BY: DIRECTOR OF PUBLIC WORKS AND ENGINEERING
EFF DATE: OCT-01-2002 DWG NO: 02317-02

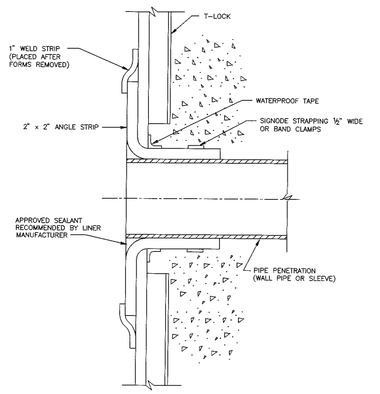

CITY OF HOUSTON
DEPARTMENT OF PUBLIC WORKS AND ENGINEERING
ENGINEERING, CONSTRUCTION AND REAL ESTATE DIVISION

SANITARY SEWER
SEALING PENETRATION THROUGH
PVC-LINED CONCRETE WALL
(NOT TO SCALE)

APPROVED BY: CITY ENGINEER — APPROVED BY: DIRECTOR OF PUBLIC WORKS AND ENGINEERING
EFF DATE: OCT-01-2002 DWG NO: 02531-06

ARCADIS
Infrastructure · Water · Environment · Buildings
1330 Post Oak Blvd, Suite 2250
Houston, TX 77056
Tel: 713-953-4800
Fax: 713-977-4620
www.arcadis.com
Texas Registered Engineering Firm F-533

SURVEYED BY: AMANI ENGR.
FB NO. P-6335

STATE OF TEXAS — DAVID F. RIDGWAY — 105134 — LICENSED PROFESSIONAL ENGINEER — 05/12/2026

CITY OF HOUSTON
HOUSTON PUBLIC WORKS

LIFT STATION REHABILITATION & RECONSTRUCTION
CONSENT DECREE

SANITARY SEWER
STANDARD DETAILS – II

D-8

WBS NUMBER	FOR CITY OF HOUSTON USE ONLY
R-000267-0175-4	
DRAWING SCALE	
AS NOTED	
CITY OF HOUSTON PM	
NP NAWARAJ PANTA, P.E.	
SHEET NO. 253 OF 312	

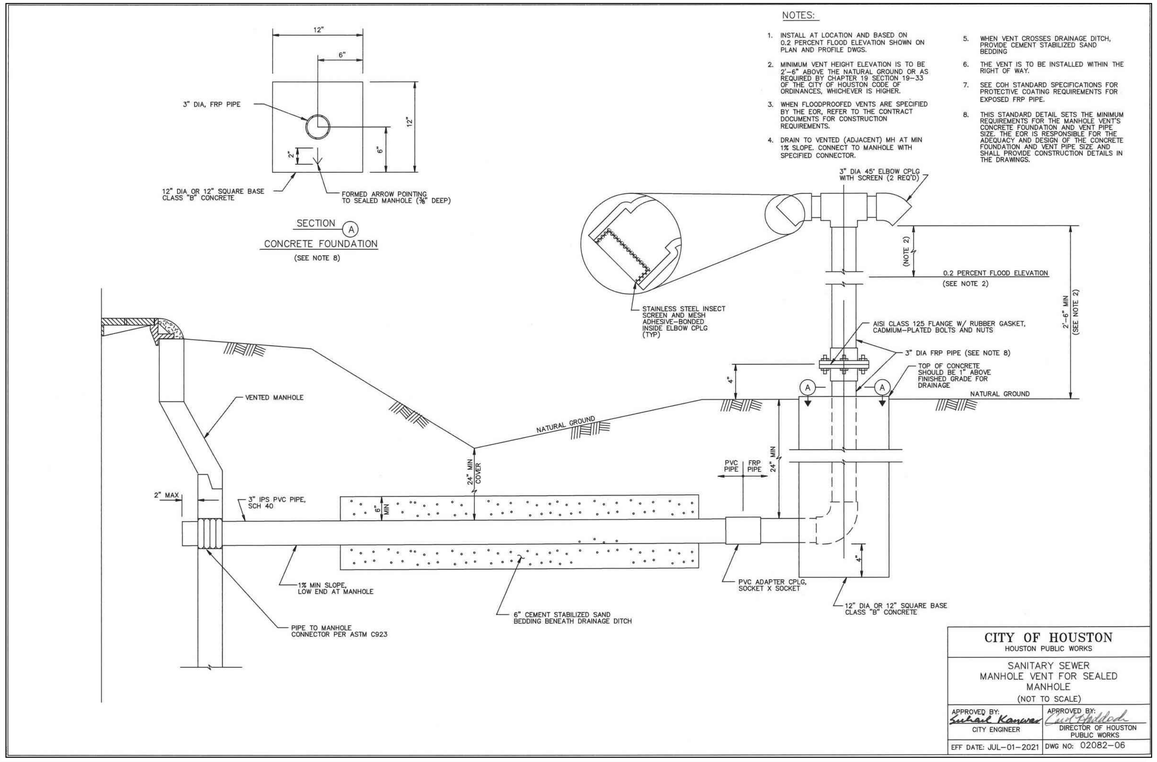

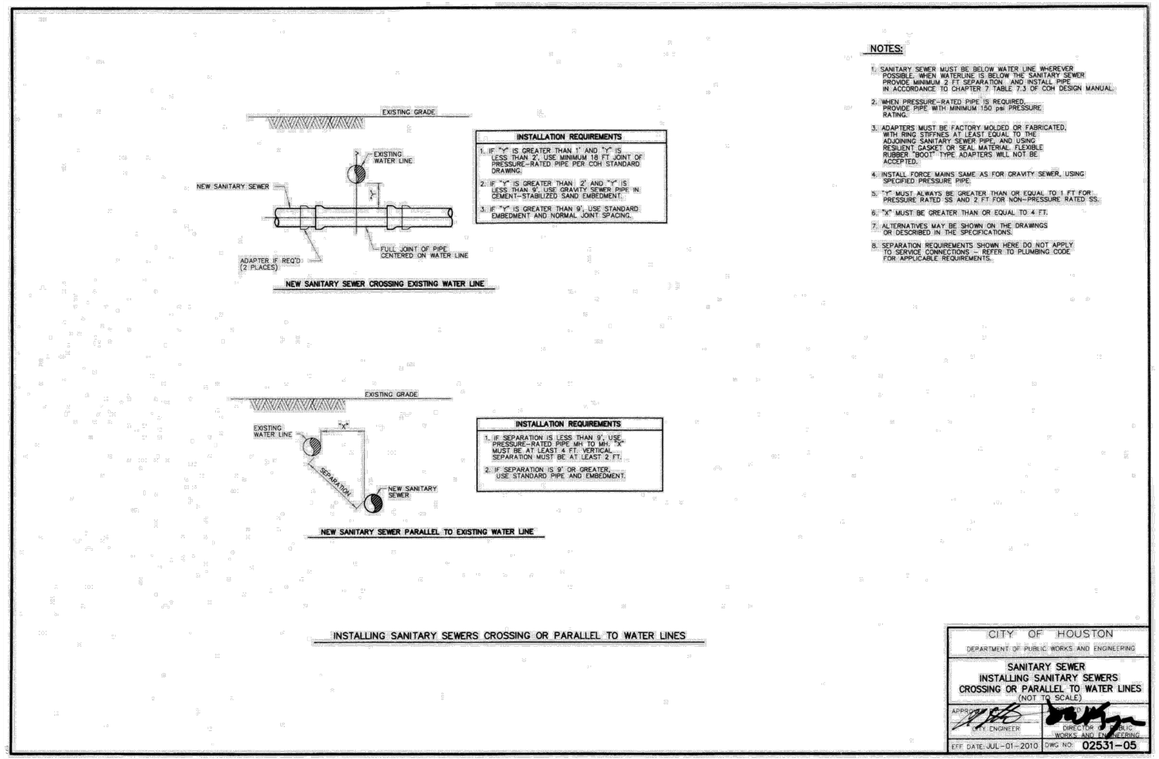

ARCADIS
Infrastructure · Water · Environment · Buildings
1330 Post Oak Blvd, Suite 2250
Houston, TX 77056
Tel: 713-953-4800
Fax: 713-977-4620
www.arcadis.com
Texas Registered Engineering Firm F-533

SURVEYED BY: AMANI ENGR.
FB NO. P-6335

STATE OF TEXAS
DAVID F. RIDGWAY
105134
LICENSED PROFESSIONAL ENGINEER
05/12/2016

CITY OF HOUSTON
HOUSTON PUBLIC WORKS

LIFT STATION REHABILITATION & RECONSTRUCTION CONSENT DECREE

SANITARY SEWER STANDARD DETAILS – III

D-9

WBS NUMBER	FOR CITY OF HOUSTON USE ONLY
R-000267-0175-4	
DRAWING SCALE	
AS NOTED	
CITY OF HOUSTON PM	
NP NAWARAJ PANTA, P.E.	
SHEET NO. 254 OF 312	

FILE PATH: C:\Users\omessan\DC\ACCDocs\Arcadis ACC US\AUS-30126616-Lift Station Rehab And Reconstruct CMAR\Project Files\10_WIP\10T Main PJ Folder\10T_Details\D-9_SANITARY SEWER-III.dwg
PLOT STYLE: COH.ctb PLOTTED: 11/20/2025 7:48 AM

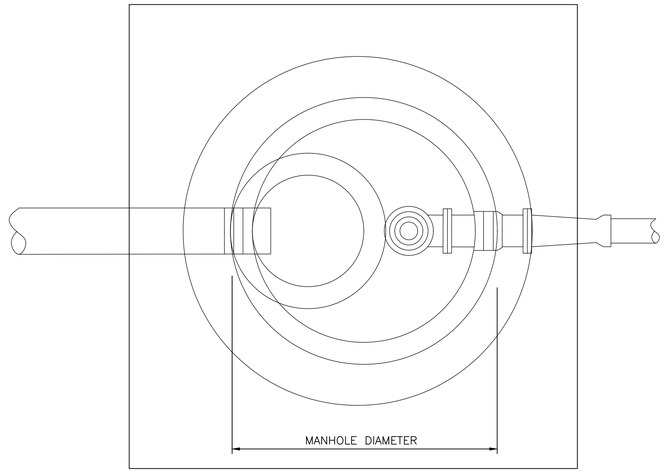

PLAN VIEW

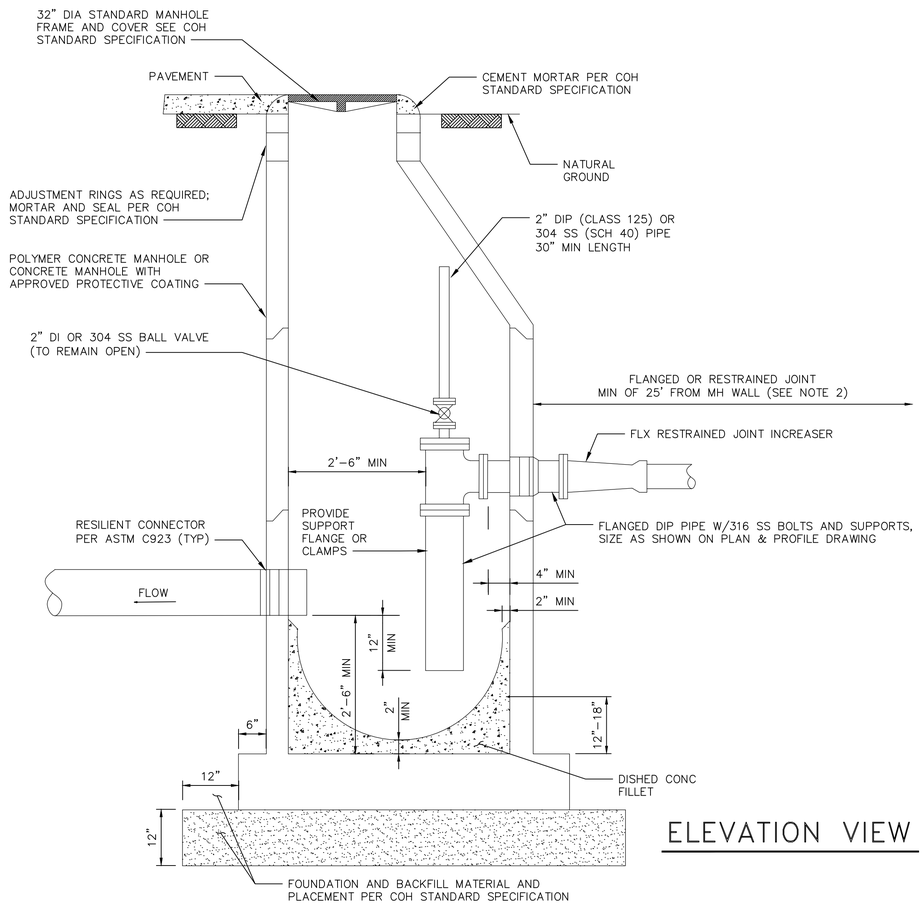

ELEVATION VIEW

MANHOLE FOR FORCE MAIN DISCHARGE (2 / –)

NOTES:

1. SEAT MANHOLE FRAME IN SEALANT PER COH STANDARD SPECIFICATION.
2. IF FORCE MAIN HAS BENDS WITHIN 25FT OF MANHOLE, EXTEND RESTRAINED JOINTS TO 25FT MINIMUM UPSTREAM OF BEND.
3. OMIT CEMENT MORTAR WHEN MANHOLE IS LOCATED IN PAVED AREA.
4. MINIMUM REINFORCING IN BASE SHALL BE 5 @ 8 E/W.
5. PRECAST RINGS SHALL BE PROVIDED FOR A COMBINED ADJUSTMENT HEIGHT OF AT LEAST 12". THE TOTAL HEIGHT OF THE ADJUSTMENT RINGS SHALL NOT EXCEED 1'-6".

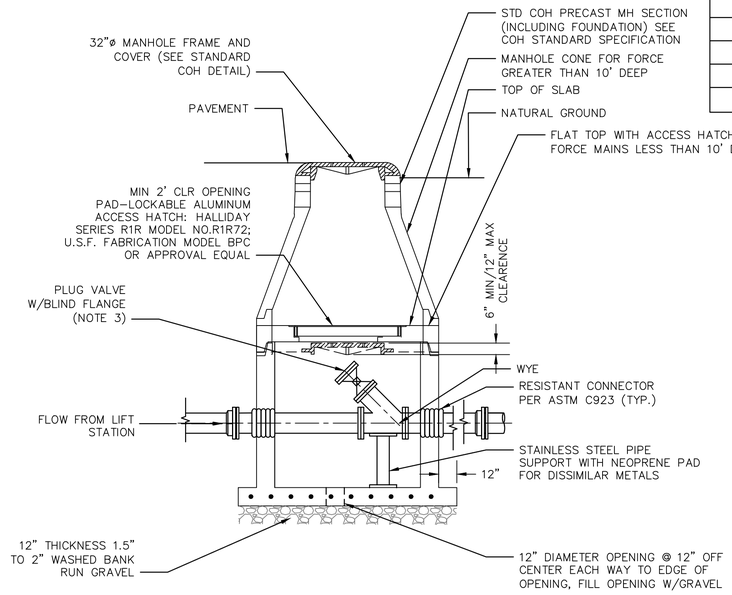

BELOW GROUND BYPASS DETAIL

BYPASS MANHOLE DETAIL (1 / –)

SCALE: NTS

MANHOLE SIZE (NOTE B)	
FORCEMAIN DIAMETER	MANHOLE DIAMETER
16"	6'-0"
18"	8'-0"
20"	8'-0"
24"	10'-0"

NOTES:

1. PROVIDE LINED DUCTILE IRON PIPE, THICK, CLASS 53, FOR FORCE MAIN WITHIN 12" OF OUTSIDE FACE OF MANHOLE. JOINTS WITHIN MANHOLE MAY BE FLANGED (AS SHOWN OR GROOVED PER ASTM 606) WITHIN MANHOLE, WITH 316 STAINLESS STEEL BOLTS.
2. MANHOLE TOP MAY BE CONCENTRIC CONE, OR FLAT TOP WITH ECCENTRIC OPENING. PROVIDE 32" FRAME AND COVER.
3. ENSURE MIN CLEARANCE OF 18" ON ALL SIDES. OFFSET VALVE ON HATCH/MH OPENING AS NEEDED TO OBTAIN CLEARANCE.

TABLE 02082-07

MANHOLE DIAMETER	4'-0"	5'-0"	6'-0"
MAX DISCHARGE SIZE	6"	14"	24"

ARCADIS
Infrastructure · Water · Environment · Buildings
1330 Post Oak Blvd, Suite 2250
Houston, TX 77056
Tel: 713-953-4800
Fax: 713-977-4620
www.arcadis.com
Texas Registered Engineering Firm F-533

SURVEYED BY: **AMANI ENGR.**
FB NO. P-6335

STATE OF TEXAS · DAVID F. RIDGWAY · 105134 · LICENSED PROFESSIONAL ENGINEER · 11/20/2025

CITY OF HOUSTON
HOUSTON PUBLIC WORKS

LIFT STATION REHABILITATION & RECONSTRUCTION CONSENT DECREE

SANITARY SEWER STANDARD DETAILS – IV

D-10

WBS NUMBER	FOR CITY OF HOUSTON USE ONLY
R-000267-0175-4	
DRAWING SCALE	
AS NOTED	
CITY OF HOUSTON PM	
NP NAWARAJ PANTA, P.E.	
SHEET NO. 255 OF 312	

FILE PATH: C:\Users\omesson\DC\ACCDocs\Arcadis ACC US\AUS-30126616-Lift Station Rehab And Reconstruct CMAR\Project Files\10_WIP\10T Main PJ Folder\10T_Details\D-10_SANITARY SEWER-IV.dwg
PLOT STYLE: COH.ctb PLOTTED: 11/20/2025 7:48 AM

02081–05

COH IS PHASING OUT BRICK. NEW DETAILS TO BE POSTED END OF 2019

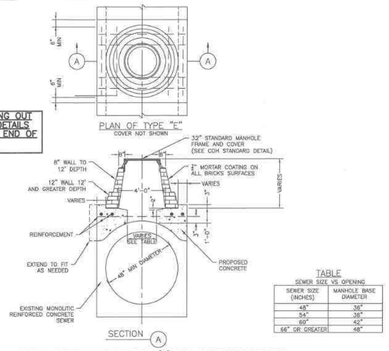

TABLE
SEWER SIZE VS OPENING

SEWER SIZE (INCHES)	MANHOLE BASE DIAMETER
48"	36"
54"	36"
60"	42"
66" OR GREATER	48"

STORM SEWER MANHOLE TYPE "E" FOR EXISTING MONOLITIC REINFORCED CONCRETE 48" DIAMETER AND GREATER
NTS

02081–06

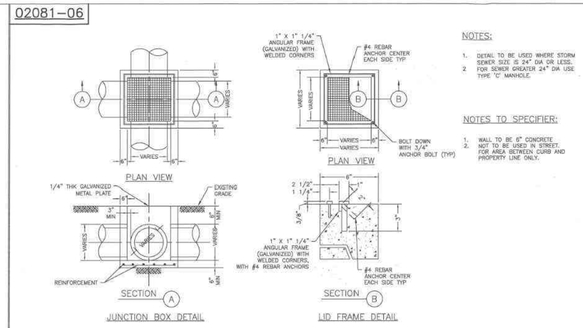

NOTES:
1. DETAIL TO BE USED WHERE STORM SEWER SIZE IS 24" DIA OR LESS.
2. FOR SEWER GREATER 24" DIA USE TYPE "C" MANHOLE.

NOTES TO SPECIFIER:
1. WALL TO BE 6" CONCRETE.
2. NOT TO BE USED IN STREET. FOR AREA BETWEEN CURB AND PROPERTY LINE ONLY.

STORM SEWER
JUNCTION BOX WITH LID OR GRATE TOP
FOR MAXIMUM OF 24" DIAMETER STORM SEWE4R5
NTS

02081–07

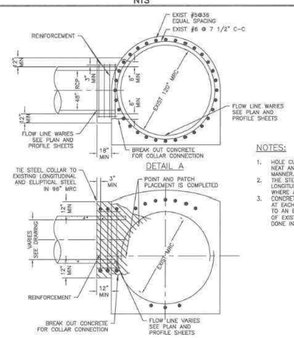

NOTES:
1. HOLE CUT IN WALL OF 120" MRC TO BE NEAT AND DONE IN WORKMAN LIKE MANNER.
2. THE STEEL COLLAR TO EXIST LONGITUDINAL AND ELLIPTICAL STEEL WHERE APPLICABLE.
3. CONCRETE COLLAR SHALL BE CONSTRUCTED AT EACH CONNECTION OF A PROPOSED RCP TO AN EXISTING MRC. HOLE CUT IN WALL OF EXISTING 95" MRC TO BE NEAT AND DONE IN WORKMAN LIKE MANNER.

LATERAL CONNECTION TO EXISTING
MONOLITHIC REINFORCED CONCRETE STORM SEWER
NTS

02081–08

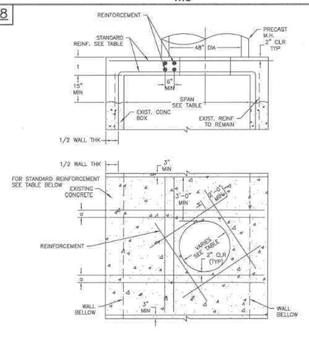

PROPOSED MANHOLE ON
EXISTING BOX STORM SEWER
NTS

FIRM INFORMATION | ENGINEER'S SEAL

CITY OF HOUSTON
HOUSTON PUBLIC WORKS

STORM SEWER
02081–05 THROUGH 08

APPROVED BY: CITY ENGINEER | APPROVED BY: DEPUTY DIRECTOR
APPROVED BY: DIRECTOR
EFFECTIVE DATE: JUL-01-2019
FOR CITY OF HOUSTON USE ONLY

SHEET NO.

02084–05

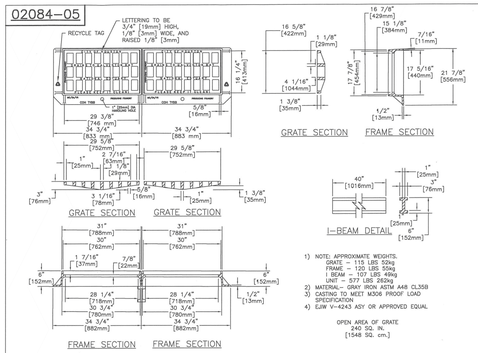

1) NOTE: APPROXIMATE WEIGHTS.
GRATE – 115 LBS 52kg
FRAME – 120 LBS 55kg
BEAM – 342 LBS 156kg
UNIT – 577 LBS 263kg
2) MATERIAL– GRAY IRON ASTM A48 CL35B
3) CASTING TO MEET M306 PROOF LOAD SPECIFICATION
4) EJIW V-4243 ASY OR APPROVED EQUAL

OPEN AREA OF GRATE
240 SQ. IN.
[1548 SQ. cm.]

STORM SEWER FRAME AND GRATE
FOR TYPE B–B INLET DOUBLE ASSEMBLY
NTS

02084–06

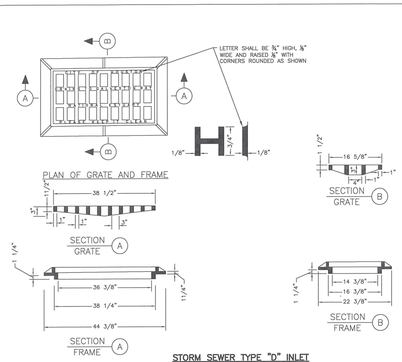

STORM SEWER TYPE "D" INLET
GRATE AND FRAME
NTS

02084–07

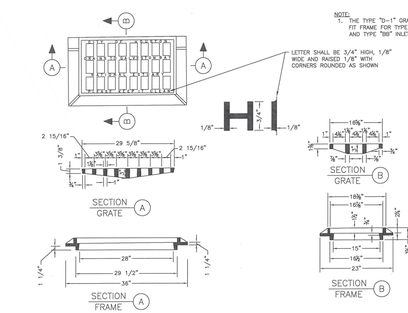

STORM SEWER TYPE "D–1" INLET
GRATE AND FRAME
NTS

02084–08

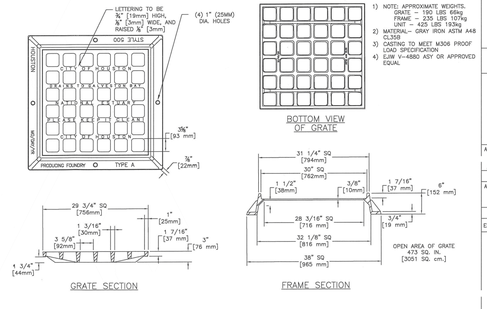

1) NOTE: APPROXIMATE WEIGHTS.
GRATE – 190 LBS 68kg
FRAME – 235 LBS 107kg
UNIT – 425 LBS 193kg
2) MATERIAL– GRAY IRON ASTM A48 CL35B
3) CASTING TO MEET M306 PROOF LOAD SPECIFICATION
4) EJIW V-4880 ASY OR APPROVED EQUAL

STORM SEWER TYPE "A"
INLET GRATE AND FRAME
NTS

FIRM INFORMATION | ENGINEER'S SEAL

CITY OF HOUSTON
HOUSTON PUBLIC WORKS

STORM SEWER
02084–05 THROUGH 08

APPROVED BY: CITY ENGINEER | APPROVED BY: DEPUTY DIRECTOR
APPROVED BY: DIRECTOR OF PUBLIC WORKS AND ENGINEERING
EFFECTIVE DATE: JUL-01-2019
FOR CITY OF HOUSTON USE ONLY

SHEET NO. XX OF XX

MODEL ST3G: REMOVABLE INSTALLATION WITH VERTICAL GRATING

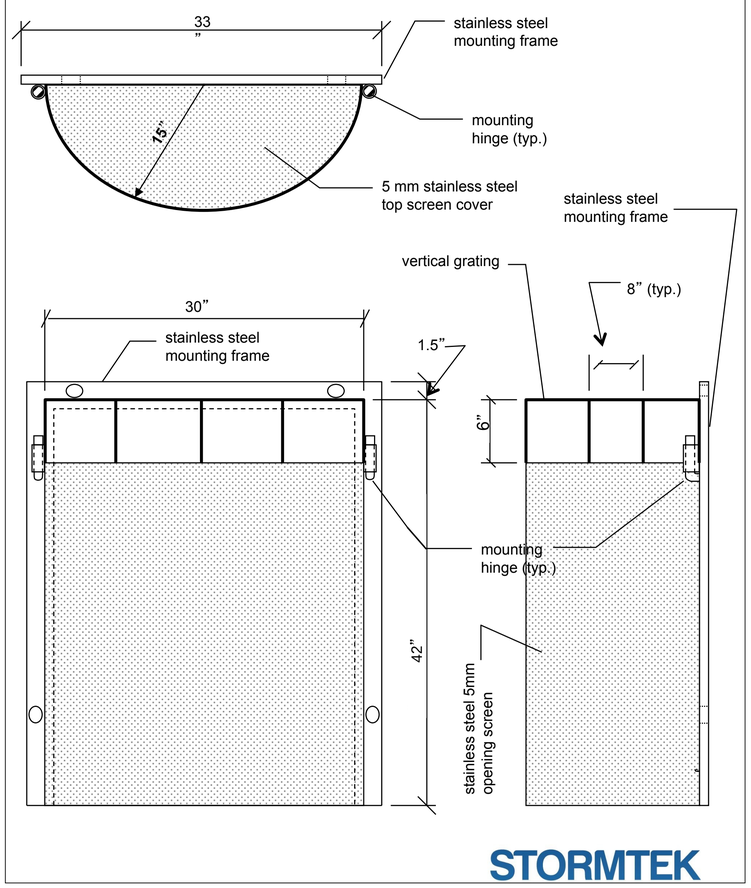

STORMTEK

ARCADIS
Infrastructure · Water · Environment · Buildings
1330 Post Oak Blvd, Suite 2250
Houston, TX 77056
Tel: 713–953–4800
Fax: 713–977–4620
www.arcadis.com
Texas Registered Engineering Firm F–533

SURVEYED BY: AMANI ENGR.
FB NO. P–6335

STATE OF TEXAS
DAVID F. RIDGWAY
105134
LICENSED
PROFESSIONAL ENGINEER
03/12/2016

CITY OF HOUSTON
HOUSTON PUBLIC WORKS

LIFT STATION REHABILITATION & RECONSTRUCTION
CONSENT DECREE

STORM SEWER STANDARD DETAILS – I

D–11

WBS NUMBER	FOR CITY OF HOUSTON USE ONLY
R–000267–0175–4	
DRAWING SCALE	
AS NOTED	
CITY OF HOUSTON PM	
NP NAWARAJ PANTA, P.E.	
SHEET NO. 256 OF 312	

FILE PATH: C:\Users\omesson\DC\ACCDocs\Arcadis ACC US\AUS–30126616–Lift Station Rehab And Reconstruct CMAR\Project Files\10_WIP\10T Main PJ Folder\10T_Details\D–11_STORM SEWER–I.dwg
PLOT STYLE: COH.ctb PLOTTED: 11/20/2025 7:49 AM

FILE PATH: C:\Users\omessan\DC\ACCDocs\Arcadis ACC US\AUS-30126616-Lift Station Rehab And Reconstruct CMAR\Project Files\10_WIP\10T Main PJ Folder\10T_Details\D-12_STORM SEWER-II.dwg
PLOT STYLE: COH.ctb PLOTTED: 11/20/2025 7:49 AM

02084-09

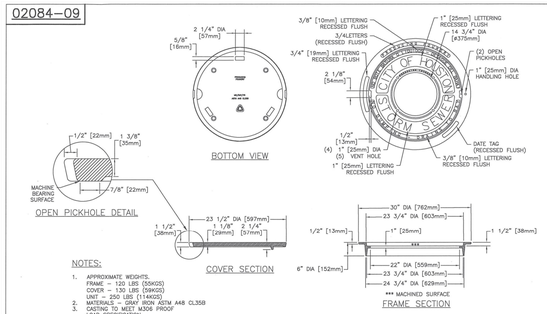

NOTES:
1. APPROXIMATE WEIGHTS.
   FRAME – 120 LBS (55KGS)
   COVER – 130 LBS (59KGS)
   UNIT – 250 LBS (114KGS)
2. MATERIALS – GRAY IRON ASTM A48 CL35B
3. CASTING TO MEET M306 PROOF LOAD SPECIFICATION
4. EJIW V-1814 A5Y OR APPROVED EQUAL

STORM SEWER TYPE "C-1, C-2, C-2A" AND "H-2" INLET FRAME AND COVER
NTS

02084-10

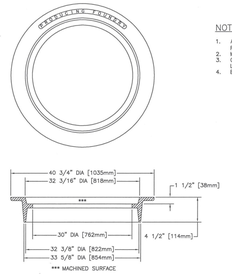

NOTES:
1. APPROXIMATE WEIGHTS.
   FRAME – 190 LBS (86KGS)
2. MATERIALS – GRAY IRON ASTM A48 CL35B
3. CASTING TO MEET M306 PROOF LOAD SPECIFICATION
4. EJIW V-1816 A5Y OR APPROVED EQUAL

32" INVERTED MANHOLE FRAME
NTS

02084-11

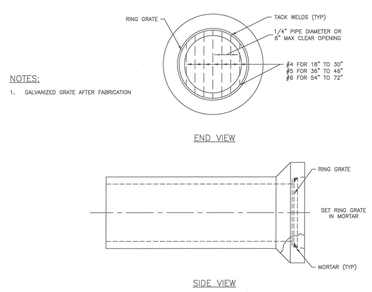

NOTES:
1. GALVANIZED GRATE AFTER FABRICATION

STORM SEWER RING GRATE FOR OPEN END OF 18" TO 72" RCP STUBS TO DITCH
NTS

02317-02

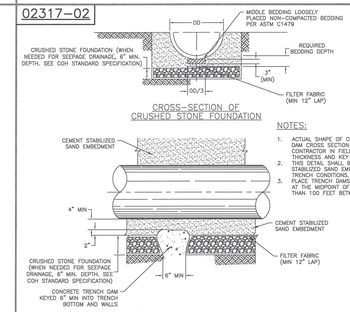

NOTES:
1. ACTUAL SHAPE OF CONCRETE TRENCH DAM CROSS SECTION MAY BE DETERMINED BY CONTRACTOR IN FIELD, MEETING MINIMUM THICKNESS AND KEY DEPTH REQUIREMENTS.
2. CONCRETE SHALL NOT BE USED WITH CEMENT-STABILIZED SAND EMBEDMENT, IN WET STABLE TRENCH CONDITIONS.
3. PLACE TRENCH DAMS IN CLASS I EMBEDMENTS AT THE MIDPOINT OF LINE SEGMENTS LONGER THAN 100 FEET BETWEEN MANHOLES.

SANITARY OR STORM SEWER CRUSHED STONE FOUNDATION FOR WET STABLE TRENCH
NTS

FIRM INFORMATION | ENGINEER'S SEAL

CITY OF HOUSTON
HOUSTON PUBLIC WORKS

STORM SEWER
02084-09 THROUGH 11
AND 02317-02

APPROVED BY: CITY ENGINEER | APPROVED BY: DEPUTY DIRECTOR
APPROVED BY: DIRECTOR
EFFECTIVE DATE: JUL-01-2019
FOR CITY OF HOUSTON USE ONLY
SHEET NO.

02317-03

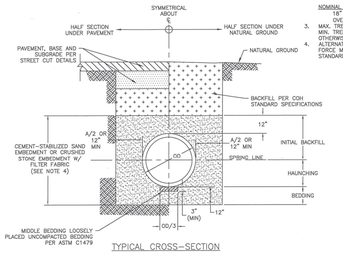

NOTES:
1. THIS DETAIL MAY BE USED ONLY FOR DRY STABLE TRENCH CONDITIONS PER COH STANDARD, SEE COH STANDARD SPECIFICATION FOR REQUIREMENTS IN OTHER CONDITIONS.
2. MIN. TRENCH WIDTH SHALL BE PIPE OD PLUS AN ALLOWANCE "A" FOR THE NOMINAL PIPE SIZE:

NOMINAL PIPE SIZE	"A"
18" TO 30"	24"
OVER 30"	36"

3. MAX. TRENCH WIDTH SHALL BE NOT GREATER THAN MIN. TRENCH WIDTH PLUS 24 INCHES, UNLESS OTHERWISE NOTED.
4. ALTERNATIVE EMBEDMENT BACKFILL MATERIALS FOR FORCE MAINS MAY BE ALLOWED, SEE COH STANDARD SPECIFICATIONS.

SANITARY OR STORM SEWER BEDDING AND BACKFILL FOR DRY STABLE TRENCH
NTS

02317-05

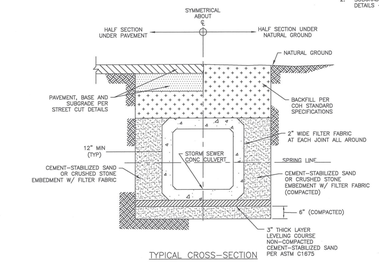

NOTES:
1. WHERE MULTIPLE BOX SEWER ARE USED IN THE SAME TRENCH, MIN OUTSIDE TO OUTSIDE BOX SEWER SEPARATION SHALL BE 6".
2. SUBGRADE AND PAVEMENT FOR STREET CUT DETAILS – 02951.

PRECAST CONCRETE BOX STORM SEWER BEDDING AND BACKFILL FOR DRY STABLE TRENCH
NTS

02317-06

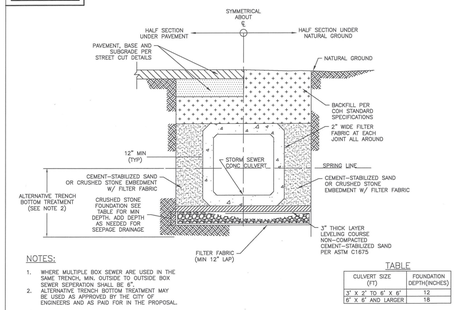

NOTES:
1. WHERE MULTIPLE BOX SEWER ARE USED IN THE SAME TRENCH, MIN. OUTSIDE TO OUTSIDE BOX SEWER SEPARATION SHALL BE 6".
2. ALTERNATIVE TRENCH BOTTOM TREATMENT MAY BE USED AS APPROVED BY THE CITY OF ENGINEERS AND AS PAID FOR IN THE PROPOSAL.

TABLE

CULVERT SIZE (FT)	FOUNDATION DEPTH(INCHES)
3' X 3' TO 6' X 6'	12
6' X 6' AND LARGER	18

PRECAST CONCRETE BOX STORM SEWER BEDDING AND BACKFILL FOR WET STABLE TRENCH
NTS

02317-07

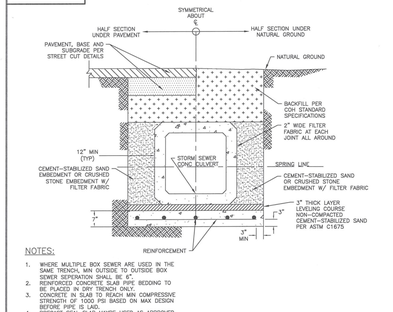

NOTES:
1. WHERE MULTIPLE BOX SEWER ARE USED IN THE SAME TRENCH, MIN OUTSIDE TO OUTSIDE BOX SEWER SEPARATION SHALL BE 6".
2. REINFORCEMENT IN PIPE BEDDING TO BE PROVIDED IN DRY TRENCH ONLY.
3. CONCRETE IN SLAB TO REACH MIN COMPRESSIVE STRENGTH OF 1000 PSI BASED ON MAX DESIGN BEFORE PIPE IS LAID.
4. PRECAST SEAL SLAB MAYBE USED AS APPROVED BY CITY ENGINEER.

PRECAST CONCRETE BOX STORM SEWER BEDDING AND BACKFILL WITH SEAL SLAB
NTS

FIRM INFORMATION | ENGINEER'S SEAL

CITY OF HOUSTON
HOUSTON PUBLIC WORKS

STORM SEWER
02317-03 THROUGH 07

APPROVED BY: CITY ENGINEER | APPROVED BY: DEPUTY DIRECTOR
APPROVED BY: DIRECTOR
EFFECTIVE DATE: JUL-01-2019
FOR CITY OF HOUSTON USE ONLY
SHEET NO.

ARCADIS
Infrastructure · Water · Environment · Buildings
1330 Post Oak Blvd, Suite 2250
Houston, TX 77056
Tel: 713-953-4800
Fax: 713-977-4620
www.arcadis.com
Texas Registered Engineering Firm F-533

SURVEYED BY: AMANI ENGR.
FB NO. P-6335

STATE OF TEXAS · DAVID F. RIDGWAY · 105134 · LICENSED PROFESSIONAL ENGINEER · 11/20/2025

CITY OF HOUSTON
HOUSTON PUBLIC WORKS

LIFT STATION REHABILITATION & RECONSTRUCTION CONSENT DECREE

STORM SEWER STANDARD DETAILS – II

D-12

WBS NUMBER	FOR CITY OF HOUSTON USE ONLY
R-000267-0175-4	
DRAWING SCALE	
AS NOTED	
CITY OF HOUSTON PM	
NP NAWARAJ PANTA, P.E.	
SHEET NO. 257 OF 312	

02632-09

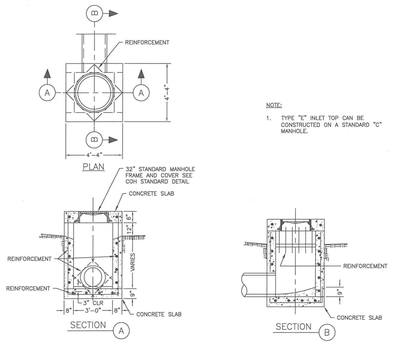

NOTE:
1. TYPE "E" INLET TOP CAN BE CONSTRUCTED ON A STANDARD "C" MANHOLE.

STORM SEWER TYPE "E" INLET
NTS

02632-10

COH IS PHASING OUT BRICK. NEW DETAILS TO BE POSTED END OF 2019

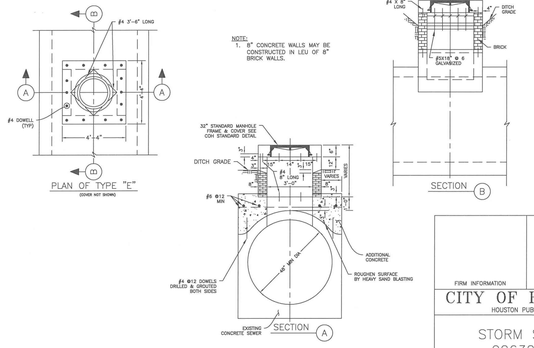

NOTE:
1. 8" CONCRETE WALLS MAY BE CONSTRUCTED IN LIEU OF 8" BRICK WALLS.

STORM SEWER TYPE "E" INLET ON EXIST MONOLITHIC CONC SEWERS OF 48" DIA & GREATER
NTS

FIRM INFORMATION | ENGINEER'S SEAL

CITY OF HOUSTON
HOUSTON PUBLIC WORKS

STORM SEWER
02632-09
AND 02632-10

APPROVED BY: CITY ENGINEER
APPROVED BY: DEPUTY DIRECTOR
APPROVED BY: DIRECTOR
EFFECTIVE DATE: JUL-01-2019
FOR CITY OF HOUSTON USE ONLY

SHEET NO.

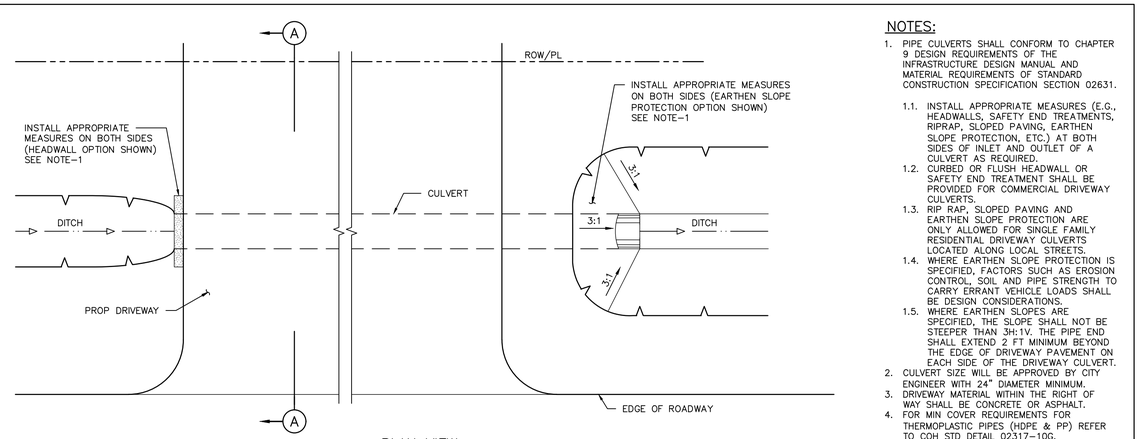

PLAN VIEW
STANDARD OPEN DITCH DRIVEWAY

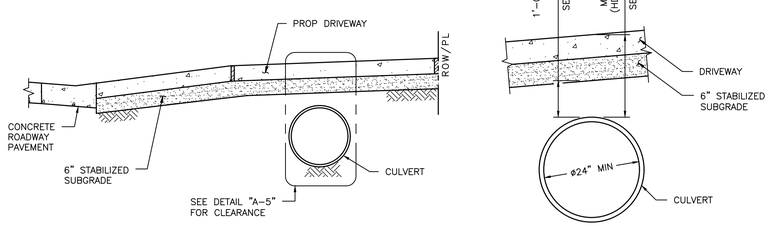

NOTES:
1. PIPE CULVERTS SHALL CONFORM TO CHAPTER 9 DESIGN REQUIREMENTS OF THE INFRASTRUCTURE DESIGN MANUAL AND MATERIAL REQUIREMENTS OF STANDARD CONSTRUCTION SPECIFICATION SECTION 02631.
   1.1. INSTALL APPROPRIATE MEASURES (E.G., HEADWALLS, SAFETY END TREATMENTS, RIPRAP, SLOPED PAVING, EARTHEN SLOPE PROTECTION, ETC.) AT BOTH SIDES OF INLET AND OUTLET OF A CULVERT AS REQUIRED.
   1.2. CURBED OR FLUSH HEADWALL OR SAFETY END TREATMENT SHALL BE PROVIDED FOR COMMERCIAL DRIVEWAY CULVERTS.
   1.3. RIP RAP, SLOPED PAVING AND EARTHEN SLOPE PROTECTION ARE ONLY ALLOWED FOR SINGLE FAMILY RESIDENTIAL DRIVEWAY CULVERTS LOCATED ALONG LOCAL STREETS.
   1.4. WHERE EARTHEN SLOPE PROTECTION IS SPECIFIED, FACTORS SUCH AS EROSION CONTROL, SOIL AND PIPE STRENGTH TO CARRY ERRANT VEHICLE LOADS SHALL BE DESIGN CONSIDERATIONS.
   1.5. WHERE EARTHEN SLOPES ARE SPECIFIED, THE SLOPE SHALL NOT BE STEEPER THAN 3H:1V. THE PIPE END SHALL EXTEND 2 FT MINIMUM BEYOND THE EDGE OF DRIVEWAY PAVEMENT ON EACH SIDE OF THE DRIVEWAY CULVERT.
2. CULVERT SIZE WILL BE APPROVED BY CITY ENGINEER WITH 24" DIAMETER MINIMUM.
3. DRIVEWAY MATERIAL WITHIN THE RIGHT OF WAY SHALL BE CONCRETE OR ASPHALT.
4. FOR MIN COVER REQUIREMENTS FOR THERMOPLASTIC PIPES (HDPE & PP) REFER TO COH STD DETAIL 02317-10G.
5. FOR RCP WHERE STANDARD 1'-0" CLEARANCE IS NOT FEASIBLE, MINIMUM CLEARANCE OF 6" IS ALLOWED WHEN APPROVED BY THE OFFICE OF THE CITY ENGINEER (OCE).
6. DITCH FLOW LINE DIRECTION DEPICTED IS SHOWN AS AN EXAMPLE AND MAY NOT MATCH SITE SPECIFIC CONDITIONS. REFER TO CONTRACT DRAWINGS FOR FLOW LINE DIRECTION AND ELEVATIONS.

CITY OF HOUSTON
HOUSTON PUBLIC WORKS STANDARD

DRIVEWAYS WITH CULVERTS ON OPEN DITCH TYPE STREETS

(SCALE: NOT TO SCALE)

APPROVED BY:
CITY ENGINEER
CITY TRAFFIC ENGINEER
DIRECTOR OF HPW

EFF DATE: MAR-02-2026 | DWG NO: 02754-02

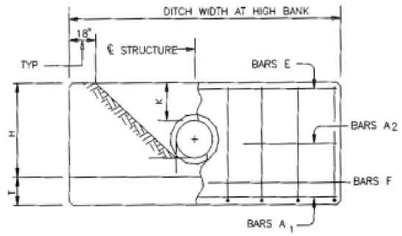

ELEVATION

TABLE OF CONSTANT DIMENSIONS				
DIA OF PIPE,D	K	H	T	E
12'	1'-0"	2'-9"	9"	1'-9"
15"	1'-0"	2'-11"	9"	1'-9"
18"	1'-0"	3'-2"	9"	1'-9"
21'	1'-0"	3'-5"	9"	2'-0"
24"	1'-0"	3'-8"	9"	2'-0"
27"	1'-0"	3'-11"	9"	2'-3"
30'	1'-0"	4'-2"	9"	2'-3"

TABLE OF REINFORCING STEEL			
BAR	SIZE	SPA	NO.
A1	# 5	~	2
A2	# 5	1'-6"	~
E	# 5	~	2
F1	# 5	1'-0"	~
F2	# 5	1'-0"	~

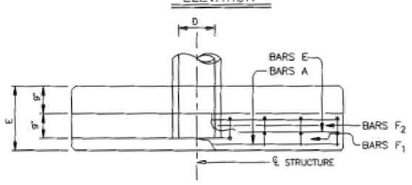

PLAN OF NON-SKEWED PIPES

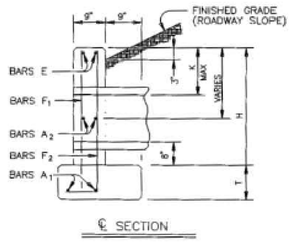

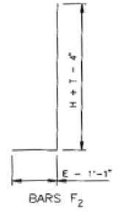

GENERAL NOTES:
1. DESIGNED ACCORDING TO CURRENT AASHTO STANDARD AND INTERIM SPECIFICATIONS.
2. REINFORCING STEEL SHALL BE PLACED WITH THE CENTER OF THE OUTSIDE LAYER OF BARS 2" FROM THE SURFACE OF THE CONCRETE.
3. ALL REINFORCING STEEL SHALL BE GRADE 60.
4. ALL CONCRETE SHALL BE CLASS "A" AND SHALL HAVE A MINIMUM 28 DAY COMPRESSIVE STRENGTH OF 4000 PSI.

HEADWALL DETAIL

N.T.S.

ARCADIS
Infrastructure · Water · Environment · Buildings
1330 Post Oak Blvd, Suite 2250
Houston, TX 77056
Tel: 713-953-4800
Fax: 713-977-4620
www.arcadis.com
Texas Registered Engineering Firm F-533

SURVEYED BY: AMANI ENGR.
FB NO. P-6335

STATE OF TEXAS
DAVID F. RIDGWAY
105134
LICENSED PROFESSIONAL ENGINEER
03/12/2026

CITY OF HOUSTON
HOUSTON PUBLIC WORKS

LIFT STATION REHABILITATION & RECONSTRUCTION CONSENT DECREE

STORM SEWER STANDARD DETAILS – III

D-13

WBS NUMBER	FOR CITY OF HOUSTON USE ONLY
R-000267-0175-4	
DRAWING SCALE	
AS NOTED	
CITY OF HOUSTON PM	
NP NAWARAJ PANTA, P.E.	
SHEET NO. 258 OF 312	

FILE PATH: C:\Users\omessan\DC\ACCDocs\Arcadis ACC US\AUS-30126616-Lift Station Rehab And Reconstruct CMAR\Project Files\10_WIP\10T Main PJ Folder\10T_Details\D-13_STORM SEWER-III.dwg
PLOT STYLE: Con_ctb_23BE0F1Eb 3/12/2026 9:06 AM

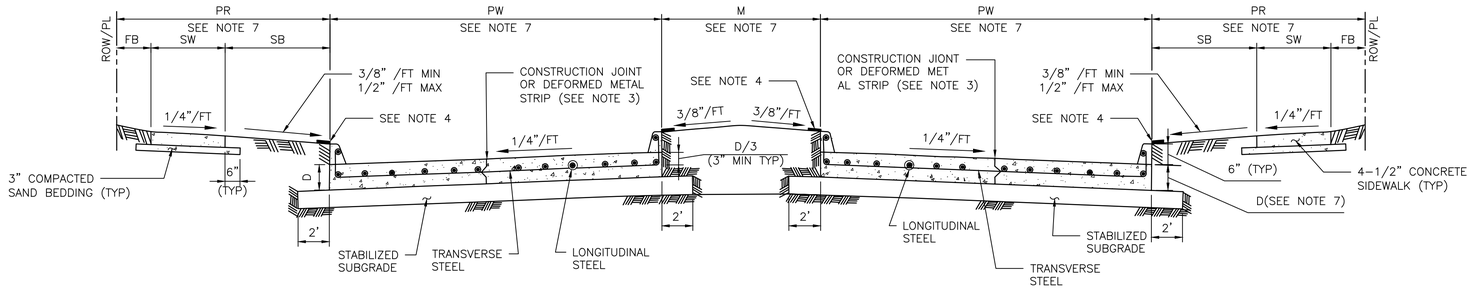

TYPICAL DOUBLE ROADWAY SECTION FOR CONCRETE PAVEMENT WITH CURBS

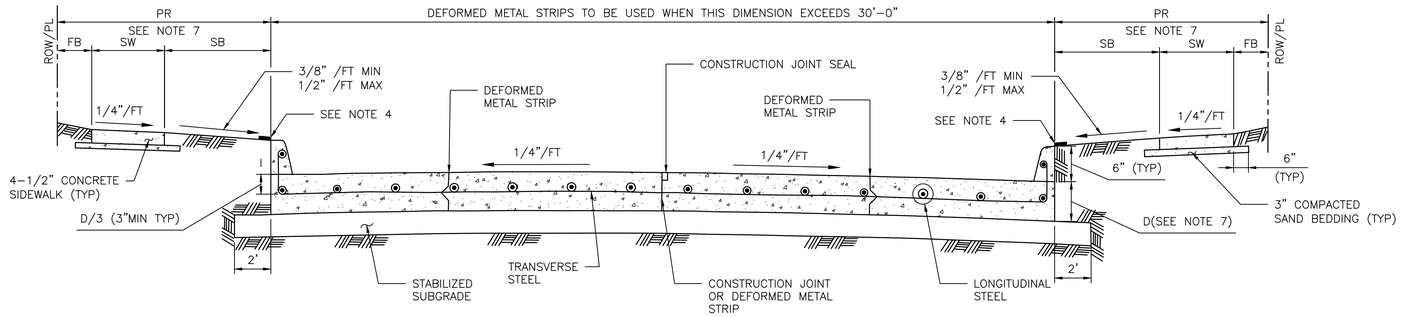

TYPICAL SINGLE ROADWAY SECTION FOR CONCRETE PAVEMENT WITH CURBS

TABLE 1

REINFORCING STEEL BAR SIZES AND SPACINGS FOR VARIOUS PAVEMENT THICKNESSES (D) WITH: MAXIMUM TRANSVERSE CONTROL JOINT SPACING = 20'-0"
MAXIMUM EXPANSION JOINT SPACING = 80'-0"
fc' = 4,000 PSI/28 DAYS AND FY = 60,000 PSI

PAVEMENT THICKNESS 'D' (IN)	PAVEMENT WIDTH 'PW' (FT)	LONGITUDINAL STEEL									TRAVERSE STEEL		
		#4 BARS			#5 BARS			#6 BARS			#4 BARS	#5 BARS	#6 BARS
		NUMBER OF BARS	SPACING (IN)	END BAR SPACING (IN)	NUMBER OF BARS	SPACING (IN)	END BAR SPACING (IN)	NUMBER OF BARS	SPACING (IN)	END BAR SPACING (IN)	SPACING (IN)	SPACING (IN)	SPACING (IN)
6	28	17	20.50	4.00	–	–	–	–	–	–	36	–	–
7	25	17	18.25	4.00	–	–	–	–	–	–	36	–	–
7	35	24	18.00	3.00	–	–	–	–	–	–	36	–	–
7	36	25	17.75	3.00	–	–	–	–	–	–	36	–	–
7	37	25	18.25	3.00	–	–	–	–	–	–	36	–	–
7	41	28	18.00	3.00	–	–	–	–	–	–	36	–	–
7	45	31	17.75	3.75	–	–	–	–	–	–	36	–	–
8	25	20	15.50	2.75	13	24.50	3.0	–	–	–	36	36	–
8	34	27	15.50	2.50	17	25.00	4.0	–	–	–	36	36	–
8	35	27	16.00	2.00	18	24.25	4.0	–	–	–	36	36	–
8	36	28	15.75	3.25	18	25.00	3.0	–	–	–	30	36	–
8	44	24	15.75	4.00	22	24.75	4.0	–	–	–	30	36	–
8	45	35	15.75	2.25	23	24.25	3.0	–	–	–	30	36	–
9	25	22	14.00	3.00	14	22.50	4.0	–	–	–	36	36	–
9	34	31	13.50	2.00	19	22.25	3.5	–	–	–	30	36	–
9	35	31	13.75	3.75	20	21.75	3.5	–	–	–	30	36	–
9	36	32	13.75	3.00	21	21.25	3.5	–	–	–	30	36	–
9	44	39	13.75	2.75	25	21.75	3.0	–	–	–	24	36	–
9	45	39	14.00	4.00	26	21.25	4.5	–	–	–	24	36	–
10	25	24	12.75	3.50	17	18.25	4.0	–	–	–	36	36	36
10	34	33	12.50	4.00	21	20.00	4.0	–	–	–	30	36	36
10	35	34	12.50	3.75	23	18.75	4.0	–	–	–	30	36	36
10	36	35	12.50	3.50	24	18.50	3.0	–	–	–	30	36	36
10	44	44	12.00	4.00	29	18.50	4.5	–	–	–	24	36	36
10	45	44	12.50	3.00	29	19.00	3.0	–	–	–	24	36	36
11	25	27	11.25	3.00	17	18.25	4.0	12	26.75	3	36	36	36
11	34	36	11.50	2.75	24	17.50	2.5	17	25.00	4	24	36	36
11	35	37	11.50	3.00	24	18.00	3.0	17	25.75	4	24	36	36
11	36	40	11.00	2.00	25	17.75	3.0	17	26.50	4	24	36	36
11	44	48	11.125	2.50	30	18.00	3.0	21	26.00	4	24	36	36
11	45	49	11.125	3.00	31	17.75	4.0	22	25.50	3	24	36	36
12	25	–	–	–	19	16.25	4.0	13	24.50	3	36	36	36
12	34	–	–	–	26	16.00	4.0	18	23.50	4	24	36	36
12	35	–	–	–	26	16.50	4.0	19	23.00	3	24	36	36
12	36	–	–	–	27	16.25	4.5	20	22.25	4.5	24	36	36
12	44	–	–	–	33	16.25	4.0	24	22.50	5	24	30	36
12	45	–	–	–	35	15.75	3.0	25	22.25	3	24	30	36

MINIMUM LAP LENGTH (L):
A. # 4 BARS ; L = 22 INCHES
B. # 5 BARS ; L = 27 INCHES
C. # 6 BARS ; L = 32 INCHES

NOTES:

1. THE MAXIMUM WIDTH BETWEEN LONGITUDINAL JOINTS SHALL NOT EXCEED 15'-0".
2. ALL EARTHEN AREAS ARE TO BE HYDROMULCHED UNLESS SHOWN OTHERWISE ON DRAWINGS.
3. CONTRACTOR MAY SAW CUT IN LIEU OF DEFORMED METAL STRIP.
4. USE STRIP OF SOD GRASS TO PREVENT EROSION UNTIL STAND OF GRASS IS ESTABLISHED.
5. AN EQUAL OR LARGER AREA OF WELDED REINFORCEMENT BAR CONFORMING TO ASTM A497, MAY BE SUBSTITUTED FOR REBARS LISTED IN TABLE 1.
6. IF AVAILABLE ROW IS NOT SUFFICIENT TO ACCOMMODATE SIDEWALK WIDTH (SW) ACCORDING TO IDM REQUIREMENTS, ENGINEER SHALL OBTAIN A VARIANCE FROM THE CITY ENGINEER.
7. REFER TO CONTRACT DRAWINGS FOR PAVEMENT WIDTH (PW) AND PAVEMENT THICKNESS (D), MEDIAN (M), PEDESTRIAN REALM (PR), SIDEWALK (SW), FRONTAGE BUFFER (FB), AND SAFETY BUFFER (SB) WIDTHS.

DISCLAIMER:
THE USE OF THIS STANDARD IS GOVERNED BY THE TEXAS ENGINEERING PRACTICE ACT. THE DESIGN REQUIREMENTS ON THIS STANDARD DO NOT PURPORT TO ADDRESS ALL OF THE SAFETY CONCERNS ASSOCIATED WITH THEIR USE. THE ENGINEER OF RECORD (EOR) IS TO REVIEW THESE DESIGN REQUIREMENTS AND BY AUTHORIZING THEIR USE, ACCEPTS RESPONSIBILITY FOR THEIR APPLICABILITY, ADEQUACY AND SAFETY. NO WARRANTY OF ANY KIND IS MADE BY THE CITY OF HOUSTON FOR ANY PURPOSES WHATSOEVER. THE CITY OF HOUSTON ASSUMES NO RESPONSIBILITY FOR INCORRECT RESULTS OR DAMAGES RESULTING FROM ITS USE.

EFF DATE: NOV-27-2023

DWG NO: 02751-01

ARCADIS
Infrastructure · Water · Environment · Buildings
1330 Post Oak Blvd, Suite 2250
Houston, TX 77056
Tel: 713-953-4800
Fax: 713-977-4620
www.arcadis.com
Texas Registered Engineering Firm F-533

SURVEYED BY: AMANI ENGR.
FB NO. P-6335

FOR INTERIM REVIEW ONLY NOT INTENDED FOR PERMIT, BIDDING OR CONSTRUCTION PURPOSES.
ENGINEER:
DAVID F. RIDGWAY
P.E. SERIAL NO.105134
0X/XX/2024

CITY OF HOUSTON

HOUSTON PUBLIC WORKS STANDARD

LIFT STATION REHABILITATION & RECONSTRUCTION CONSENT DECREE

CONCRETE PAVEMENT DETAILS

D-14

WBS NUMBER	FOR CITY OF HOUSTON USE ONLY
R-000267-0175-4	
DRAWING SCALE	
NOT TO SCALE	
CITY OF HOUSTON PM	
NITHAWARAJ PANTA, P.E.	
SHEET NO. 259 OF 312	

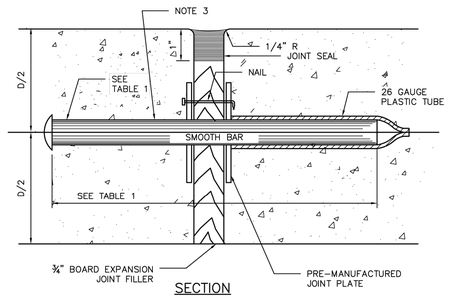

SECTION

DOWEL TYPE EXPANSION JOINT

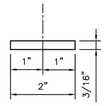

PLAN VIEW

JOINT PLATE

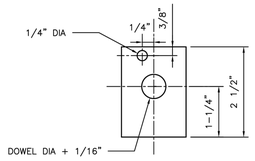

ELEVATION VIEW

JOINT PLATE

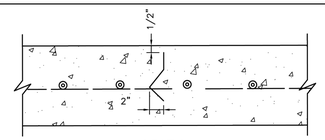

SECTION

DEFORMED METAL STRIP

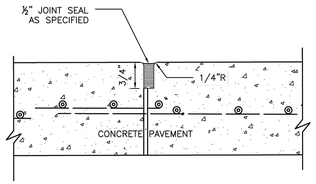

SECTION

CONSTRUCTION JOINT SEAL

TABLE 1

PAVEMENT THICKNESS (IN)	DOWEL SIZES AND SPACINGS		
	DIAMETER (IN)	LENGTH (IN)	SPACING (IN)
6	3/4	18	12
7	1	18	12
8	1	18	12
9	1 1/4	18	12
10	1 1/4	18	12
11	1 1/4	18	12
12	1 1/4	18	12

NOTES:

1. STEEL TO MEET ASTM STANDARD SPECIFICATIONS FOR CONCRETE REINFORCING BARS. UNITS TO BE SPACED 12" CENTER ON CENTER.
2. EXPANSION JOINT TO BE PLACED AT THE END OF EACH CURB RADIUS.
3. CENTER DOWEL HORIZONTALLY ON JOINT.
4. CENTER DOWEL VERTICALLY IN CONCRETE BASE. EXTEND THICKENED CONCRETE AS NEEDED TO MAINTAIN 3" MIN COVER.
5. CITY OF HOUSTON APPROVED PRODUCTS MAY BE USED AS JOINT PLATE ALTERNATIVE.

CITY OF HOUSTON
HOUSTON PUBLIC WORKS STANDARD

PAVEMENT EXPANSION AND CONSTRUCTION JOINT DETAILS

(SCALE: NOT TO SCALE)

APPROVED BY:

DocuSigned by: Suhail Nanavar — CITY ENGINEER

DocuSigned by: Carl Haddock — DIRECTOR OF HPW

DocuSigned by: KHANG NGUYEN — CITY TRAFFIC ENGINEER

EFF DATE: NOV-27-2023 | DWG NO: 02752-01

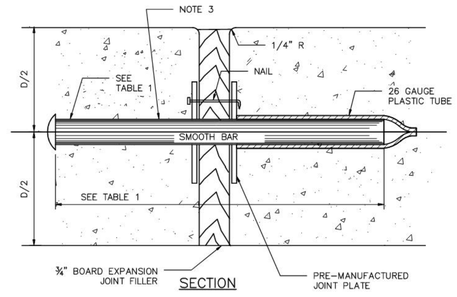

SECTION

DOWEL TYPE EXPANSION JOINT

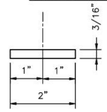

PLAN VIEW

JOINT PLATE

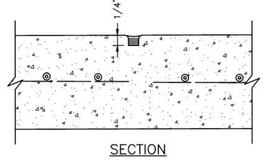

SECTION

CONTROL JOINT

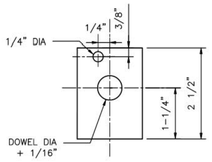

ELEVATION VIEW

JOINT PLATE

TABLE 1

PAVEMENT THICKNESS (IN)	DOWEL SIZES AND SPACINGS		
	DIAMETER (IN)	LENGTH (IN)	SPACING (IN)
4 1/2	1/2	18	12
5	1/2	18	12
6	3/4	18	12
7	1	18	12

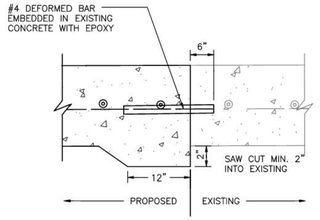

SECTION

SIDEWALK TO EXISTING SIDEWALK

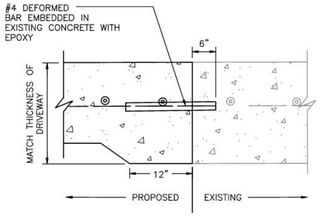

SECTION

SIDEWALK TO EXISTING DRIVEWAY

NOTES:

1. STEEL TO MEET ASTM STANDARD SPECIFICATIONS FOR CONCRETE REINFORCING BARS.
2. EXPANSION JOINT TO BE PLACED AT THE END OF EACH CURB RADIUS AND SPACED AT A MAXIMUM DISTANCE OF 3 FEET MAXIMUM SPACING FOR CONTROL JOINTS SHALL BE 5 FEET.
3. CENTER DOWEL HORIZONTALLY ON JOINT.
4. CENTER DOWEL VERTICALLY IN CONCRETE AS NEEDED TO MAINTAIN A 2 INCH MINIMUM COVER.

CITY OF HOUSTON
HOUSTON PUBLIC WORKS STANDARD

SIDEWALK EXPANSION AND CONSTRUCTION JOINT DETAILS

(SCALE: NOT TO SCALE)

APPROVED BY:

DocuSigned by: Suhail Nanavar — CITY ENGINEER

DocuSigned by: Carl Haddock — DIRECTOR OF HPW

DocuSigned by: KHANG NGUYEN — CITY TRAFFIC ENGINEER

EFF DATE: NOV-27-2023 | DWG NO: 02752-02

ARCADIS
Infrastructure · Water · Environment · Buildings
1330 Post Oak Blvd, Suite 2250
Houston, TX 77056
Tel: 713-953-4800
Fax: 713-977-4620
www.arcadis.com
Texas Registered Engineering Firm F-533

SURVEYED BY: **AMANI ENGR.**

FB NO. P-6335

STATE OF TEXAS — DAVID F. RIDGWAY — 105134 — LICENSED PROFESSIONAL ENGINEER — 11/20/2025

CITY OF HOUSTON

HOUSTON PUBLIC WORKS

LIFT STATION REHABILITATION & RECONSTRUCTION CONSENT DECREE

STREET AND SIDEWALK STANDARD DETAILS – I

D-15

WBS NUMBER	FOR CITY OF HOUSTON USE ONLY
R-000267-0175-4	
DRAWING SCALE	
AS NOTED	
CITY OF HOUSTON PM	
NP NAWARAJ PANTA, P.E.	
SHEET NO. 260 OF 312	

FILE PATH: C:\Users\omessan\DC\ACCDocs\Arcadis ACC US\AUS-30126616-Lift Station Rehab And Reconstruct CMAR\Project Files\10_WIP\10T Main PJ Folder\10T_Details\D-15_STREET & SIDEWALK-I.dwg
PLOT STYLE: COH.ctb PLOTTED: 11/20/2025 7:50 AM

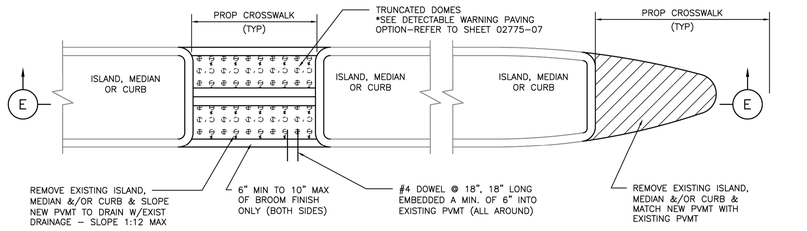

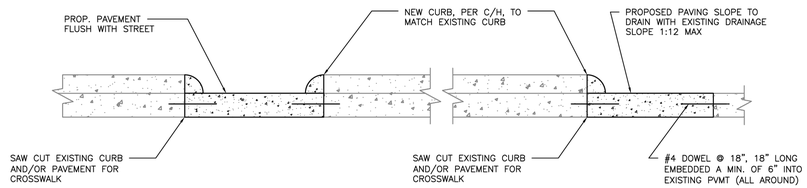

SECTION E–E
FOR ISLAND, MEDIAN, OR CURB MODIFICATIONS FOR CROSSWALKS

NOTES:

1. SEE COH STANDARD DETAIL FOR PAVEMENT MARKING DETAILS.
2. ALL RAMPS AND SIDEWALKS/WALKWAYS SHALL BE CONSTRUCTED IN ACCORDANCE WITH HOUSTON PUBLIC WORKS STANDARDS, TEXAS ACCESSIBILITY STANDARDS (TAS) AND AMERICANS WITH DISABILITIES ACT (ADA) REQUIREMENTS. IF THERE IS A CONFLICT IN THE REQUIREMENTS, THE STRICTEST REQUIREMENTS SHALL GOVERN.
3. CURB RAMPS THAT ARE STEEPER THAN A 1:12 MAX SLOPE WILL NOT BE ACCEPTED BY THE CITY OF HOUSTON.

CITY OF HOUSTON
HOUSTON PUBLIC WORKS STANDARD

CURB MODIFICATION FOR CURB RAMPS & CROSSWALKS

(SCALE: NOT TO SCALE)

APPROVED BY:

DocuSigned by: Sukal Kanwar — CITY ENGINEER
DocuSigned by: HUNG NGUYEN — CITY TRAFFIC ENGINEER
DocuSigned by: Carl Haddock — DIRECTOR OF HPW

EFF DATE: NOV–27–2023 | DWG NO: 02775–04

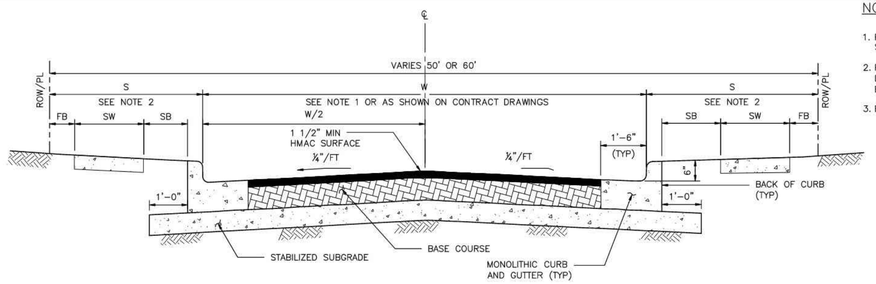

HMAC PAVEMENT – CURB & GUTTER SECTION

(NOT APPLICABLE TO ETJ OF CITY OF HOUSTON)

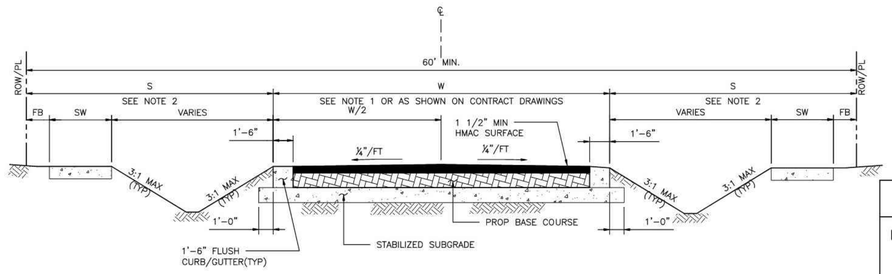

HMAC PAVEMENT – DITCH SECTION

(NOT APPLICABLE TO ETJ OF CITY OF HOUSTON)

NOTES:

1. FOR TRAVEL WAY WIDTH (W) REFER TO IDM SECTION 10.3.03.A.
2. REFER TO CONTRACT DRAWINGS FOR "S" DIMENSION (S), SIDEWALK (SW), FRONTAGE BUFFER (FB), AND SAFETY BUFFER (SB) WIDTHS.
3. BASE COURSE SHALL BE:
   ALTERNATES:
   A) 6" (MIN) HOT MIX ASPHALTIC CONCRETE.
   B) 8" (MIN) CRUSHED CONCRETE.

CITY OF HOUSTON
HOUSTON PUBLIC WORKS STANDARD

HOT MIX ASPHALTIC CONCRETE PAVEMENT DETAILS

(SCALE: NOT TO SCALE)

APPROVED BY:

DocuSigned by: Sukal Kanwar — CITY ENGINEER
DocuSigned by: HUNG NGUYEN — CITY TRAFFIC ENGINEER
DocuSigned by: Carl Haddock — DIRECTOR OF HPW

EFF DATE: NOV–27–2023 | DWG NO: 02741–01

ARCADIS
Infrastructure · Water · Environment · Buildings
1330 Post Oak Blvd, Suite 2250
Houston, TX 77056
Tel: 713–953–4800
Fax: 713–977–4620
www.arcadis.com
Texas Registered Engineering Firm F–533

SURVEYED BY: AMANI ENGR.
FB NO. P–6335

STATE OF TEXAS — DAVID F. RIDGWAY — 105134 — LICENSED PROFESSIONAL ENGINEER — 11/20/2025

CITY OF HOUSTON
HOUSTON PUBLIC WORKS

LIFT STATION REHABILITATION & RECONSTRUCTION CONSENT DECREE

STREET AND SIDEWALK STANDARD DETAILS – II

D–16

WBS NUMBER	FOR CITY OF HOUSTON USE ONLY
R–000267–0175–4	
DRAWING SCALE	
AS NOTED	
CITY OF HOUSTON PM	
NP NAWARAJ PANTA, P.E.	
SHEET NO. 261 OF 312	

FILE PATH: C:\Users\omesson\DC\ACCDocs\Arcadis ACC US\AUS–30126616–Lift Station Rehab And Reconstruct CMAR\Project Files\10_WIP\10T Main PJ Folder\10T_Details\D–16_STREET & SIDEWALK–II.dwg
PLOT STYLE: COH.ctb PLOTTED: 11/20/2025 7:51 AM

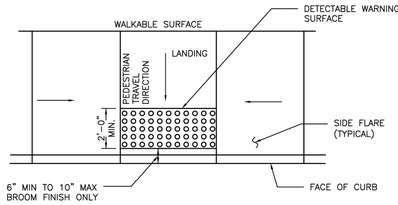

TYPICAL PLACEMENT OF DETECTABLE WARNING SURFACE ON LANDING AT STREET EDGE

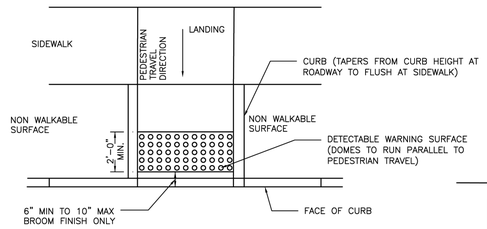

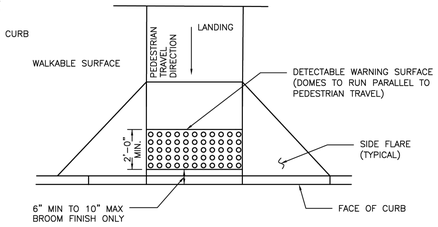

TYPICAL PLACEMENT OF DETECTABLE WARNING SURFACE ON SLOPING RAMP RUN

GENERAL NOTES FOR DETECTABLE WARNINGS:

1. DETECTABLE WARNING SURFACES MUST BE FULLY ADA COMPLIANT.
2. ALL NEW CURB RAMPS MUST CONTAIN A DETECTABLE WARNING SURFACE THAT CONSISTS OF RAISED TRUNCATED DOMES. THE SURFACE MUST CONTRAST VISUALLY WITH ADJOINING SURFACE, INCLUDING SIDE FLARES. FURNISH DARK BROWN OR DARK RED DETECTABLE WARNING SURFACE ADJACENT TO UNCOLORED CONCRETE, UNLESS SPECIFIED ELSEWHERE IN THE PLANS.
3. DETECTABLE WARNING SURFACES MUST MAINTAIN A SLIP RESISTANCE WITH FA–VALUE OF EQUAL TO OR GREATER THAN 0.8.
4. DETECTABLE WARNING SURFACES MUST MAINTAIN A WATER ABSORPTION RATE OF LESS THAN 1%, DETECTABLE WARNING SHALL NOT ALLOW WATER TO ACCUMULATE.
5. DETECTABLE WARNINGS INSTALLED INTO FRESH CONCRETE SHALL BE WITHOUT VOIDS AND UTILIZING AN ACCEPTABLE ANCHORING SYSTEM.
6. ALIGN TRUNCATED DOMES IN THE DIRECTION OF PEDESTRIAN TRAVEL WHEN ENTERING THE STREET.
7. DETECTABLE WARNING SURFACES SHALL BE A MINIMUM OF 24" IN DEPTH IN THE DIRECTION OF PEDESTRIAN TRAVEL, AND EXTEND THE FULL WIDTH OF THE CURB RAMP OR LANDING WHERE THE PEDESTRIAN ACCESS ROUTE ENTERS THE STREET.
8. DETECTABLE WARNING SURFACES SHALL BE LOCATED SO THAT THE EDGE NEAREST THE CURB LINE IS 6" MIN TO 10" MAX FROM THE DETECTABLE WARNING SURFACES MAY BE CURVED ALONG THE CORNER RADIUS.
9. ALL RAMPS AND SIDEWALKS/WALKWAYS SHALL BE CONSTRUCTED IN ACCORDANCE WITH HOUSTON PUBLIC WORKS STANDARDS, TEXAS ACCESSIBILITY STANDARDS (TAS) AND AMERICANS WITH DISABILITIES ACT (ADA) REQUIREMENTS. IF THERE IS A CONFLICT IN THE REQUIREMENTS, THE STRICTEST REQUIREMENTS SHALL GOVERN.
10. CURB RAMPS THAT ARE STEEPER THAN A 1:12 MAX SLOPE WILL NOT BE ACCEPTED BY THE CITY OF HOUSTON.

CITY OF HOUSTON
HOUSTON PUBLIC WORKS STANDARD

DETECTABLE WARNING CURB RAMP DETAILS

(SCALE: NOT TO SCALE)

APPROVED BY:

DocuSigned by: Suhail Kanwar — CITY ENGINEER
DocuSigned by: KHANG NGUYEN — CITY TRAFFIC ENGINEER
DocuSigned by: Carl Haddock — DIRECTOR OF HPW

EFF DATE: NOV–27–2023 | DWG NO: 02775–06

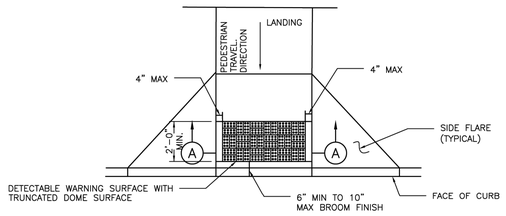

PLAN VIEW

DETECTABLE WARNING SURFACE

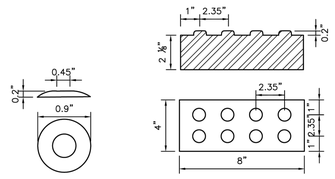

DETAIL

DETECTABLE WARNING PAVER

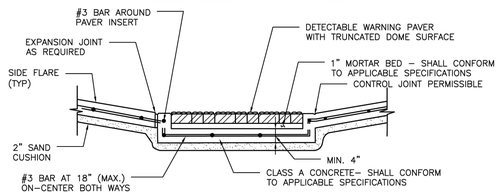

SECTION A–A

PAVER

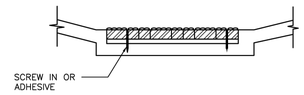

DETAIL A–5

NOTES:

GENERAL NOTES

1. ALL RAMPS AND SIDEWALKS/WALKWAYS SHALL BE CONSTRUCTED IN ACCORDANCE WITH HOUSTON PUBLIC WORKS STANDARDS, TEXAS ACCESSIBILITY STANDARDS (TAS) AND AMERICANS WITH DISABILITIES ACT (ADA) REQUIREMENTS. IF THERE IS A CONFLICT IN THE REQUIREMENTS, THE STRICTEST REQUIREMENTS SHALL GOVERN.
2. CURB RAMPS THAT ARE STEEPER THAN A 1:12 MAX SLOPE WILL NOT BE ACCEPTED BY THE CITY OF HOUSTON.

PAVERS

1. FURNISH DETECTABLE WARNING SURFACE UNITS MEETING ALL REQUIREMENTS OF ASTM C–936, C–33. LAY IN A TWO BY TWO UNIT BASKET WEAVE PATTERN OR AS DIRECTED.
2. LAY FULL–SIZE UNITS FIRST FOLLOWED BY CLOSURE UNITS CONSISTING OF AT LEAST 25 PERCENT OF A FULL UNIT. CUT DETECTABLE WARNING POWER UNITS USING A POWER SAW.

POLYMER CONCRETE

1. DETECTABLE WARNING TILES SHALL BE MADE OF POLYMER CONCRETE MATERIALS.
2. DETECTABLE WARNING TILES SHALL BE INSTALLED INTO FRESH CONCRETE (CAST–IN–PLACE) UTILIZING AN ANCHORING SYSTEM.
3. DETECTABLE WARNING TILES SHALL BE OF TERRACOTTA (BRICK–RED) COLOR AND COLORED THROUGHOUT TO GUARANTEE THE ADA REQUIRED COLOR CONTRAST.
4. DETECTABLE WARNING TILES SHALL MEET OR EXCEED THE FOLLOWING ASTM–BASED "STANDARDS" FOR CONCRETE MATERIALS.
   A. COMPRESSION STRENGTH > 12,500 PSI PER ASTM C 39–04
   B. WATER ABSORPTION < 0.25% PER ASTM C 97–09

PADS

1. FURNISH REQUIREMENTS OF ADAAG (MARCH 2003).
2. OTHER MATERIALS MAY BE USED IF APPROVED BY THE CITY ENGINEER

CITY OF HOUSTON
HOUSTON PUBLIC WORKS STANDARD

DETECTABLE WARNING SURFACE (OPTIONS)

(SCALE: NOT TO SCALE)

APPROVED BY:

DocuSigned by: Suhail Kanwar — CITY ENGINEER
DocuSigned by: KHANG NGUYEN — CITY TRAFFIC ENGINEER
DocuSigned by: Carl Haddock — DIRECTOR OF HPW

EFF DATE: NOV–27–2023 | DWG NO: 02775–07

ARCADIS
Infrastructure · Water · Environment · Buildings
1330 Post Oak Blvd, Suite 2250
Houston, TX 77056
Tel: 713–953–4800
Fax: 713–977–4620
www.arcadis.com
Texas Registered Engineering Firm F–533

SURVEYED BY: AMANI ENGR.
FB NO. P–6335

STATE OF TEXAS — DAVID F. RIDGWAY — 105134 — LICENSED PROFESSIONAL ENGINEER — 11/20/2025

CITY OF HOUSTON
HOUSTON PUBLIC WORKS

LIFT STATION REHABILITATION & RECONSTRUCTION CONSENT DECREE

STREET AND SIDEWALK STANDARD DETAILS – III

D–17

WBS NUMBER	FOR CITY OF HOUSTON USE ONLY
R–000267–0175–4	
DRAWING SCALE	
AS NOTED	
CITY OF HOUSTON PM	
NP NAWARAJ PANTA, P.E.	
SHEET NO. 262 OF 312	

FILE PATH: C:\Users\omessan\DC\ACCDocs\Arcadis ACC US\AUS–30126616–Lift Station Rehab And Reconstruct CMAR\Project Files\10_WIP\10T Main PJ Folder\10T_Details\D–17_STREET & SIDEWALK–III.dwg
PLOT STYLE: COH.ctb PLOTTED: 11/20/2025 7:51 AM

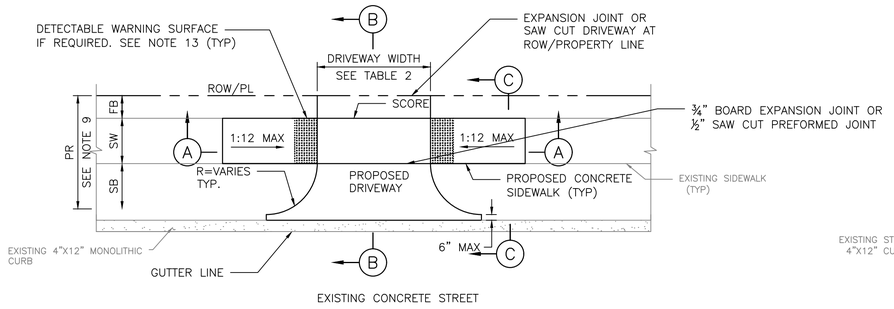

PLAN VIEW
DRIVEWAY

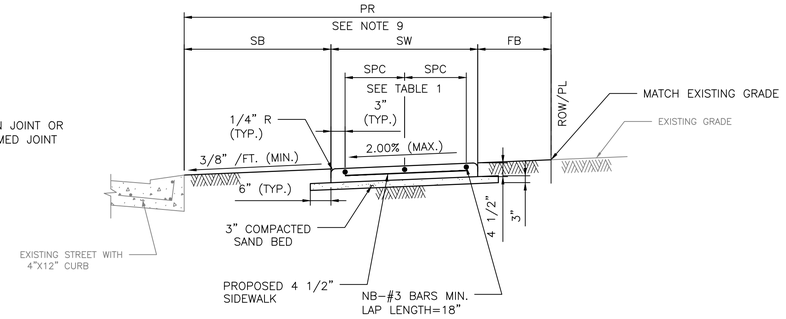

SECTION C–C
TYPICAL SIDEWALK SECTION

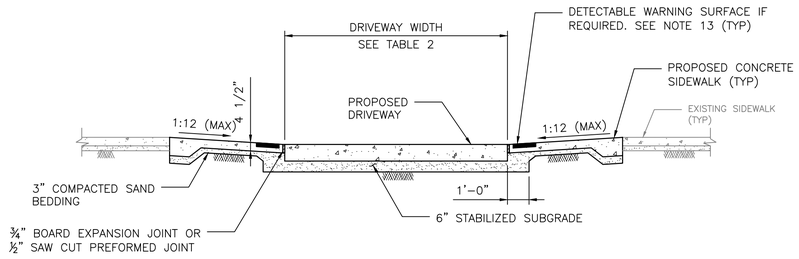

SECTION A–A
PROPOSED SIDEWALK, THROUGH DRIVEWAY WITH EXCESSIVE GRADES

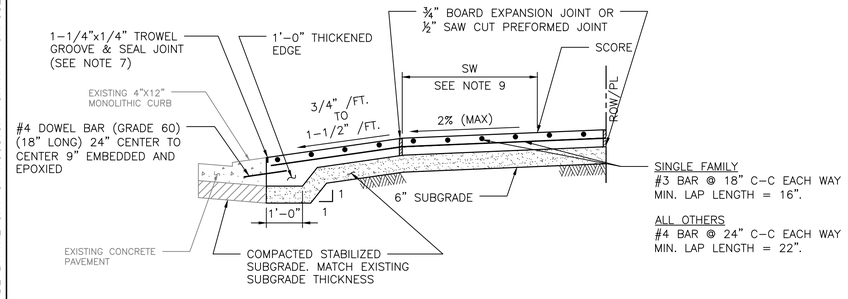

SINGLE FAMILY
#3 BAR @ 18" C–C EACH WAY MIN. LAP LENGTH = 16".

ALL OTHERS
#4 BAR @ 24" C–C EACH WAY MIN. LAP LENGTH = 22".

SECTION B–B
TYPICAL DRIVEWAY SECTION

TABLE 1

REINFORCING STEEL INFORMATION
FOR 4 ½ " THICK SIDEWALKS
EXPANSION JOINT SPACING = 40 FT
fc' = 3,500 PSI AND fy = 60,000 PSI
REFER TO CONTRACT DRAWINGS FOR SIDEWALKS WIDER THAN 6 FEET.

SIDEWALK THICKNESS (IN)	SIDEWALK WIDTH (FT)	LONGITUDINAL STEEL			TRANSVERSE STEEL #3 BARS SPACING (IN)
		#3 BARS			
		NO. OF BARS "NB"	SPACING "SPC" (IN)	END BAR SPACING (IN)	
4.5	5	3	27	3	48
4.5	6	4	22	3	48

TABLE 2

DRIVEWAY DESIGN CRITERIA (1)(2)

TRAFFIC TYPE	TYPE A DRIVEWAY (FOR SINGLE FAMILY RESIDENTIAL HOUSES OR DUPLEXES)				TYPE B DRIVEWAY (SHARED ACCESS/SHARED DRIVEWAY)				TYPE C DRIVEWAY (COMMERCIAL DRIVEWAY)			
	WIDTH (FT)		RADIUS (FT)		WIDTH (FT)		RADIUS (FT)		WIDTH (FT)		RADIUS (FT)	
	MIN	MAX	MIN	MAX	MIN	MAX	MIN	MAX	MIN	MAX	MIN	MAX
ONE–WAY	10	12	4	10	12(5)	16(5)	4(5)	10(5)	15	20	10	20
TWO–WAY	10(3)	24(4)	4	10	16(6)	24	4	10	24	35	10	20

(1) REFER TO INFRASTRUCTURE DESIGN MANUAL ARTICLE 15.2.07.C.1.F FOR DRIVEWAYS THAT REQUIRE A VEHICLE SWEPT PATH ANALYSIS.
(2) REFER TO INFRASTRUCTURE DESIGN MANUAL ARTCILES 15.2.07.C.1.G.(1) AND 15.2.07.C.1.G.(2) FOR TYPE 1 PAE AND TYPE 2 PAE REQUIREMENTS.
(3) THE MINIMUM WIDTH FOR JOINT ACCESS DRIVEWAY IS 12 FT.
(4) REFER TO CHAPTER 42 OF THE CODE OF ORDINANCES FOR DRIVEWAY WIDTHS FOR NARROW LOTS.
(5) ONLY MURS AND COURTYARD STYLE DEVELOPMENTS ON CORNER LOTS CAN HAVE ONE–WAY DRIVEWAYS.
(6) REFER TO CHAPTER 42, SECTION 42–146 OF THE CODE OF ORDINANCES FOR EXCEPTIONS TO THE MINIMUM DRIVEWAY WIDTH FOR SHARED DRIVEWAYS.

NOTES:

1. REPAIR, RECONSTRUCTION OR REPLACEMENT OF SIDEWALKS SHALL MEET PERMITTING REQUIREMENTS OF CODE OF ORDINANCES SECTION 40–552.
2. FOR REPAIR, RECONSTRUCTION, OR REPLACEMENT OF EXISTING SIDEWALKS:
   - 2.1. EXISTING SIDEWALKS LESS THAN OR EQUAL TO 20 FEET IN TOTAL LENGTH:
     - 2.1.1. THE PROPOSED SIDEWALK WIDTH WILL BE ALLOWED TO MATCH THE EXISTING SIDEWALK.
   - 2.2. EXISTING SIDEWALKS GREATER THAN 20 FEET IN TOTAL LENGTH:
     - 2.2.1. THE SIDEWALK WIDTH FOR THE ENTIRE PROPERTY WIDTH SHALL BE IMPROVED TO MEET WIDTH REQUIREMENTS ACCORDING TO THE LATEST INFRASTRUCTURE DESIGN MANUAL.
   - 2.3. 20 FOOT TOTAL LENGTH IS DEFINED AS:
     - 2.3.1. UP TO 10 FEET ON BOTH SIDES OF THE DRIVEWAY; OR
     - 2.3.2. UP TO 20 FEET WHEN SIDEWALK AFFECTED IS LOCATED ONLY ON ONE SIDE OF THE DRIVEWAY.
3. IF AVAILABLE ROW IS NOT SUFFICIENT TO ACCOMMODATE SIDEWALK WIDTH (SW) ACCORDING TO IDM REQUIREMENTS, ENGINEER SHALL OBTAIN A VARIANCE FROM THE CITY ENGINEER.
4. DRIVEWAYS SHALL BE 6" THICK FOR SINGLE FAMILY OR DUPLEXES.
5. DRIVEWAYS AND SIDEWALKS SHALL BE CONSTRUCTED WITH PORTLAND CEMENT CONCRETE AND INCLUDE 5 1/2 SACKS OF CEMENT PER CUBIC YARD OF CONCRETE.
6. THE OUTER DOWEL BARS ARE TO BE LOCATED 12" FROM END OF PROPOSED EDGE OF DRIVEWAY RETURN. EXTEND DOWEL 3" INCHES INTO PROPOSED DRIVEWAY AND BEND REMAINING BAR TO EXTEND TO RADIUS RETURN BOTH SIDES.
7. TROWEL GROOVE SEALANT SHALL BE LOW MODULUS SILICONE OR POLYURETHANE SEALANT.
8. ALL JOINTS ALONG THE SIDEWALK SHALL BE CONSTRUCTED ACCORDING TO DRAWING 02752–02 AND SPECIFICATION 02752.
9. REFER TO CONTRACT DRAWINGS FOR PEDESTRIAN REALM (PR), SIDEWALK (SW), FRONTAGE BUFFER (FB), AND SAFETY BUFFER (SB) WIDTHS.
10. CEMENT STABILIZED SAND 1.5 SACKS OF CEMENT PER TON OF DRY SAND.
11. ALL RAMPS AND SIDEWALKS/WALKWAYS SHALL BE CONSTRUCTED IN ACCORDANCE WITH HOUSTON PUBLIC WORKS STANDARDS, TEXAS ACCESSIBILITY STANDARDS (TAS) AND AMERICANS WITH DISABILITIES ACT (ADA) REQUIREMENTS. IF THERE IS A CONFLICT IN THE REQUIREMENTS, THE STRICTEST REQUIREMENTS SHALL GOVERN.
12. CURB RAMPS THAT ARE STEEPER THAN A 1:12 MAX SLOPE WILL NOT BE ACCEPTED BY THE CITY OF HOUSTON.
13. DETECTABLE WARNING SURFACES:
    - 13.1. SIDEWALK SHALL HAVE A DETECTABLE WARNING SURFACE WHERE:
      - 13.1.1. SIDEWALK INTERSECTS TYPE C DRIVEWAYS (COMMERCIAL DRIVEWAYS) THAT ARE STOP, YIELD OR TRAFFIC SIGNAL CONTROLLED; OR
      - 13.1.2. SIDEWALK SLOPE IS GREATER THAN 1:20 AND INTERSECTS A TYPE C DRIVEWAY (COMMERCIAL DRIVEWAY)
    - 13.2. DETECTABLE WARNING SURFACES ARE OPTIONAL WHERE SIDEWALKS INTERSECT TYPE A DRIVEWAYS (SINGLE FAMILY RESIDENTIAL HOUSES OR DUPLEXES) OR TYPE B DRIVEWAYS (SHARED ACCESS/SHARED DRIVEWAYS).
    - 13.3. REFER TO STANDARD DETAILS 02775–06 TO 02775–07 FOR DETECTABLE WARNING SURFACE STANDARDS.

DISCLAIMER:
THE USE OF THIS STANDARD IS GOVERNED BY THE TEXAS ENGINEERING PRACTICE ACT. THE DESIGN REQUIREMENTS ON THIS STANDARD DO NOT PURPORT TO ADDRESS ALL OF THE SAFETY CONCERNS ASSOCIATED WITH THEIR USE. THE ENGINEER OF RECORD (EOR) IS TO REVIEW THESE DESIGN REQUIREMENTS AND BY AUTHORIZING THEIR USE, ACCEPTS RESPONSIBILITY FOR THEIR APPLICABILITY, ADEQUACY AND SAFETY. NO WARRANTY OF ANY KIND IS MADE BY THE CITY OF HOUSTON FOR ANY PURPOSES WHATSOEVER. THE CITY OF HOUSTON ASSUMES NO RESPONSIBILITY FOR INCORRECT RESULTS OR DAMAGES RESULTING FROM ITS USE.

EFF DATE: NOV–27–2023

DWG NO: 02754–01A

ARCADIS
Infrastructure · Water · Environment · Buildings
1330 Post Oak Blvd, Suite 2250
Houston, TX 77056
Tel: 713–953–4800
Fax: 713–977–4620
www.arcadis.com
Texas Registered Engineering Firm F–533

SURVEYED BY: AMANI ENGR.
FB NO. P–6335

STATE OF TEXAS
DAVID F. RIDGWAY
105134
LICENSED
PROFESSIONAL ENGINEER
11/21/2023

CITY OF HOUSTON
HOUSTON PUBLIC WORKS STANDARD

LIFT STATION REHABILITATION & RECONSTRUCTION CONSENT DECREE

DRIVEWAY DETAIL WITH 4"x12" CURB FOR LOCAL RESIDENTIAL STREETS
D–18

WBS NUMBER	FOR CITY OF HOUSTON USE ONLY
R–000267–0175–4	
DRAWING SCALE	
NOT TO SCALE	
CITY OF HOUSTON PM	
NAWARAJ PANTA, P.E.	
SHEET NO. 263 OF 312	

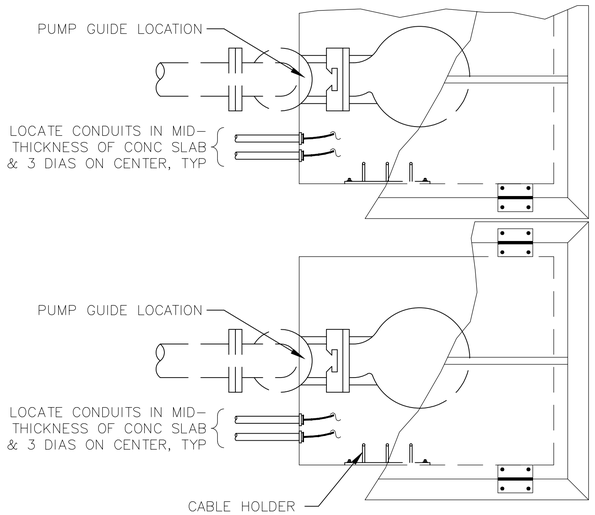

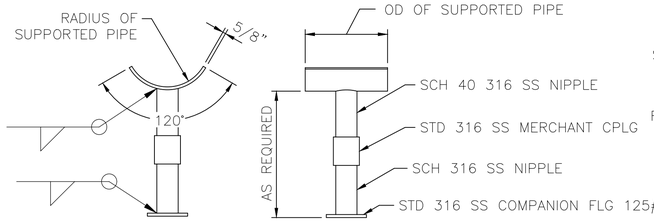

TYP ADJUSTABLE PIPE SUPPORT
(SEE NOTE 1)

DETAIL 2

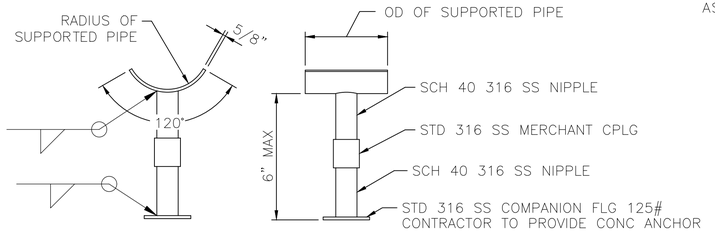

TYP ADJUSTABLE PIPE SUPPORT

SEE TYP CONC PIPE SUPPORT PIER DETAIL, SHT D-23
(SEE NOTE 1)

DETAIL 2A

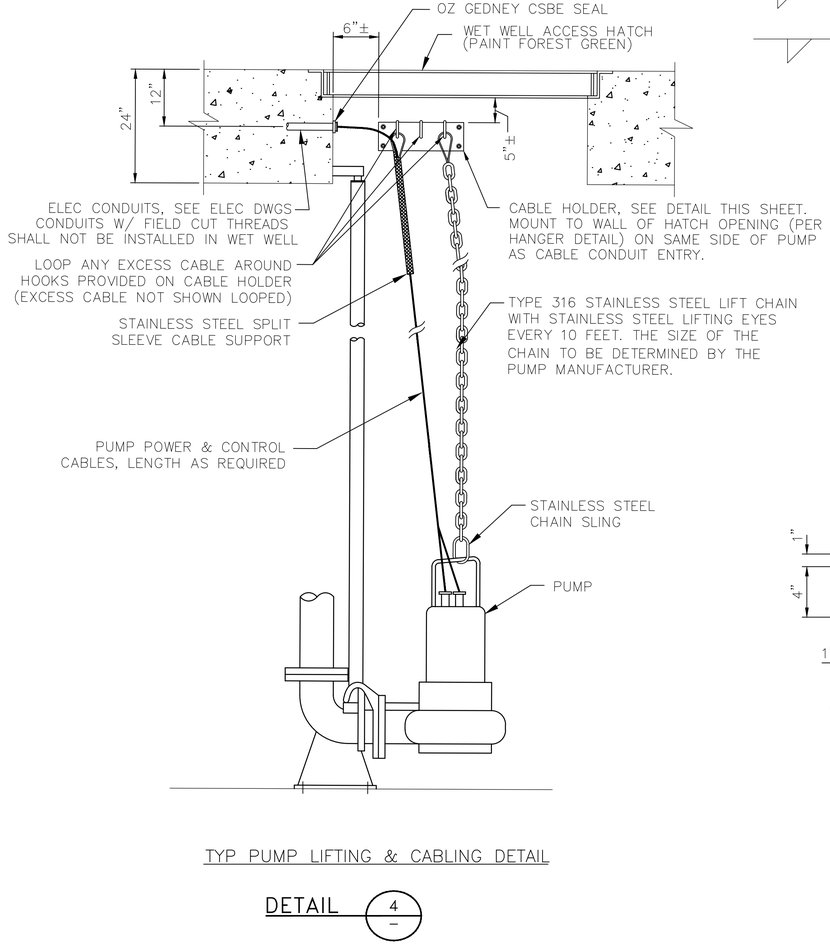

TYP PUMP LIFTING & CABLING DETAIL

DETAIL 4

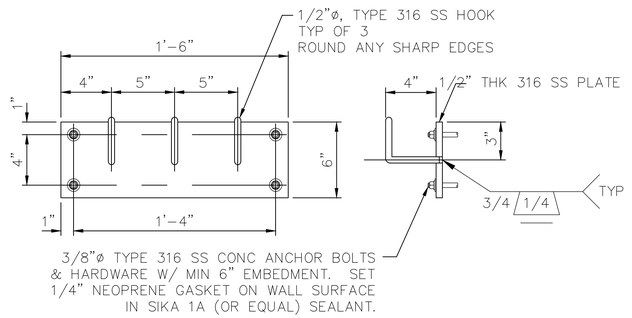

TYPICAL CABLE HOLDER ASSY

DETAIL 5

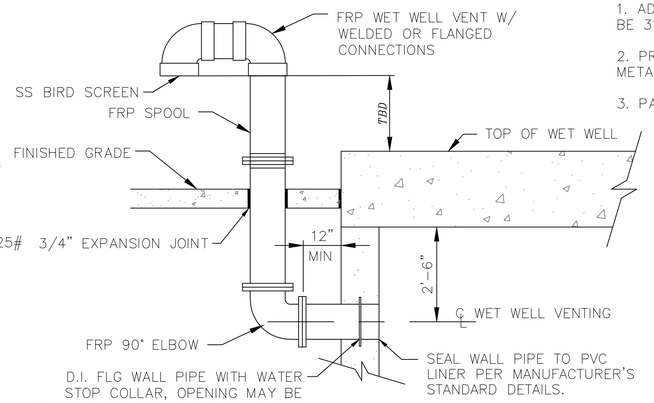

TYPICAL HIGH PROFILE
WET WELL VENTING INSTALLATION

DETAIL 1

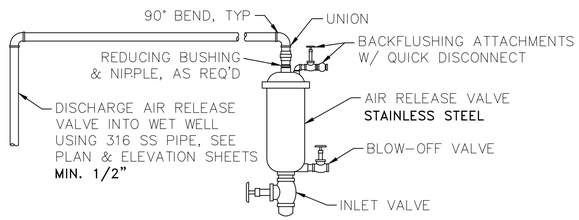

TYPICAL AIR RELEASE VALVE ASSY

DETAIL 3

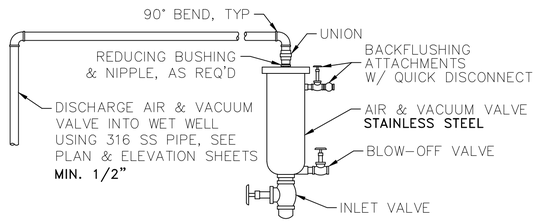

TYPICAL AIR & VACUUM VALVE ASSY

DETAIL 6

NOTES:

1. ADJUSTABLE PIPE SUPPORT ASSEMBLY TO BE 316 SS.
2. PROVIDE MEANS OF PREVENTING DISSIMILAR METAL CONTACT.
3. PAINT EXPOSED FRP VENT PIPE

NO.	DATE	REVISION	APP.

ARCADIS
Infrastructure · Water · Environment · Buildings
1330 Post Oak Blvd, Suite 2250
Houston, TX 77056
Tel: 713-953-4800
Fax: 713-977-4620
www.arcadis.com
Texas Registered Engineering Firm F-533
SURVEYED BY: AMANI ENGR.
FB NO. P-6335

STATE OF TEXAS
DAVID F. RIDGWAY
105134
LICENSED
PROFESSIONAL ENGINEER
01/26/2026

CITY OF HOUSTON
HOUSTON PUBLIC WORKS

LIFT STATION REHABILITATION & RECONSTRUCTION CONSENT DECREE

MECHANICAL STANDARD DETAILS – I
D-19

WBS NUMBER	FOR CITY OF HOUSTON USE ONLY
R-000267-0175-4	
DRAWING SCALE	
AS NOTED	
CITY OF HOUSTON PM	
NP NAWARAJ PANTA, P.E.	
SHEET NO. 264 OF 312	

FILE PATH: C:\Users\omesson\DC\ACCDocs\Arcadis ACC US\AUS-30126616-Lift Station Rehab And Reconstruct CMAR\Project Files\10_WIP\10T Main PJ Folder\10T_Details\D-19_MECHANICAL DTLS-I.dwg
PLOT STYLE: COH.ctb PLOTTED: 2/12/2026 10:05 AM

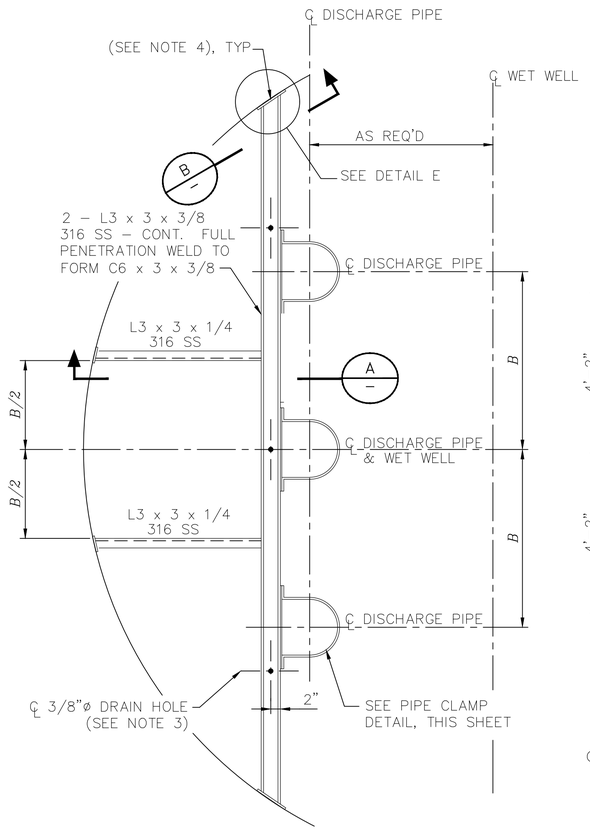

TYP DISCHARGE PIPING SUPPORT
PLAN FOR 3 PUMPS DETAIL 1

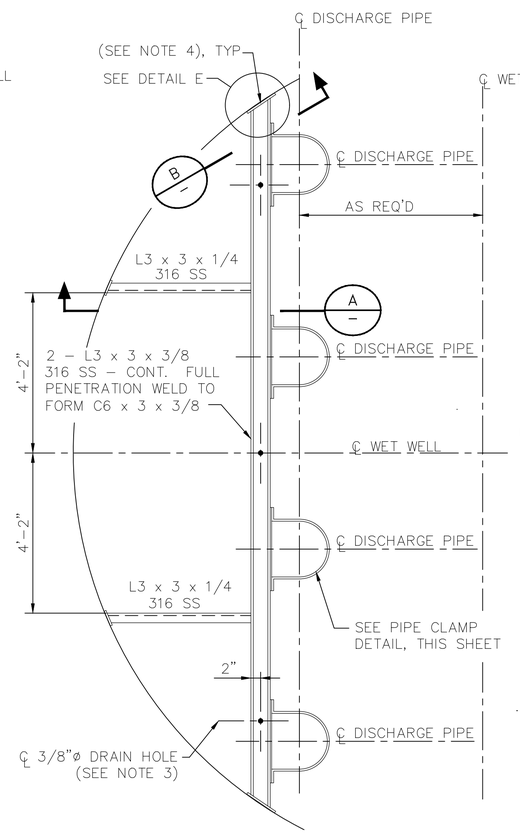

TYP DISCHARGE PIPING SUPPORT
PLAN FOR 4 PUMPS DETAIL 2

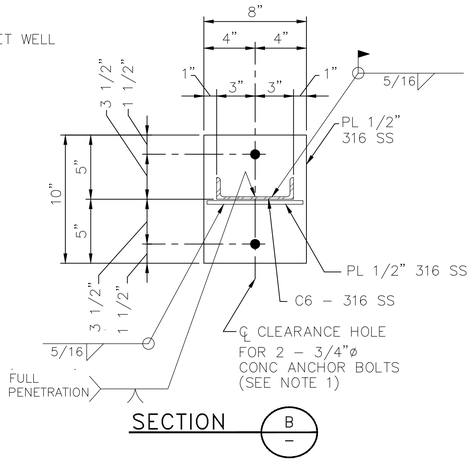

SECTION B

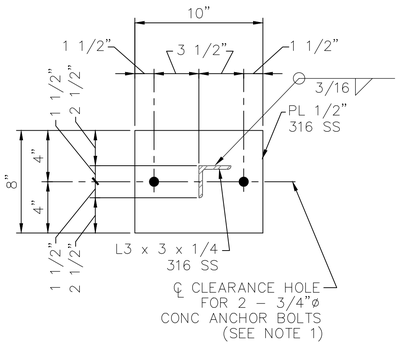

SECTION C

NOTES:

1. CONCRETE ANCHOR BOLTS SHALL HAVE 6" MINIMUM EMBEDMENT AND SHALL BE TYPE 316 STAINLESS STEEL, PER SPECIFICATIONS.
2. SEE STATION AND STRUCTURAL DRAWINGS FOR DIMENSIONS AND INFORMATION NOT SHOWN.
3. DRILL 3/8"ø HOLES, 1" OFF ℄ OF C6 AT MIDSPAN BETWEEN LATERAL PIPE SUPPORTS TO ALLOW FOR DRAINAGE. 3 HOLES PER CHANNEL WHERE 2 LATERAL SUPPORTS REQUIRED; 2 HOLES PER CHANNEL WHERE 1 LATERAL SUPPORT REQUIRED.
4. SET 1/4" NEOPRENE GASKET ON WALL SURFACE IN SIKA 1A (OR EQUAL) SEALANT.

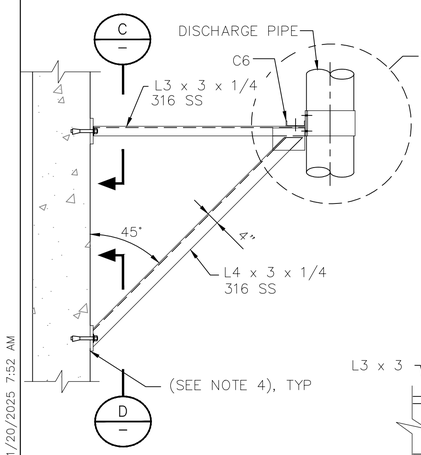

TYP LATERAL PIPE SUPPORT FRAME
SECTION A

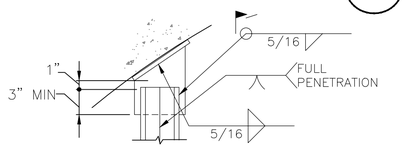

DETAIL E

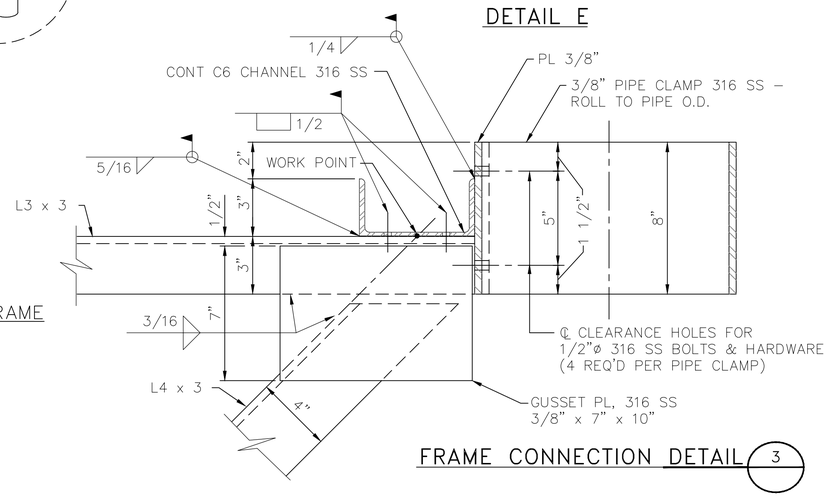

FRAME CONNECTION DETAIL 3

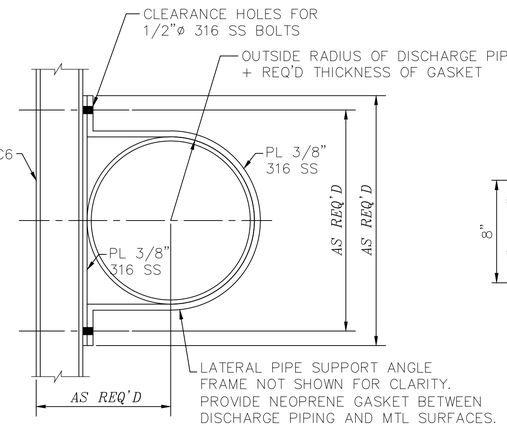

PIPE CLAMP DETAIL 4

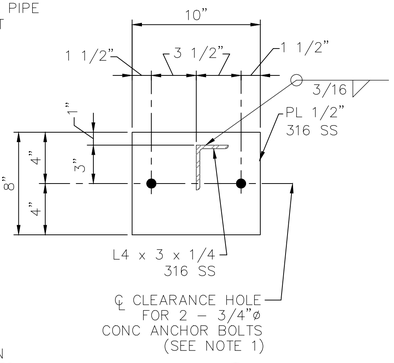

SECTION D

ARCADIS
Infrastructure · Water · Environment · Buildings
1330 Post Oak Blvd, Suite 2250
Houston, TX 77056
Tel: 713-953-4800
Fax: 713-977-4620
www.arcadis.com
Texas Registered Engineering Firm F-533

SURVEYED BY: AMANI ENGR.
FB NO. P-6335

STATE OF TEXAS
DAVID F. RIDGWAY
105134
LICENSED
PROFESSIONAL ENGINEER
11/20/2025

CITY OF HOUSTON
HOUSTON PUBLIC WORKS

LIFT STATION REHABILITATION & RECONSTRUCTION
CONSENT DECREE

MECHANICAL
STANDARD DETAILS – II
D–20

WBS NUMBER	FOR CITY OF HOUSTON USE ONLY
R-000267-0175-4	
DRAWING SCALE	
AS NOTED	
CITY OF HOUSTON PM	
NP NAWARAJ PANTA, P.E.	
SHEET NO. 265 OF 312	

FILE PATH: C:\Users\vonessan\DC\ACCDocs\Arcadis ACC US\AUS-30126616-Lift Station Rehab And Reconstruct CMAR\Project Files\10_WIP\10T Main PJ Folder\10T_Details\D-20_MECHANICAL DTLS-II.dwg
PLOT STYLE: COH.ctb PLOTTED: 11/20/2025 7:52 AM

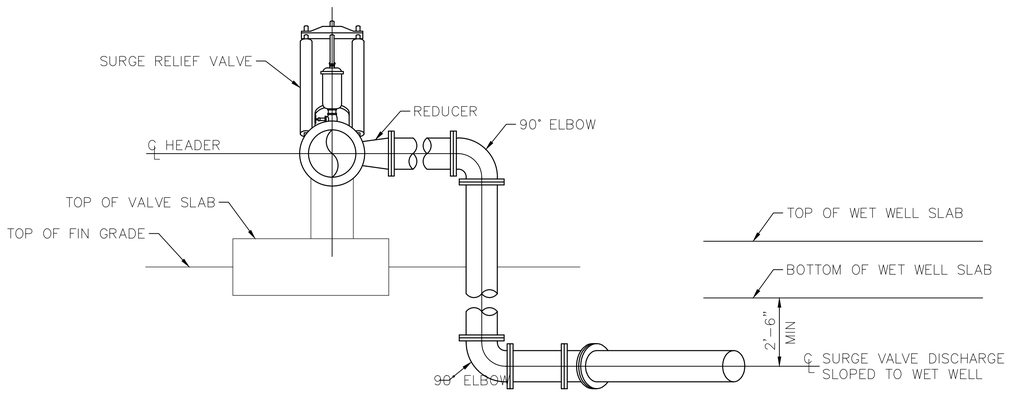

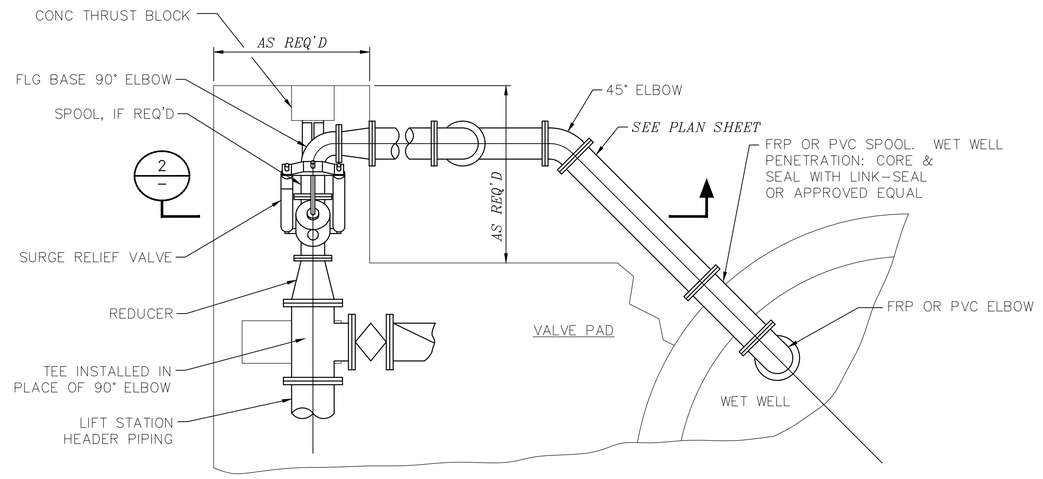

SECTION 1 — TYP SURGE RELIEF VALVE FOR STATIONS WITHOUT VALVE VAULT

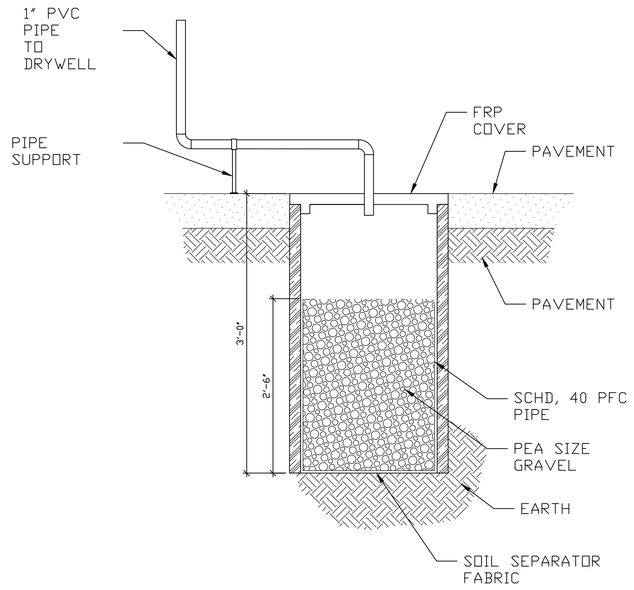

2 — CONDENSATE DRY WELL DETAIL

SCALE: NOT TO SCALE

ARCADIS
Infrastructure · Water · Environment · Buildings
1330 Post Oak Blvd, Suite 2250
Houston, TX 77056
Tel: 713-953-4800
Fax: 713-977-4620
www.arcadis.com
Texas Registered Engineering Firm F-533

SURVEYED BY: AMANI ENGR.
FB NO. P-6335

STATE OF TEXAS — DAVID F. RIDGWAY — 105134 — LICENSED PROFESSIONAL ENGINEER — 11/20/2025

CITY OF HOUSTON
HOUSTON PUBLIC WORKS

LIFT STATION REHABILITATION & RECONSTRUCTION CONSENT DECREE

MECHANICAL STANDARD DETAILS – III
D-21

WBS NUMBER	FOR CITY OF HOUSTON USE ONLY
R-000267-0175-4	
DRAWING SCALE	
AS NOTED	
CITY OF HOUSTON PM	
NP NAWARAJ PANTA, P.E.	
SHEET NO. 266 OF 312	

FILE PATH: C:\Users\omessan\DC\ACCDocs\Arcadis ACC US\AUS-30126616-Lift Station Rehab And Reconstruct CMAR\Project Files\10_WIP\10T Main PJ Folder\10T_Details\D-21_MECHANICAL DTLS-III.dwg
PLOT STYLE: COH.ctb PLOTTED: 11/20/2025 9:18 AM

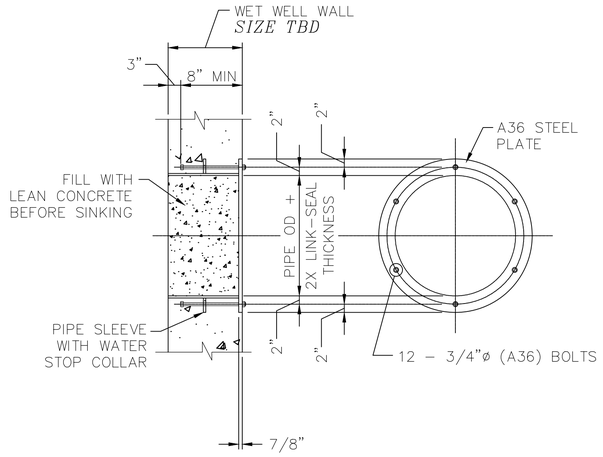

TYPICAL PIPE BLOCK-OUT DETAIL
FOR CAISSON CONSTRUCTION

DETAIL 1

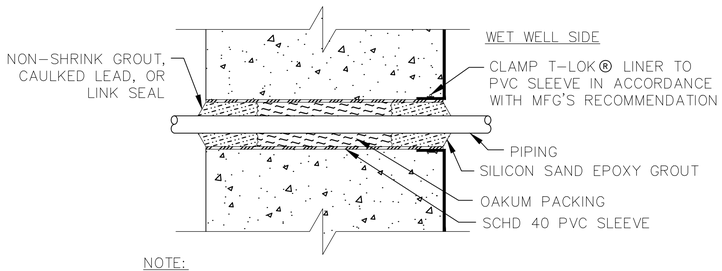

NOTE:
SLEEVED WET WELL PENETRATION IS NOT TO BE USED FOR CONDUIT INSTALLATION. SEE ELECTRICAL DETAIL SHEETS FOR CONDUIT PENETRATIONS.

SLEEVED WET WELL PENETRATION
FOR PIPING 4"ø & SMALLER

DETAIL 4

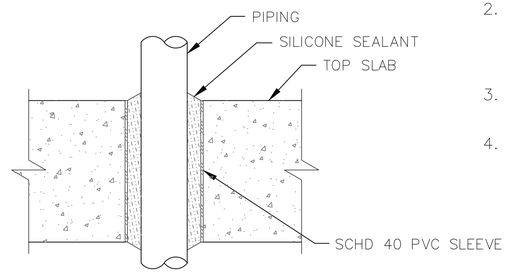

NOTE:
SLEEVED SLAB PENETRATION IS NOT TO BE USED FOR WET WELL PENETRATIONS.

SLEEVED SLAB PENETRATION

DETAIL 5

NOTES:

1. ADJUSTABLE PIPE SUPPORT ASSEMBLY TO BE HOT DIPPED GALVANIZED AFTER FABRICATION. COLD GALVANIZING COMPOUND TO BE USED AS TOUCH UP AFTER INSTALLATION.
2. AT CONTRACTOR'S OPTION, THE ADJUSTABLE PIPE SUPPORT MAY BE AN EQUAL PURCHASED PRODUCT AS MANUFACTURED BY MATERIAL RESOURCES, GRINNEL, OR OTHER MANUFACTURER.
3. PROVIDE WARNING SIGN WHEN HOSE BIBB IS USED FOR POTABLE WATER.
4. 12" GRAVITY VENTILATOR FIBERGLASS MUSHROOM VENT WITH SS BIRD SCREEN PAINTED INDUSTRIAL GREY.

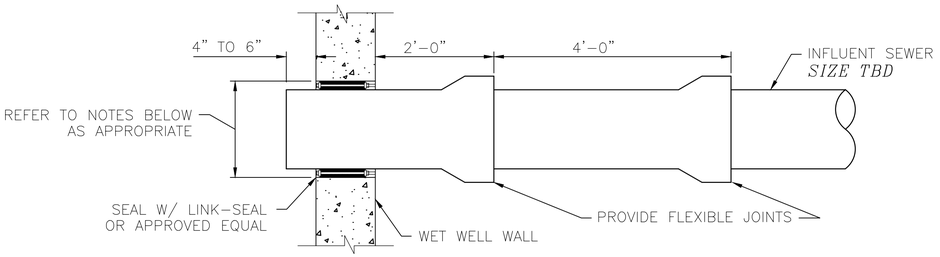

FOR OPENINGS TO BE CORED (CAISSON CONSTRUCTION):

1. IDENTIFY PIPE PENETRATION LOCATION WITH 1" DIA PLASTIC PIPE SLEEVE.
2. DIAMETER OF PENETRATION OPENING SHALL BE EQUAL TO PIPE OUTER DIAMETER PLUS 2 TIME LINK-SEAL THICKNESS.
3. PROVIDE ADDITIONAL REINFORCEMENT AROUND PENETRATION OPENING AS PER DRAWINGS S5 BEFORE CASTING WALL.

FOR OPENINGS TO BE SLEEVED OR FORMED (CAISSON CONSTRUCTION):

1. IDENTIFY PIPE PENETRATION LOCATION.
2. DIAMETER OF PENETRATION OPENING SHALL BE EQUAL TO PIPE OUTER DIAMETER PLUS 2 TIMES LINK-SEAL THICKNESS. SEE "TYPICAL PIPE BLOCK-OUT DETAIL FOR CAISSON CONSTRUCTION," THIS SHEET.
3. PROVIDE ADDITIONAL REINFORCEMENT AROUND PENETRATION OPENING AS PER DRAWING S5 BEFORE CASTING WALL.

FOR OPENINGS TO BE FORMED OR SLEEVED (OPEN CUT CONSTRUCTION):

1. IDENTIFY PIPE PENETRATION LOCATION.
2. DIAMETER OF PENETRATION OPENING SHALL BE EQUAL TO PIPE OUTER DIAMETER PLUS 2 TIMES LINK-SEAL THICKNESS.
3. PROVIDE ADDITIONAL REINFORCEMENT AROUND PENETRATION OPENING AS PER DRAWING Z0S01 BEFORE CASTING WALL.

TYP INFLUENT SEWER ENTRY DETAIL

DETAIL 2

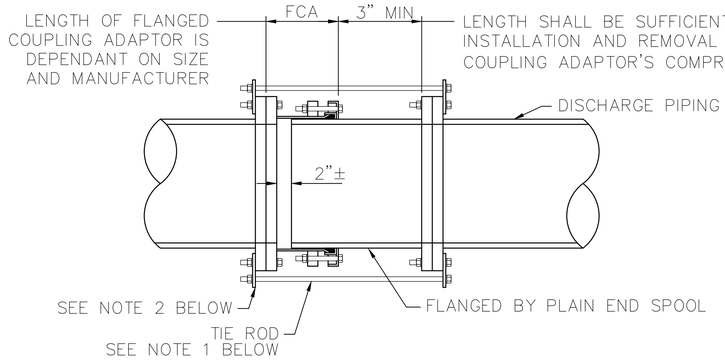

NOTES:

1. PROVIDE A NUMBER OF TIE RODS EQUAL TO 1/2 THE NUMBER OF FLANGE BOLTS. EVENLY SPACE INSTALLATION OF TIE RODS. DIAMETER OF TIE RODS TO BE EQUAL TO THE DIAMETER OF FLANGE BOLTS. LENGTH OF TIE RODS TO BE DETERMINED BY CONTRACTOR BASED ON SIZE AND MANUFACTURER OF FLANGED COUPLING ADAPTOR AND FINAL LENGTH OF SPOOL PIECE.
2. PROVIDE 316 SS TAB FOR ATTACHMENT OF TIE RODS. SIZE TO BE DETERMINED BY CONTRACTOR.
3. CONTRACTOR TO SUBMIT DETAILS DURING SHOP DRAWING SUBMISSION.
4. ALL HARDWARE SHALL BE 316 STAINLESS STEEL. TIE RODS SHOULD BE THREADED.
5. THIS RESTRAINT DOES NOT REPLACE THRUST BLOCKS TO BE PROVIDED AT OTHER LOCATIONS.

TYP FLANGED COUPLING ADAPTOR
RESTRAINT DETAIL

DETAIL 3

ARCADIS
Infrastructure - Water - Environment - Buildings
1330 Post Oak Blvd, Suite 2250
Houston, TX 77056
Tel: 713-953-4800
Fax: 713-977-4620
www.arcadis.com
Texas Registered Engineering Firm F-533

SURVEYED BY: AMANI ENGR.
FB NO. P-6335

STATE OF TEXAS
DAVID F. RIDGWAY
105134
LICENSED PROFESSIONAL ENGINEER
11/20/2025

CITY OF HOUSTON
HOUSTON PUBLIC WORKS

LIFT STATION REHABILITATION & RECONSTRUCTION CONSENT DECREE

MECHANICAL STANDARD DETAILS - IV
D-22

WBS NUMBER	FOR CITY OF HOUSTON USE ONLY
R-000267-0175-4	
DRAWING SCALE	
AS NOTED	
CITY OF HOUSTON PM	
NP NAWARAJ PANTA, P.E.	
SHEET NO. 267 OF 312	

FILE PATH: C:\Users\omessan\DC\ACCDocs\Arcadis ACC US\AUS-30126616-Lift Station Rehab And Reconstruct CMAR\Project Files\10_WIP\10T Main PJ Folder\10T_Details\D-22_MECHANICAL DTLS-IV.dwg
PLOT STYLE: COH.ctb PLOTTED: 11/20/2025 7:52 AM

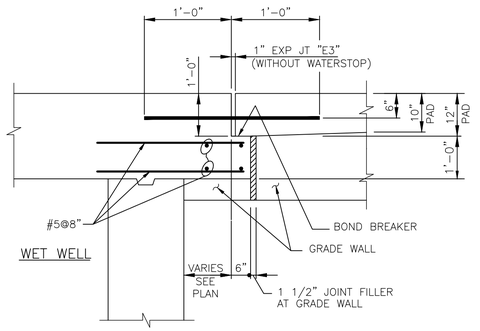

1 TYPICAL EXPANSION JOINT
SCALE:NTS

(BETWEEN WET WELL AND VALVE PAD)

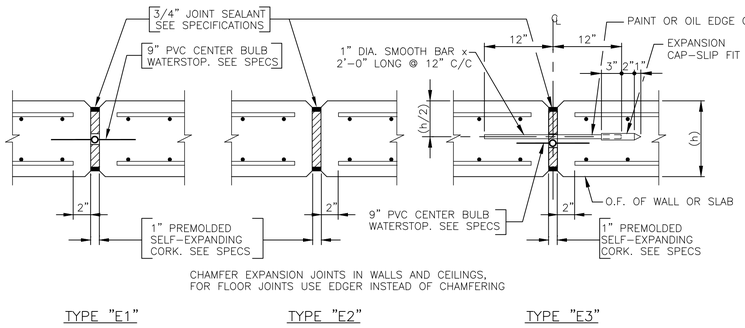

2 EXPANSION JOINTS
SCALE:NTS

LD=TENSILE DEVELOPMENT LENGTH FOR REINF BARS WITH FY = 60 KSI	
BAR SIZE	TENSION DEVELOPMENT LENGTH 'LD' INCHES
3	12
4	12
5	15
6	19
7	26
8	35
9	44
10	56
11	68

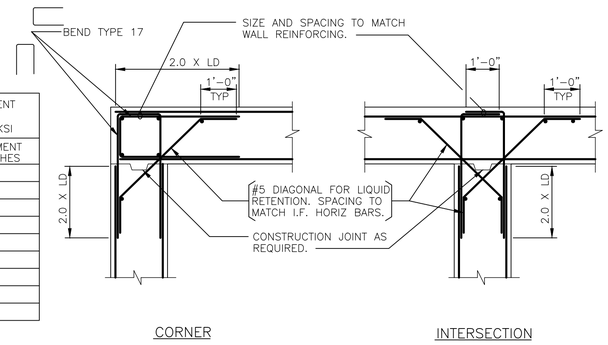

3 TYPICAL DETAILS OF WALL REINFORCEMENT
SCALE:NTS

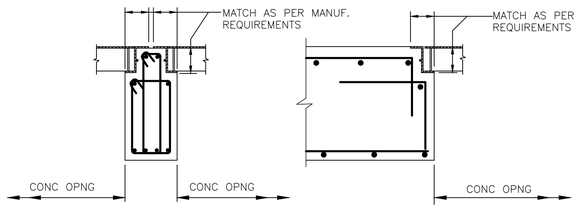

5 TYPICAL HATCH FRAME SECTIONS
SCALE:NTS

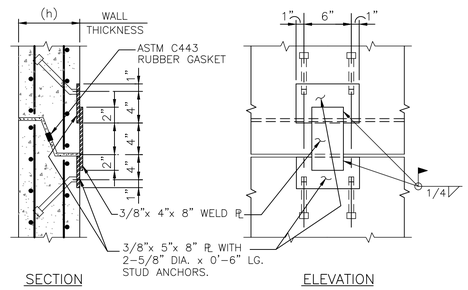

NOTE: CONNECTION CAPACITY T = 14 KIPS
PROVIDE MIN. 6 CONNECTIONS PER JOINT.

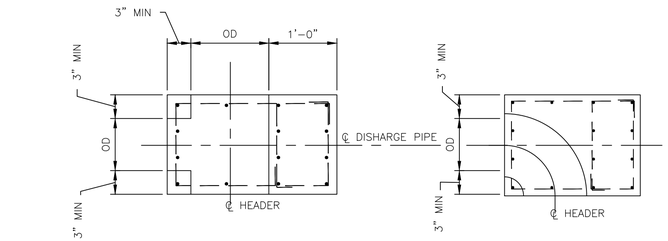

PLAN – THRUST BLOCK @ TEE

PLAN – THRUST BLOCK @ ELBOW

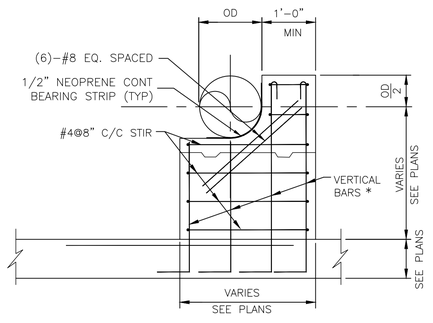

ELEVATION

*VERTICAL BARS

PIPE DIA	NO. OF VERT BARS
4" – 8"	3 – 4#8 + 1 – 2#8
10" – 12"	3 – 4#8 + 1 – 2#8
14" – 16"	3 – 4#8 + 1 – 2#8
18" – 20"	3 – 4#8 + 1 – 2#8

4 TYPICAL THRUST BLOCK DETAILS
SCALE:NTS

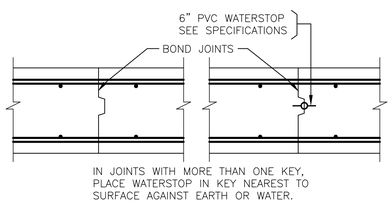

REINFORCING STEEL IS CONTINUOUS THROUGH CONSTRUCTION JOINT.

TYPE C1 TYPE C2

7 CONSTRUCTION JOINT
SCALE:NTS

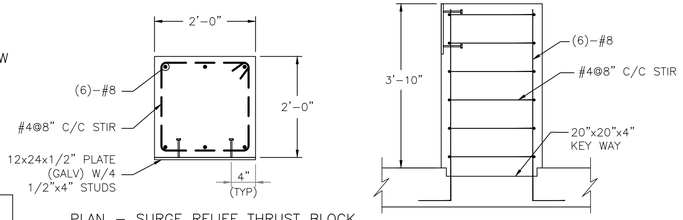

PLAN – SURGE RELIEF THRUST BLOCK

10 SURGE RELIEF THRUST BLOCK DETAILS
SCALE:NTS

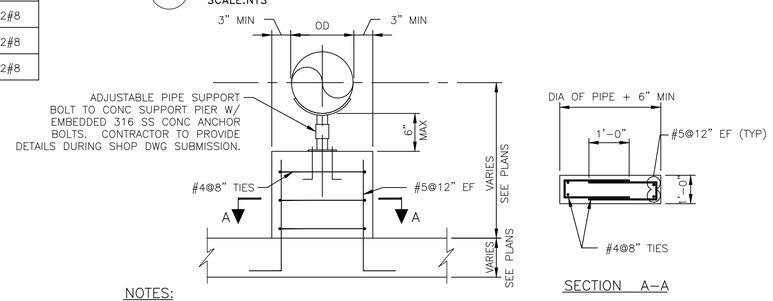

NOTES:

1. CONCRETE SUPPORT PIER IS NOT A THRUST BLOCK AND IS NOT INTENDED TO REPLACE THRUST BLOCK PROVIDED AT OTHER LOCATIONS.
2. PLACE SUPPORT PIER APPROX 9" TO 24" FROM CHECK VALVE, SEE CIVIL DRAWINGS. DO NOT PLACE SUPPORT PIER ON TOP OF EXPANSION JOINT.
3. DESIGN ENGINEER TO PROVIDE CONCRETE PIPE SUPPORT PIER FOR ALL VALVES 14" AND LARGER. REVISE AS NECESSARY; DELETE WHEN NOT REQUIRED.

8 TYPICAL CONC PIPE SUPPORT PIER DETAIL
SCALE:NTS

PRECAST UNITS CONNECTION DETAILS CAISSON CONSTRUCTION METHOD
6
SCALE:NTS

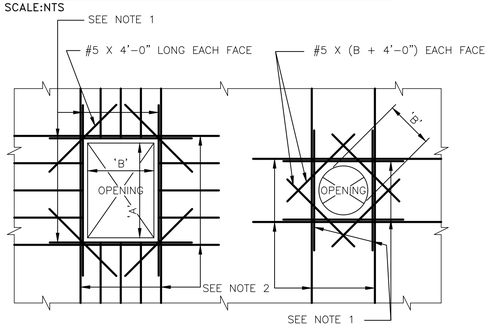

NOTES:

1. PROVIDE 2–#6 X (B+4'–0") ADDITIONAL REBARS @ TOP AND BOTTOM AND 2–#6 X (A+4'–0") ADDITIONAL REBARS AT EACH SIDE OF OPENING IN WALLS ONLY.
2. PROVIDE ADDL BARS EQUAL TO ONE–HALF OF BARS INTERRUPTED AT EACH SIDE OF OPENING AT 3" C/C. THESE BARS SHALL BE ORIGINAL SIZES AND LENGTHS AS THOSE OF THE INTERRUPTED BARS. (TYPICAL FOR OPENINGS IN SLABS AND PRESSURE WALLS.)

9 ADDITIONAL REINFORCING STEEL AT OPENINGS IN WALLS AND SLABS
SCALE:NTS

NO.	DATE	REVISION	APP.

ARCADIS
Infrastructure · Water · Environment · Buildings
1330 Post Oak Blvd, Suite 2250
Houston, TX 77056
Tel: 713-953-4800
Fax: 713-977-4620
www.arcadis.com
Texas Registered Engineering Firm F-533

SURVEYED BY: AMANI ENGR.
FB NO. P-6335

STATE OF TEXAS
TANVIR HOSSAIN
121767
LICENSED PROFESSIONAL ENGINEER

CITY OF HOUSTON
HOUSTON PUBLIC WORKS

LIFT STATION REHABILITATION & RECONSTRUCTION CONSENT DECREE

STRUCTURAL DETAILS

D–23

WBS NUMBER	FOR CITY OF HOUSTON USE ONLY
R-000267-0175-4	
DRAWING SCALE	
AS NOTED	
CITY OF HOUSTON PM	
NP NAWARAJ PANTA, P.E.	
SHEET NO. 268 OF 312	

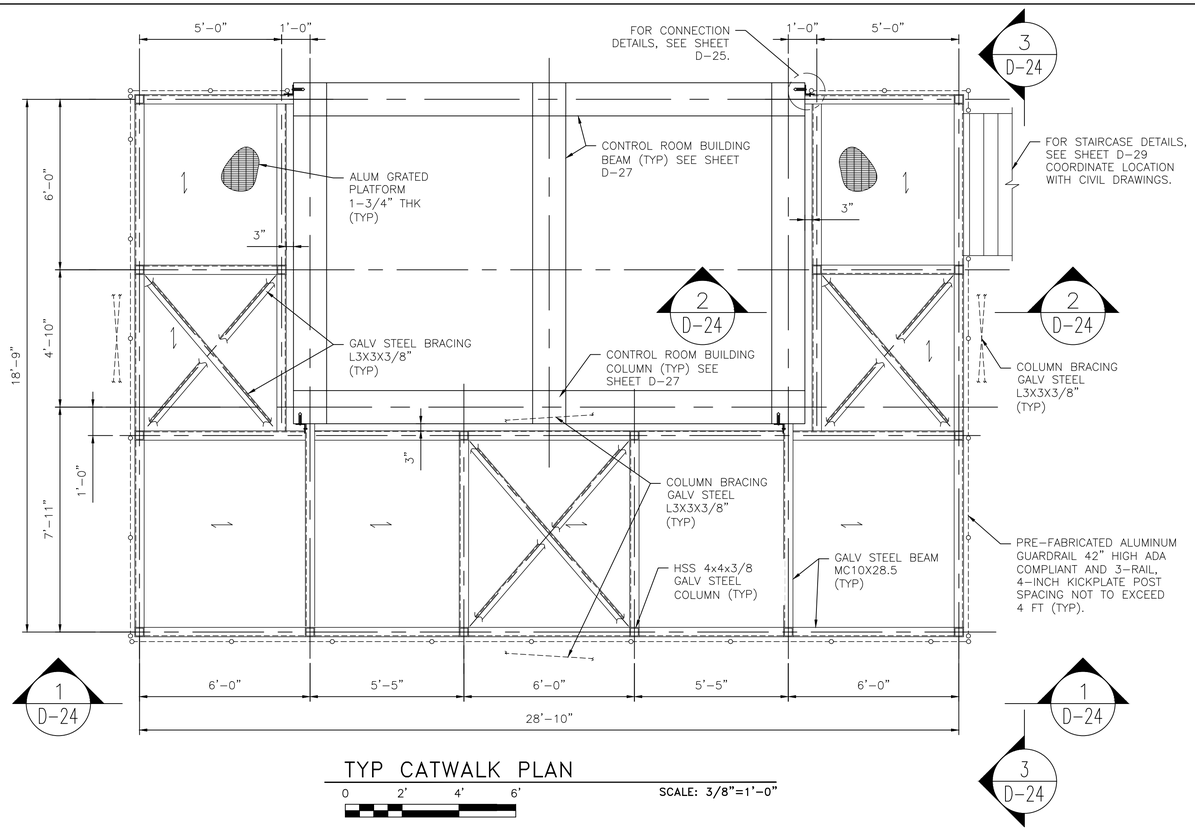

TYP CATWALK PLAN

0 2' 4' 6'

SCALE: 3/8"=1'-0"

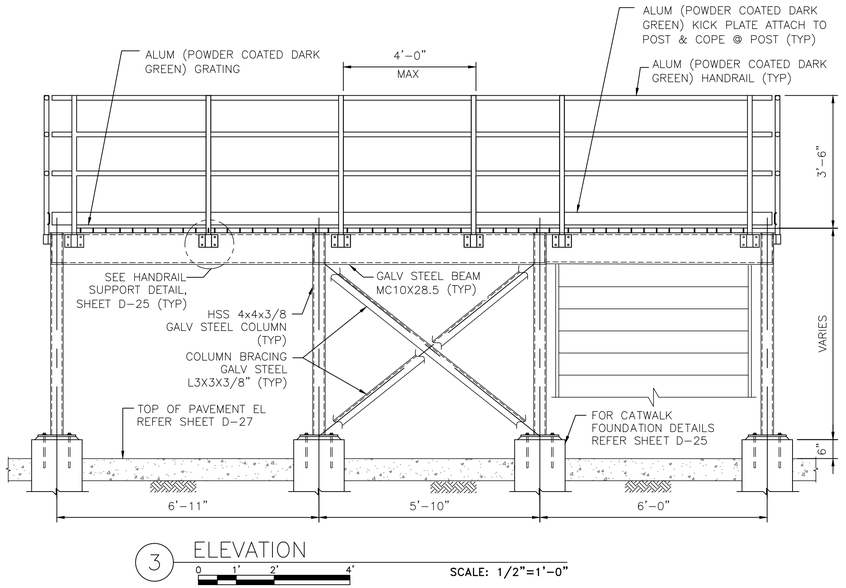

3 ELEVATION

0 1' 2' 4'

SCALE: 1/2"=1'-0"

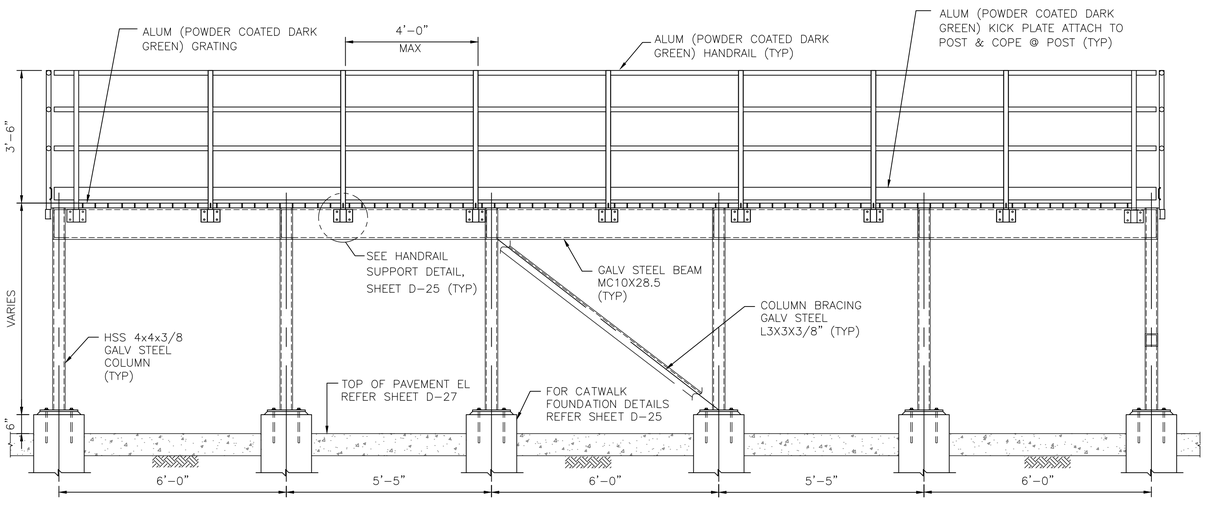

1 ELEVATION

0 1' 2' 4'

SCALE: 1/2"=1'-0"

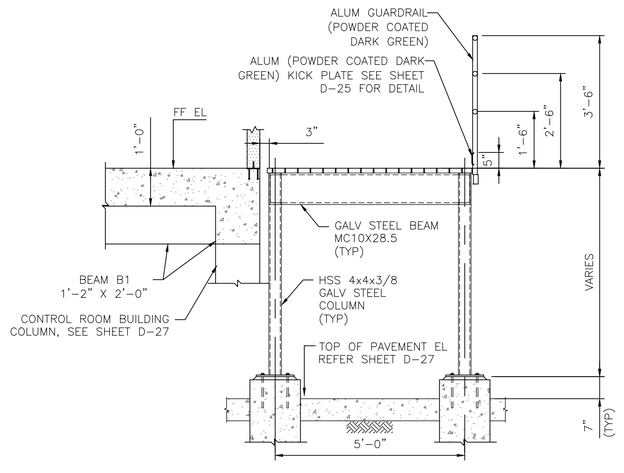

2 SECTION

0 1' 2' 4'

SCALE: 1/2"=1'-0"

NO.	DATE	REVISION	APP.

NOTES:

1. THIS DESIGN IS BASED ON THE PROVIDED BUILDING DIMENSIONS. FINAL BUILDING DIMENSIONS TO BE COORIDNATED WITH MANUFACTURER DRAWINGS.
2. DESIGN SUPERIMPOSED LOADS AS NOTED:
   CATWALK LOADS:
   LIVE LOAD (L) = 150 PSF
3. WIND LOADS:
   BASIC WIND SPEED (3-SEC GUST) (V): 150 MPH
   WIND EXPOSURE CATEGORY: C
4. DESIGN NET ALLOWABLE BEARING PRESSURE: 2000 PSF.
5. CONTRACTOR TO PROVIDE DETAIL DRAWINGS INCLUDING CONNECTION DETAILS DURING SHOP DRAWING SUBMISSION.

ARCADIS
Infrastructure · Water · Environment · Buildings
1330 Post Oak Blvd, Suite 2250
Houston, TX 77056
Tel: 713-953-4800
Fax: 713-977-4620
www.arcadis.com
Texas Registered Engineering Firm F-533

SURVEYED BY: AMANI ENGR.

FB NO. P-6335

STATE OF TEXAS
TANVIR HOSSAIN
121767
LICENSED PROFESSIONAL ENGINEER

CITY OF HOUSTON

HOUSTON PUBLIC WORKS

LIFT STATION REHABILITATION & RECONSTRUCTION CONSENT DECREE

STANDARD CATWALK DETAILS - I

D-24

WBS NUMBER	FOR CITY OF HOUSTON USE ONLY
R-000267-0175-4	
DRAWING SCALE	
AS NOTED	
CITY OF HOUSTON PM	
NP NAWARAJ PANTA, P.E.	
SHEET NO. 269 OF 312	

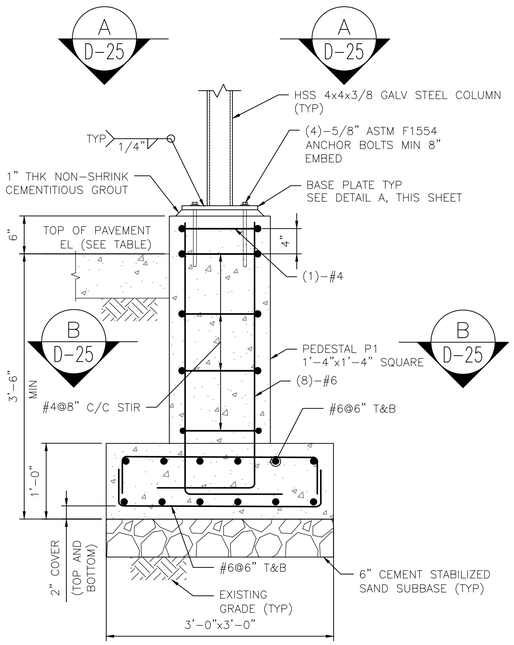

CATWALK FOUNDATION SECTION

SCALE: 1"=1'-0"

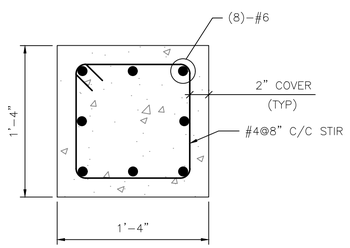

B SECTION

SCALE: 1 1/2"=1'-0"

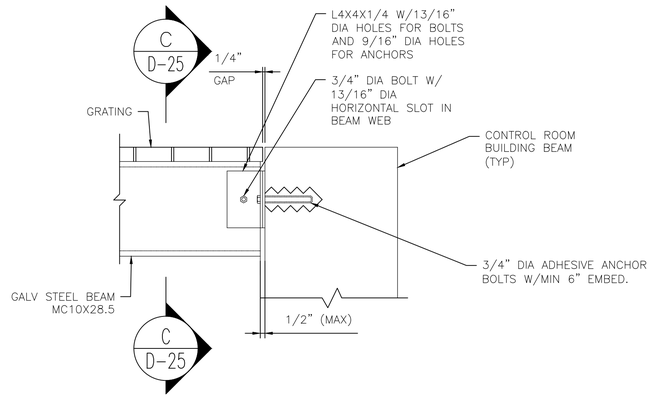

TYP FRAMING TO CONCRETE CONNECTION DETAIL

SCALE: 1 1/2"=1'-0"

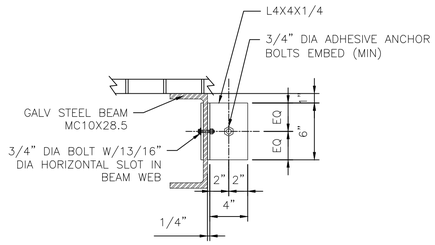

C SECTION

SCALE: 1 1/2"=1'-0"

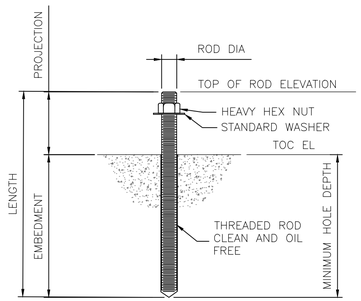

ADHESIVE ANCHOR DETAIL

SCALE: 1/4"=1'-0"

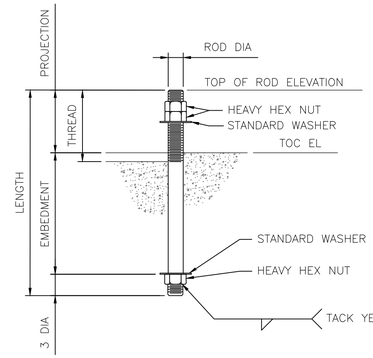

ANCHOR ROD DETAIL

SCALE: 1/4"=1'-0"

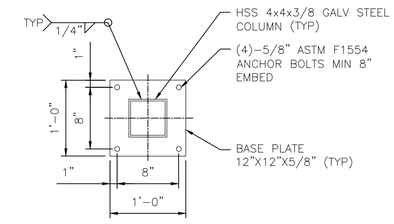

A BASE PLATE DETAIL

SCALE: 3/4"=1'-0"

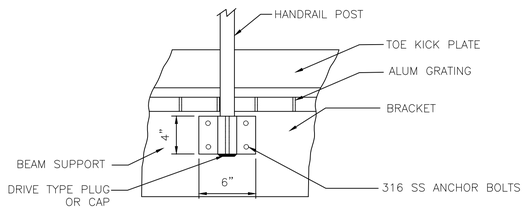

TYP HANDRAIL SUPPORT DETAIL

SCALE: 1 1/2"=1'-0"

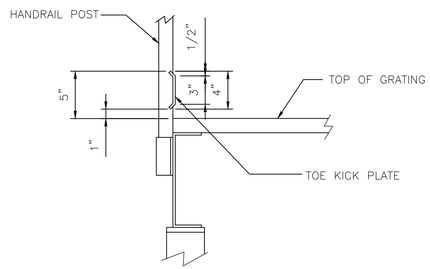

TYP TOE KICK PLATE DETAIL

SCALE: 1 1/2"=1'-0"

NOTE:

1. CONTRACTOR TO CONFIRM ANCHOR ROD PROJECTIONS.

NOTE: FOR TOP OF PAVEMENT EL AND FLOOR FINISH EL SEE BELOW TABLE

LOCATION	TOP OF PAVEMENT EL (ft)	FLOOR FINISH EL (ft)
BRETSHIRE	47.9	53.94
ANNUNCIATION	61.1	66.05
RED GULLY	46.9	49.9
CHERRY OAKS	74.7	79.24

NO.	DATE	REVISION	APP.

ARCADIS
Infrastructure · Water · Environment · Buildings
1330 Post Oak Blvd, Suite 2250
Houston, TX 77056
Tel: 713-953-4800
Fax: 713-977-4620
www.arcadis.com
Texas Registered Engineering Firm F-533

SURVEYED BY: AMANI ENGR.
FB NO. P-6335

STATE OF TEXAS
TANVIR HOSSAIN
121767
LICENSED PROFESSIONAL ENGINEER

CITY OF HOUSTON

HOUSTON PUBLIC WORKS

LIFT STATION REHABILITATION & RECONSTRUCTION CONSENT DECREE

STANDARD CATWALK DETAILS – II

D-25

WBS NUMBER	FOR CITY OF HOUSTON USE ONLY
R-000267-0175-4	
DRAWING SCALE	
AS NOTED	
CITY OF HOUSTON PM	
NP NAWARAJ PANTA, P.E.	
SHEET NO. 270 OF 312	

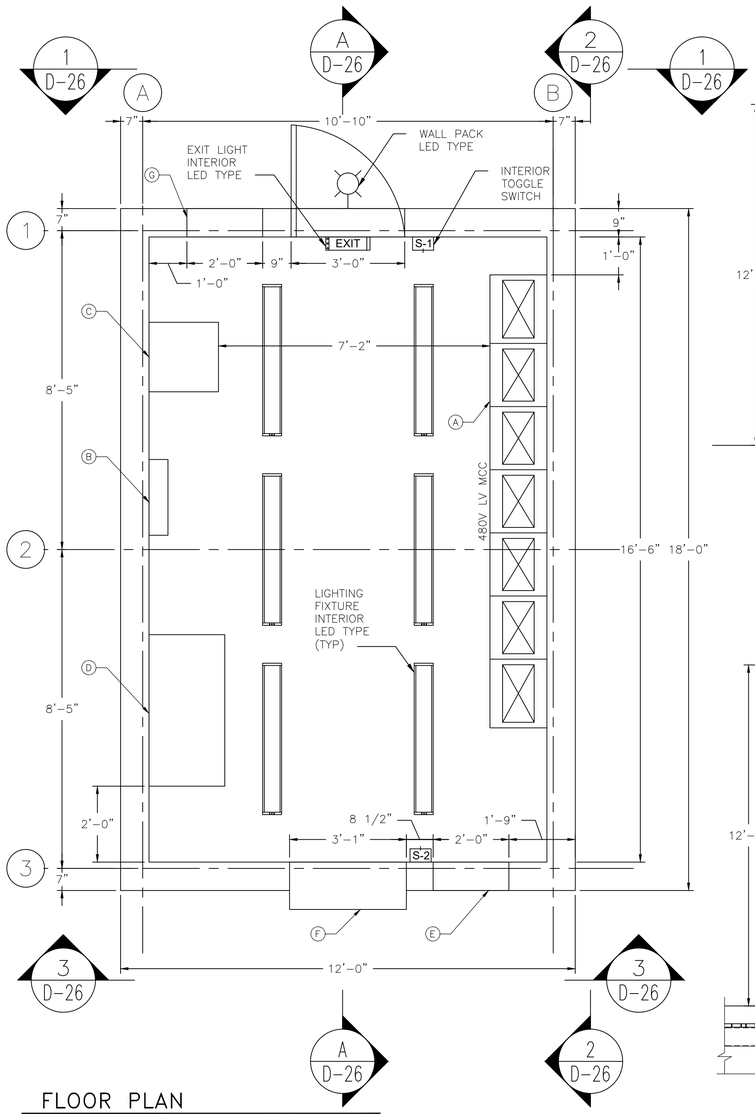

FLOOR PLAN

SCALE: 1/2"=1'-0"

NOTE: SEE D-27 FOR FOUNDATION DETAILS.

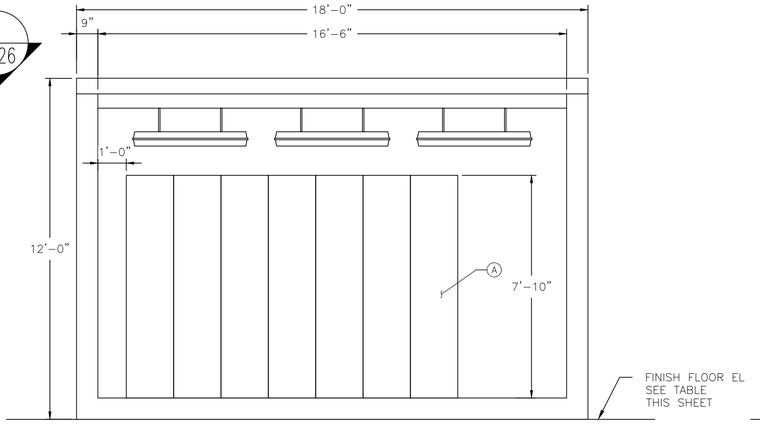

A TYPICAL SECTION

SCALE: 3/8" = 1'-0"

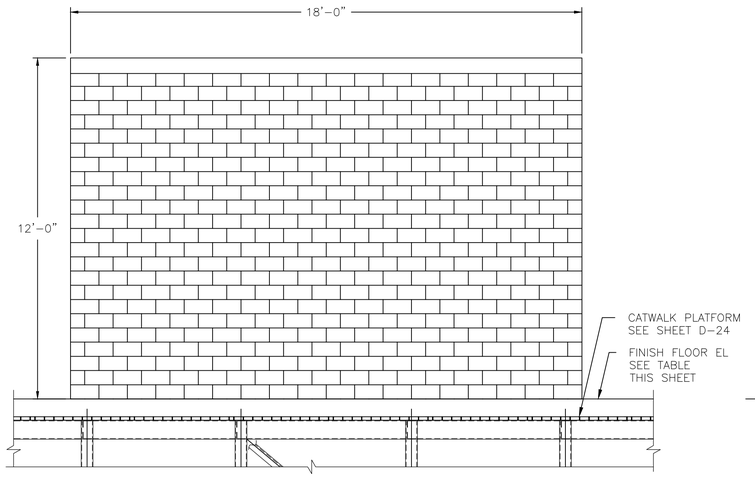

2 SIDE ELEVATION

SCALE: 3/8" = 1'-0"

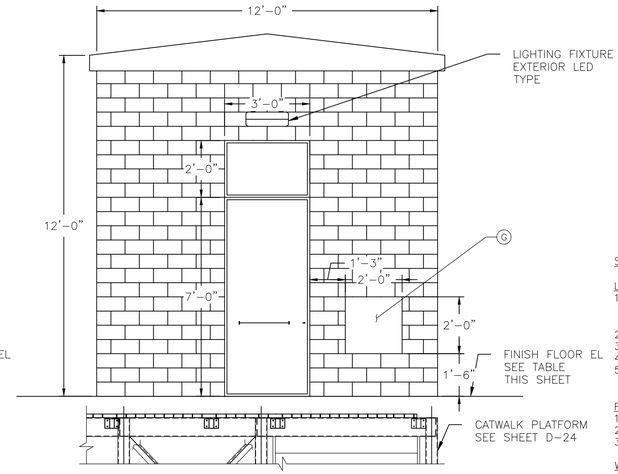

1 FRONT ELEVATION

SCALE: 3/8" = 1'-0"

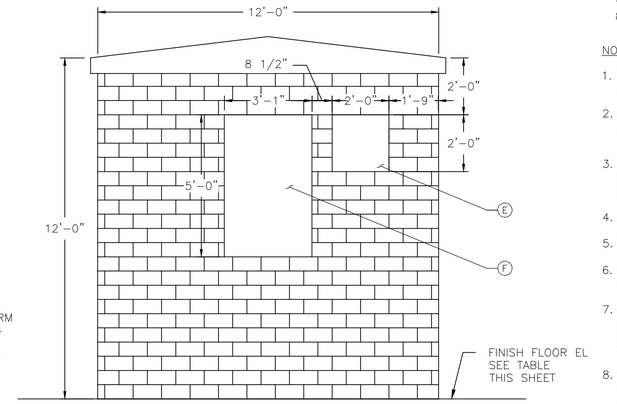

3 BACK ELEVATION

SCALE: 3/8" = 1'-0"

EQUIPMENT IDENTIFICATION LIST		
ITEM	TAG NO.	DESCRIPTION
A		480V MCC
B		480V – 240 / 120 V SINGLE PHASE POWER PANEL BOARD
C		480V – 240 / 120 V SINGLE PHASE LIGHTING TRANSFORMER
D		CONTROL PANEL
E		EXHAUST FAN
F		WALL MOUNTED HVAC UNIT/ W SS BURGLAR BARS (NOTE 8)
G		LOUVER

LIFT STATION	FLOOR FINISH EL (ft)
BRETSHIRE #1	53.94
ANNUNCIATION	66.05
RED GULLY	49.90
CHERRY OAK	79.24
EMNORA #2	94.40

LOUVER AND DAMPER SCHEDULE

UNIT NUMBER	LOCATION	MANUFACTURER	MODEL	TYPE	NOMINAL SIZE (WIDTH X HEIGHT)	OPERATOR	APPROX WEIGHT (LBS)	NOTES
L-1	BARD	RUSKIN	EME3625MD	HURRICANE PRONE LOUVER	24 X 24	-	-	1,2,3,4
L-2	BARD	RUSKIN	EME3625MD	HURRICANE PRONE LOUVER	24 X 24	-	-	1,2,3,4
D-1	BARD	RUSKIN	CBD4	BACKDRAFT	24 X 24	-	-	5
D-2	BARD	RUSKIN	CBD4	BACKDRAFT	24 X 24	-	-	5

AIR DEVICE SCHEDULE

SYMBOL	MANUFACTURER	MODEL	FRAME/BORDER	MODULE SIZE	MATERIAL	FINISH	DAMPER TYPE	NOTES
SG-1	BARD	SG-2W	SURFACE MOUNT	20 X 8	STEEL	POWDER WHITE	-	-
RG-1	BARD	RG-2W	SURFACE MOUNT	20 X 12	STEEL	POWDER WHITE	-	-

FAN SCHEDULE

UNIT NUMBER	LOCATION	MANUFACTURER	MODEL	FAN TYPE	AIRFLOW (CFM)	ESP (IN WG)	BRAKE HP	MOTOR HP	POWER SUPPLY		MINIMUM WHEEL DIA (IN)	WHEEL TYPE	DRIVE	VIBRATION ISOLATION	APPROX WEIGHT (LBS)	NOTES
									VOLTS	PHASE						
EF-1	LIFT STATION	GREENHECK	SE1-14-436-VG	WF	2000	0.375	0.3	1/2	240	1	14	P	DIRECT	INTERNAL	40	1,2,3

WALL MOUNTED AIR CONDITIONING UNIT

UNIT NUMBER	LOCATION	MANUFACTURER	MODEL	INDOOR FAN				POWER SUPPLY		MINIMUM CIRCUIT AMPACITY	COOLING					HEATING				DISCHARGE DIRECTION	ARI MINIMUM EFFICIENCY	OA (CFM)	FILTER DATA		ECONOMIZER DATA		APPROX WEIGHT (LBS)	NOTES
				AIRFLOW (CFM)	ESP (IN WG)	MOTOR HP	DRIVE	VOLTS	PHASE		EAT		CAPACITY (BTUH)		MIN CAPACITY STAGES	EAT	TYPE	CAPACITY (BTUH OR KW)	MINIMUM HEAT STAGES				TYPE	THICKNESS (IN)	TYPE	CONTROLS		
											(FDB)	(FWB)	SENSIBLE	TOTAL														
AC-1	LIFT STATION	BARD	W24AF-A05ZPXX3E	900	0.5	1/2	DIRECT	240	1	29	80	68	22,200	26,200	2	60	ELECTRIC	5	1	HORIZONTAL	11	1200	PLEATED	2	POWER EXHAUST	DIFFERENTIAL ENTHALPY	500	1,2,3,4,5,6,7,8,9

SCHEDULE NOTES:

LOUVER AND DAMPER SCHEDULE
1. COMPLIANT WITH AMCA 550 SECTION 315.1.1, 2021 UMC; SECTION 1604.5, 2021 IBC WITH HOUSTON AMENDMENTS FOR WIND AND RISK CATEGORIES.
2. 316 SS BIRD SCREEN 1/2" SIZE.
3. 53% MIN. FREE AREA.
4. WIND DRIVEN RAIN RESISTANT STATIONARY LOUVER
5. COUNTERBALANCED EXTRUDED ALUMINUM BACKDRAFT DAMPER SET AT 0.1" W.C.

FAN SCHEDULE
1. BACKDRAFT DAMPER, SEE DAMPER SCHEDULE
2. VARI-GREEN MOTOR WITH WALL-MOUNTED SWITCH
3. ALUMINUM WHEEL

WALL MOUNTED AIR CONDITIONING UNIT
1. SINGLE ZONE WALL PACKAGE A/C UNIT
2. ECM INDOOR FAN MOTOR TO ALLOW BALANCING OF CONSTANT SPEED DIRECT DRIVE FAN
3. INTEGRAL DEHUMIDIFICATION MODE
4. FILTER VELOCITY SHALL NOT EXCEED 350 FEET PER MINUTE.
5. MERV-8 2" PLEATED FILTERS
6. INTEGRAL FREE COOLING ECONOMIZER
7. LOW AMBIENT KIT AND CONTROLSLC6000 CONTROLLER
8. R-454B LOW GWP A2L REFRIGERANT

NOTES:

1. THE BUILDING IS GENERAL PURPOSE, NON-CLASSIFIED, NON BLAST RATED.
2. ELECTRICAL CONDUITS INTO CONTROL BUILDING SHALL BE LOCATED AND POSITIONED PRIOR TO POURING BUILDING FOUNDATION OR IF PRECAST.
3. THE HVAC UNITS SHALL BE SIZED BASED ON HEAT LOSS CALCULATIONS. COORDINATE AC / HEAT PUMP OPENING SIZE WITH SELECTED MANUFACTURER'S RECOMMENDATIONS.
4. BUILDING DOORS SHALL BE OF 316 STAINLESS STEEL TYPE.
5. THE SINGLE ENTRANCE DOORS SHALL BE 36"(W) X 84"(H).
6. REMOVABLE DOOR PANEL, 36"(W) X 24"(H) ABOVE THE DOOR.
7. OPENINGS FOR BELTLESS FAN (24" X 24") ON THE TOP OF WALL ELEVATION WITH 24" X 24" LOUVER ON THE BOTTOM. BOTH UNITS SHALL BE PROVIDED WITH REMOVABLE COVERS FOR STANDBY USE.
8. WALL UNIT SHALL BE HEAVY-DUTY EXTERIOR WALL MOUNTED HEAT PUMP TYPE UNIT. WINDOW AC UNITS NOT ALLOWED.

NO.	DATE	REVISION	APP.

ARCADIS
Infrastructure · Water · Environment · Buildings
1330 Post Oak Blvd, Suite 2250
Houston, TX 77056
Tel: 713-953-4800
Fax: 713-977-4620
www.arcadis.com
Texas Registered Engineering Firm F-533

SURVEYED BY: AMANI ENGR.
FB NO. P-6335

STATE OF TEXAS
DAVID F. RIDGWAY
105134
LICENSED PROFESSIONAL ENGINEER
02/23/2016

CITY OF HOUSTON
HOUSTON PUBLIC WORKS

LIFT STATION REHABILITATION & RECONSTRUCTION CONSENT DECREE

PRECAST CONCRETE CONTROL BUILDING & HVAC PLANS

D-26

WBS NUMBER	FOR CITY OF HOUSTON USE ONLY
R-000267-0175-4	
DRAWING SCALE	
AS NOTED	
CITY OF HOUSTON PM	
NP NAWARAJ PANTA, P.E.	
SHEET NO. 271 OF 312	

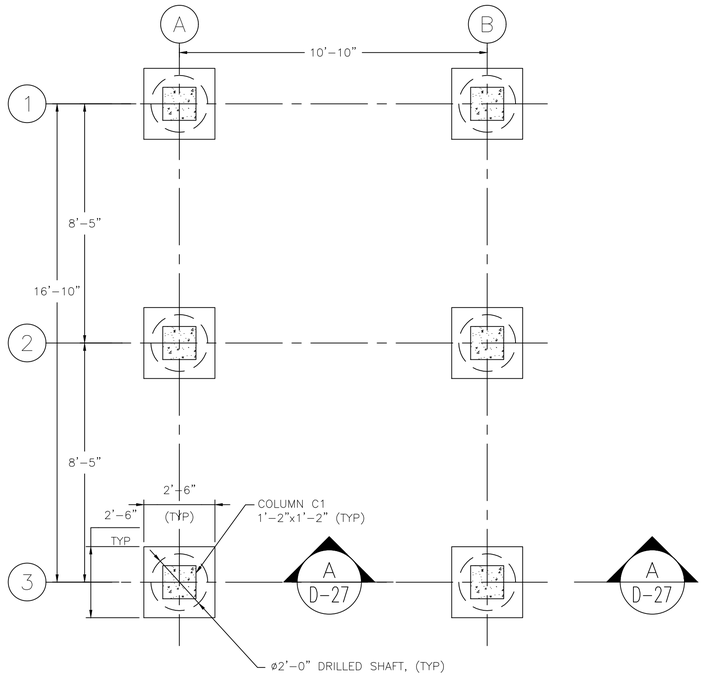

FOUNDATION PLAN

SCALE: 3/8"=1'-0"

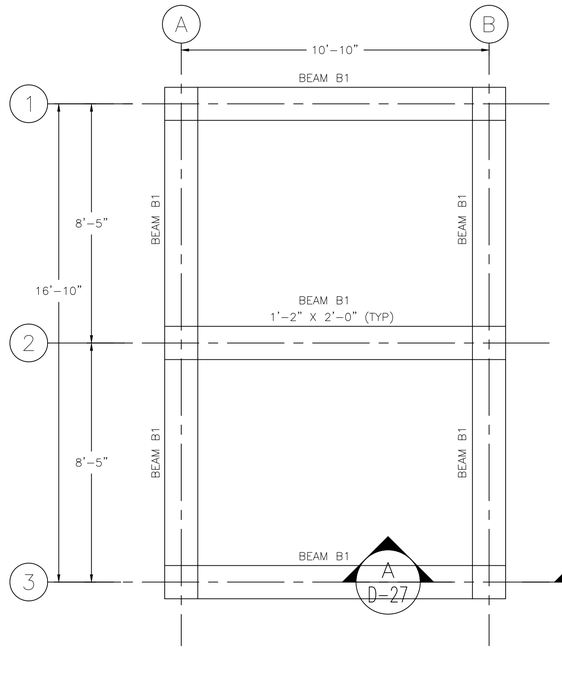

BEAM PLAN

SCALE: 3/8"=1'-0"

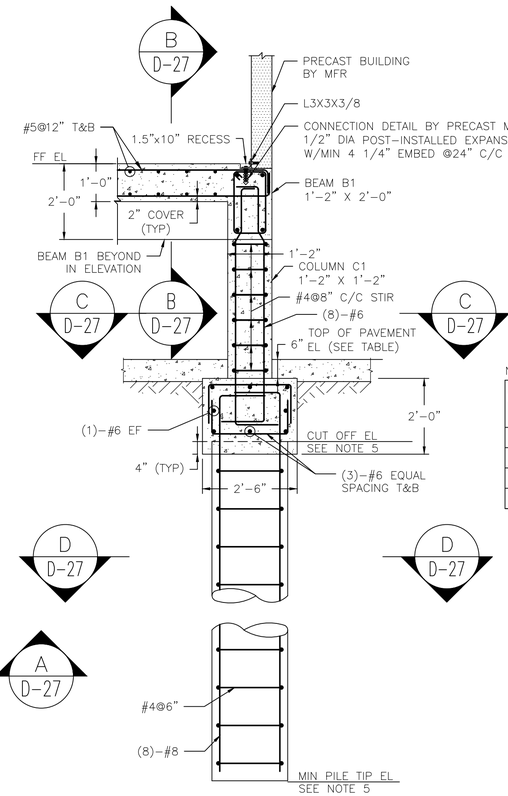

NOTE: FOR TOP OF PAVEMENT EL AND FLOOR FINISH EL SEE BELOW TABLE

PILE SIZE (Inch)	LOCATION	CUT OFF EL (ft)	MIN PILE TIP EL (ft)	TOP OF PAVEMENT EL (ft)	FLOOR FINISH EL (ft)
24	BRETSHIRE	45.73	26.8	47.9	53.94
24	ANNUNCIATION	58.93	29.9	61.10	66.05
24	RED GULLY	44.73	33.9	46.9	49.9
24	CHERRY OAKS	72.53	38.0	74.7	79.24

NOTES:

1. THIS DESIGN IS BASED ON THE PROVIDED BUILDING DIMENSIONS. FINAL BUILDING DIMENSIONS TO BE COORDINATED WITH MANUFACTURER DRAWINGS.
2. DESIGN SUPERIMPOSED LOADS AS NOTED:
   ROOF:
   DEAD LOAD (D) = 45 PSF
   LIVE LOAD (Lr) = 40 PSF
   FLOOR LOADS:
   FLOOR FINISH = 45 PSF
   LIVE LOAD (L) = 150 PSF
   WALL LOADS:
   DEAD LOAD (D) = 65 PSF
3. WIND LOADS:
   BASIC WIND SPEED (3-SEC GUST) (V): 150 MPH
   WIND EXPOSURE CATEGORY: C
4. SNOW LOADS:
   GROUND SNOW LOAD: 30 PSF
   ROOF SNOW LOAD: 35 PSF
5. FOR CUT OFF ELEVATIONS, PILE TIP ELEVATIONS, TOP OF PAVEMENT ELEVATIONS & FLOOR FINISH ELEVATIONS SEE TABLE ABOVE.
6. CONTRACTOR TO CONFIRM ANCHOR ROD LOCATION AND PROJECTIONS USING PRECAST MFR SHOP DRAWINGS.
7. EXPANSION ANCHOR SHALL BE STAINLESS STEEL CONFORMING TO ASTM A240, TYPE 304.
8. ANGLE SHALL BE STAINLESS STEEL CONFORMING TO ASTM A240, TYPE 304.

A SECTION

SCALE: 1/2"=1'-0"

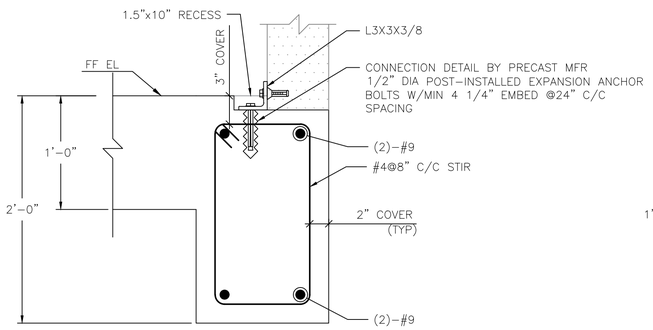

B SECTION (BEAM B1)

SCALE: 1 1/2"=1'-0"

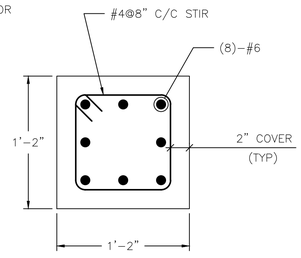

C SECTION (COLUMN C1)

SCALE: 1 1/2"=1'-0"

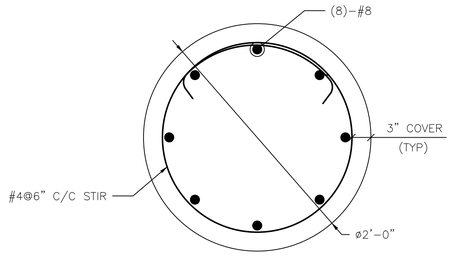

D PILE SECTION

SCALE: 1 1/2"=1'-0"

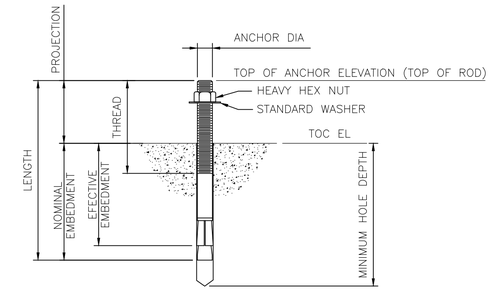

EXPANSION ANCHOR DETAIL

SCALE: 1/4"=1'-0"

NO.	DATE	REVISION	APP.

ARCADIS
Infrastructure · Water · Environment · Buildings
1330 Post Oak Blvd, Suite 2250
Houston, TX 77056
Tel: 713-953-4800
Fax: 713-977-4620
www.arcadis.com
Texas Registered Engineering Firm F-533

SURVEYED BY: AMANI ENGR.
FB NO. P-6335

STATE OF TEXAS
TANVIR HOSSAIN
121767
LICENSED
PROFESSIONAL ENGINEER

CITY OF HOUSTON

HOUSTON PUBLIC WORKS

LIFT STATION REHABILITATION & RECONSTRUCTION
CONSENT DECREE

PRECAST CONCRETE CONTROL BUILDING FOUNDATION

D-27

WBS NUMBER	FOR CITY OF HOUSTON USE ONLY
R-000267-0175-4	
DRAWING SCALE	
AS NOTED	
CITY OF HOUSTON PM	
NP NAWARAJ PANTA, P.E.	
SHEET NO. 272 OF 312	

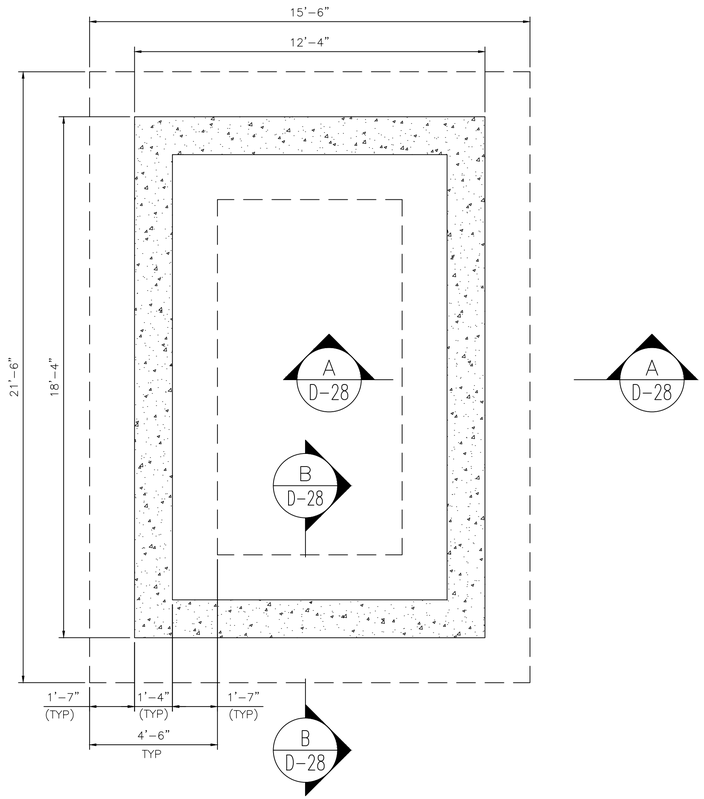

FOUNDATION PLAN

SCALE: 3/8"=1'-0"

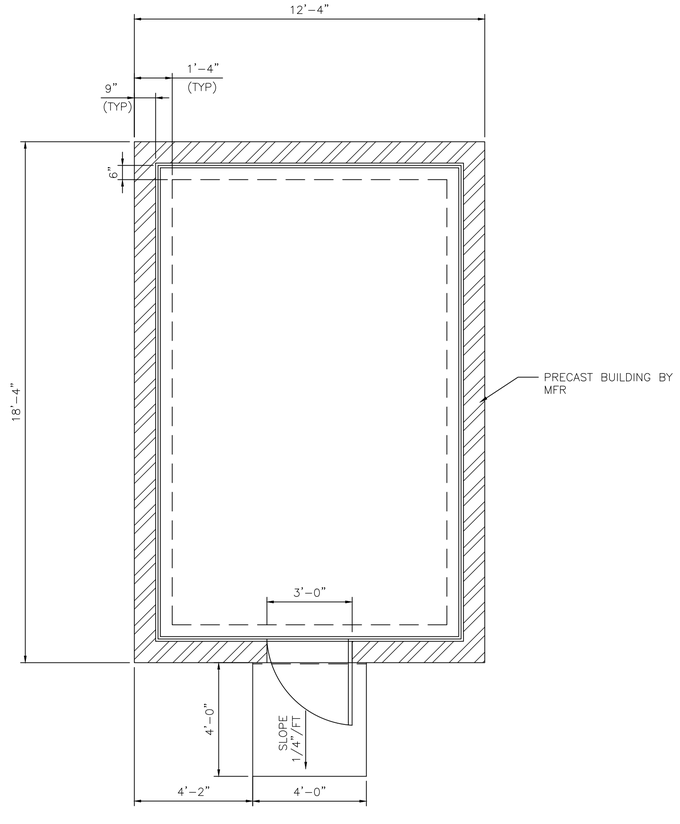

GRADE SLAB PLAN

SCALE: 3/8"=1'-0"

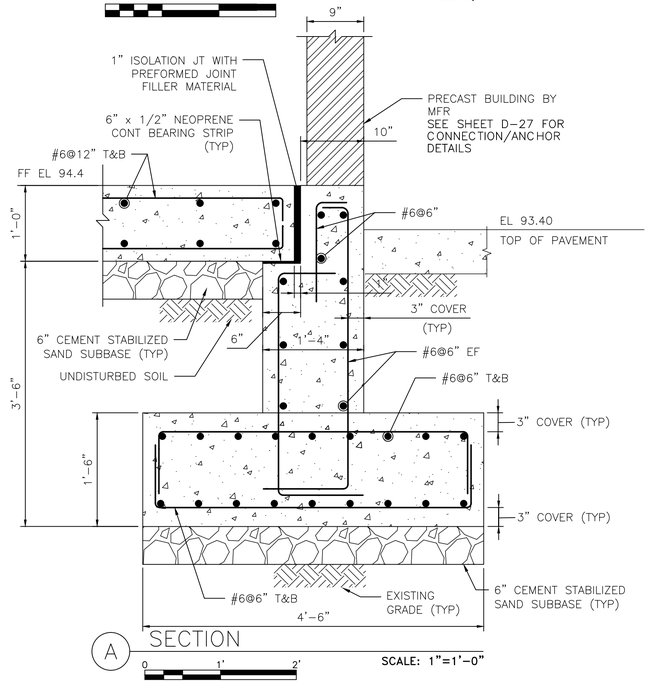

A SECTION

SCALE: 1"=1'-0"

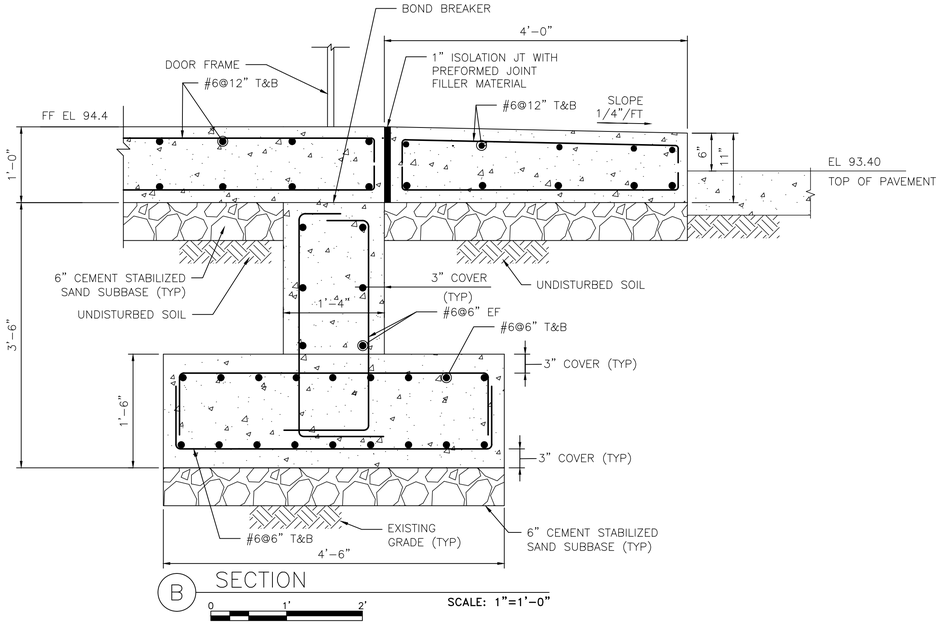

B SECTION

SCALE: 1"=1'-0"

NO.	DATE	REVISION	APP.

NOTES:

1. THIS DESIGN IS BASED ON THE PROVIDED BUILDING DIMENSIONS. FINAL BUILDING DIMENSIONS TO BE COORDINATED WITH MANUFACTURER DRAWINGS.

2. DESIGN SUPERIMPOSED LOADS AS NOTED:
   ROOF:
   DEAD LOAD (D) = 45 PSF
   LIVE LOAD (Lr) = 40 PSF
   FLOOR LOADS:
   FLOOR FINISH = 45 PSF
   LIVE LOAD (L) = 150 PSF
   WALL LOADS:
   DEAD LOAD (D) = 65 PSF

3. WIND LOADS:
   BASIC WIND SPEED (3-SEC GUST) (V): 150 MPH
   WIND EXPOSURE CATEGORY: C

4. DESIGN NET ALLOWABLE BEARING PRESSURE: 2500 PSF.

ARCADIS
Infrastructure · Water · Environment · Buildings
1330 Post Oak Blvd, Suite 2250
Houston, TX 77056
Tel: 713-953-4800
Fax: 713-977-4620
www.arcadis.com
Texas Registered Engineering Firm F-533

SURVEYED BY: AMANI ENGR.
FB NO. P-6335

STATE OF TEXAS
TANVIR HOSSAIN
121767
LICENSED PROFESSIONAL ENGINEER

CITY OF HOUSTON

HOUSTON PUBLIC WORKS

LIFT STATION REHABILITATION & RECONSTRUCTION CONSENT DECREE

ENMORA #2 PRECAST CONCRETE CONTROL BUILDING FOUNDATION

D-28

WBS NUMBER	FOR CITY OF HOUSTON USE ONLY
R-000267-0175-4	
DRAWING SCALE	
AS NOTED	
CITY OF HOUSTON PM	
NP NAWARAJ PANTA, P.E.	
SHEET NO. 273 OF 312	

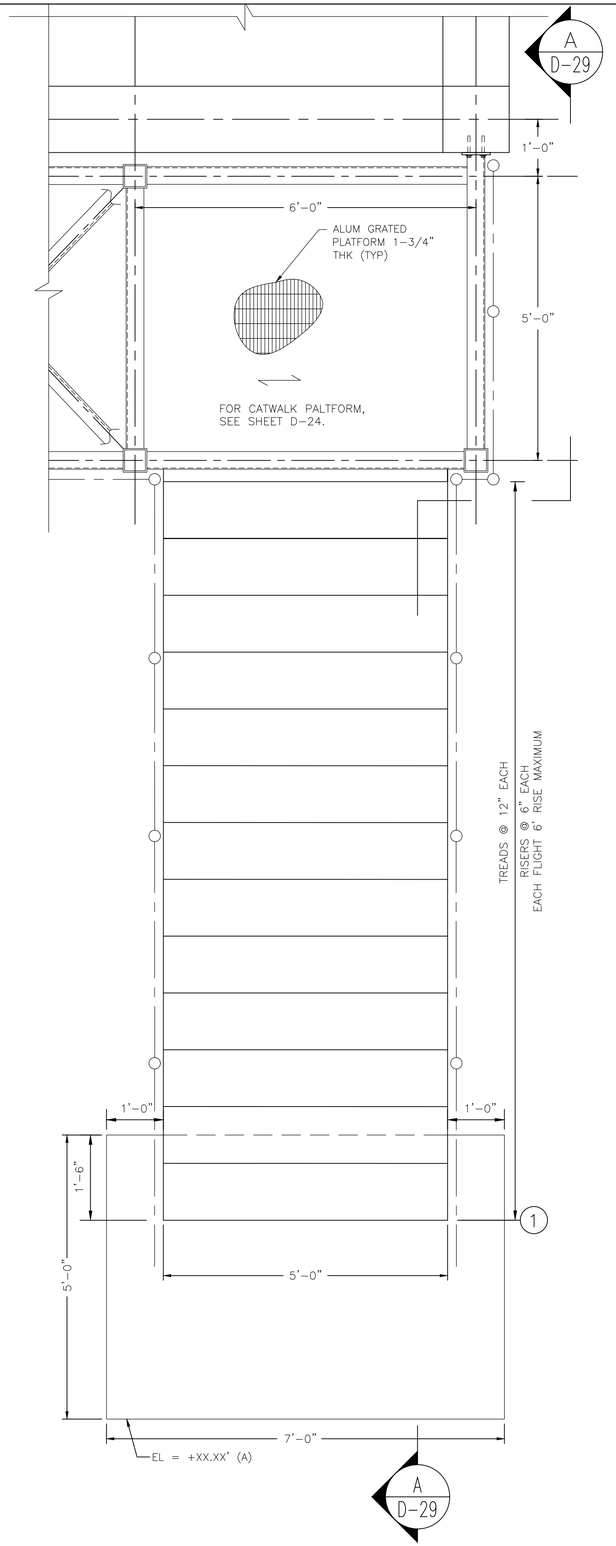

STAIRCASE PLAN

SCALE: 3/4"=1'-0"

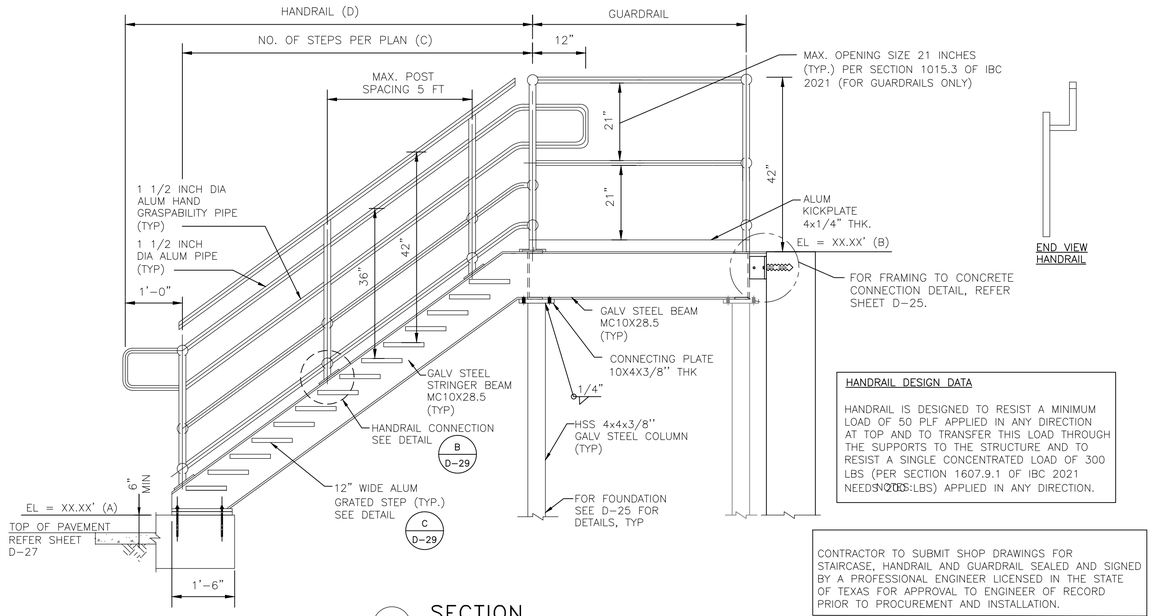

A SECTION

SCALE:NTS

END VIEW HANDRAIL

HANDRAIL DESIGN DATA

HANDRAIL IS DESIGNED TO RESIST A MINIMUM LOAD OF 50 PLF APPLIED IN ANY DIRECTION AT TOP AND TO TRANSFER THIS LOAD THROUGH THE SUPPORTS TO THE STRUCTURE AND TO RESIST A SINGLE CONCENTRATED LOAD OF 300 LBS (PER SECTION 1607.9.1 OF IBC 2021 NEEDS NOTES:LBS) APPLIED IN ANY DIRECTION.

CONTRACTOR TO SUBMIT SHOP DRAWINGS FOR STAIRCASE, HANDRAIL AND GUARDRAIL SEALED AND SIGNED BY A PROFESSIONAL ENGINEER LICENSED IN THE STATE OF TEXAS FOR APPROVAL TO ENGINEER OF RECORD PRIOR TO PROCUREMENT AND INSTALLATION.

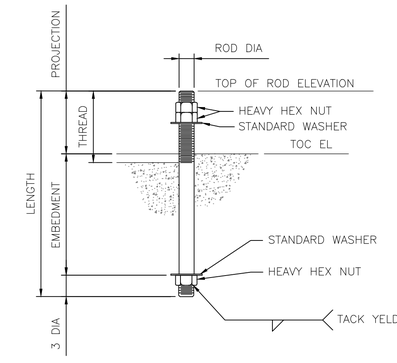

ANCHOR ROD DETAIL

0 2' 4' 8'

SCALE: 1/4"=1'-0"

LIFT STATION	ELEVATION (FT)		COUNT (NO)	DIMENSION (FT)
	A	B	C	D
BRETSHIRE #1	48.4	53.94	12	13
CHERRY OAK	75.2	79.24	9	10
RED GULLY	47.4	49.9	6	7
ANNUNCIATION	61.6	66.05	10	11

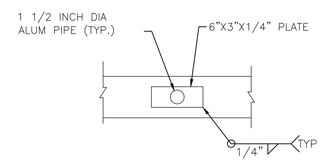

B TOP MOUNTED HANDRAIL ON STRINGER BEAM

SCALE:NTS

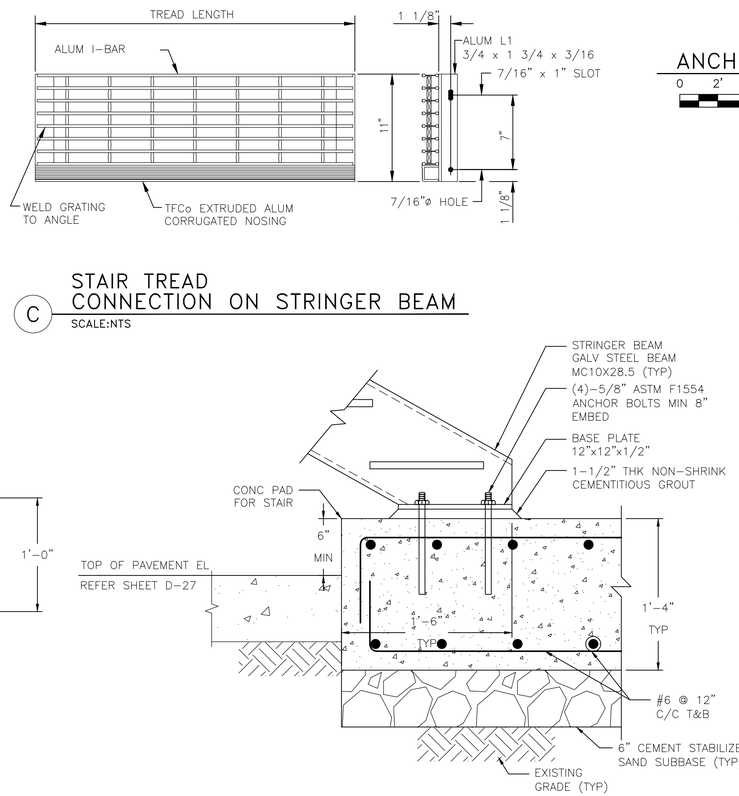

C STAIR TREAD CONNECTION ON STRINGER BEAM

SCALE:NTS

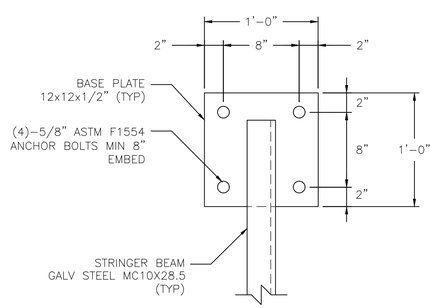

BASE PLATE DETAIL – IN PLAN

0 1' 2'

SCALE: 1 1/2"=1'-0"

BASE PLATE DETAIL – IN SECTION

0 1' 2'

SCALE: 1 1/2"=1'-0"

NOTES:

1. FOR STRUCTURAL NOTES, SEE SHEET G-7
2. CONTRACTOR TO CONFIRM ANCHOR ROD PROJECTIONS.

NO.	DATE	REVISION	APP.

ARCADIS
Infrastructure · Water · Environment · Buildings
1330 Post Oak Blvd, Suite 2250
Houston, TX 77056
Tel: 713-953-4800
Fax: 713-977-4620
www.arcadis.com
Texas Registered Engineering Firm F-533

SURVEYED BY: AMANI ENGR.
FB NO. P-6335

STATE OF TEXAS
TANVIR HOSSAIN
121767
LICENSED PROFESSIONAL ENGINEER

CITY OF HOUSTON

HOUSTON PUBLIC WORKS

LIFT STATION REHABILITATION & RECONSTRUCTION CONSENT DECREE

CATWALK PLATFORM CABINET STAIRCASE DETAILS

D-29

WBS NUMBER	FOR CITY OF HOUSTON USE ONLY
R-000267-0175-4	
DRAWING SCALE	
AS NOTED	
CITY OF HOUSTON PM	
NP NAWARAJ PANTA, P.E.	
SHEET NO. 274 OF 312	

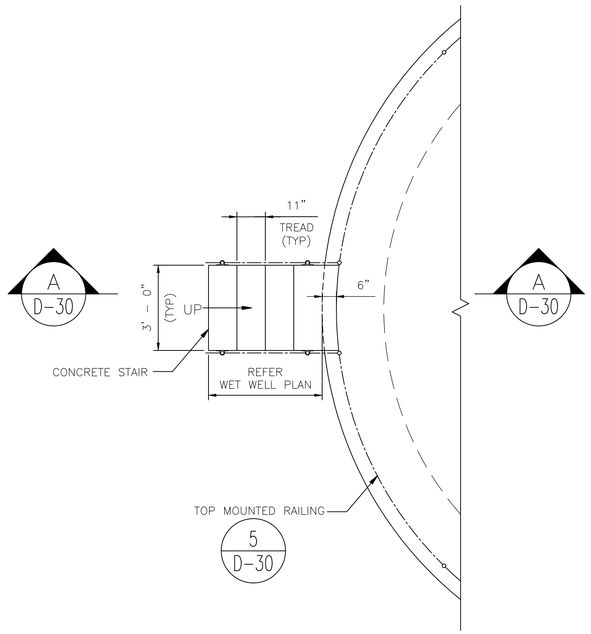

1 TYPICAL CONCRETE STAIR PLAN

0 2' 4' 6' SCALE: 3/8" = 1'-0"

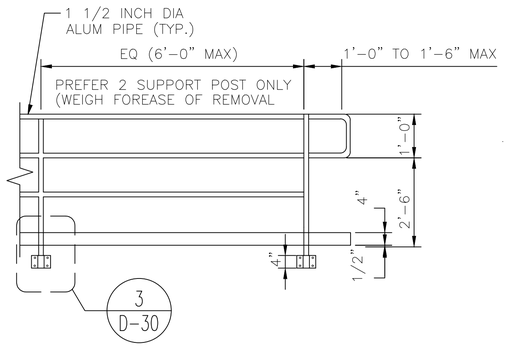

2 GUARDRAIL DETAIL

0 1' 2' 4' SCALE: 1/2" = 1'-0"

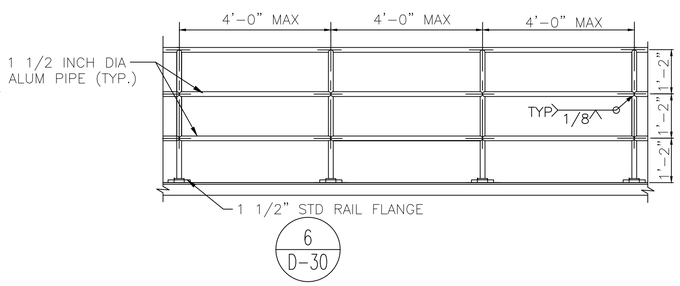

5 TOP MOUNTED RAILING DETAIL

0 1' 2' 4' SCALE: 1/2" = 1'-0"

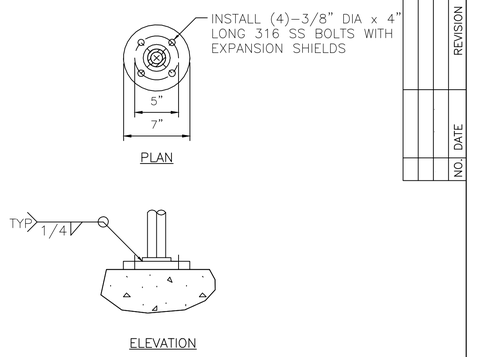

6 DETAIL

0 1' 2' SCALE: 1" = 1'-0"

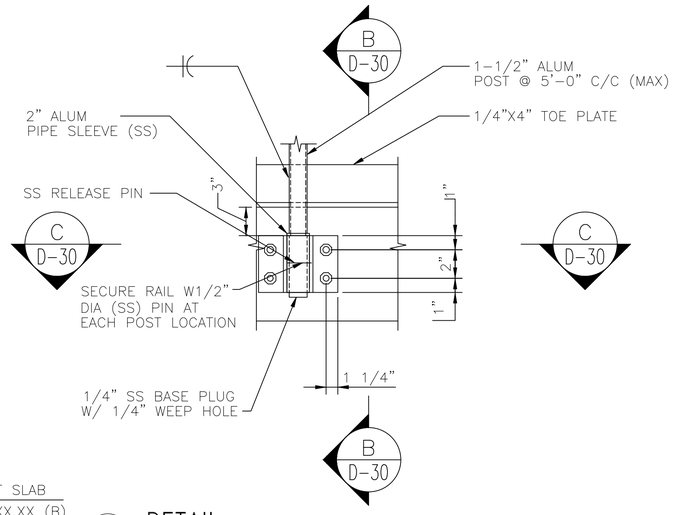

3 DETAIL

0 1' 2' SCALE: 1 1/2" = 1'-0"

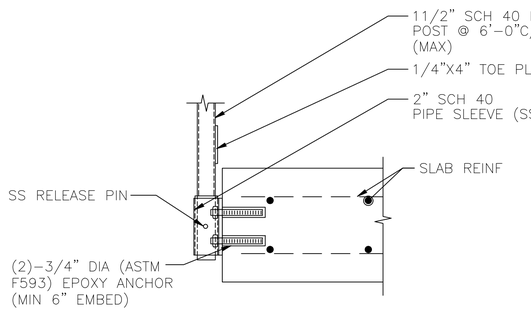

HANDRAIL DESIGN DATA

HANDRAIL IS DESIGNED TO RESIST A MINIMUM LOAD OF 50 PLF APPLIED IN ANY DIRECTION AT TOP AND TO TRANSFER THIS LOAD THROUGH THE SUPPORTS TO THE STRUCTURE AND TO RESIST A SINGLE CONCENTRATED LOAD OF 300 LBS (PER SECTION 1607.9.1 OF IBC 2021 NEEDS 200 LBS) APPLIED IN ANY DIRECTION.

NOTES:
CONTRACTOR TO SUBMIT SHOP DRAWINGS FOR STAIRCASE, HANDRAIL AND GUARDRAIL SEALED AND SIGNED BY A PROFESSIONAL ENGINEER LICENSED IN THE STATE OF TEXAS FOR APPROVAL TO ENGINEER OF RECORD PRIOR TO PROCUREMENT AND INSTALLATION.

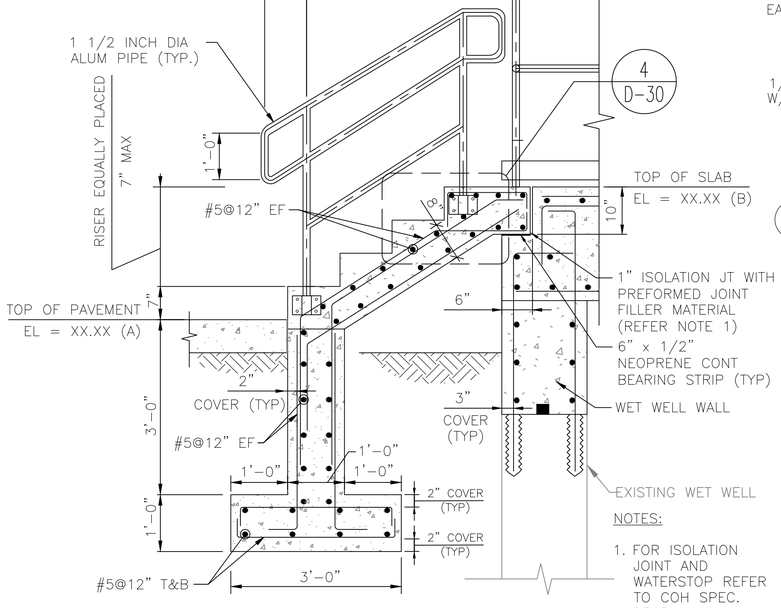

LIFT STATION	ELEVATION (FT)	
	A	B
BRETSHIRE #1	47.9	50.90
CHERRY OAK	74.7	77.90
ANNUNCIATION	61.10	63.00

A SECTION

0 1' 2' 3' SCALE: 3/4" = 1'-0"

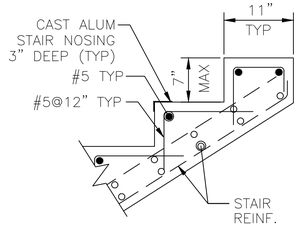

4 DETAIL

0 1' 2' SCALE: 1" = 1'-0"

B SECTION

0 1' 2' 4' SCALE: 1/2" = 1'-0"

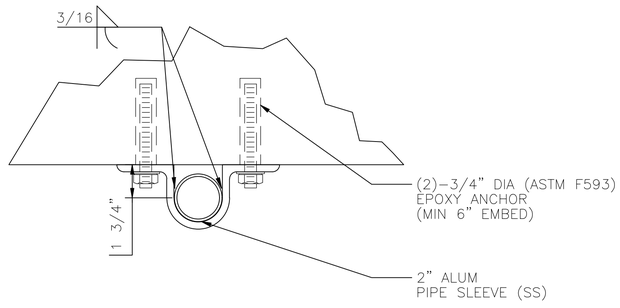

C SECTION

0 3" 6" 9" SCALE: 3" = 1'-0"

NOTES:

1. FOR NON SHRINK GROUT REFER TO SPECIFICATION SECTION 03600.

ARCADIS
Infrastructure · Water · Environment · Buildings
1330 Post Oak Blvd, Suite 2250
Houston, TX 77056
Tel: 713-953-4800
Fax: 713-977-4620
www.arcadis.com
Texas Registered Engineering Firm F-533

SURVEYED BY: AMANI ENGR.
FB NO. P-6335

STATE OF TEXAS
TANVIR HOSSAIN
121767
LICENSED
PROFESSIONAL ENGINEER

CITY OF HOUSTON

HOUSTON PUBLIC WORKS

LIFT STATION REHABILITATION & RECONSTRUCTION
CONSENT DECREE

CONCRETE STAIR DETAILS

D-30

WBS NUMBER	FOR CITY OF HOUSTON USE ONLY
R-000267-0175-4	
DRAWING SCALE	
AS NOTED	
CITY OF HOUSTON PM	
NP NAWARAJ PANTA, P.E.	
SHEET NO. 275 OF 312	

NO.	DATE	REVISION	APP.

LUMINAIRE SCHEDULE

FIXTURE TYPE	VOLTAGE	LAMP TYPE	TOTAL INPUT WATTS	TOTAL OUTPUT LUMENS	MOUNT	DESCRIPTION	MAKE/MODEL
A	120/277V UNIVERSAL DRIVER	LED	25	3,000	RECESSED GRID	2'X4' LAY-IN T-GRID DIRECT/INDIRECT TROFFER FIXTURE, STEEL HOUSING, POWDER COATED, WHITE COATING, RATED UP TO 25°C OPERATING TEMPERATURE, COLOR TEMPERATURE OF 4000K, 70CRI.	LITHONIA 2ALL SERIES 2'X4' TROFFER 2ALL4-30L-LP480 PHILLIPS DAY-BRITE COFFAIRE CF-S-24-G-30L-40-U
B	120/277V UNIVERSAL DRIVER	LED	13	---	STEM MOUNT	RED POLYCARBONATE LENS SUITABLE FOR WET LOCATIONS - 120V, SERIES 105 XBR	---
B1	120/277V UNIVERSAL DRIVER	LED	42	4000	SUSPENDED	LINEAR LED LUMINAIRE, UV-STABILIZED, INJECTION-MOLDED, IMPACT-RESISTANT, FROSTED POLYCARBONATE HOUSING, -29°C TO 40°C OPERATING TEMPERATURE, 4000K COLOR TEMPERATURE, 80CRI, UV-STABILIZED, INJECTION-MOLDED, IMPACT-RESISTANT CLEAR POLYCARBONATE LENS, UL 1598 WET LOCATION LISTED.	LITHONIA ARCHWAY VAP LED SERIES VAP-4000L-PCL-WD-MVOLT-40K-80CRI-VAPCMB DAY-BRITE CFI VAPORLUME LED V2 V2WPB70L840-4-UNV TBK OR WBK ACESSORY & FKR-126
B2	120/277V UNIVERSAL DRIVER	LED	62	6000	SUSPENDED	LINEAR LED LUMINAIRE, UV-STABILIZED, INJECTION-MOLDED, IMPACT-RESISTANT, FROSTED POLYCARBONATE HOUSING, -29°C TO 40°C OPERATING TEMPERATURE, 4000K COLOR TEMPERATURE, 80CRI, UV-STABILIZED, INJECTION-MOLDED, IMPACT-RESISTANT CLEAR POLYCARBONATE LENS, UL 1598 WET LOCATION LISTED.	LITHONIA ARCHWAY VAP LED SERIES VAP-6000L-PCL-WD-MVOLT-40K-80CRI DAY-BRITE CFI VAPORLUME LED V2 V2WPB70L840-4-UNV TBK OR WBK ACESSORY & FKR-126
B3	120/277V UNIVERSAL DRIVER	LED	62	6000	SUSPENDED	LINEAR LED LUMINAIRE, UV-STABILIZED, INJECTION-MOLDED, IMPACT-RESISTANT, FROSTED POLYCARBONATE HOUSING, -29°C TO 40°C OPERATING TEMPERATURE, 4000K COLOR TEMPERATURE, 80CRI, UV-STABILIZED, INJECTION-MOLDED, IMPACT-RESISTANT CLEAR POLYCARBONATE LENS, UL 1598 WET LOCATION LISTED.	LITHONIA ARCHWAY VAP LED SERIES VAP-6000L-PCL-WD-MVOLT-40K-80CRI DAY-BRITE CFI VAPORLUME LED V2 V2WPB70L840-4-UNV TBK ACESSORY
B4	120/277V UNIVERSAL DRIVER	LED	84	10000	SUSPENDED	LINEAR LED LUMINAIRE, UV-STABILIZED, IMPACT-RESISTANT, FROSTED POLYCARBONATE HOUSING, -29°C TO 40°C OPERATING TEMPERATURE, 5000K COLOR TEMPERATURE, 80CRI, UV-STABILIZED, INJECTION-MOLDED, IMPACT-RESISTANT CLEAR POLYCARBONATE LENS, UL 1598 WET LOCATION LISTED.	LITHONIA CSS LED SERIES CSS-L96-ALO4-MVOLT-50K-80CRI-WG
C	120/277V UNIVERSAL DRIVER	LED	27.6	3,000	RECESSED CEILING	RECESSED DOWNLIGHT LUMINAIRE, METAL FORMED ALUMINUM CONSTRUCTION. 3500K COLOR TEMPERATURE, 80CRI, ALUMINUM SEMI-SPECULAR CLEAR REFLECTOR, MEDIUM LIGHT (50' BEAM) DISTRIBUTION, 1% TO 100% DIMMING (0-10V).	EATON PORTFOLIO SERIES LD4B3D010EU4B300080354LBMH1
D	120/277V UNIVERSAL DRIVER WITH EMERGENCY BATTERY PACK WITH PHOTO CELL	LED	12W	1500	WALL	POWDER COATED DIE-CAST ALUMINUM HOUSING, NATURAL ALUMINUM FINISH, -30°C TO 40°C OPERATING TEMPERATURE, 4000K COLOR TEMPERATURE, 70CRI, GASKETED LENS, IESNA TYPE III DISTRIBUTION, NEMA 4X RATED, WET LOCATION RATED, WITH EMERGENCY BATTERY PACK.	LITHONIA LIGHTING WST LED SERIES WST LED P1 40K VF MVOLT E20WC GARDCO LED WALL SCONCE 101L SERIES 101L-16L-530-NW-G1-3-EBPC-UNV-MGY
E	120/277V UNIVERSAL DRIVER WITH EMERGENCY BATTERY PACK	LED	1.2	536	WALL 8-FT ABOVE FLOOR	LED STANDBY EMERGENCY LUMINAIRE, WHITE ENGINEERING GRADE THERMOPLASTIC HOUSING, 16°C TO 32°C OPERATING TEMPERATURE, IMPACT RESISTANT, CORROSION-PROOF, DAMP LOCATION RATED, EMERGENCY BATTERY PACK INCLUDED.	LITHONIA ELM6 LED SERIES LV-S-W1R-120/277-EL-N-UM-DL
F	208V UNIVERSAL DRIVER WITH EMERGENCY BATTERY PACK	LED	62	-	POLE MOUNT	HIGH EFFICIENCY LED UNIT WITH PRISMATIC BOROSILICATE GLASS; UL LISTED FOR WET LOCATION USE WITH 208VAC PHOTO CELL	HUBBLE SERIES EML EMLC-50W-30D4 WITH PHOTO CELL OR EQUAL
G	MVOLT (120/277 UNIVERSAL DRIVER)	LED	70	8,708	POLE MOUNTED	LED AREA LUMINAIRE, POWDER COATED DIE-CAST ALUMINUM HOUSING, -29°C TO 40°C OPERATING TEMPERATURE, 4000K COLOR TEMPERATURE, UL 1598 WET LOCATION LISTED.	LITHONIA LIGHTING D-SERIES POLE MOUNT DSX1 LED P2 40K T4M MVOLT RPA FAO DDBXD
H	MVOLT (120/277 UNIVERSAL DRIVER)	LED	30	-	STANCHION MOUNT	BODY MOUNTING MODULES AND GUARD-COPPER-FREE AL WITH CORRO-FREE EPOXY POWDER COAT. SUITABLE FOR CLASS I, DIVISION I HAZARDOUS LOCATIONS.	CROUSE-HINDS EV LED J4C701
J	120/277V UNIVERSAL DRIVER WITH EMERGENCY BATTERY PACK	LED	22	-	WALL/COLUMN MOUNT	EMERGENCY EFFICIENT 40% REDUCTION IN ENERGY. HIGH QUALITY LED LEAD FREE ENVIRONMENTALLY FRIENDLY EXPLOSION PROOF SUITABLE FOR ZONES 1 AND 2.	CROUSE-HINDS EV35UD LED SPU. EV/AB OR EQUAL
X	120/277V UNIVERSAL DRIVER WITH EMERGENCY BATTERY PACK	LED	18.2	N/A	UNIVERSAL	EMERGENCY EXIT SIGN, CAST-ALUMINUM, NEMA-4X, CLEAR UV-STABLE POLYCARBONATE COVER, SINGLE WHITE POLYCARBONATE, FACEPLATE WITH DIRECTIONAL CHEVRON KNOCKOUTS. WHITE HOUSING, UNIVERSAL MOUNT, SEALED MAINTENANCE-FREE NICKEL CADMIUM BATTERY WITH 90 MINUTE CAPACITY.	LITHONIA LIGHTING LV EL N LED SERIES LV-S-W-2-R-120/277-EL N-UM-4X
TPA	N/A	N/A	N/A	N/A	BASE MOUNTED POLE	ROUND STRAIGHT ALUMINUM POLE, 4" DIAMETER WITH 2-3/8" TENON, 8' POLE WITH LOW PROFILE BASE COVER, HANDHOLE WITH RECESSED COVER. RATED FOR 150 MPH. MATCH TENON TO LUMINAIRE TYPE.	LITHONIA LIGHTING FLORIDA RATED POLE RSALP 8 4C T20 VD DNA
TPB	N/A	N/A	N/A	N/A	BASE MOUNTED POLE	ROUND STRAIGHT ALUMINUM POLE, 4" DIAMETER WITH 2-3/8" TENON, 12' POLE WITH LOW PROFILE BASE COVER, HANDHOLE WITH RECESSED COVER. RATED FOR 150 MPH. MATCH TENON TO LUMINAIRE TYPE.	LITHONIA LIGHTING FLORIDA RATED POLE RSALP 12 4C T20 VD DNA
TPC	N/A	N/A	N/A	N/A	BASE MOUNTED POLE	ROUND STRAIGHT ALUMINUM POLE, 5" DIAMETER WITH 2-3/8" TENON, 16' POLE WITH LOW PROFILE BASE COVER, HANDHOLE WITH RECESSED COVER. RATED FOR 150 MPH. MATCH TENON TO LUMINAIRE TYPE.	LITHONIA LIGHTING FLORIDA RATED POLE RSALP 16 5C T20 VD DNA

FIXTURE TYPE	VOLTAGE	LAMP TYPE	TOTAL INPUT WATTS	TOTAL OUTPUT LUMENS	MOUNT	DESCRIPTION	MAKE/MODEL
TPD	N/A	N/A	N/A	N/A	BASE MOUNTED POLE	SQUARE STRAIGHT ALUMINUM POLE, 6" WIDTH, 30' POLE WITH LOW PROFILE BASE COVER, HANDHOLE WITH RECESSED COVER. RATED FOR 150 MPH.	LITHONIA LIGHTING FLORIDA RATED POLE SSA 30 6J DM19 VD DNA

NO.	DATE	REVISION	APP.

GAI
Gupta & Associates, Inc.
CONSULTING ENGINEERING
Registration No. F-2593
302 Dennis St., Houston, Texas 77006
Tel: 713-636-2936
Fax: 713-636-2957
email: hforouzan@gaiconsulting.com

ARCADIS
Infrastructure · Water · Environment · Buildings
1330 Post Oak Blvd, Suite 2250
Houston, TX 77056
Tel: 713-953-4800
Fax: 713-977-4620
www.arcadis.com
Texas Registered Engineering Firm F-533
SURVEYED BY: AMANI ENGR.
FB NO. P-6335

STATE OF TEXAS · H. A. FOROUZAN · 77748 · REGISTERED PROFESSIONAL ENGINEER
11/18/2025

CITY OF HOUSTON
HOUSTON PUBLIC WORKS

LIFT STATION REHABILITATION & RECONSTRUCTION CONSENT DECREE

ELECTRICAL – LIGHTING FIXTURE SCHEDULE

D-31

WBS NUMBER	FOR CITY OF HOUSTON USE ONLY
R-000267-0175-4	
DRAWING SCALE	
NONE	
CITY OF HOUSTON PM	
NP NAWARAJ PANTA, P.E.	
SHEET NO. 276 OF 312	

FILE PATH: O:\H8103_Houston Lift Station Removal And Replacement (CMAR)\6 Drawings\Electrical\Working\Electrical Details\H8103_D-31.dwg
PLOT STYLE: COH.ctb PLOTTED: 11/18/2025 6:48 PM

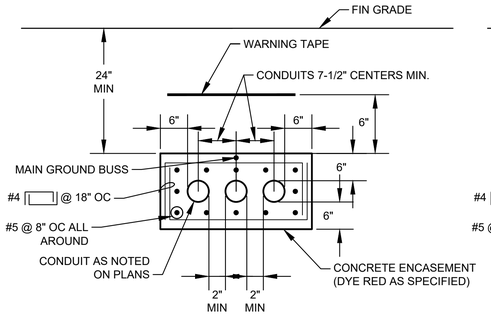

TYP MULTI-CONDUIT DUCTBANK SECTION

NOTE: TIE MAIN GROUNDING BUS TO REBAR AT A MAXIMUM INTERVAL OF EVERY 20 FEET.

DETAIL 1 / NTS

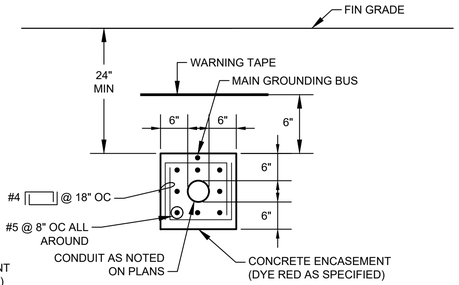

TYP SINGLE-CONDUIT DUCTBANK SECTION

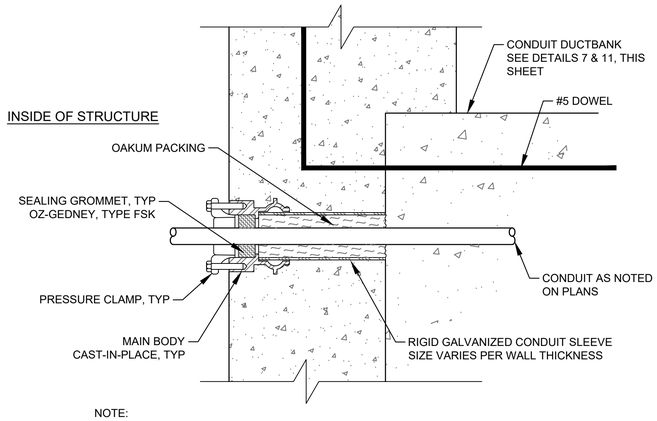

NOTE:

WALL SEAL SHOWN IS TYPICAL FOR EACH CONDUIT IN DUCTBANK.

SINGLE ENDED TYPE

FOR USE WHERE CONDUIT OUTSIDE THE STRUCTURE IS ENCASED IN CONCRETE

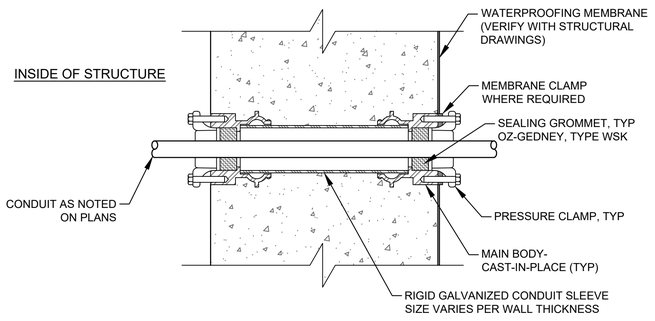

DOUBLE ENDED TYPE WITH MEMBRANE

FOR USE WHERE CONDUIT OUTSIDE THE STRUCTURE IS ENCASED IN CONCRETE

TYPICAL CONDUIT SEALS

DETAIL 4 / NTS

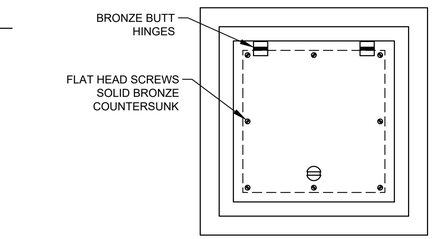

TOP PLAN

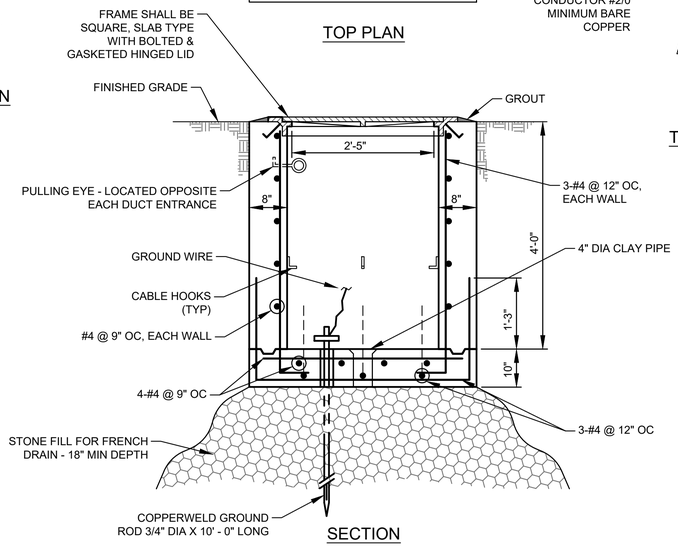

SECTION

TYPICAL ELECTRICAL HANDHOLE CONSTRUCTION

DETAIL 2 / NTS

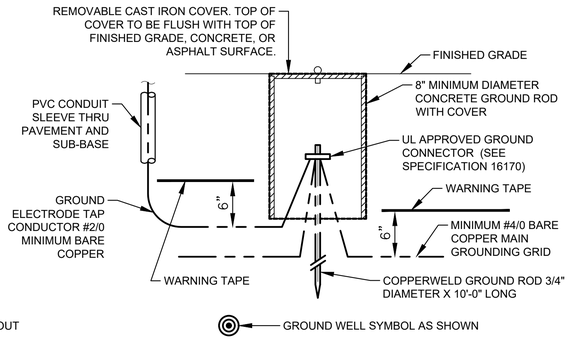

TYPICAL GROUND ROD AND WELL INSTALLATION

DETAIL 3 / NTS

GROUND CONNECTOR SCHEDULE	
WIRE SIZE	BURNDY
#2 AWG	GAR 6426
#2/0 AWG	GAR 6426
#4/0 AWG	GAR 6429
500 kcmil	GAR 6434

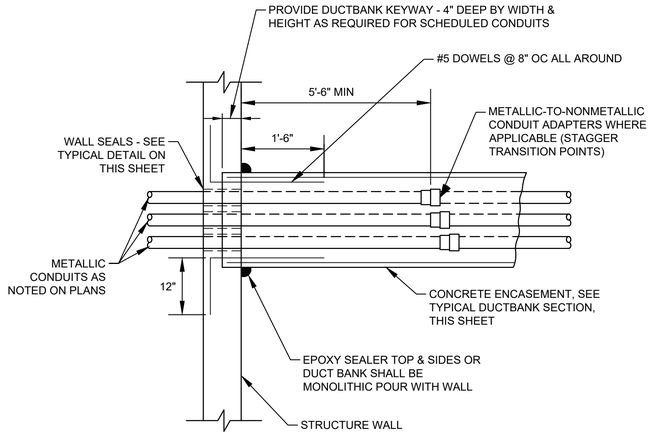

PLAN

TYPICAL DUCTBANK ENTRANCE AT STRUCTURE WALL

DETAIL 5 / NTS

NO.	DATE	REVISION	APP.

GAI
Gupta & Associates, Inc.
CONSULTING ENGINEERING
Registration No. F-2593
302 Dennis St.,
Houston, Texas 77006
Tel: 713-636-2936
Fax: 713-636-2987
email: hforouzan@gaiconsulting.com

ARCADIS
Infrastructure · Water · Environment · Buildings
1330 Post Oak Blvd, Suite 2250
Houston, TX 77056
Tel: 713-953-4800
Fax: 713-977-4620
www.arcadis.com
Texas Registered Engineering Firm F-533

SURVEYED BY: AMANI ENGR.
FB NO. P-6335

STATE OF TEXAS
H. A. FOROUZAN
77748
REGISTERED PROFESSIONAL ENGINEER
11/18/2025

CITY OF HOUSTON

HOUSTON PUBLIC WORKS

LIFT STATION REHABILITATION & RECONSTRUCTION CONSENT DECREE

ELECTRICAL – TYPICAL DETAILS I

D-32

WBS NUMBER	FOR CITY OF HOUSTON USE ONLY
R-000267-0175-4	
DRAWING SCALE	
NONE	
CITY OF HOUSTON PM	
NP NAWARAJ PANTA, P.E.	
SHEET NO. 277 OF 312	

FILE PATH: O:\H8103_Houston Lift Station Removal And Replacement (CMAR)\6 Drawings\Electrical\Working\Electrical Details\H8103_D-32.dwg
PLOT STYLE: GAI.ctb PLOTTED: 11/18/2025 6:48 PM

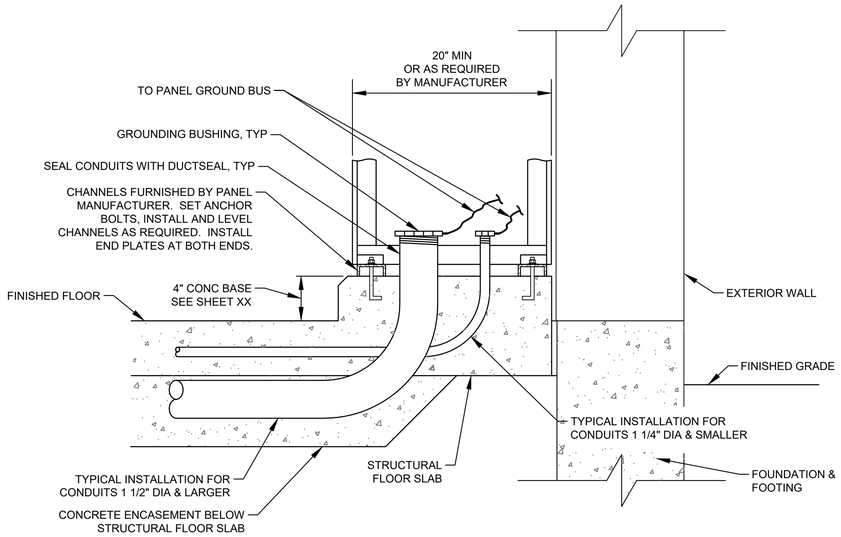

TYPICAL MCC & CONTROL PANEL INSTALLATION & CONDUIT ENTRY

DETAIL 6 / NTS -

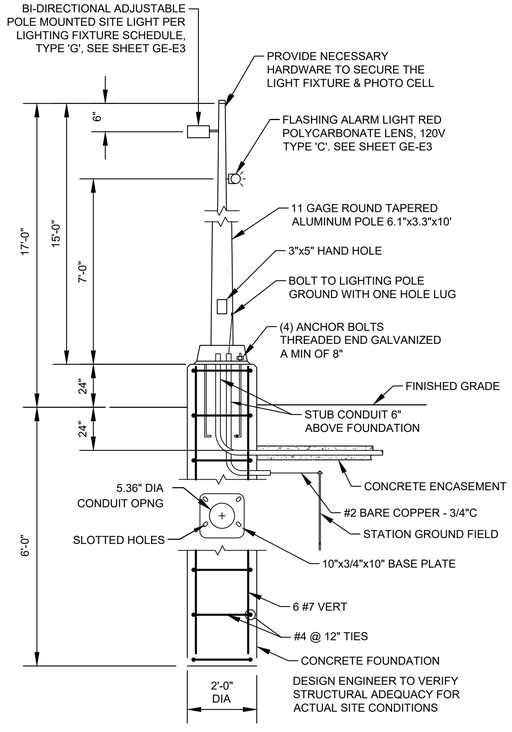

TYPICAL YARD LIGHT

DETAIL 7 / NTS -

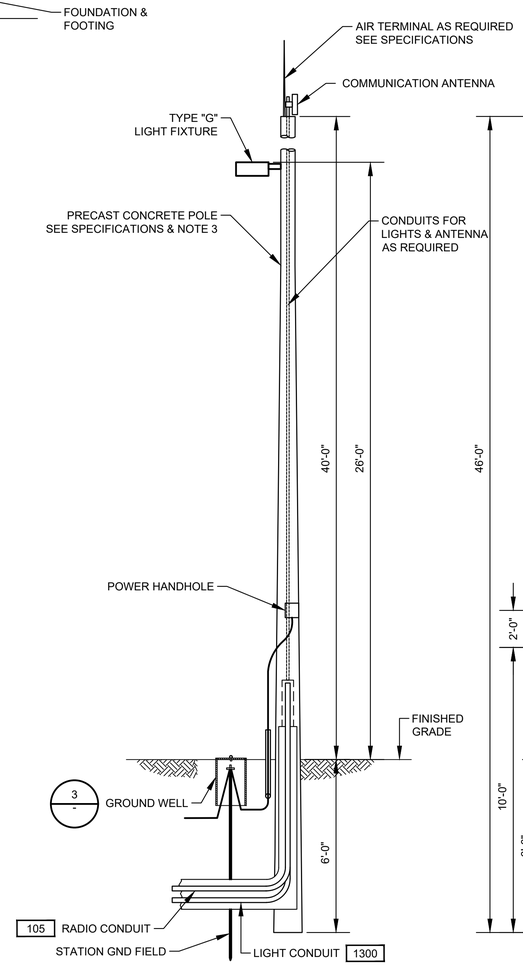

COMMUNICATION POLE MOUNTING DETAIL

DETAIL 8 / NTS -

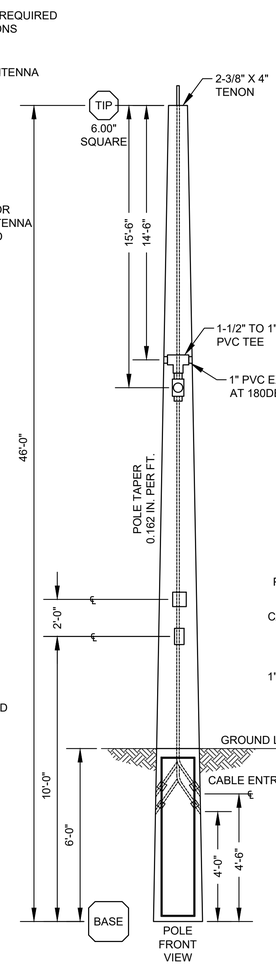

POLE FRONT VIEW

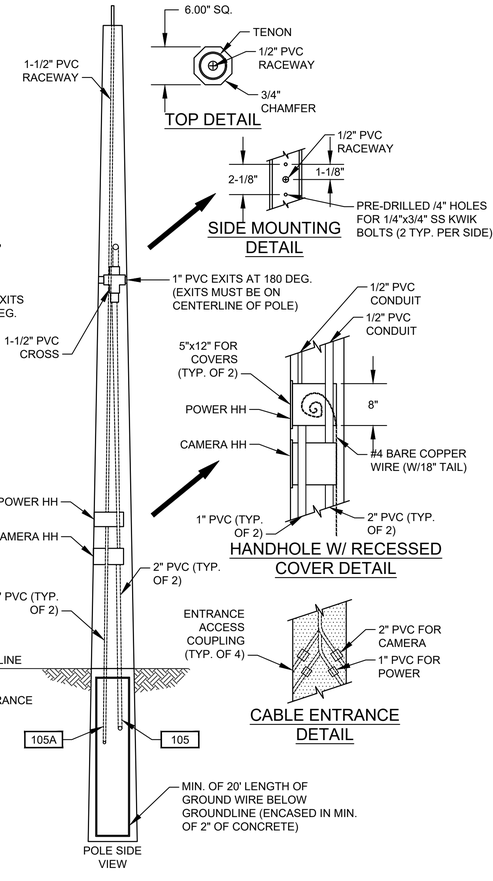

POLE SIDE VIEW

NOTES:

1. ON GROUND WIRE TERMINATION'S, ALL PAINTED OR COATED METAL SURFACES SHALL BE REMOVED AND CLEANED TO BARE METAL. TO OBTAIN A SOUND GROUND CONNECTION. ONCE INSTALLED APPLY PROTECTIVE COATING ON BARE METAL AREAS PER MANUFACTURERE REQUIREMENTS.
2. PRECAST CONCRETE POLE TO MOUNT THE RADIO RECEIVER.
3. 1" CONDUIT TO EXTEND TO THE TOP OF POLE FOR ETHERNET CABLE FOR RADIO.

GAI
Gupta & Associates, Inc.
CONSULTING ENGINEERING
Registration No. F-2593
302 Dennis St.
Houston, Texas 77006
Tel: 713-636-2936
Fax: 713-636-2987
email: hforouzan@gaiconsulting.com

ARCADIS
Infrastructure · Water · Environment · Buildings
1330 Post Oak Blvd, Suite 2250
Houston, TX 77056
Tel: 713-953-4800
Fax: 713-977-4620
www.arcadis.com
Texas Registered Engineering Firm F-533

SURVEYED BY: AMANI ENGR.
FB NO. P-6335

STATE OF TEXAS · H. A. FOROUZAN · 77748 · REGISTERED PROFESSIONAL ENGINEER
11/18/2025

CITY OF HOUSTON
HOUSTON PUBLIC WORKS

LIFT STATION REHABILITATION & RECONSTRUCTION CONSENT DECREE

ELECTRICAL – TYPICAL DETAILS–II

D–33

WBS NUMBER	FOR CITY OF HOUSTON USE ONLY
R–000267–0175–4	
DRAWING SCALE	
AS SHOWN	
CITY OF HOUSTON PM	
NP NAWARAJ PANTA, P.E.	
SHEET NO. 278 OF 312	

NO.	DATE	REVISION	APP.

FILE PATH: O:\H8103_Houston Lift Station Removal And Replacement (CMAR)\6 Drawings\Electrical\Working\Electrical Details\H8103_D-33.dwg
PLOT STYLE: GAI.ctb PLOTTED: 11/18/2025 6:48 PM

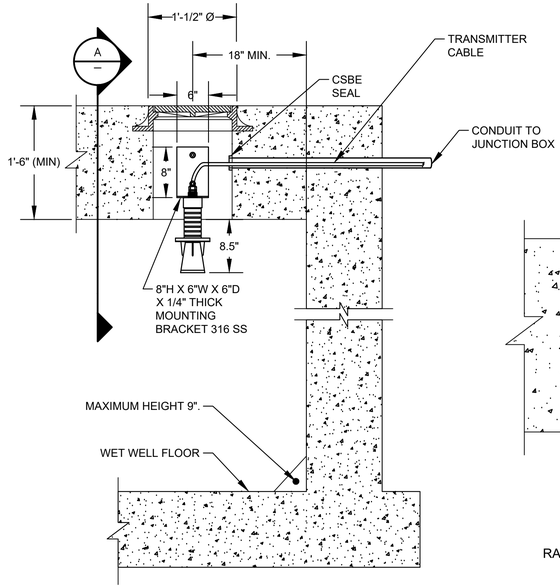

RADAR LEVEL TRANSMITTER MOUNTING
(TYP. LT-1, LT-2)

DETAIL 1
NTS
(SEE NOTE 1, 2, 4 & 5)

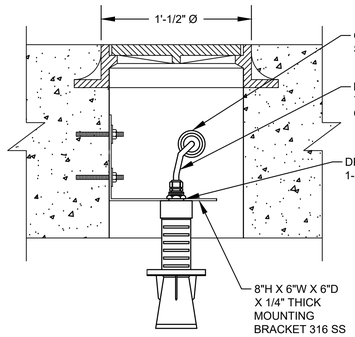

RADAR LEVEL TRANSMITTER MOUNTING
TYP. LT-1 & LT-2

SECTION A
NTS
(SEE NOTE 1, 2, 4 & 5)

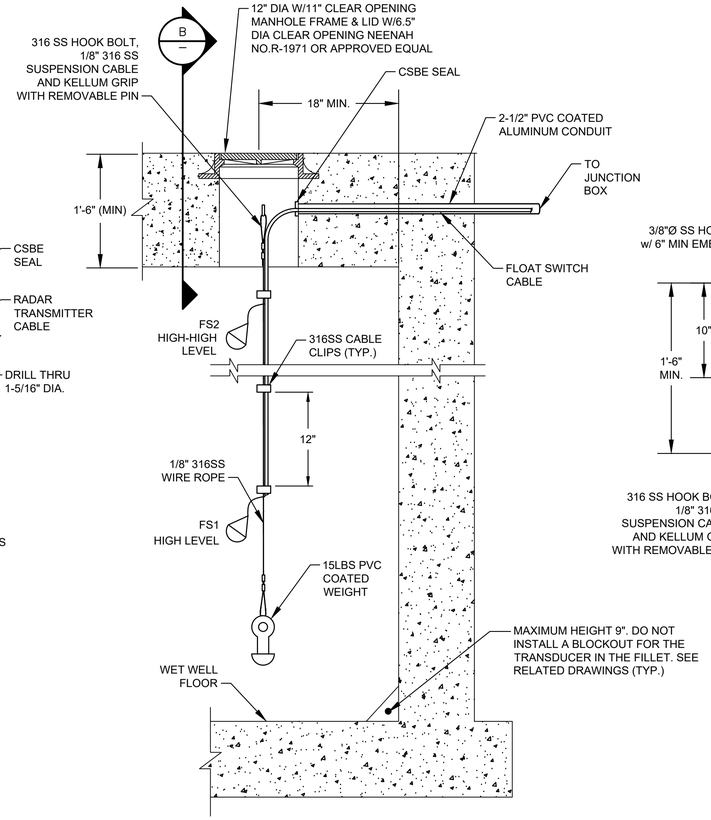

FLOAT SWITCH MOUNTING

DETAIL 2
NTS
(SEE NOTES 3, 4 & 5)

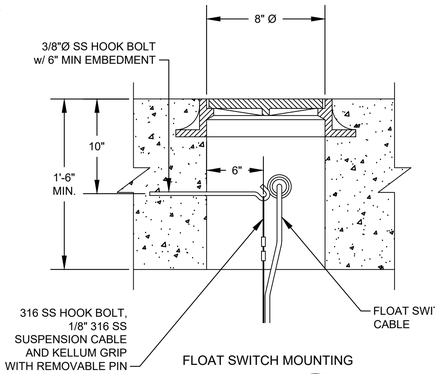

FLOAT SWITCH MOUNTING

SECTION B
NTS
(SEE NOTES 3, 4 & 5)

NOTES:

1. NEW RADAR LEVEL TRANSMITTERS FOR LT-1, LT-2.
2. NEW MANHOLES FOR RADAR LEVEL TRANSMITTERS LT-1, LT-2.
3. NEW MANHOLE FOR FLOAT SWITCHES.
4. PAINT MANHOLE LIDS AND HATCHES HUNTER GREEN.
5. NEW MANHOLE INSTALLATION.
6. RETROFIT MANHOLE INSTALLATION.

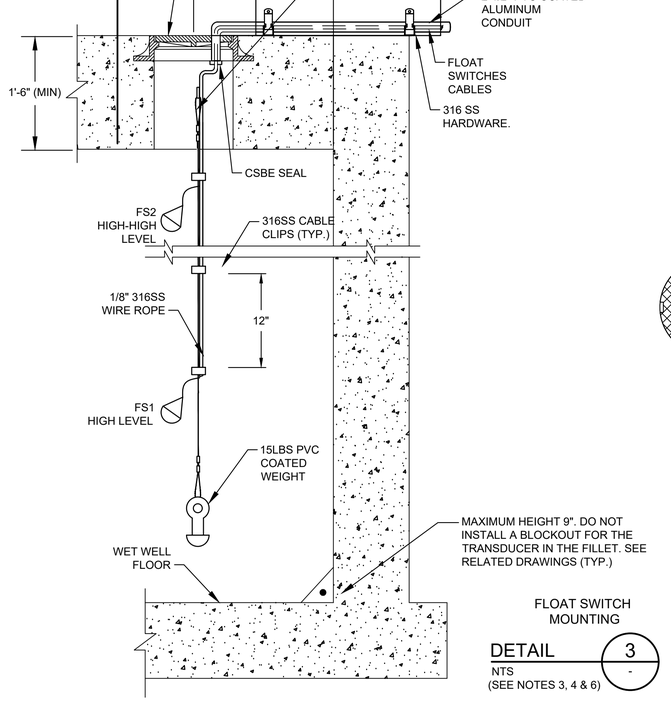

FLOAT SWITCH MOUNTING

DETAIL 3
NTS
(SEE NOTES 3, 4 & 6)

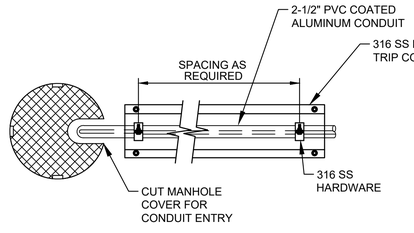

FLOAT SWITCH MOUNTING
TOP VIEW

DETAIL 4
NTS
(SEE NOTES 3, 4 & 6)

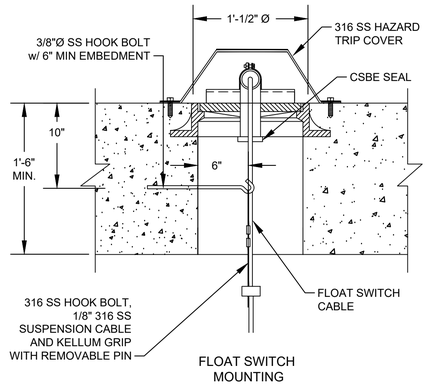

FLOAT SWITCH MOUNTING

SECTION C
NTS
(SEE NOTES 3, 4 & 6)

GAI
Gupta & Associates, Inc.
CONSULTING ENGINEERING
Registration No. F-2593
302 Dennis St.,
Houston, Texas 77006
Tel: 713-636-2936
Fax: 713-636-2987
email: hforouzan@gaiconsulting.com

ARCADIS
Infrastructure · Water · Environment · Buildings
1330 Post Oak Blvd, Suite 2250
Houston, TX 77056
Tel: 713-953-4800
Fax: 713-977-4620
www.arcadis.com
Texas Registered Engineering Firm F-533

SURVEYED BY: AMANI ENGR.
FB NO. P-6335

STATE OF TEXAS
H. A. FOROUZAN
77748
REGISTERED PROFESSIONAL ENGINEER
11/18/2025

CITY OF HOUSTON
HOUSTON PUBLIC WORKS

LIFT STATION REHABILITATION & RECONSTRUCTION
CONSENT DECREE

ELECTRICAL – RADAR LEVEL TRANSMITTER GAUGING SYSTEM INSTALLATION & DETAILS–I
D–34

WBS NUMBER	FOR CITY OF HOUSTON USE ONLY
R–000267–0175–4	
DRAWING SCALE	
AS SHOWN	
CITY OF HOUSTON PM	
NP NAWARAJ PANTA, P.E.	
SHEET NO. 279 OF 312	

NO.	DATE	REVISION	APP.

FILE PATH: O:\H8103_Houston Lift Station Removal And Replacement (CMAR)\6 Drawings\Electrical\Working\Electrical Details\H8103_D-34.dwg
PLOT STYLE: GAI.ctb PLOTTED: 11/18/2025 6:48 PM

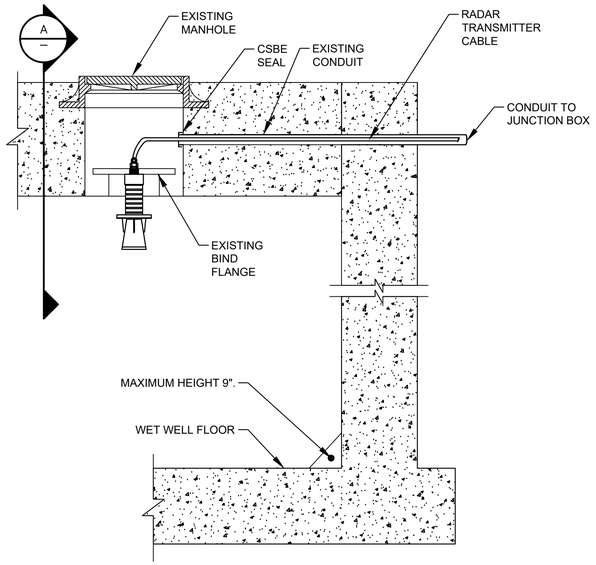

RADAR LEVEL TRANSMITTER MOUNTING
(TYP. LT-1, LT-2)

DETAIL 1
NTS

(SEE NOTES 1, 2, 4, 6 & 7)

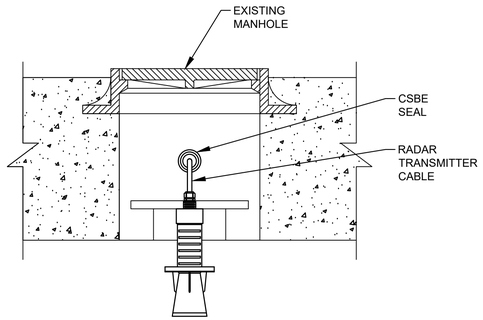

RADAR LEVEL TRANSMITTER MOUNTING
TYP. LT-1 & LT-2

SECTION A
NTS

(SEE NOTES 1, 2, 4, 6 & 7)

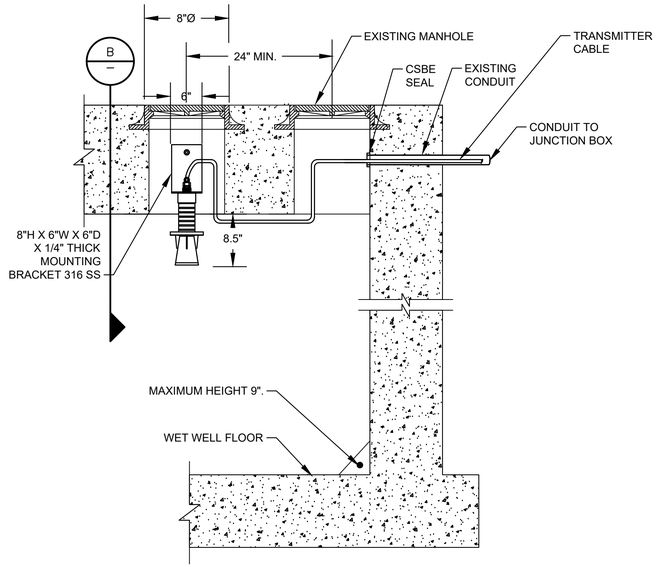

RADAR LEVEL TRANSMITTER MOUNTING
(TYP. LT-1, LT-2)

DETAIL 2
NTS

(SEE NOTES 1, 3, 4, 5, 6 & 8)

NOTES:

1. NEW RADAR LEVEL TRANSMITTERS FOR LT-1, LT-2.
2. EXISTING AIRCELL MANHOLES FOR RADAR LEVEL TRANSMITTERS LT-1, LT-2.
3. EXISTING SUBMERSIBLE TRANSDUCER MANHOLES FOR RADAR LEVEL TRANSMITTERS LT-1, LT-2.
4. PAINT MANHOLE LIDS AND HATCHES HUNTER GREEN.
5. NEW MANHOLE INSTALLATION.
6. RETROFIT MANHOLE INSTALLATION.
7. DEMOLISH ALL EQUIPMENT ASSOCIATED WITH AIRCELL INSIDE THE WETWELL.
8. DEMOLISH ALL EQUIPMENT ASSOCIATED WITH SUBMERSIBLE LEVEL TRANSDUCER INSIDE THE WETWELL.

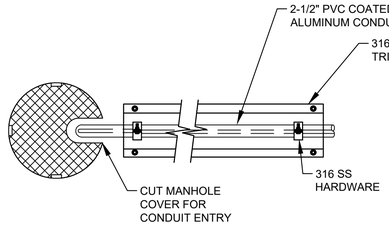

FLOAT SWITCH MOUNTING
TOP VIEW

DETAIL 4
NTS

(SEE NOTES 1, 4, 5 & 6)

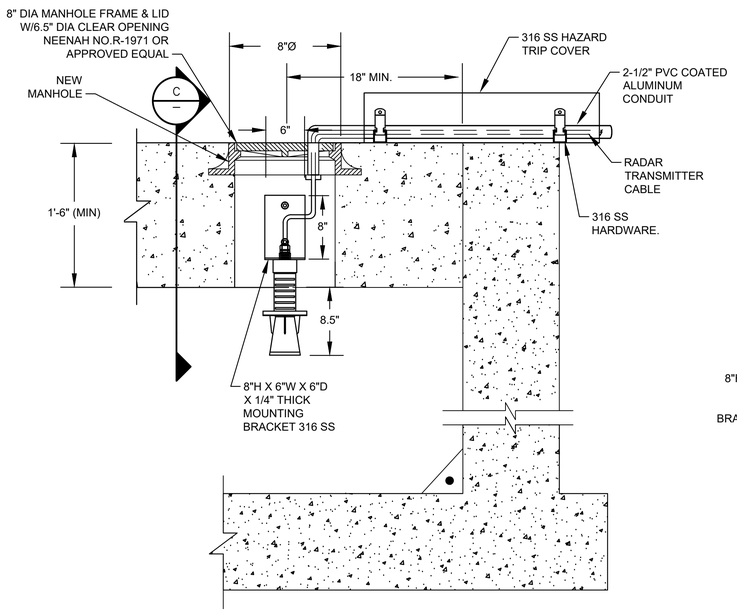

RADAR LEVEL TRANSMITTER MOUNTING
(TYP. LT-1, LT-2)

DETAIL 3
NTS

(SEE NOTES 1, 4, 5 & 6)

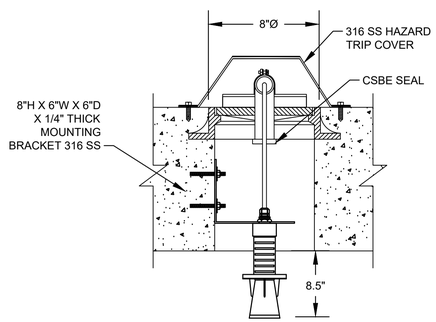

RADAR LEVEL TRANSMITTER MOUNTING
TYP. LT-1 & LT-2

SECTION C
NTS

(SEE NOTES 1, 4, 5 & 6)

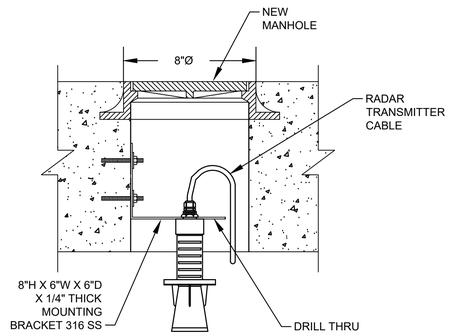

RADAR LEVEL TRANSMITTER MOUNTING
TYP. LT-1 & LT-2

SECTION B
NTS

(SEE NOTES 1, 3, 4, 5, 6 & 8)

NO.	DATE	REVISION	APP.

GAI
Gupta & Associates, Inc.
CONSULTING ENGINEERING
Registration No. F-2593
302 Dennis St.,
Houston, Texas 77006
Tel: 713-636-2936
Fax: 713-636-2987
email: hforouzan@gaiconsulting.com

ARCADIS
Infrastructure · Water · Environment · Buildings
1330 Post Oak Blvd, Suite 2250
Houston, TX 77056
Tel: 713-953-4800
Fax: 713-977-4620
www.arcadis.com
Texas Registered Engineering Firm F-533

STATE OF TEXAS
H. A. FOROUZAN
77748
REGISTERED PROFESSIONAL ENGINEER
11/18/2025

SURVEYED BY: AMANI ENGR.
FB NO. P-6335

CITY OF HOUSTON
HOUSTON PUBLIC WORKS

LIFT STATION REHABILITATION & RECONSTRUCTION
CONSENT DECREE

ELECTRICAL – RADAR LEVEL TRANSMITTER GAUGING SYSTEM INSTALLATION & DETAILS–II

D–35

WBS NUMBER	FOR CITY OF HOUSTON USE ONLY
R–000267–0175–4	
DRAWING SCALE	
AS SHOWN	
CITY OF HOUSTON PM	
NP NAWARAJ PANTA, P.E.	
SHEET NO. 280 OF 312	

FILE PATH: O:\H8103_Houston Lift Station Removal And Replacement (CMAR)\6 Drawings\Electrical\Working\Electrical Details\H8103_D-35.dwg
PLOT STYLE: GAI.ctb PLOTTED: 11/18/2025 6:48 PM

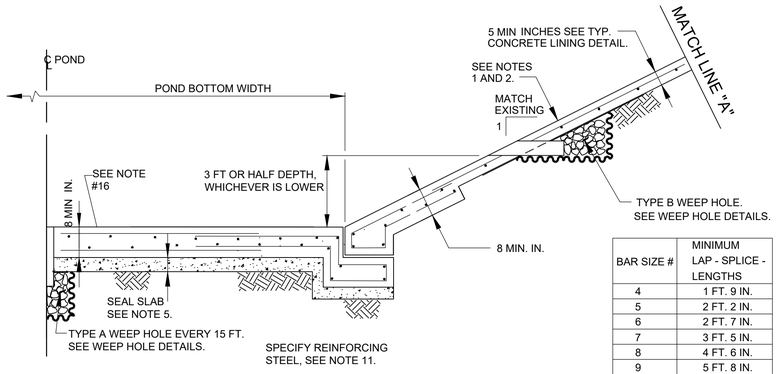

A HALF SECTION

TYPICAL BOTTOM LINING

BAR SIZE #	MINIMUM LAP - SPLICE - LENGTHS
4	1 FT. 9 IN.
5	2 FT. 2 IN.
6	2 FT. 7 IN.
7	3 FT. 5 IN.
8	4 FT. 6 IN.
9	5 FT. 8 IN.
10	7 FT. 3 IN.

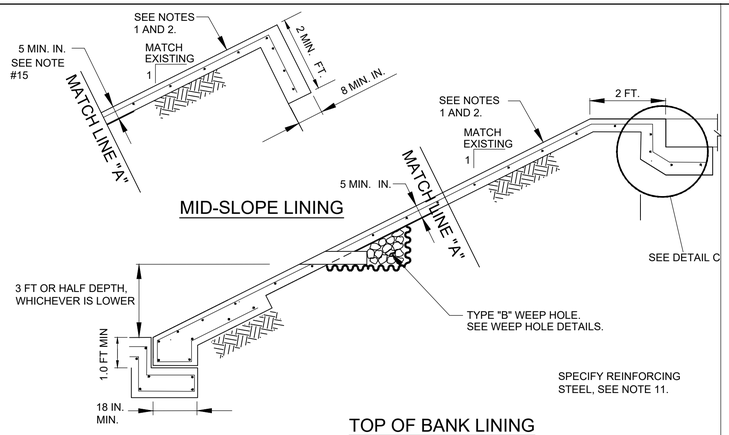

TYPICAL POND SLOPE LINING DETAIL

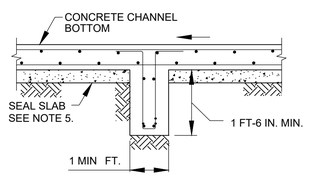

GRADE BEAM DETAIL

(SEE NOTE 6)

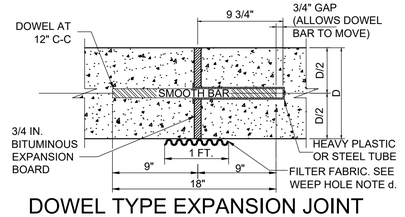

DOWEL TYPE EXPANSION JOINT

1. CENTER DOWEL HORIZONTALLY ON JOINT.
2. EXPANSION JOINT BARS SHALL BE HELD PARALLEL TO THE FINISHED CONCRETE SURFACE.

SMOOTH EXPANSION JOINT DOWELS

CONCRETE THICKNESS (D)	DOWEL DIA.
5" - 6"	3/4"
7" - 8"	1"
9" AND UP	1 1/4"

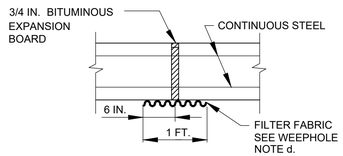

CONSTRUCTION JOINT

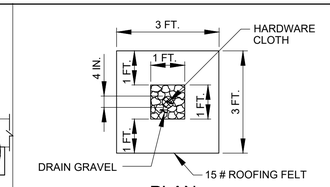

PLAN

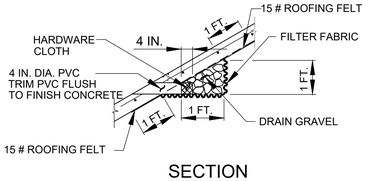

SECTION

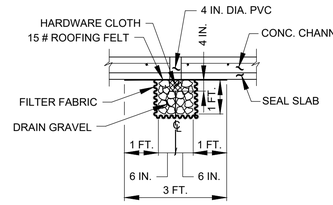

SECTION

TYPE "A" WEEP HOLE

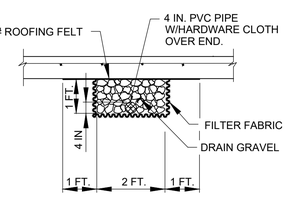

SECTION

TYPE "B" WEEP HOLE

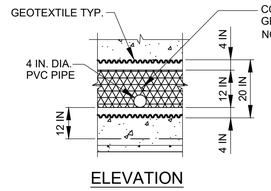

ELEVATION

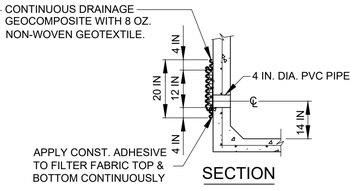

SECTION

TYPE "C" WEEP HOLE

WEEP HOLE NOTES:

1. MATERIALS:
   a. PIPE: 4 INCH DIA. SCH. 40 PVC
   b. DRAIN GRAVEL: SEE NOTE 14

SIEVE SIZE	% FINER
1 IN	100
3/4 IN	70 - 100
3/8 IN	20 - 90
NO. 4	0 - 60
NO. 8	0

   c. HARDWARE CLOTH: MIN. OPEN 1/8 IN, MAX. OPEN 1/4 IN
   d. FILTER FABRIC: NON-WOVEN GEOTEXTILE

MIN. AOS	SIEVE NO.	100 MIN
MAX. AOS	SIEVE NO.	70 MAX
WEIGHT	OZ/SY	6 0Z. MIN

2. CUT WEEP HOLE PIPE FLUSH WITH CONCRETE SURFACE.
3. TYPE "A" AND "C" WEEP HOLES FOR TYPICAL RECTANGULAR CONCRETE CHANNEL LINING. TO BE STAGGERED.

WEEP HOLE DETAILS

NOTES:

1. STRUCTURAL CONCRETE FOR CONCRETE LINING AND NONSTRUCTURAL CONCRETE FOR SEAL SLAB SHALL BE IN ACCORDANCE WITH SPECIFICATION SECTION NO. 03310 - STRUCTURAL CONCRETE.
2. REINFORCING STEEL SHALL BE IN ACCORDANCE WITH SPECIFICATION SECTION NO. 03310 - STRUCTURAL CONCRETE.
3. EXCAVATION AND BACKFILL FOR CONCRETE LINING SHALL BE IN ACCORDANCE WITH SPECIFICATION SECTION NO. 02316-EXCAVATIONS AND BACKFILL FOR STRUCTURES.
4. NOT USED.
5. A NON-REINFORCED 4 INCH MINIMUM NONSTRUCTURAL CONCRETE SEAL SLAB IS REQUIRED BENEATH THE BOTTOM OF CONCRETE POND.
6. STRUCTURAL CONCRETE GRADE BEAMS SHALL BE INSTALLED TRANSVERSELY AT 20 FOOT MAX. CENTERS ON CONCRETE LINED POND WITH BOTTOM WIDTHS EQUAL TO OR GREATER THAN 20 FEET.
7. JOINTS:
   A. PLACE CONSTRUCTION JOINT IN CONCRETE BOTTOM SECTIONS AND SLOPES AT 20 FOOT MIN., SPACING CONTINUOUSLY THROUGH LINING.
   B. PLACE EXPANSION JOINT IN CONCRETE BOTTOM SECTIONS, AND SLOPES AT 60 FOOT MAX. SPACING CONTINUOUSLY THROUGH LINING.
8. CEMENT STABILIZED SAND SHALL BE PROVIDED AND PLACED IN ACCORDANCE WITH SPECIFICATION SECTION NO. 02321 -CEMENT STABILIZED SAND.
9. DELETE 2 FT FLAT EDGE WHEN LINING IS BELOW TOP OF BANK.
10. NOT USED.
11. MINIMUM #4 BARS (GRADE 60) AT 12 INCHES ON CENTER EACH WAY.
12. VARIES BASED ON SIDE SLOPE.
13. FOR RCP OUTFALLS 48 INCHES DIA. AND LARGER, USE HEADWALL/WINGWALL DETAIL AS CALLED FOR ON PLANS.
14. FOR STRUCTURAL BACKFILL MATERIAL PER SPECIFICATION SECTION 02316. LIMESTONE AND RECYCLED CONCRETE NOT ALLOWED.
15. CONCRETE LINING PLACED ON BASIN SIDE SLOPES MAY BE 5 INCHES OR 6 INCHES IN THICKNESS.
16. CONCRETE LINING PLACED IN BASIN BOTTOMS MAY BE 8 INCHES, 10 INCHES OR 12 INCHES IN THICKNESS.

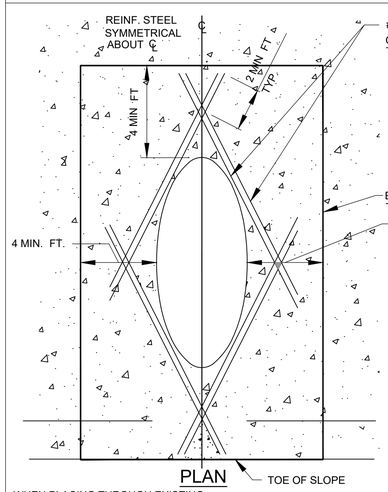

PLAN

WHEN PLACING THROUGH EXISTING CONCRETE LINING, SAW-CUT FULL DEPTH AND REMOVE 4 FEET ALL AROUND.

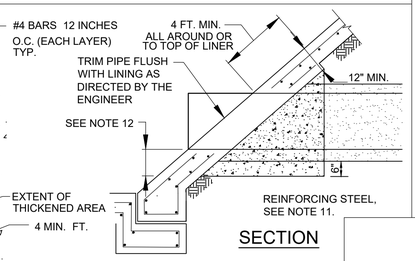

SECTION

PIPE OUTFALL DETAILS

(FOR RCP OUTFALLS 42 INCH DIA. AND LESS)

DETAIL C

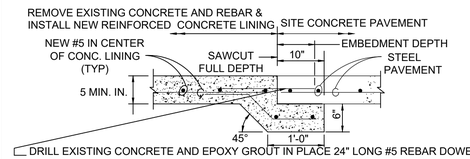

DRILL EXISTING CONCRETE AND EPOXY GROUT IN PLACE 24" LONG #5 REBAR DOWELS @ 18" O.C.; EMBEDMENT DEPTH SHALL BE AS PER EPOXY MANUFACTURER TO FULLY DEVELOP THE SIZE/GRADE REBAR. CONTRACTOR TO SUBMIT MANUFACTURER'S PRODUCT DATA FOR EPOXY GROUT PER SPECIFICATION SECTION No. 01330.

* USE #8 X 12" DOWELS @ 18" O.C. WITH 6" EMBEDMENT AND NO EPOXY @ EXPANSION JOINTS.
* USE EXPANSION JOINTS IN LIEU OF CONSTRUCTION JOINTS WHERE DIRECTED BY ENGINEER.

CONNECTION TO SITE CONCRETE PAVEMENT

ARCADIS
Infrastructure · Water · Environment · Buildings
1330 Post Oak Blvd, Suite 2250
Houston, TX 77056
Tel: 713-953-4800
Fax: 713-977-4620
www.arcadis.com
Texas Registered Engineering Firm F-533

SURVEYED BY: **AMANI ENGR.**
FB NO. P-6335

STATE OF TEXAS · DAVID F. RIDGWAY · 105134 · LICENSED PROFESSIONAL ENGINEER · 11/20/2025

CITY OF HOUSTON

HOUSTON PUBLIC WORKS

LIFT STATION REHABILITATION & RECONSTRUCTION CONSENT DECREE

CONCRETE LINED POND STANDARD DETAILS

D-36

WBS NUMBER	FOR CITY OF HOUSTON USE ONLY
R-000267-0175-4	
DRAWING SCALE	
AS NOTED	
CITY OF HOUSTON PM	
NP NAWARAJ PANTA, P.E.	
SHEET NO. 281 OF 312	

FILE PATH: C:\Users\omesson\DC\ACCDocs\Arcadis ACC US\AUS-30126616-Lift Station Rehab And Reconstruct CMAR\Project Files\10_WIP\10T Main PJ Folder\10T_Details\D-36_CONCRETE POND.dwg
PLOT STYLE: COH.ctb PLOTTED: 11/20/2025 7:45 AM

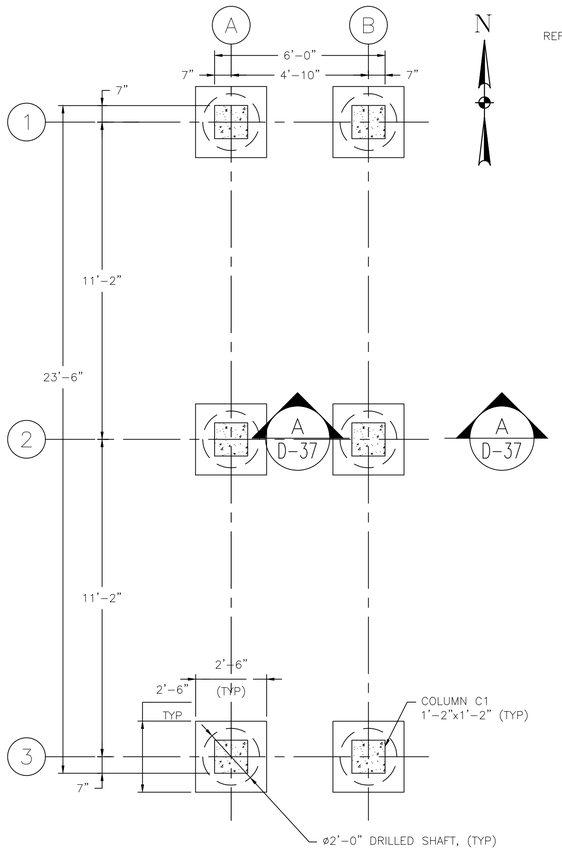

FOUNDATION PLAN @ EL 74.20

0 2' 4' 6' SCALE: 3/8"=1'-0"

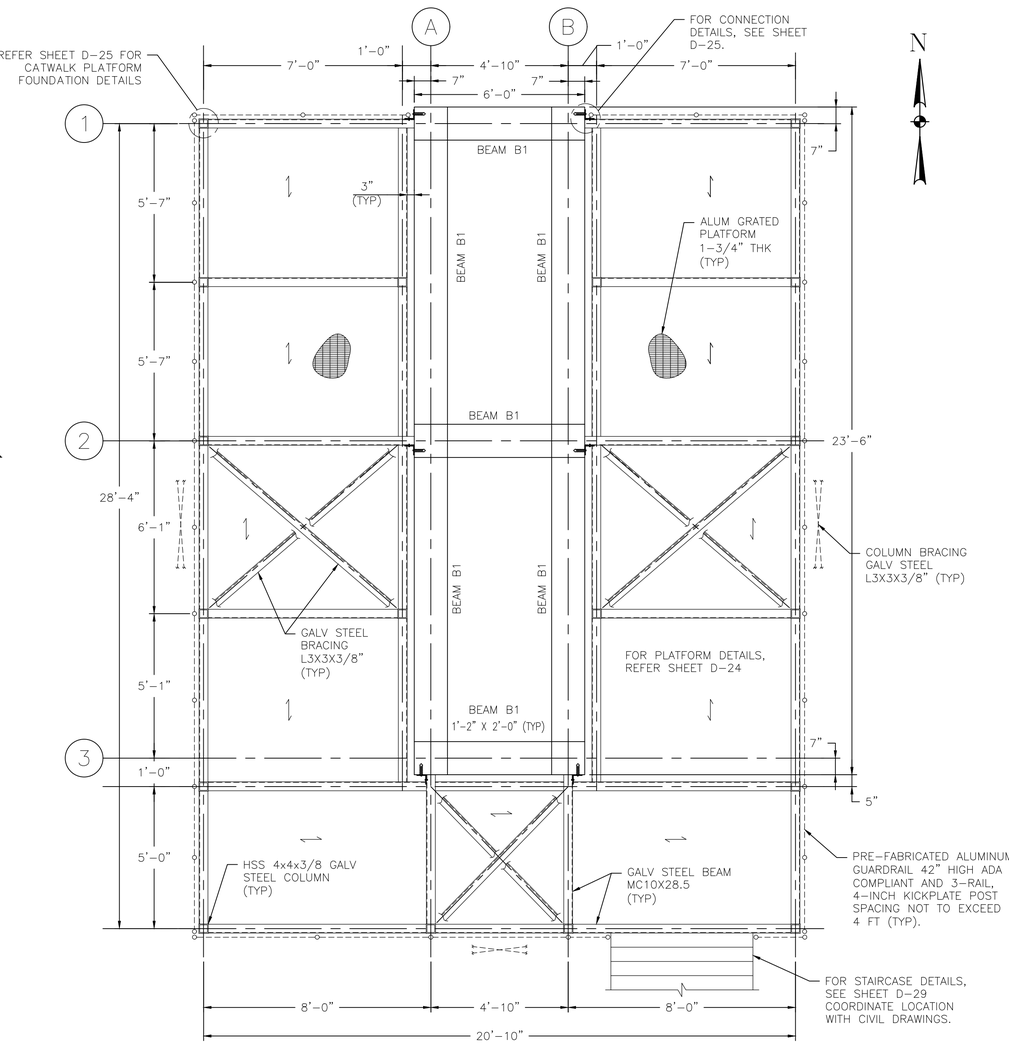

BEAM PLAN @ EL 79.24

0 2' 4' 6' SCALE: 3/8"=1'-0"

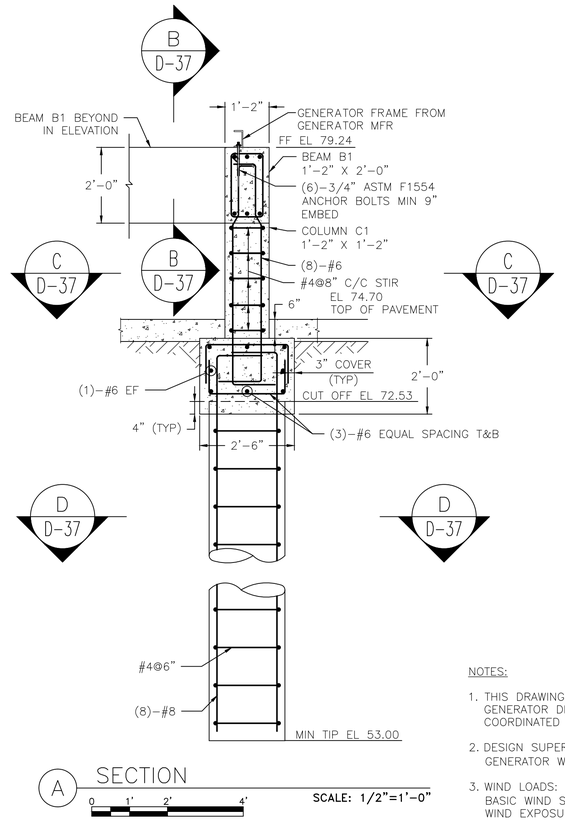

A SECTION

0 1' 2' 4' SCALE: 1/2"=1'-0"

NOTES:

1. THIS DRAWING IS BASED ON THE PROVIDED GENERATOR DIMENSIONS. FINAL DIMENSIONS TO BE COORDINATED WITH MANUFACTURER DRAWINGS.
2. DESIGN SUPERIMPOSED LOADS AS NOTED:
   GENERATOR WEIGHT (D) = 15,000 LBS
3. WIND LOADS:
   BASIC WIND SPEED (3-SEC GUST) (V): 150 MPH
   WIND EXPOSURE CATEGORY: C
4. SNOW LOADS:
   GROUND SNOW LOAD: 30 PSF
5. CONTRACTOR SHALL COORDINATE WITH THE GENERATOR MANUFACTURER REGARDING THE CONNECTION/ANCHORING OF THE GENERATOR TO THE CONCRETE SUPPORT STRUCTURE.
6. CONTRACTOR TO CONFIRM ANCHOR ROD LOCATION AND PROJECTIONS USING EQUIPMENT SHOP DRAWINGS.

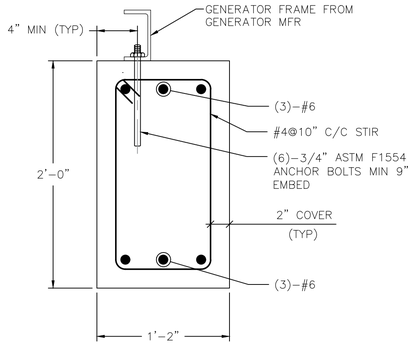

B SECTION (BEAM B1)

0 1' 2' SCALE: 1 1/2"=1'-0"

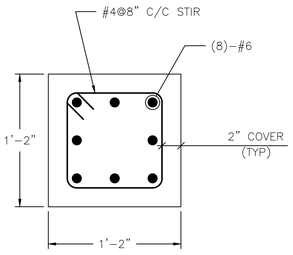

C SECTION (COLUMN C1)

0 1' 2' SCALE: 1 1/2"=1'-0"

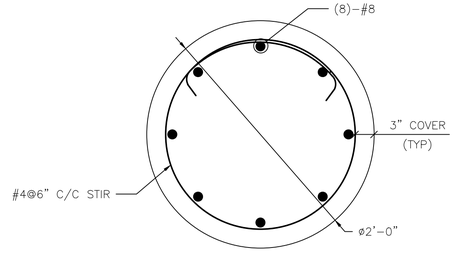

D DRILLED SHAFT SECTION

0 1' 2' SCALE: 1 1/2"=1'-0"

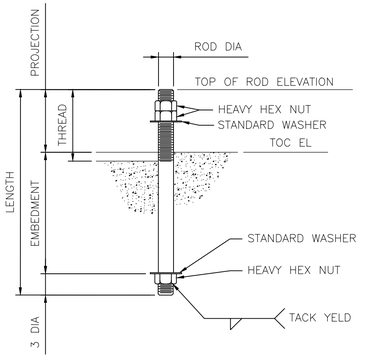

ANCHOR ROD DETAIL

0 2' 4' 8' SCALE: 1/4"=1'-0"

NO.	DATE	REVISION	APP.
01	01/16/26	100% SUBMITTAL	TH

ARCADIS
Infrastructure · Water · Environment · Buildings
1330 Post Oak Blvd, Suite 2250
Houston, TX 77056
Tel: 713-953-4800
Fax: 713-977-4620
www.arcadis.com
Texas Registered Engineering Firm F-533

SURVEYED BY: AMANI ENGR.
FB NO. P-6335

STATE OF TEXAS
TANVIR HOSSAIN
121767
LICENSED PROFESSIONAL ENGINEER

CITY OF HOUSTON

HOUSTON PUBLIC WORKS

LIFT STATION REHABILITATION & RECONSTRUCTION CONSENT DECREE

CHERRY OAK LIFT STATION GENERATOR FOUNDATION DETAILS

D-37

WBS NUMBER	FOR CITY OF HOUSTON USE ONLY
R-000267-0175-4	
DRAWING SCALE	
AS NOTED	
CITY OF HOUSTON PM	
NP NAWARAJ PANTA, P.E.	
SHEET NO. OF 312	

Any distribution, use or copying of this drawing or the information it contains by other than the intended recipient is unauthorized.
All content is property of IPEX USA LLC. or its parent and is protected by United States Copyright Laws.
The original drawing held by IPEX USA LLC. will supersede all other copies.

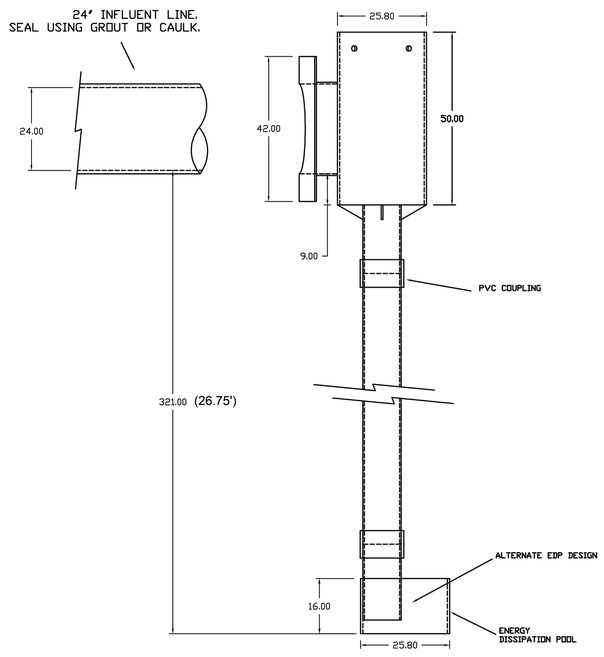

VORTEX APPROX. DRY WEIGHT: **650 LBS**

NAME	MATERIAL	PROPERTIES
VORTEX FORM	24" CIOD PVC PIPE AWWA C905	O.D. 25.8"
VORTEX SHAFT	10" CIOD PVC PIPE AWWA C900	O.D. 11.1"
VORTEX EDP	24" CIOD PVC PIPE AWWA C905	O.D. 25.8"

GRAVITY DESIGN

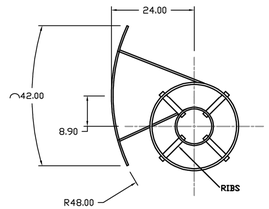

VORTEX DESIGNED FOR A PEAK FLOW OF: **1.8 MGD**

DIMENSIONS IN INCHES UNLESS OTHERWISE SPECIFIED

REV.	DATE	DESCRIPTION
A	07/11/25	CHANGED DROP HEIGHT

IPEX

CUSTOMER
CITY OF HOUSTON

VORTEX FLOW INSERT

DRAWING TITLE
SHADOW LAKES
HOUSTON, TX

DWG #	DATE	DRAWN BY	SCALE	SHEET	REV
TXKK122-1A	07/11/25	MDB	NTS	1/1	A

Typical Strapping Method

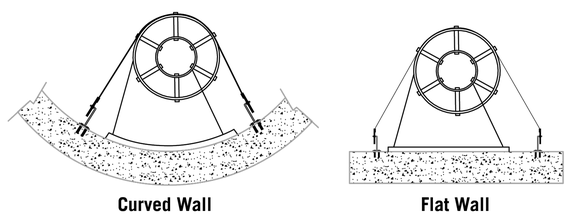

Curved Wall **Flat Wall**

Strapping Detail

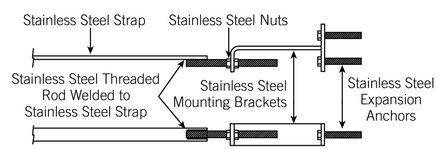

General Notes

1. Ensure that the inside manhole bottom is flat and will be able to receive the Energy Disipation Pool.
2. All hardware used as fasteners, anchors and supports shall be 316 stainless steel.
3. Vortex Flow Insert shall be as manufactured by:
IPEX
1425 North Service Rd. East, Unit 3
Oakville, Ontario, Canada L6H1A7
Vortex Specialist: 1–800–463–9572
corporate@ipexna.com
or approved equal.
4. Sealant used for entrance flange where 24" sanitary sewer enters the manhole shall be Sikaflex 1a – One Component, Polyurethane, or approved equal.
5. Vortex Flow Insert vertical drop shaft shall use PVC coupling connections with flexible
sleeves at intermediate wall supports.
6. The following table is a guideline to strapping & anchoring the Vortex Flow Insert:

STRAPPING & ANCHORING			
Top Form (in)	**Shaft Dia (in)**	**Min Strap Area (sq in)**	**Anchor Pull-out (lb-ft) w/FOS=2.5**
60 or less	24	0.0052	500
76	30	0.0084	700
80	36	0.0230	1800
96	42	0.0315	2500

7. The Energy Dissipation Pool (EDP) can be directly bolted to the floor of the manhole using stainless steel anchor bolts & large flat washers.
8. Contractor shall verify all dimensions prior to ordering Vortex Flow Insert and receive engineer approval of proposed strapping & anchoring methods.

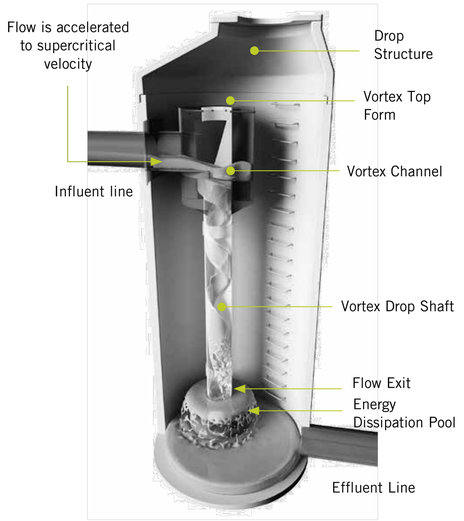

Vortex Top Form

The top portion or headworks of the Vortex Flow Insert. Components of the Top Form include the entrance piece, the deflection plate, the Vortex Channel and the Vortex Top Cut.

Drop Structure

The structure in which the Vortex Flow Insert will be installed.

Deflection Plate

The angled plate at the inlet that directs the flow into the Vortex Flow Channel.

Entrance Piece

The Entrance Piece is designed to accommodate the inlet pipe. It will be a flanged channel large enough to accept the influent line. See the design engineers specifications to determine how the entrance piece and the inlet line are to be connected.

Vortex Drop Shaft

The Vortex Drop Shaft is the vertical pipe in which the sewage spirals down. The shaft may come in more than one piece and will have a slip coupling or flange as a means of assembling the shaft.

Vortex Channel

The channel that directs the flow at the Vortex Top Form entrance to the Vortex Top Cut.

Energy Dissipation Pool

The Energy Dissipation Pool is where the sewage is mixed and exits the Vortex Flow Insert.

NO	DATE	REVISION	APPROVED

NOTICE:
FOR YOUR SAFETY, YOU ARE REQUIRED BY TEXAS LAW TO CALL 811 AT LEAST 48 HOURS BEFORE YOU DIG SO THAT UNDERGROUND LINES CAN BE MARKED. THIS SIGNATURE DOES NOT FULFILL YOUR OBLIGATION TO CALL 811

VERIFICATION OF PRIVATE UTILITY LINES

N/A
Date

CenterPoint Energy natural gas utilities shown. (Gas service lines are not shown). This signature not be used for conflict verification.
Signature valid for six months.

N/A
Date

CenterPoint Energy/UNDERGROUND Electrical Facilities Verification ONLY.
(This signature verifies existing underground facilities – not to be used for conflict verification)
Signature valid for six months.

Date

Approved for AT&T underground conduit facilities only.
Signature valid for one year.

EJES INCORPORATED
Corporate Office
12801 North Central Expressway, Suite 700
Dallas, Texas 75243
(P) 214-343-1210
(F) 214-343-3885

Houston Office
6161 Savoy Drive, Suite 820
Houston, Tx. 77036
(P) 281-272-1612
(F) 281-272-1619

EJES, Inc. Copyright © 2017
FIRM REGISTRATION No. 2488

SURVEYED BY: AMANI ENGR.
FB NO. P–6335

THIS DOCUMENT IS RELEASED FOR THE PURPOSE OF REVIEW UNDER THE AUTHORITY OF TANITA GILBERT–BAKER, P.E. 88719 ON FEBRUARY 2025. IT IS NOT TO BE USED FOR CONSTRUCTION PURPOSES.

CITY OF HOUSTON
HOUSTON PUBLIC WORKS

LIFT STATION REHABILITATION & RECONSTRUCTION CONSENT DECREE

VORTEX MANHOLE DETAILS
SHADOWBRAIR DR.

D–38

WBS NUMBER	FOR CITY OF HOUSTON USE ONLY
R–000267–0175–4	
DRAWING SCALE	
AS NOTED	
CITY OF HOUSTON PM	
NP NAWARAJ PANTA, P.E.	
SHEET NO. 283 OF 312	

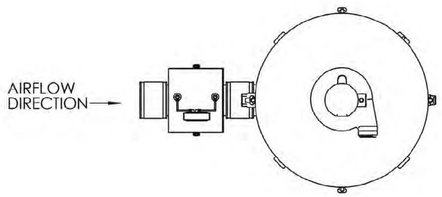

TOP VIEW

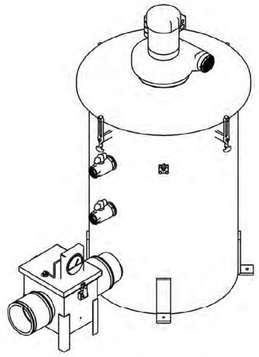

ISOMETRIC VIEW

DRUM SCRUBBER MODEL	AIRFLOW (CFM)	MEDIA #1 QTY (CUFT)	MEDIA #2 QTY (CUFT)	L1	W1	H1	H2
DS-100	100	3	2	49"	22"	6"	54"
DS-300	300	7	3	59"	31"	9"	67"
DS-500	500	12	5	76"	42"	10"	67"
DS-1000	1,000	26	13	90"	52"	18"	83"

NOTES:

SEE CATALOGUE PAGE #7 FOR ADDITIONAL UNIT OPTIONS AND FEATURES

STANDARD PUREAIR FILTRATION MODELS AND DIMENSIONS ARE LISTED; HOWEVER, DIMENSIONS CAN BE CUSTOMIZED TO MEET SPACE AND OTHER REQUIREMETNS. DISCUSS WITH SALES OR ENGINEERING TEAM

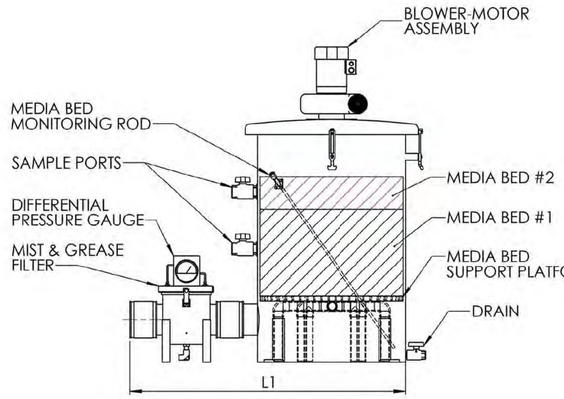

ELEVATION VIEW

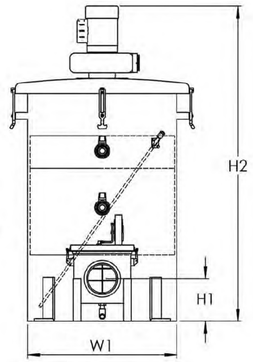

INLET VIEW

	NAME	DATE
DRAWN	AML	8/9/2018
CHECKED		
ENG APPR.		

PROPRIETARY AND CONFIDENTIAL

THE INFORMATION CONTAINED IN THIS DRAWING IS THE SOLE PROPERTY OF PUREAIR FILTRATION. ANY REPRODUCTION IN PART OR AS A WHOLE WITHOUT THE WRITTEN PERMISSION OF PUREAIR FILTRATION IS PROHIBITED.

TITLE: DRUM SCRUBBER SYSTEM ASSEMBLY

SIZE	DWG. NO.	REV
B	DS-1000	
NOT TO SCALE		SHEET 1 OF 1

DS-1000

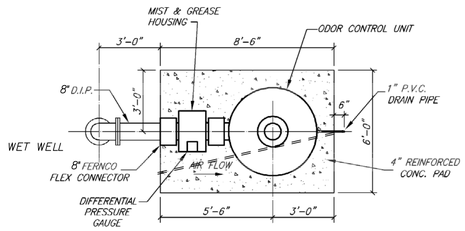

ODOR CONTROL UNIT PLAN

NTS

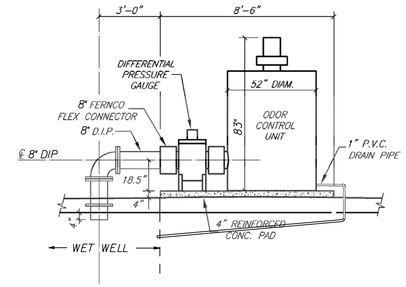

ODOR CONTROL UNIT SECTION

NTS

DS MODEL #	AIR FLOW RANGE CMH (CFM)	MOTOR RANGE kW (HP)	MEDIA VOLUME M^3 (FT^3)*	Shipping Weight KG (LBS)	Operating Weight KG (LBS)
100	85 - 170 (50 - 100)	0.37 (.5)	0.14 (5)	79 (175)	156 (345)
300	170 - 510 (100 - 300)	0.56 (.75)	0.25 (10)	120 (270)	350 (770)
500	510 - 850 (300 - 500)	1.1 (1.5)	0.42 (17)	200 (440)	485 (1,070)
1000	850 - 1,700 (500 - 1,000)	1.8 (2.5)	1.1 (39)	272 (600)	921 (2,030)

** Special Airflows Available*

NO	DATE	REVISION	APPROVED

NOTICE:
FOR YOUR SAFETY, YOU ARE REQUIRED BY TEXAS LAW TO CALL 811 AT LEAST 48 HOURS BEFORE YOU DIG SO THAT UNDERGROUND LINES CAN BE MARKED. THIS SIGNATURE DOES NOT FULFILL YOUR OBLIGATION TO CALL 811

VERIFICATION OF PRIVATE UTILITY LINES

Date

CenterPoint Energy natural gas utilities shown. (Gas service lines are not shown). This signature not be used for conflict verification.

Signature valid for six months.

Date

CenterPoint Energy/UNDERGROUND Electrical Facilities Verification ONLY.
(This signature verifies existing underground facilities – not to be used for conflict verification)

Signature valid for six months.

Date

Approved for AT&T underground conduit facilities only.
Signature valid for one year.

EJES
INCORPORATED
Corporate Office
12801 North Central Expressway, Suite 700
Dallas, Tex. 75243
(P) 214-343-1210
(F) 214-343-3885
Houston Office
8181 Stacy Drive, Suite 830
Houston, Tx. 77036
(P) 281-272-1612
(F) 281-272-1619
EJES, Inc. Copyright © 2017
FIRM REGISTRATION No. 2488

SURVEYED BY: AMANI ENGR.
FB NO. P-6335

STATE OF TEXAS
TANITA GILBERT ALEXANDER
88719
LICENSED
PROFESSIONAL ENGINEER
3-20-26

CITY OF HOUSTON
HOUSTON PUBLIC WORKS

LIFT STATION REHABILITATION & RECONSTRUCTION CONSENT DECREE

ODOR CONTROL SYSTEM DETAILS
ANNUNCIATION LIFT STATION

D-39

WBS NUMBER	FOR CITY OF HOUSTON USE ONLY
R-000267-0175-4	
DRAWING SCALE	
CITY OF HOUSTON PM	
NP NAWARAJ PANTA, P.E.	
SHEET NO. 284 OF 312	

SPECIFICATIONS:

Applications	Wastewater odor removal
Airflow Range	0 CMH (0 CFM) – 1,700 CMH (1,000 CFM) **Please review the model selection table for more information*
Configuration	Vertical airflow
Construction Material	**Standard:** High-density polyethylene (HDPE) **Other options:** Stainless Steel, Fiberglass reinforced plastic
Particulate Filtration	**Odor Control Applications:** Mist and Grease Filter **Other Applications:** 5 cm (2 in), 30% MERV 8 Prefilter, 15 cm (6 in), 95% MERV 13 Final Filter **Other filter sizes/options available*
Blower Configuration	**DRAWTHRU: Standard Design:** Enables the blower to operate in clean air, increasing its lifespan and reducing maintenance needs. **Redundant blowers and other special options available*
Customizable	Multiple sizes and configurations available. Reference the model selection table for details. Add-on accessories like sound enclosures are available. *PureAir specializes in customization.*

BENEFITS:

- **Low Maintenance:** Simple replacement and disposal of spent media.
- **Multiple Media Beds:** Offers flexibility for multiple chemisorbant media. For details, refer to the media brochure.

MEDIA BED INDICATOR:

This unit includes a metal media bed indicator installed at an angle within the system, aligned against the airflow to monitor media life.

- **Corrosion Alert:** A dark, corroded color on the indicator signal *expired media*. When corrosion reaches halfway, contact PureAir to replace the media and maintain optimal system performance.
- **LIFEGARD™:** For real-time updates on media lifespan, consider the LIFEGARD™ as a system upgrade.

General Notes

Basic components of the Odor Control Unit shall consist of the following:
* High Density Polyethylene Drum With Lid
* 1430 lbs of Dry Scrubbing Media
* Cast Aluminum Direct Drive Blower Sections
The Unit shall be a DS Model No. 1000 as manufactured by PureAir Filtration LLC, or approved equal

Drum
1. Drum shall be 52" in diameter and 60" in height
2. Drum material shall be linear, high density polyethylene (1/4" Thickness)
3. Fasteners shall be stainless steel
4. The inlet shall have an 8" FERNCO flexible coupling attached to a high efficiency mist & grease filter.
5. Drum shall be equipped with a drain line
6. Unit shall be mounted to a 4" reinforced concrete pad

Blower Section
1. Blower shall be capable off delivering 1000 cfm
2. The motor shall be: 2.5 hp, 3450 rpm, 230/460v/3 Phase/60 Hz TEFC Motor

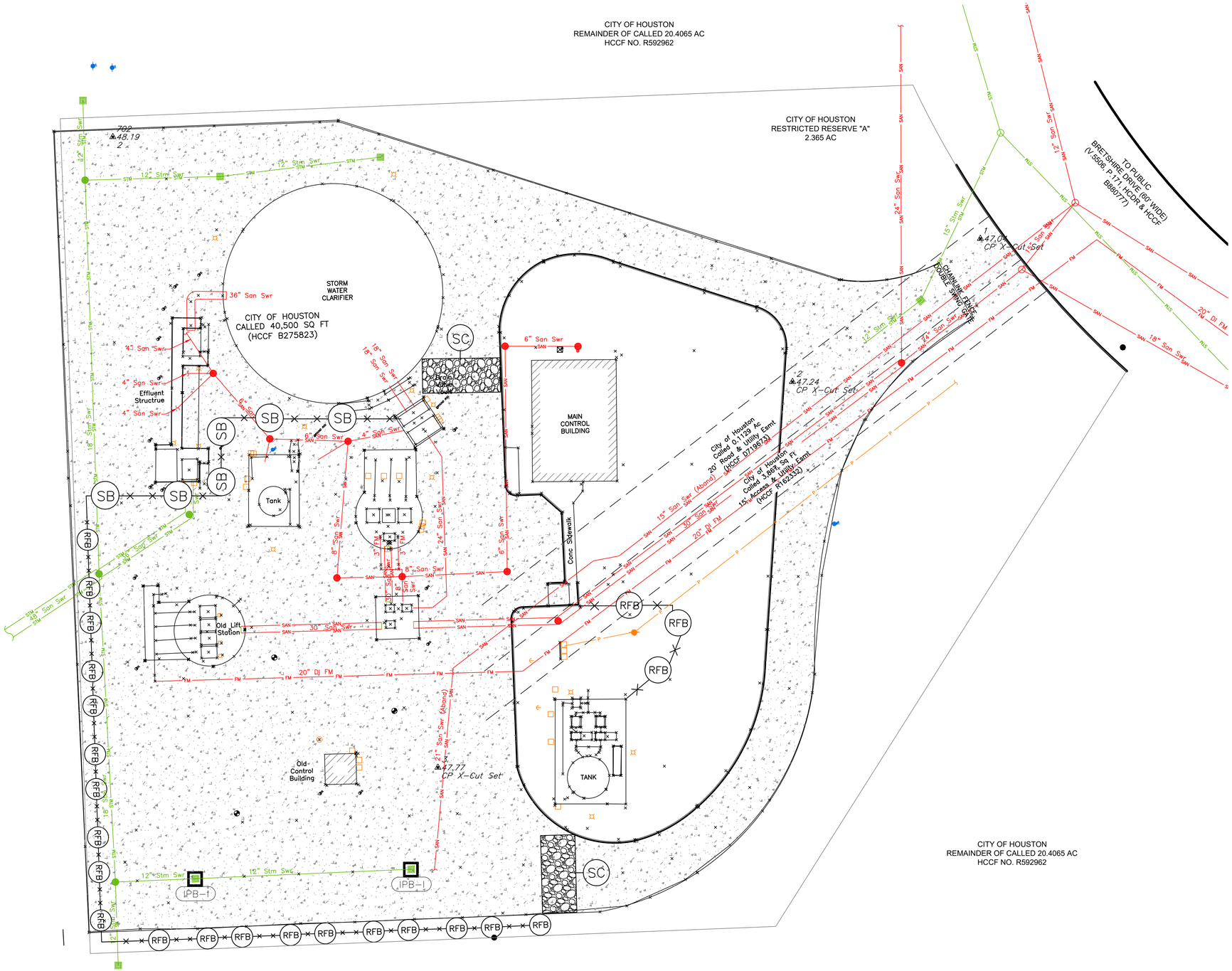

N

HORIZ. 0' 10' 20' 40'

1"=20'

BENCHMARK:

STATIC GPS OBSERVATION MADE ON CITY OF HOUSTON MONUMENT XXXX-XXXX 08/05/2024. A BRASS DISK LOCATED ON THE SOUTH SIDE OF BRIDGE ON PARKER ROAD, APPROXIMATELY 640 FEET SOUTHWEST OF BRETSHIRE ROAD INTERSECTION ELEVATION = 48.92' (NAVD 88 GEOID 18)

100 YEAR BFE = 48.5 FEET (NAVD 88, 2001 ADJ)

500 YEAR BFE = 50.9 FEET (NAVD 88, 2001 ADJ)

NOTES:

1. CONTRACTOR TO RESTORE SITE TO PRECONSTRUCTION CONDITION.

LEGEND:

RFB	REINFORCED FILTER FABRIC BARRIER
IPB-I	INLET PROTECTION BARRIER FOR STAGE I
IPB-II	INLET PROTECTION BARRIER FOR STAGE II
SC	STABILIZED CONSTRUCTION ACCESS
SB	SANDBAG BARRIER

ARCADIS
Infrastructure · Water · Environment · Buildings
1330 Post Oak Blvd, Suite 2250
Houston, TX 77056
Tel: 713-953-4800
Fax: 713-977-4620
www.arcadis.com
Texas Registered Engineering Firm F-533

SURVEYED BY: AMANI ENGR.
FB NO. P-6335

STATE OF TEXAS
DAVID F. RIDGWAY
105134
LICENSED
PROFESSIONAL ENGINEER
11/21/2025

CITY OF HOUSTON

HOUSTON PUBLIC WORKS

LIFT STATION REHABILITATION & RECONSTRUCTION CONSENT DECREE

BRETSHIRE #1 LIFT STATION

SWPPP-1

WBS NUMBER	FOR CITY OF HOUSTON USE ONLY
R-000267-0175-4	
DRAWING SCALE	
AS NOTED	
CITY OF HOUSTON PM	
NP NAWARAJ PANTA, P.E.	
SHEET NO. 285 OF 312	

FILE PATH: C:\Users\omessan\DC\ACCDocs\Arcadis ACC US\AUS-30126616-Lift Station Rehab And Reconstruct CMAR\Project Files\10_WIP\10T Main PJ Folder\10T_Swpp\SWPPP-1_BRETSHIRE #1.dwg
PLOT STYLE: COH.ctb PLOTTED: 11/21/2025 8:12 AM

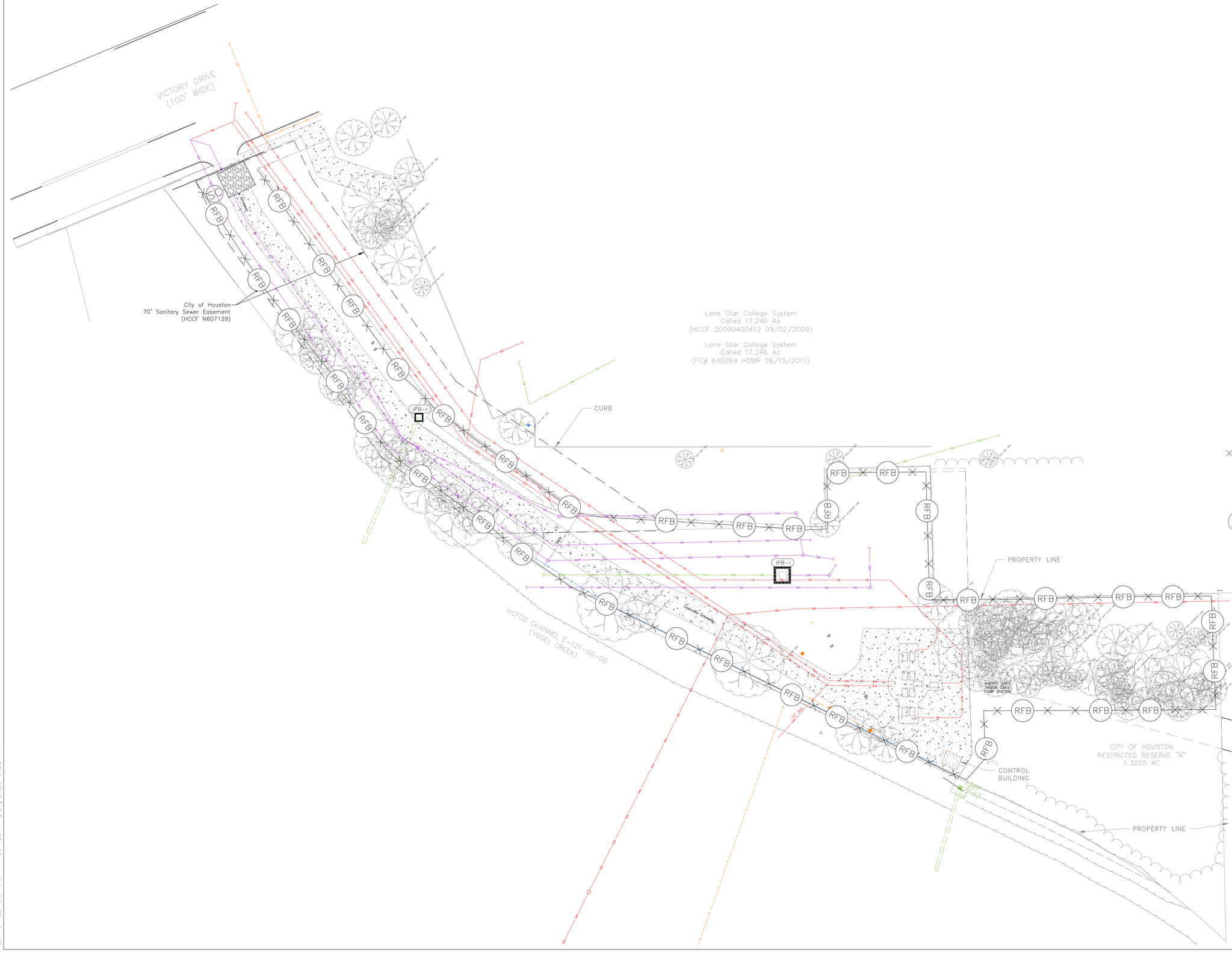

N

HORIZ. 0' 15' 30' 60'

1"=30'

BENCHMARK:

STATIC GPS OBSERVATION MADE ON CITY OF HOUSTON MONUMENT XXXX-XXXX 08/05/2024. A BRASS DISK LOCATED ON THE SOUTH SIDE OF BRIDGE ON PARKER ROAD, APPROXIMATELY 640 FEET SOUTHWEST OF BRETSHIRE ROAD INTERSECTION
ELEVATION = 48.92' (NAVD 88 GEOID 18)

100 YEAR BFE = 48.5 FEET (NAVD 88, 2001 ADJ)

500 YEAR BFE = 50.9 FEET (NAVD 88, 2001 ADJ)

NOTES:

1. CONTRACTOR TO RESTORE SITE TO PRECONSTRUCTION CONDITION

LEGEND:

RFB	REINFORCED FILTER FABRIC BARRIER
IPB-I	INLET PROTECTION BARRIER FOR STAGE I
IPB-II	INLET PROTECTION BARRIER FOR STAGE II
SC	STABILIZED CONSTRUCTION ACCESS
RFD	ROCK FILTER DAM

ARCADIS
Infrastructure · Water · Environment · Buildings
1330 Post Oak Blvd, Suite 2250
Houston, TX 77056
Tel: 713-953-4800
Fax: 713-977-4620
www.arcadis.com
Texas Registered Engineering Firm F-533

SURVEYED BY: AMANI ENGR.
FB NO. P-6335

STATE OF TEXAS
DAVID F. RIDGWAY
105134
LICENSED
PROFESSIONAL ENGINEER
11/21/2025

CITY OF HOUSTON

HOUSTON PUBLIC WORKS

LIFT STATION REHABILITATION & RECONSTRUCTION CONSENT DECREE

CHERRY OAK LIFT STATION SWPPP-2

WBS NUMBER	FOR CITY OF HOUSTON USE ONLY
R-000267-0175-4	
DRAWING SCALE	
AS NOTED	
CITY OF HOUSTON PM	
NP NAWARAJ PANTA, P.E.	
SHEET NO. 286 OF 312	

FILE PATH: C:\Users\omessan\DC\ACCDocs\Arcadis ACC US\AUS-30126616-Lift Station Rehab And Reconstruct CMAR\Project Files\10_WIP\10T Main PJ Folder\10T_Swpp\SWPPP-2_CHERRY OAK.dwg
PLOT STYLE: COH.ctb PLOTTED: 11/21/2025 8:22 AM

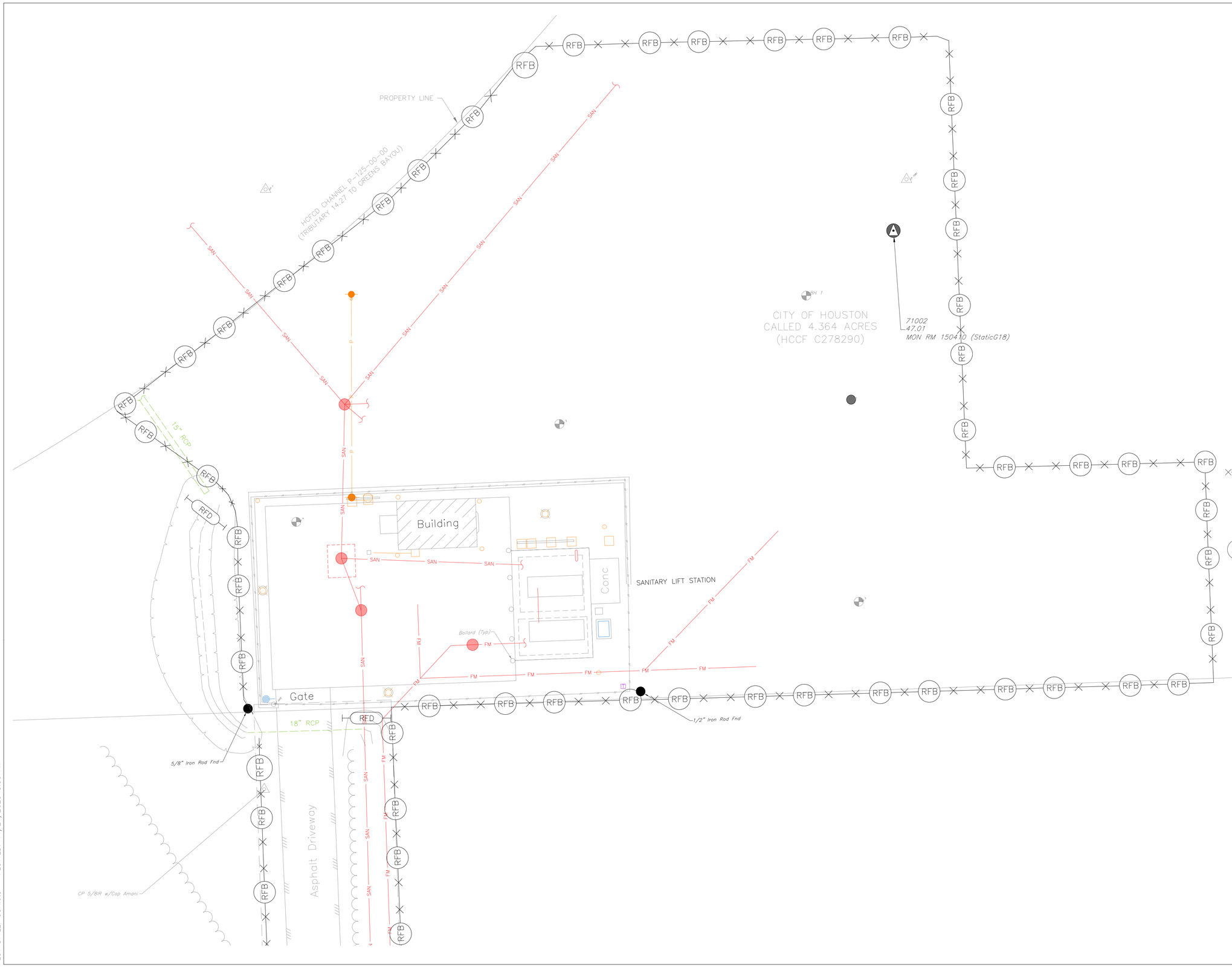

N

HORIZ. 0' 5' 10' 20'
1"=10'

NO.	DATE	REVISION	APP.

BENCHMARK:

STATIC GPS OBSERVATION MADE ON CITY OF HOUSTON MONUMENT 5662-8303 08/14/2024.
A STEEL PIN LOCATED ABOUT 80 FEET NORTHEAST OF LIFT STATION AT SITE.
ELEVATION = 47.01' (NAVD 88 GEOID 18)

100 YEAR BFE = 45.1 FEET (NAVD 88, 2001 ADJ)

500 YEAR BFE = 46.9 FEET (NAVD 88, 2001 ADJ)

NOTES:

1. CONTRACTOR TO RESTORE SITE TO PRECONSTRUCTION CONDITION

LEGEND:

RFB	REINFORCED FILTER FABRIC BARRIER
IPB-I	INLET PROTECTION BARRIER FOR STAGE I
IPB-II	INLET PROTECTION BARRIER FOR STAGE II
SC	STABILIZED CONSTRUCTION ACCESS
RFD	ROCK FILTER DAM

ARCADIS
Infrastructure · Water · Environment · Buildings
1330 Post Oak Blvd, Suite 2250
Houston, TX 77056
Tel: 713-953-4800
Fax: 713-977-4620
www.arcadis.com
Texas Registered Engineering Firm F-533

SURVEYED BY: AMANI ENGR.
FB NO. P-6335

STATE OF TEXAS
DAVID F. RIDGWAY
105134
LICENSED
PROFESSIONAL ENGINEER
11/21/2025

CITY OF HOUSTON

HOUSTON PUBLIC WORKS

LIFT STATION REHABILITATION & RECONSTRUCTION CONSENT DECREE

RED GULLY LIFT STATION

SWPPP-3

WBS NUMBER	FOR CITY OF HOUSTON USE ONLY
R-000267-0175-4	
DRAWING SCALE	
AS NOTED	
CITY OF HOUSTON PM	
NP NAWARAJ PANTA, P.E.	
SHEET NO. 287 OF 312	

FILE PATH: C:\Users\omessan\DC\ACCDocs\Arcadis ACC US\AUS-30126616-Lift Station Rehab And Reconstruct CMAR\Project Files\10_WIP\10T Main PJ Folder\10T_Swpp\SWPPP-3_RED GULLY.dwg
PLOT STYLE: COH.ctb PLOTTED: 11/21/2025 8:30 AM

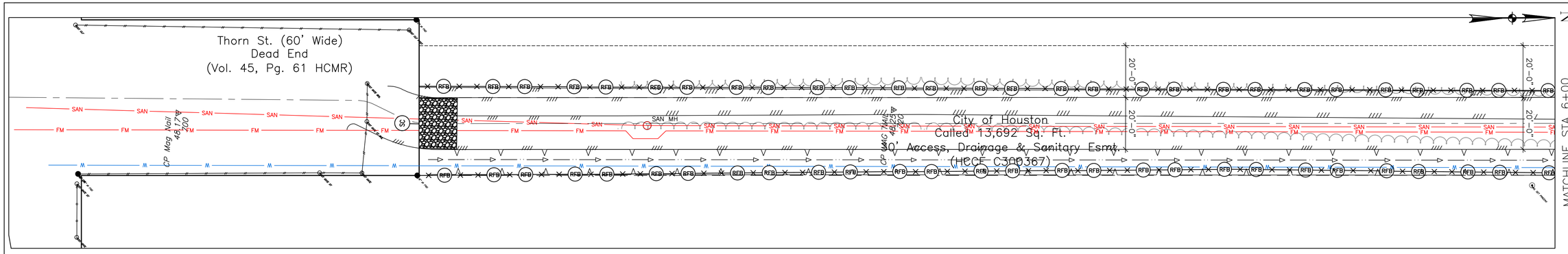

0' 10' 20' 40'
HORIZONTAL SCALE: 1"=20'

0' 1' 2' 4'
VERTICAL SCALE: 1"=2'

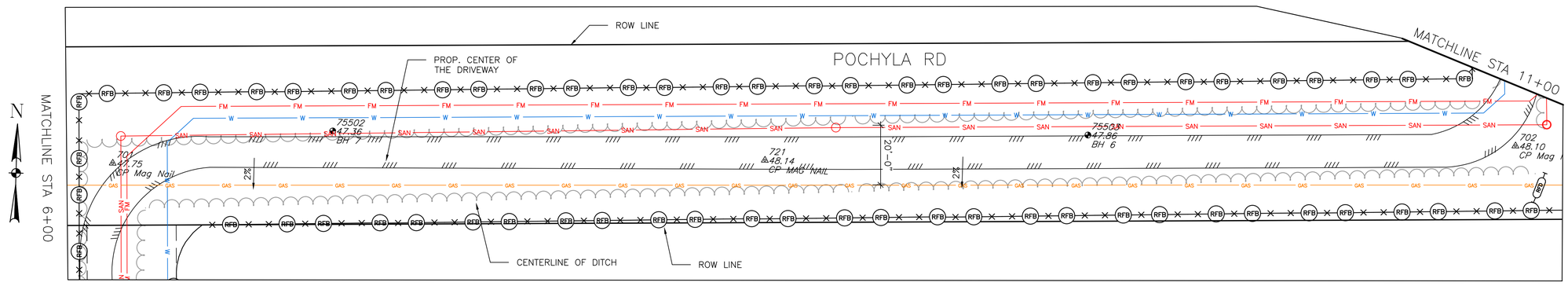

LEGEND:

- RFB — REINFORCED FILTER FABRIC BARRIER
- IPB-I — INLET PROTECTION BARRIER FOR STAGE I
- IPB-II — INLET PROTECTION BARRIER FOR STAGE II
- SC — STABILIZED CONSTRUCTION ACCESS
- RFD — ROCK FILTER DAM

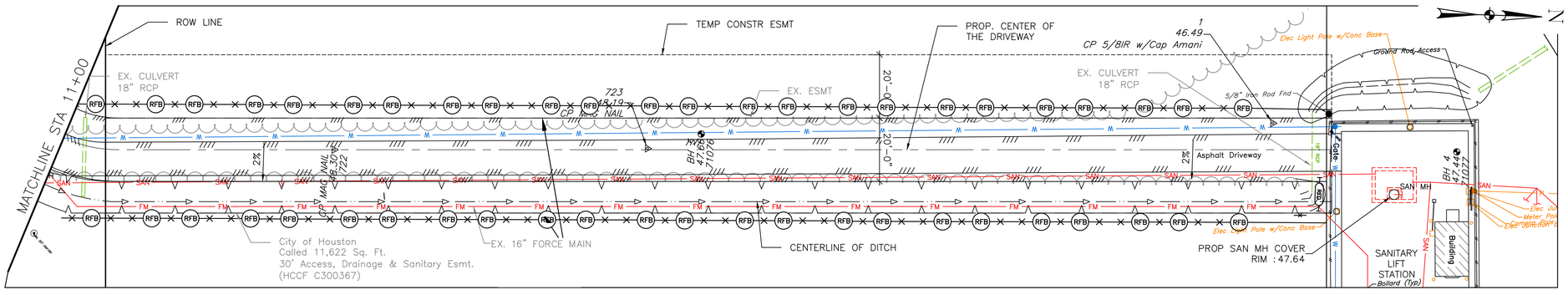

ARCADIS
Infrastructure · Water · Environment · Buildings
1330 Post Oak Blvd, Suite 2250
Houston, TX 77056
Tel: 713-953-4800
Fax: 713-977-4620
www.arcadis.com
Texas Registered Engineering Firm F-533

SURVEYED BY: AMANI ENGR.
FB NO. P-6335

STATE OF TEXAS
DAVID F. RIDGWAY
105134
LICENSED
PROFESSIONAL ENGINEER
01/26/2026

CITY OF HOUSTON
HOUSTON PUBLIC WORKS

LIFT STATION REHABILITATION & RECONSTRUCTION
CONSENT DECREE

RED GULLY LIFT STATION
SWPPP-4

WBS NUMBER	FOR CITY OF HOUSTON USE ONLY
R-000267-0175-4	
DRAWING SCALE	
AS NOTED	
CITY OF HOUSTON PM	
NP NAWARAJ PANTA, P.E.	
SHEET NO. 288 OF 312	

FILE PATH: C:\Users\omessan\DC\ACCDocs\Arcadis ACC US\AUS-30126616-Lift Station Rehab And Reconstruct CMAR\Project Files\10_WIP\10T Main PJ Folder\10T_Swpp\SWPPP-4_RED GULLY DRIVEWAY.dwg
PLOT STYLE: COH.ctb PLOTTED: 2/12/2026 10:43 AM

CITY OF HOUSTON
TRACT 10C, BLOCK 12
HOUSTON SUBURBAN HEIGHTS
6920 ANNUNCIATION ST.

CENTERPOINT ENERGY
TRACT 10B-2, BLOCK 12
6881 ANNUNCIATION

MELMAR INDUSTRIES, LLC
TRACT 11A, BLOCK 12
7002 FURAY RD.

Wet Well Cover Top
Rim El.= 60.83
Depth = 23.95
Bottom=22.83 Per Record
FL 24"(S)=29.43 Per Record

3
59.56
CP X-Cut

10" Plug Valve (Typ)

Air & Vacuum Valve (Typ)

70506
59.51
BH 2

70559
59.57
BH 2

Control Building

Abandoned 24" San Swr

3/4" Water Line

24" San Swr

70505
59.30
BH 1

70558
59.36
BH 1

Concrete
Pavement
Driveway
Parking

12" RCP

Asphalt
Driveway

24" San Swr

10" San Swr

16" San Force Main
(Located Per Record)

ANNUNCIATION DRIVE

N

HORIZ. 0' 5' 10' 20'
1"=10'

NO.	DATE	REVISION	APP.

BENCHMARK:

STATIC GPS OBSERVATION MADE ON CITY OF HOUSTON MONUMENT 5563-8402 MADE ON 08/01/2024. A BRASS DISK LOCATED ON THE WEST SIDE OF BRIDGE ON SUBURBAN STREET, APPROXIMATELY 0.24 MILE SOUTH OF MT. HOUSTON ROAD INTERSECTION ELEVATION = 63.96' (NAVD 88 GEOID 18)

100 YEAR BFE = 62.3 FEET (NAVD 88, 2001 ADJ)

500 YEAR BFE = 63 FEET (NAVD 88, 2001 ADJ)

NOTES:

1. CONTRACTOR TO RESTORE SITE TO PRECONSTRUCTION CONDITION

LEGEND:

- RFB — REINFORCED FILTER FABRIC BARRIER
- IPB-I — INLET PROTECTION BARRIER FOR STAGE I
- IPB-II — INLET PROTECTION BARRIER FOR STAGE II
- SC — STABILIZED CONSTRUCTION ACCESS
- RFD — ROCK FILTER DAM

ARCADIS
Infrastructure · Water · Environment · Buildings
1330 Post Oak Blvd, Suite 2250
Houston, TX 77056
Tel: 713-953-4800
Fax: 713-977-4620
www.arcadis.com
Texas Registered Engineering Firm F-533

SURVEYED BY: AMANI ENGR.
FB NO. P-6335

STATE OF TEXAS
DAVID F. RIDGWAY
105134
LICENSED
PROFESSIONAL ENGINEER
01/26/2026

CITY OF HOUSTON
HOUSTON PUBLIC WORKS

LIFT STATION REHABILITATION & RECONSTRUCTION CONSENT DECREE

ANNUNCIATION LIFT STATION
SWPPP-5

WBS NUMBER	FOR CITY OF HOUSTON USE ONLY
R-000267-0175-4	
DRAWING SCALE	
AS NOTED	
CITY OF HOUSTON PM	
NP NAWARAJ PANTA, P.E.	
SHEET NO. 289 OF 312	

FILE PATH: C:\Users\omessan\DC\ACCDocs\Arcadis ACC US\AUS-30126616-Lift Station Rehab And Reconstruct CMAR\Project Files\10_WIP\10T Main PJ Folder\10T_Swpp\SWPPP-5_ANNUNCIATION.dwg
PLOT STYLE: COH.ctb PLOTTED: 2/12/2026 10:22 AM

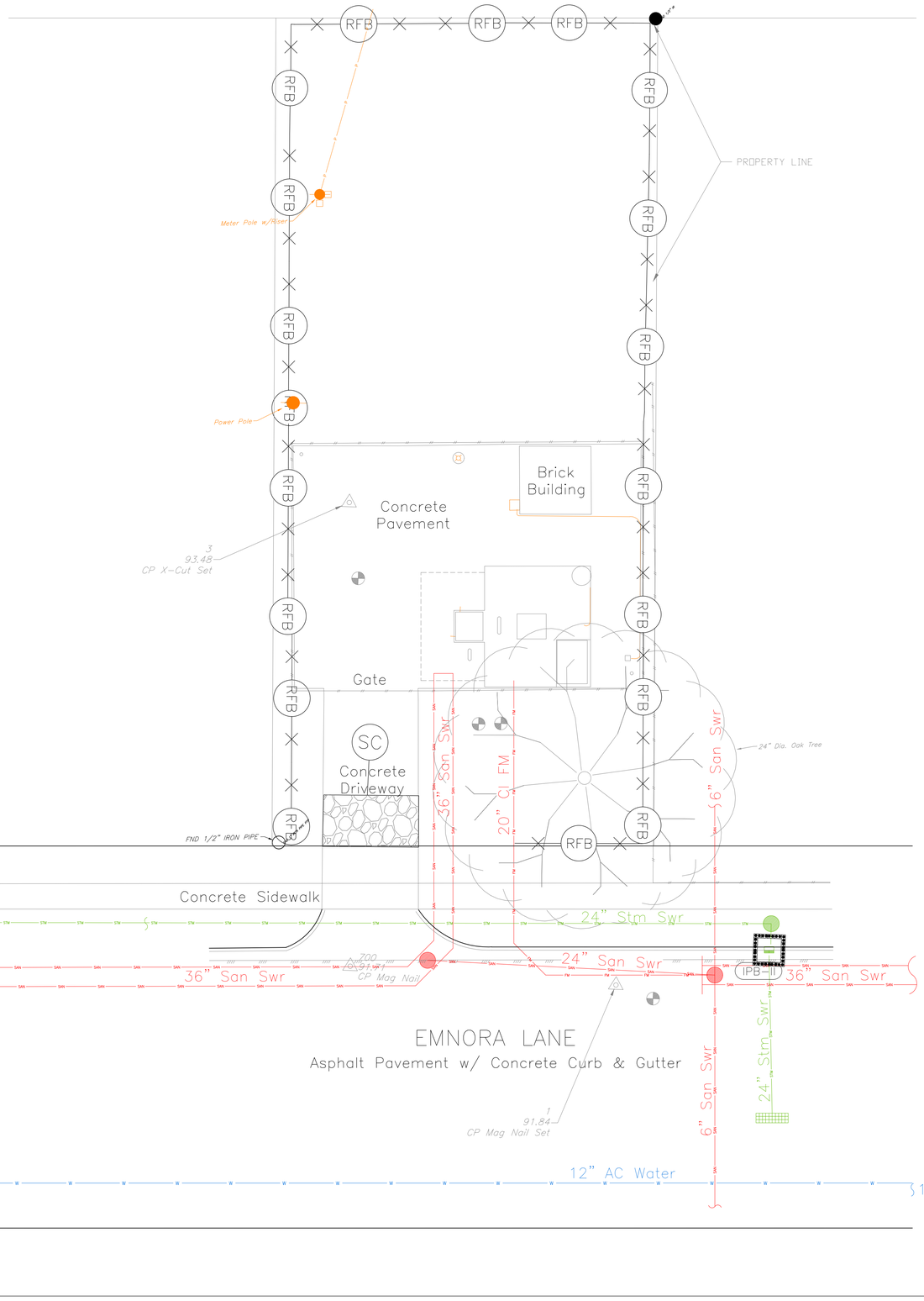

N

0' 5' 10' 20'

SCALE: 1"=10'

BENCHMARK:

STATIC GPS OBSERVATION MADE ON CITY OF HOUSTON MONUMENT 4959-7512 MADE ON 07/30/2024. A BRASS DISK LOCATED ON THE SOUTHEAST OF EMNORA LANE AND AGAR LANE. ELEVATION = 91.48' (NAVD 88 GEOID 18)

NOTES:

1. CONTRACTOR TO RESTORE SITE TO PRECONSTRUCTION CONDITION.
2. CONTRACTOR SHALL PROTECT THE GRATE INLET ON THE DRIVEWAY ADJACENT TO THE LIFT STATION DURING CONSTRUCTION.

LEGEND:

RFB	REINFORCED FILTER FABRIC BARRIER
IPB-I	INLET PROTECTION BARRIER FOR STAGE I
IPB-II	INLET PROTECTION BARRIER FOR STAGE II
SC	STABILIZED CONSTRUCTION ACCESS
RFD	ROCK FILTER DAM

ARCADIS
Infrastructure · Water · Environment · Buildings
1330 Post Oak Blvd, Suite 2250
Houston, TX 77056
Tel: 713-953-4800
Fax: 713-977-4620
www.arcadis.com
Texas Registered Engineering Firm F-533

SURVEYED BY: AMANI ENGR.
FB NO. P-6335

STATE OF TEXAS
DAVID F. RIDGWAY
105134
LICENSED
PROFESSIONAL ENGINEER
11/18/2025

CITY OF HOUSTON

HOUSTON PUBLIC WORKS

LIFT STATION REHABILITATION & RECONSTRUCTION CONSENT DECREE

EMNORA #2 LIFT STATION

SWPPP-6

WBS NUMBER	FOR CITY OF HOUSTON USE ONLY
R-000267-0175-4	
DRAWING SCALE	
AS NOTED	
CITY OF HOUSTON PM	
NP NAWARAJ PANTA, P.E.	
SHEET NO. 290 OF 312	

FILE PATH: C:\Users\omessan\DC\ACCDocs\Arcadis ACC US\AUS-30126616-Lift Station Rehab And Reconstruct CMAR\Project Files\10_WIP\10T Main PJ Folder\10T_Swpp\SWPPP-6_EMNORA #2.dwg
PLOT STYLE: COH.ctb PLOTTED: 11/17/2025 11:57 AM

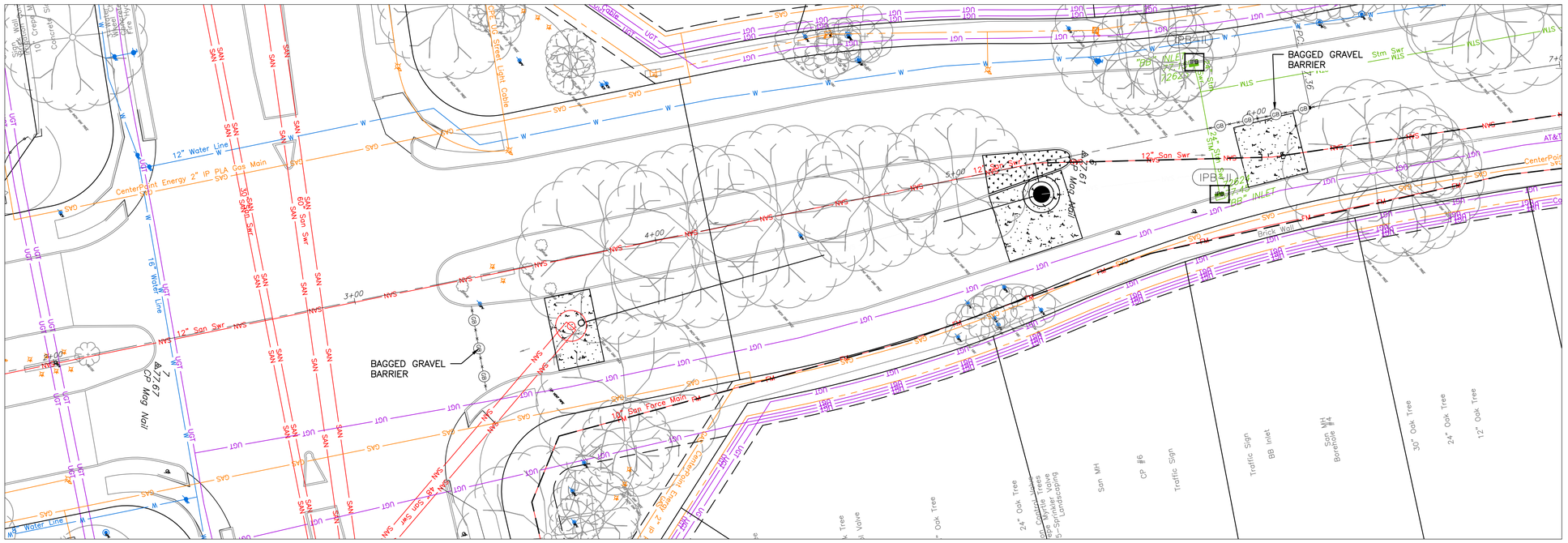

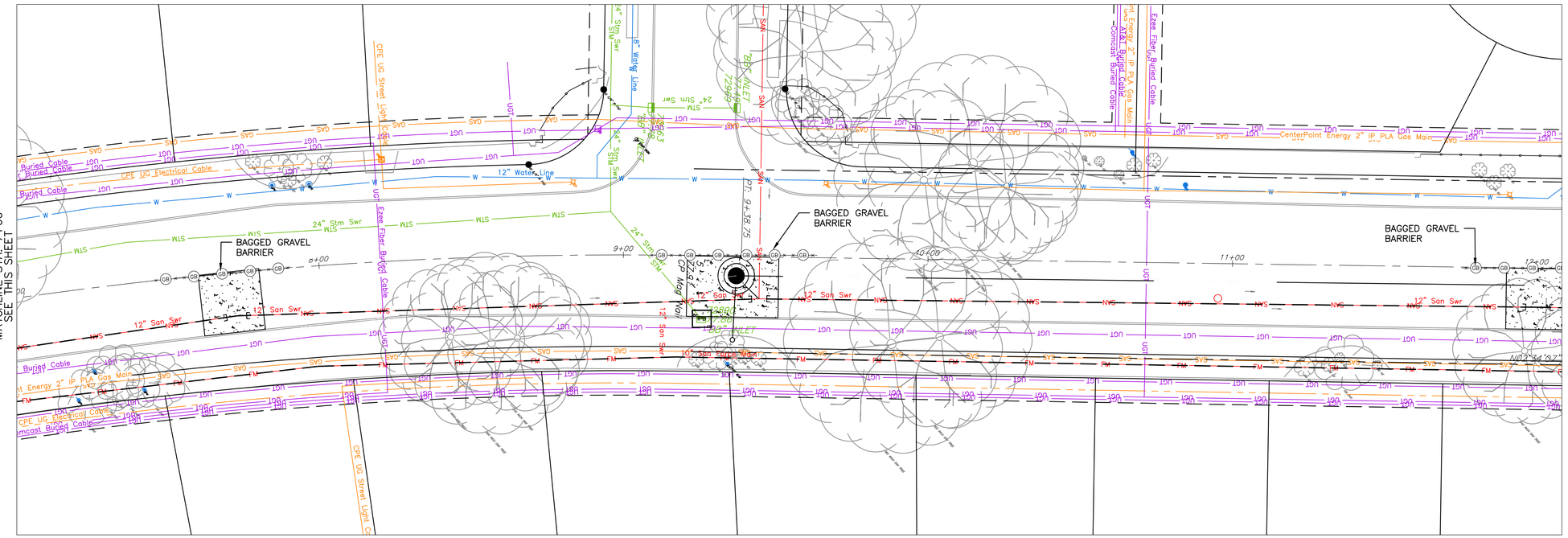

0' 10' 20' 40'

SCALE: 1"=20'

N

BENCHMARK:

STATIC GPS OBSERVATION MADE ON CITY OF HOUSTON MONUMENT 4855-7914 MADE ON 08/01/2024. A BRASS DISK LOCATED ON SOUTHSIDE OF WESTPARK APPROXIMATELY 0.24 MILE WEST OF W. HOUSTON CENTER BOULEVARD
ELEVATION = 70.96' (NAVD 88 GEOID 18)

100 YEAR BFE = 77.0 FEET (NAVD 88, 2001 ADJ)

500 YEAR BFE = 78.4 FEET (NAVD 88, 2001 ADJ)

NOTES:

1. CONTRACTOR TO RESTORE SITE TO PRECONSTRUCTION CONDITION

LEGEND:

RFB	REINFORCED FILTER FABRIC BARRIER
IPB-I	INLET PROTECTION BARRIER FOR STAGE I
IPB-II	INLET PROTECTION BARRIER FOR STAGE II
SC	STABILIZED CONSTRUCTION ACCESS
RFD	ROCK FILTER DAM

ARCADIS
Infrastructure · Water · Environment · Buildings
1330 Post Oak Blvd, Suite 2250
Houston, TX 77056
Tel: 713-953-4800
Fax: 713-977-4620
www.arcadis.com
Texas Registered Engineering Firm F-533

SURVEYED BY: AMANI ENGR.
FB NO. P-6335

STATE OF TEXAS
DAVID F. RIDGWAY
105134
LICENSED PROFESSIONAL ENGINEER
11/20/2025

CITY OF HOUSTON

HOUSTON PUBLIC WORKS

LIFT STATION REHABILITATION & RECONSTRUCTION CONSENT DECREE

SHADOW LAKES LIFT STATION

SWPPP-7

WBS NUMBER	FOR CITY OF HOUSTON USE ONLY
R-000267-0175-4	
DRAWING SCALE	
AS NOTED	
CITY OF HOUSTON PM	
NP NAWARAJ PANTA, P.E.	
SHEET NO. 291 OF 312	

FILE PATH: C:\Users\omessan\DC\ACCDocs\Arcadis ACC US\AUS-30126616-Lift Station Rehab And Reconstruct CMAR\Project Files\10_WIP\10T Main PJ Folder\10T_Swpp\SWPPP-7 And 8_SHADOW LAKES.dwg
PLOT STYLE: COH.ctb PLOTTED: 11/20/2025 5:16 PM

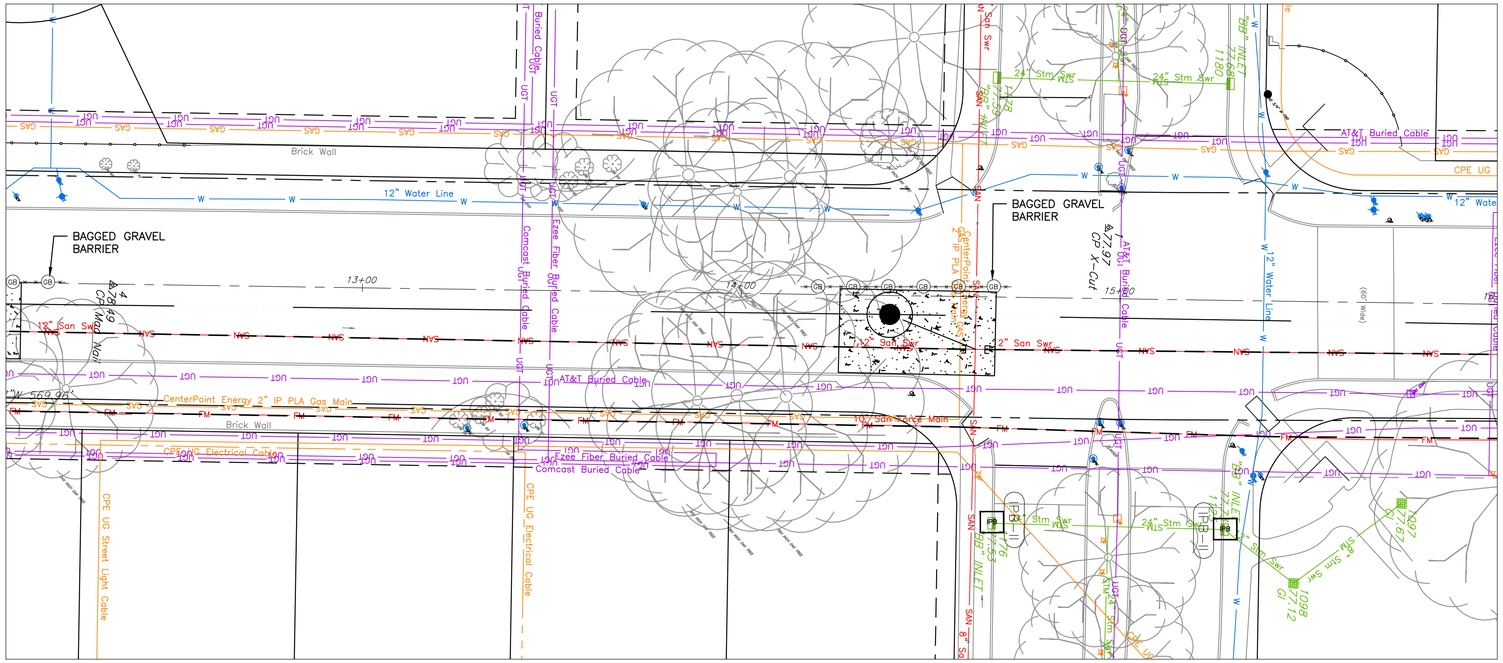

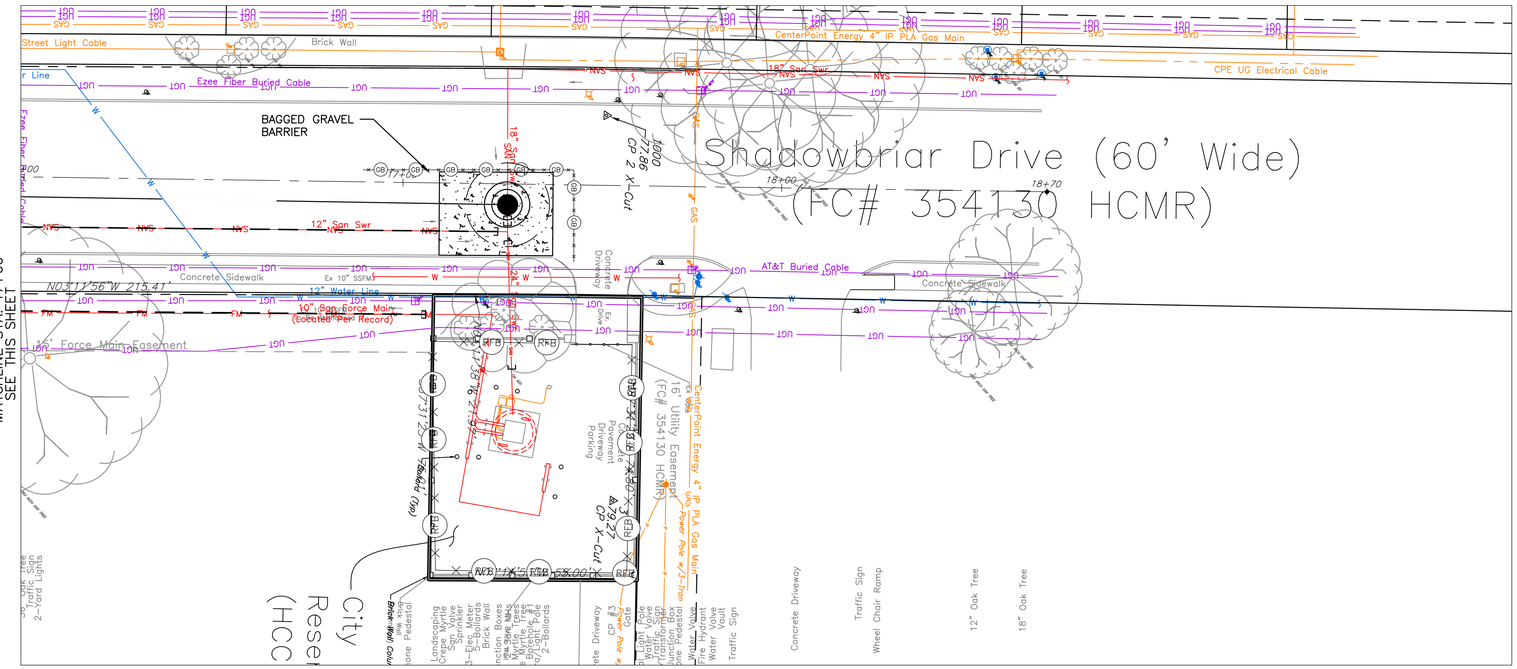

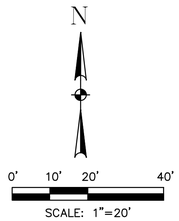

BENCHMARK:

STATIC GPS OBSERVATION MADE ON CITY OF HOUSTON MONUMENT 4855–7914 MADE ON 08/01/2024. A BRASS DISK LOCATED ON SOUTHSIDE OF WESTPARK APPROXIMATELY 0.24 MILE WEST OF W. HOUSTON CENTER BOULEVARD
ELEVATION = 70.96' (NAVD 88 GEOID 18)

100 YEAR BFE = 77.0 FEET (NAVD 88, 2001 ADJ)

500 YEAR BFE = 78.4 FEET (NAVD 88, 2001 ADJ)

NOTES:

1. CONTRACTOR TO RESTORE SITE TO PRECONSTRUCTION CONDITION

LEGEND:

RFB	REINFORCED FILTER FABRIC BARRIER
IPB–I	INLET PROTECTION BARRIER FOR STAGE I
IPB–II	INLET PROTECTION BARRIER FOR STAGE II
SC	STABILIZED CONSTRUCTION ACCESS
RFD	ROCK FILTER DAM

ARCADIS
Infrastructure · Water · Environment · Buildings
1330 Post Oak Blvd, Suite 2250
Houston, TX 77056
Tel: 713-953-4800
Fax: 713-977-4620
www.arcadis.com
Texas Registered Engineering Firm F-533

SURVEYED BY: AMANI ENGR.
FB NO. P-6335

STATE OF TEXAS
DAVID F. RIDGWAY
105134
LICENSED PROFESSIONAL ENGINEER
11/20/2025

CITY OF HOUSTON
HOUSTON PUBLIC WORKS

LIFT STATION REHABILITATION & RECONSTRUCTION CONSENT DECREE

SHADOW LAKES LIFT STATION
SWPPP–8

WBS NUMBER	FOR CITY OF HOUSTON USE ONLY
R-000267-0175-4	
DRAWING SCALE	
AS NOTED	
CITY OF HOUSTON PM	
NP NAWARAJ PANTA, P.E.	
SHEET NO. 292 OF 312	

FILE PATH: C:\Users\omessan\DC\ACCDocs\Arcadis ACC US\AUS-30126616-Lift Station Rehab And Reconstruct CMAR\Project Files\10_WIP\10T Main PJ Folder\10T_Swpp\SWPPP-7 And 8_SHADOW LAKES.dwg
PLOT STYLE: COH.ctb PLOTTED: 11/20/2025 5:16 PM

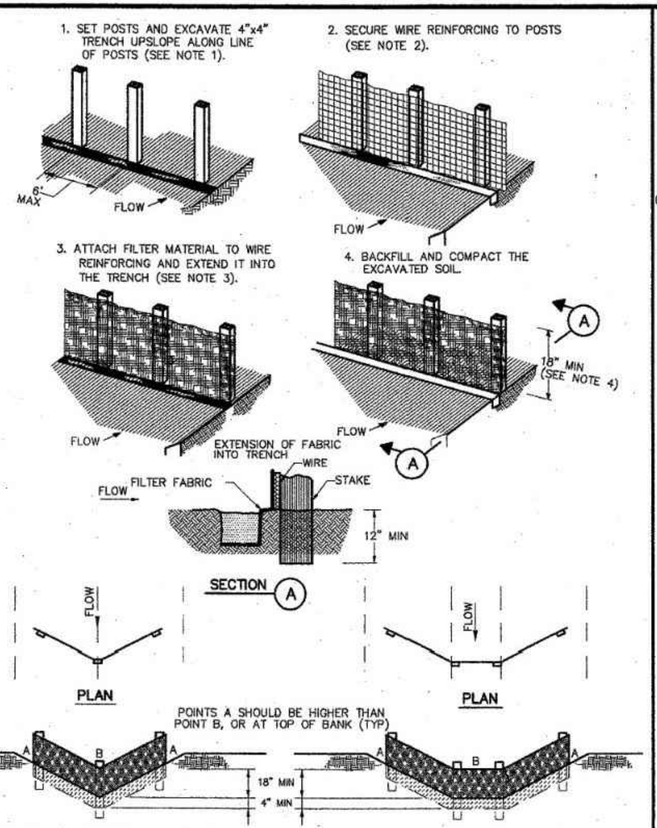

CONSTRUCTION NOTES:

1. SET 2 INCH BY 2 INCH WOODEN STAKES SPACED A MAX OF 6 FEET APART AND EMBEDDED A MIN OF 12 INCHES.
2. WOVEN WIRE REINFORCING TO BE FASTENED SECURELY TO BARRIER POSTS WITH STAPLES.
3. FILTER CLOTH TO BE FASTENED SECURELY TO WOVEN WIRE REINFORCING, WITH TIES SPACED EVERY 24 INCHES AT TOP AND MIDSECTION.
4. MINIMUM HEIGHT OF FILTER SHOULD BE 18 INCHES AND A MAXIMUM OF 36 INCHES ABOVE NATURAL GROUND.
5. WHEN TWO SECTIONS OF FILTER CLOTH ADJOIN EACH OTHER THEY SHALL BE OVERLAPPED 6 INCHES AT THE POSTS, AND FOLDED.
6. SEE COH STANDARD SPECIFICATION FOR FILTER FABRIC BARRIER.

SYMBOL

REINFORCED FILTER FABRIC BARRIER

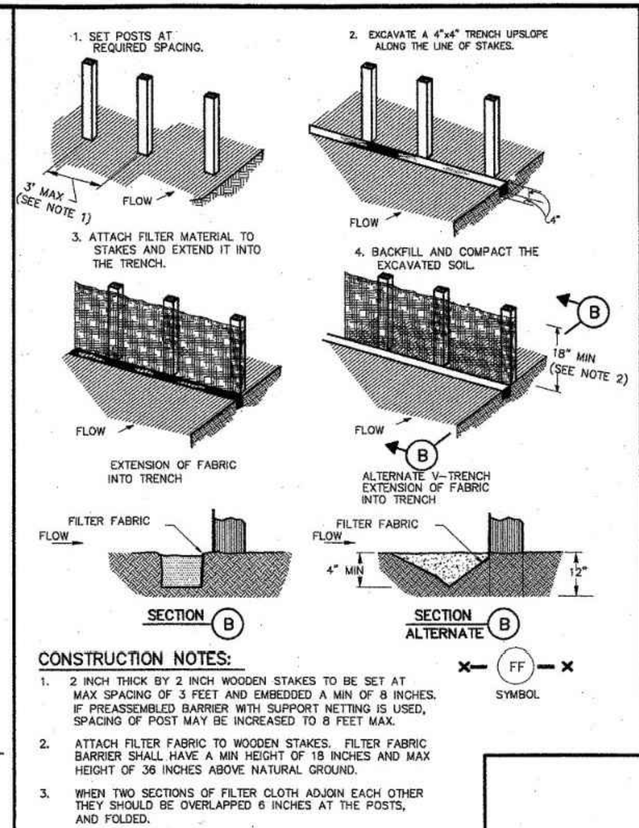

CONSTRUCTION NOTES:

1. 2 INCH THICK BY 2 INCH WOODEN STAKES TO BE SET AT MAX SPACING OF 3 FEET AND EMBEDDED A MIN OF 8 INCHES. IF PREASSEMBLED BARRIER WITH SUPPORT NETTING IS USED, SPACING OF POST MAY BE INCREASED TO 8 FEET MAX.
2. ATTACH FILTER FABRIC TO WOODEN STAKES. FILTER FABRIC BARRIER SHALL HAVE A MIN HEIGHT OF 18 INCHES AND MAX HEIGHT OF 36 INCHES ABOVE NATURAL GROUND.
3. WHEN TWO SECTIONS OF FILTER CLOTH ADJOIN EACH OTHER THEY SHOULD BE OVERLAPPED 6 INCHES AT THE POSTS, AND FOLDED.
4. SEE COH STANDARD SPECIFICATION FOR FILTER FABRIC BARRIER.

SYMBOL

FILTER FABRIC BARRIER

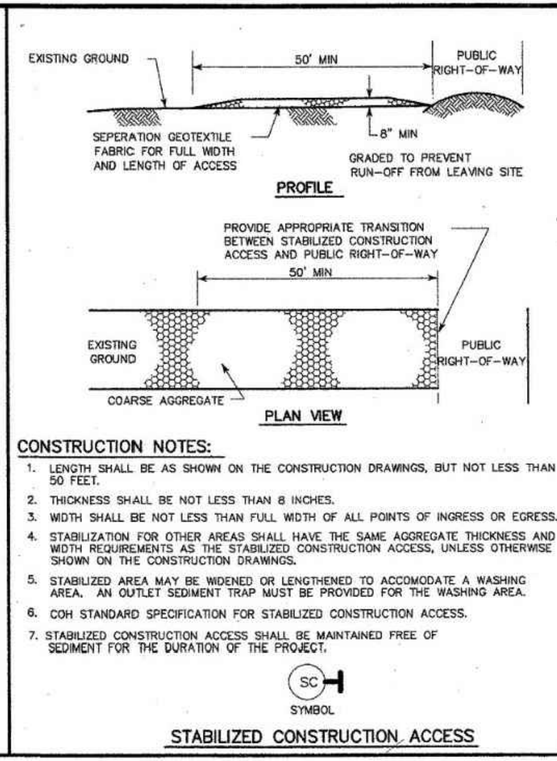

CONSTRUCTION NOTES:

1. LENGTH SHALL BE AS SHOWN ON THE CONSTRUCTION DRAWINGS, BUT NOT LESS THAN 50 FEET.
2. THICKNESS SHALL BE NOT LESS THAN 8 INCHES.
3. WIDTH SHALL BE NOT LESS THAN FULL WIDTH OF ALL POINTS OF INGRESS OR EGRESS.
4. STABILIZATION FOR OTHER AREAS SHALL HAVE THE SAME AGGREGATE THICKNESS AND WIDTH REQUIREMENTS AS THE STABILIZED CONSTRUCTION ACCESS, UNLESS OTHERWISE SHOWN ON THE CONSTRUCTION DRAWINGS.
5. STABILIZED AREA MAY BE WIDENED OR LENGTHENED TO ACCOMODATE A WASHING AREA. AN OUTLET SEDIMENT TRAP MUST BE PROVIDED FOR THE WASHING AREA.
6. COH STANDARD SPECIFICATION FOR STABILIZED CONSTRUCTION ACCESS.
7. STABILIZED CONSTRUCTION ACCESS SHALL BE MAINTAINED FREE OF SEDIMENT FOR THE DURATION OF THE PROJECT.

SC
SYMBOL

STABILIZED CONSTRUCTION ACCESS

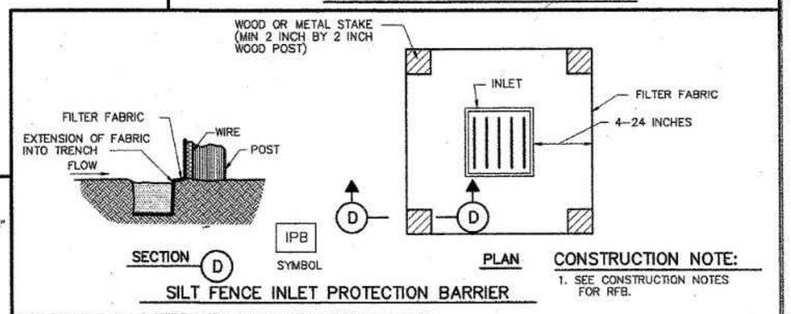

CONSTRUCTION NOTE:

1. SEE CONSTRUCTION NOTES FOR RFB.

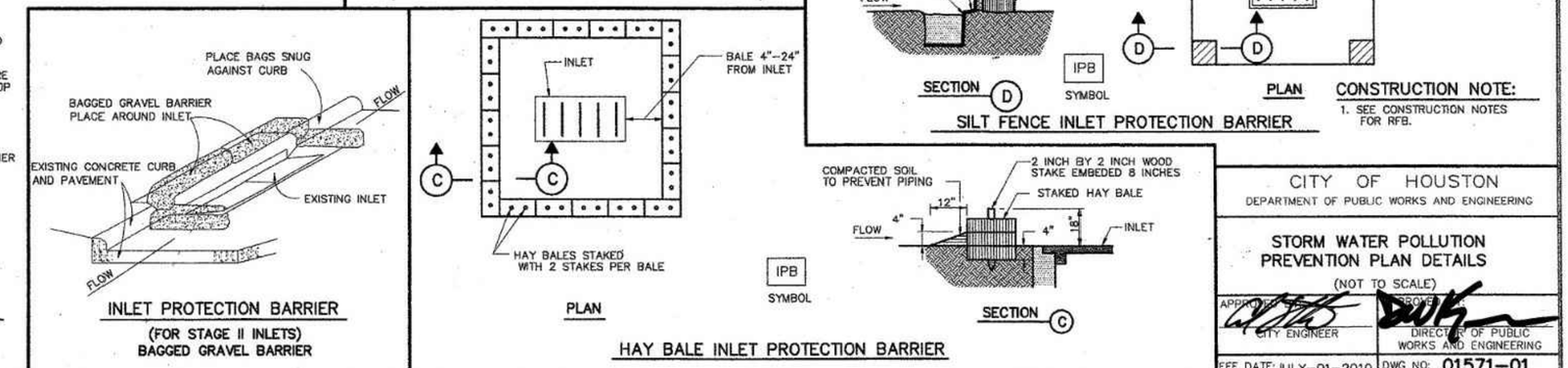

CITY OF HOUSTON
DEPARTMENT OF PUBLIC WORKS AND ENGINEERING

STORM WATER POLLUTION PREVENTION PLAN DETAILS

(NOT TO SCALE)

APPROVED — CITY ENGINEER
APPROVED — DIRECTOR OF PUBLIC WORKS AND ENGINEERING

EFF DATE: JULY-01-2010
DWG NO: 01571-01

ARCADIS
Infrastructure · Water · Environment · Buildings
1330 Post Oak Blvd, Suite 2250
Houston, TX 77056
Tel: 713-953-4800
Fax: 713-977-4620
www.arcadis.com
Texas Registered Engineering Firm F-533
SURVEYED BY: AMANI ENGR.
FB NO. P-6335

STATE OF TEXAS — DAVID F. RIDGWAY — 105134 — LICENSED PROFESSIONAL ENGINEER — 11/20/2025

CITY OF HOUSTON

HOUSTON PUBLIC WORKS

LIFT STATION REHABILITATION & RECONSTRUCTION CONSENT DECREE

STORM WATER POLLUTION PREVENTION PLAN DETAILS

SWPPP-9

WBS NUMBER	FOR CITY OF HOUSTON USE ONLY
R-000267-0175-4	
DRAWING SCALE	
AS NOTED	
CITY OF HOUSTON PM	
NP NAWARAJ PANTA, P.E.	
SHEET NO. 293 OF 312	

FILE PATH: C:\Users\omessan\DC\ACCDocs\Arcadis ACC US\AUS-30126616-Lift Station Rehab And Reconstruct CMAR\Project Files\10_WIP\10T Main PJ Folder\10T_Swpp\SWPPP-9 STANDARD DETAILS.dwg
PLOT STYLE: COH.ctb PLOTTED: 11/20/2025 3:07 PM

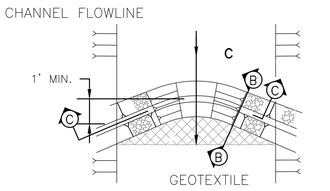

IN-CHANNEL FILTER DAM
PLAN

GEOTEXTILE NOTES:

MIN. AOS	SIEVE NO.	120 MIN
MAX. AOS	SIEVE NO.	50 MAX
WEIGHT	OZ/SY	4 OZ. MIN

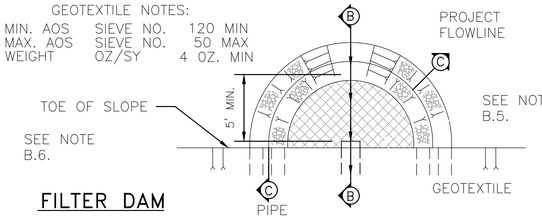

FILTER DAM AT DETENTION BASIN OUTFALL PIPE
PLAN

FILTER DAM

RFD-TYPE

SYMBOL

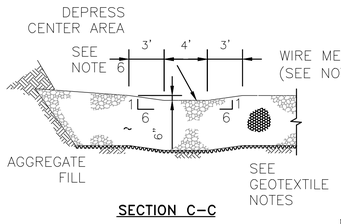

SECTION C-C

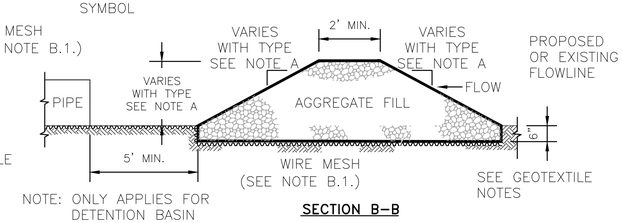

SECTION B-B

NOTE: ONLY APPLIES FOR DETENTION BASIN OUTFALL PIPE PROTECTION.

A. TYPES OF FILTER DAMS

1. TYPE 1 (NON-REINFORCED)
   a. HEIGHT – 18-24 INCHES. MEASURE VERTICALLY FROM EXISTING GROUND TO TOP OF FILTER DAM.
   b. TOP WIDTH – 2 FEET (MINIMUM)
   c. SLOPES – 2:1 (MAXIMUM).
2. TYPE 2 (REINFORCED).
   a. HEIGHT – 18-36 INCHES. MEASURE VERTICALLY FROM EXISTING GROUND TO TOP OF FILTER DAM.
   b. TOP WIDTH – 2 FEET (MINIMUM).
   c. SLOPES – 2:1 (MAXIMUM).
3. TYPE 3 (REINFORCED)
   a. HEIGHT – 36-48 INCHES. MEASURE VERTICALLY FROM EXISTING GROUND TO TOP OF FILTER DAM.
   b. TOP WIDTH – 2 FEET (MINIMUM).
   c. SLOPES – 3:1 (MAXIMUM).
4. TYPE 4 (GABION)
   a. HEIGHT – 30 INCHES (MINIMUM). MEASURE VERTICALLY FROM EXISTING GROUND TO TOP OF FILTER DAM.
   b. TOP WIDTH – 2 FEET (MINIMUM).
5. TYPE 5. AS SHOWN ON THE PLANS.

B. CONSTRUCT FILTER DAMS ACCORDING TO THE FOLLOWING CRITERIA UNLESS SHOWN OTHERWISE ON THE PLANS.

1. TYPE 2 AND 3 FILTER DAMS: SECURE WITH 20 GAUGE GALVANIZED WOVEN WIRE MESH WITH 1 INCH DIAMETER HEXAGONAL OPENINGS.
2. PLACE AGGREGATE FILL ON THE WIRE MESH TO HEIGHT AND SLOPES SHOWN ON PLANS OR AS SPECIFIED BY THE ENGINEER.
   a. 3-5 INCHES FOR ROCK FILTER DAM TYPES 1, 2 AND 4.
   b. 4-8 INCHES FOR ROCK FILTER DAM TYPE 3.
3. FOLD WIRE MESH AT UPSTREAM SIDE OVER AGGREGATE FILL AND TIGHTLY SECURED TO ITSELF ON THE DOWNSTREAM SIDE USING WIRE TIES OR RINGS.
4. IN STREAMS: SECURE OR STAKE MESH TO STREAM BED PRIOR TO AGGREGATE PLACEMENT.
5. EMBED ONE FOOT MINIMUM INTO SLOPE AND RAISE ONE FOOT HIGHER THAN CENTER OF DEPRESSED AREA AT SLOPE.

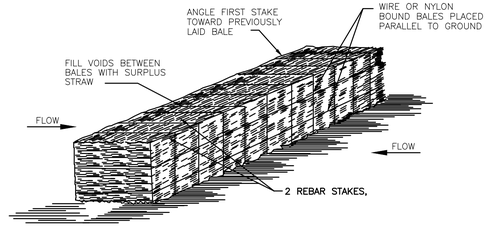

STRAW BALE FENCE

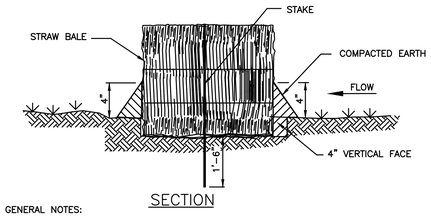

SECTION

GENERAL NOTES:

1. LIMIT USE TO ONSITE SWALES FOR PURPOSES OF LOW FLOW VELOCITY DISSIPATION FOR EROSION CONTROL. USE STRAW BALE FENCES TO TREAT OVERLAND FLOW ONLY. DO NOT USE STRAW BALE FENCES TO TREAT FLOW IN CHANNELS.
2. PLACE BALES IN A ROW WITH ENDS TIGHTLY ABUTTING ADJACENT BALES. FILL THE VOIDS BETWEEN BALES WITH SURPLUS STRAW. PLACE BALES WITH BINDING PARALLEL TO GROUND SURFACE.
3. IMBED EACH BALE AT LEAST 4 INCHES IN THE SOIL.
4. SECURELY ANCHOR BALES IN PLACE BY REBAR STAKES. DRIVE STAKES THROUGH THE BALES AND AT LEAST 18 INCHES INTO THE GROUND. ANGLE THE STAKE IN EACH BALE TOWARD THE PREVIOUS BALE TO FORCE THE BALES TOGETHER.
5. BIND BALES WITH WIRE OR NYLON ROPE TIED ACROSS THE STRAW BALES.
6. REPLACE WITH NEW STRAW BALE FENCE EVERY TWO MONTHS.
7. WATTLES STAKED INTO THE GROUND ARE A PREFERRED SUBSTITUTE FOR STRAW BALE FENCES.

STRAW BALE FENCE

SBF

SYMBOL

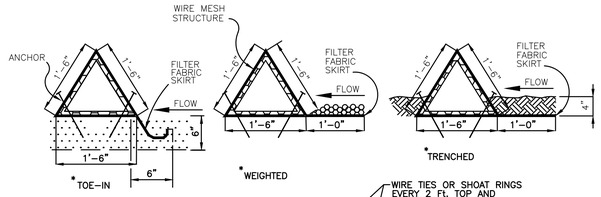

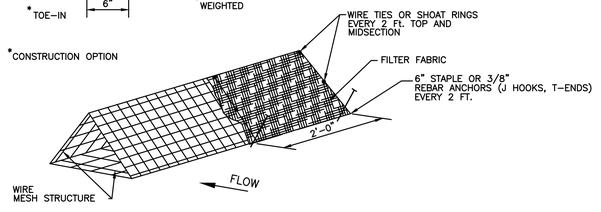

GENERAL NOTES:

1. PLACE BARRIER IN A ROW WITH ENDS TIGHTLY ABUTTING THE ADJACENT BARRIER.
2. USING ONE CONTINUOUS SECTION OF FILTER FABRIC, WRAP FABRIC AROUND WIRE MESH AND EXTEND FABRIC TO FORM SKIRT ON THE UPSTREAM SIDE.
3. WEIGHT SKIRT WITH A CONTINUOUS LAYER OF 3-INCH TO 5-INCH OPEN GRADED ROCK, OR TOE IN SKIRT WITH SIX INCHES WITH MECHANICALLY COMPACTED MATERIAL.
4. SECURELY ANCHOR BARRIER AND SKIRT IN PLACE USING 6-INCH WIRE STAPLES ON 2-FOOT CENTERS ON BOTH EDGES, OR STAKE USING 18-INCH BY 3/8 INCH REBARS (T-ENDS, J-HOOKS).
5. FILTER FABRIC SHALL BE LAPPED OVER ENDS 6 INCHES TO COVER SEGMENT JOINTS. FASTEN JOINTS WITH GALVANIZED SHOAT RINGS OR EQUIVALENT.
6. THE BARRIER STRUCTURE SHALL BE WELDED WIRE MESH, 18 INCHES ON EACH SIDE.

TRIANGULAR
FILTER FABRIC FENCE

TFF

SYMBOL

ARCADIS
Infrastructure · Water · Environment · Buildings
1330 Post Oak Blvd, Suite 2250
Houston, TX 77056
Tel: 713-953-4800
Fax: 713-977-4620
www.arcadis.com
Texas Registered Engineering Firm F-533

SURVEYED BY: AMANI ENGR.
FB NO. P-6335

STATE OF TEXAS
DAVID F. RIDGWAY
105134
LICENSED
PROFESSIONAL ENGINEER
11/20/2025

CITY OF HOUSTON

HOUSTON PUBLIC WORKS

LIFT STATION REHABILITATION & RECONSTRUCTION CONSENT DECREE

STORM WATER POLLUTION PREVENTION PLAN DETAILS

SWPPP-10

WBS NUMBER	FOR CITY OF HOUSTON USE ONLY
R-000267-0175-4	
DRAWING SCALE	
AS NOTED	
CITY OF HOUSTON PM	
NP NAWARAJ PANTA, P.E.	
SHEET NO. 294 OF 312	

FILE PATH: C:\Users\omessan\DC\ACCDocs\Arcadis ACC US\AUS-30126616-Lift Station Rehab And Reconstruct CMAR\Project Files\10_WIP\10T Main PJ Folder\10T_Swpp\SWPPP-10 STANDARD DETAILS.dwg
PLOT STYLE: COH.ctb PLOTTED: 1/20/2025 3:35 PM

TRAFFIC CONTROL SEQUENCE OF CONSTRUCTION

CHERRY OAK

USE TYPICAL CITY OF HOUSTON ONE–LANE CLOSURE TO CONDUCT PROPOSED IMPROVEMENTS ON CHERRY OAKS STREET LIFT STATION. REMOVE SINGLE–LANE CLOSURE TRAFFIC CONTROL DEVICES AND OPEN LANES TO TRAFFIC AFTER EACH WORKING DAY.

ANNUCIATION ST

USE TYPICAL CITY OF HOUSTON ONE–LANE CLOSURE TO CONDUCT PROPOSED IMPROVEMENTS ON ANNUCIATION STREET LIFT STATION. REMOVE SINGLE–LANE CLOSURE TRAFFIC CONTROL DEVICES AND OPEN LANES TO TRAFFIC AFTER EACH WORKING DAY.

EMNORA LN

REFER TO PROPOSED TRAFFIC CONTROL PLAN AND DETOUR SHEET ALONG EMNORA LANE TO INSTALL THE PROPOSED SANITARY SEWER AND MANHOLE. MAINTAIN 12 FT MINIMUM TRAVEL LANES. INSTALL LOW PROFILE CONCRETE BARRIERS FOR DEEP EXCAVATION.

SHADOWBRIAR DR

1. CLOSE EASTBOUND LANE AND DETOUR EASTBOUND TRAFFIC TO INSTALL THE PROPOSED SANITARY SEWER MANHOLES AND RESTORE PAVEMENT ALONG SHADOWBRIAR DR. MAINTAIN MIN 12 FT WIDE LANE FOR WESTBOUND TRAFFIC
2. OPEN NEWLY CONSTRUCTED EASTBOUND LANE FOR TRAFFIC AFTER WORK IS COMPLETED

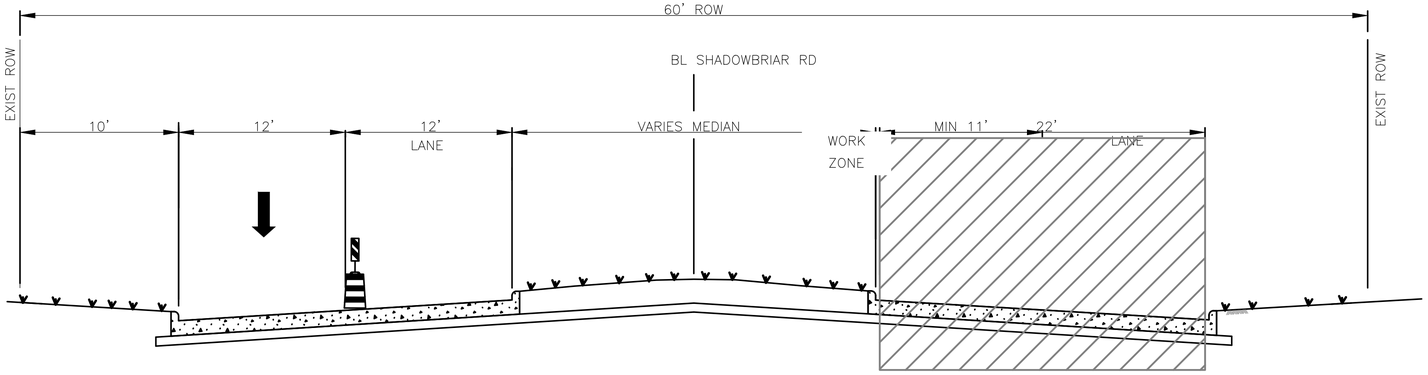

SHADOWBRIAR DR
BEGIN PROJECT

N.T.S.

NOTES

1. CONTRACTOR TO SECURE THE BORE PITS AT THE END OF EACH WORKING DAY USING STEEL PLATES ON TOP OF THE BORE PITS.
2. CONTRACTOR TO MAINTAIN ACCESS TO BUSINESSES AND RESIDENCES AT ALL TIMES.
3. RESTORE SIGNING AND PAVEMENT MARKINGS TO ORIGINAL LOCATION AFTER WORK ACCOMPLISHED.
4. FOR PROPERTIES THAT HAVE TWO DRIVEWAYS, THE CONTRACTOR CAN CLOSE ONE DRIVEWAY AT A TIME TO FINISH THE WORK AT THE DRIVEWAY AND KEEP THE OTHER DRIVEWAY OPEN TO MAINTAIN ACCESS TO THE PROPERTY.
5. REFER TO CITY OF HOUSTON TRAFFIC CONTROL STANDARD DETAILS FOR MORE INFORMATION.

NO.	DATE	REVISION	APP.

Gauge ENGINEERING
11750 KATY FREEWAY SUITE 400
HOUSTON, TX 77079
TEXAS PE FIRM REG. F–20017

SURVEYED BY: AMANI ENGR.
FB NO. P–6335

STATE OF TEXAS
KARAM QADDO
125611
LICENSED
PROFESSIONAL ENGINEER
11/13/25

CITY OF HOUSTON
HOUSTON PUBLIC WORKS

LIFT STATION REHABILITATION & RECONSTRUCTION CONSENT DECREE

TRAFFIC CONTROL SEQUENCE OF CONSTRUCTION

SHEET 1 OF 1

WBS NUMBER	FOR CITY OF HOUSTON USE ONLY
R–000267–0175–4	
DRAWING SCALE	
AS NOTED	
CITY OF HOUSTON PM	
NP NAWARAJ PANTA, P.E.	
SHEET NO. 295 OF 312	

FILE PATH: P:\Arcadis\1392–CMAR\4–0–Production–Working\4–1–CAD\TCP\1392–TCP SEQ.OF CONSTRUCTION.dwg
PLOT STYLE: COH.ctb PLOTTED: 11/13/2025 10:52 AM

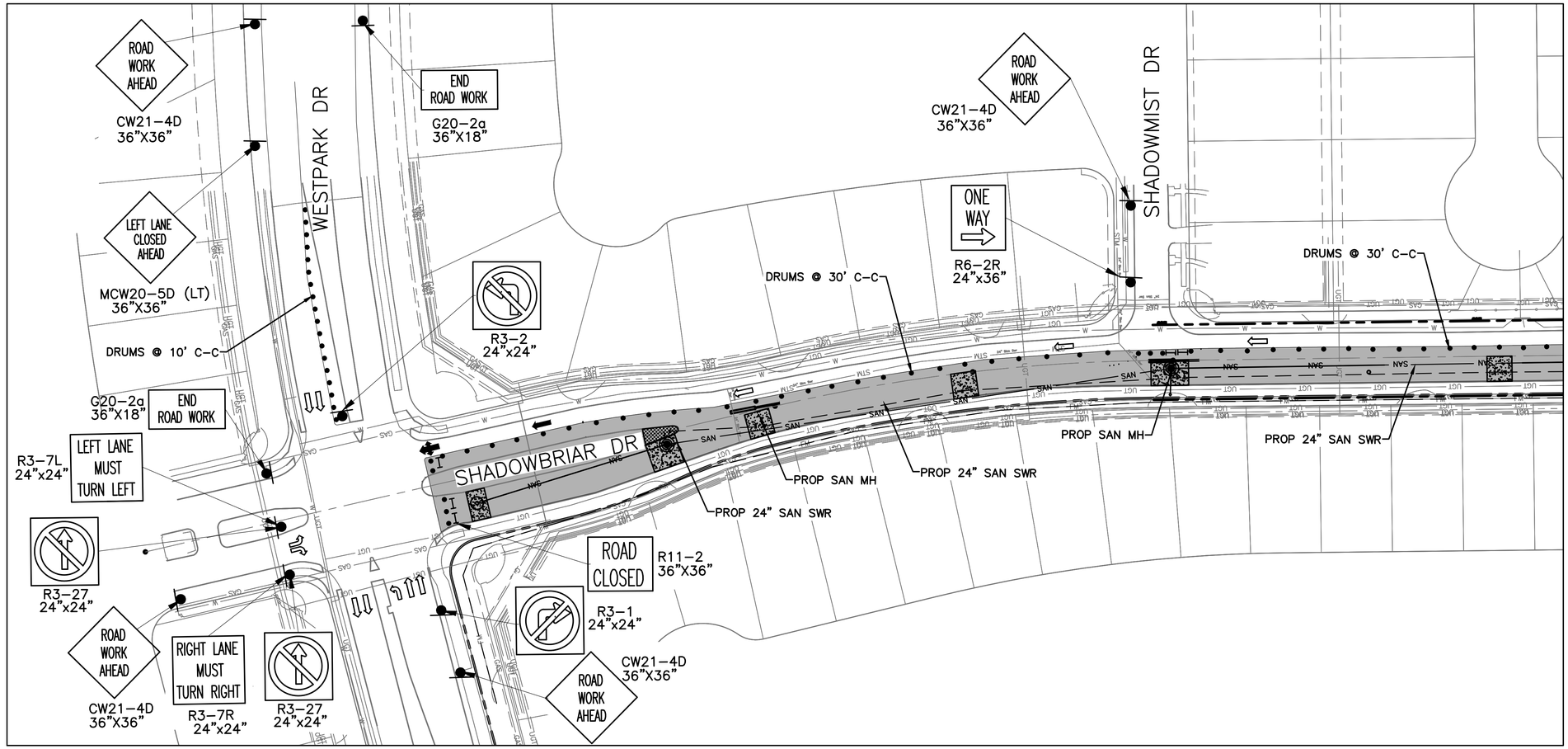

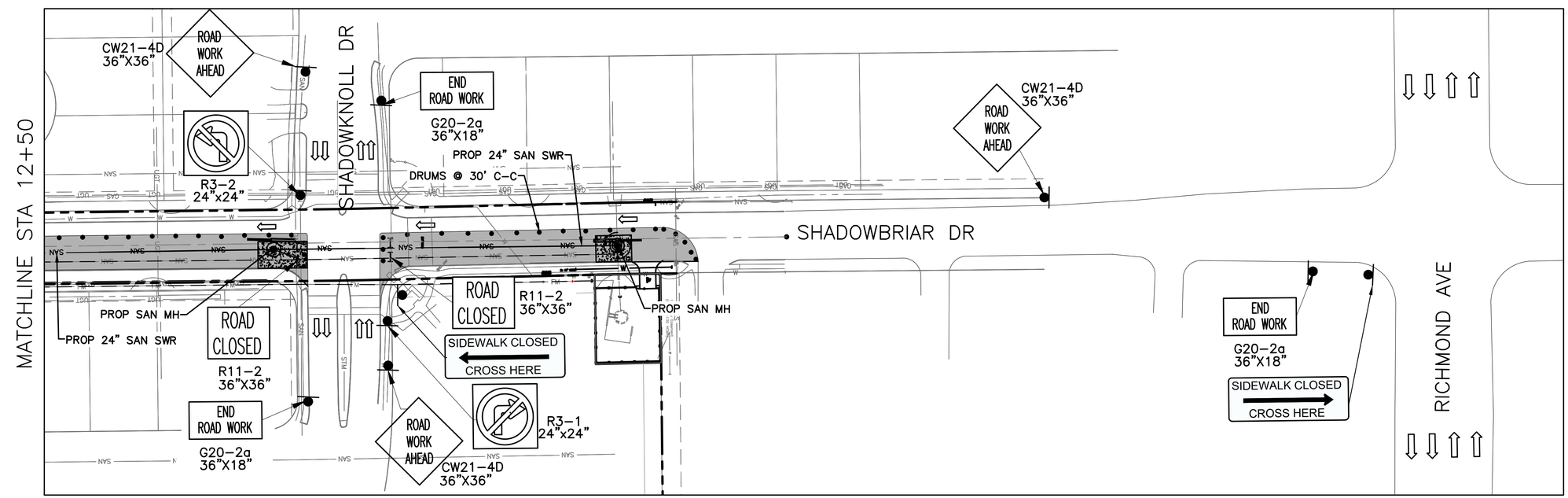

LEGEND

- EXISTING TRAFFIC ARROW
- PROPOSED TRAFFIC ARROW
- DRUM
- TY I WITH TY II END TREATMENT LPCB
- WORK ZONE
- TYPE III BARRICADE W/ROAD CLOSED SIGN

NO.	DATE	REVISION	APP.

NOTES:

1. PRIOR TO CONSTRUCTION ACROSS DRIVEWAY COORDINATE WITH CONSTRUCTION MANAGER. CONTRACTOR TO MAINTAIN ACCESS TO RESIDENTS AT ALL TIMES.
2. MAINTAIN MINIMUM 12-FT LANE WIDTH AT ALL TIMES
3. REFER TO DETOUR SHEET FOR MORE INFORMATION.
4. REFER TO TCP STANDARD DETAILS FOR MORE INFORMATION.
5. ALONG S DAIRY ASHFORD, RICHMOND AVE SIGNS SPACING IS 160-FT, AND ALONG WESTPARK DR, SHADOWBRIAR DR, SHADOWKNOLLDR, SHADOWMIST DR & W HOUSTON CENTER SIGNS SPACING IS 120-FT

N

0' 25' 50' 100'

SCALE: 1"=100'

Gauge ENGINEERING
11750 KATY FREEWAY SUITE 400
HOUSTON, TX 77079
TEXAS PE FIRM REG. F-20017

SURVEYED BY: AMANI ENGR.
FB NO. P-6335

STATE OF TEXAS
KARAM QADDO
125611
LICENSED PROFESSIONAL ENGINEER
11/18/25

CITY OF HOUSTON
HOUSTON PUBLIC WORKS

LIFT STATION REHABILITATION & RECONSTRUCTION CONSENT DECREE

SHADOWBRIAR DR TRAFFIC CONTROL PLANS

SHEET 1 OF 1

WBS NUMBER	FOR CITY OF HOUSTON USE ONLY
R-000267-0175-4	
DRAWING SCALE	
AS NOTED	
CITY OF HOUSTON PM	
NP NAWARAJ PANTA, P.E.	
SHEET NO. 296 OF 312	

FILE PATH: P:\Arcadis\1392-CMAR\4-0-Production-Working\4-1-CAD\TCP\1392-PR-TCP01.dwg
PLOT STYLE: COH.ctb PLOTTED: 11/18/2025 1:48 PM

* FLAGGERS MUST BE PRESENT FROM 7:00 AM TO 7:00 PM
AT 7:00 PM REPLACE FLAGGER SIGN WITH DETOUR SIGN. SEE EMNORA DETOUR SHEET FOR MORE INFORMATION.

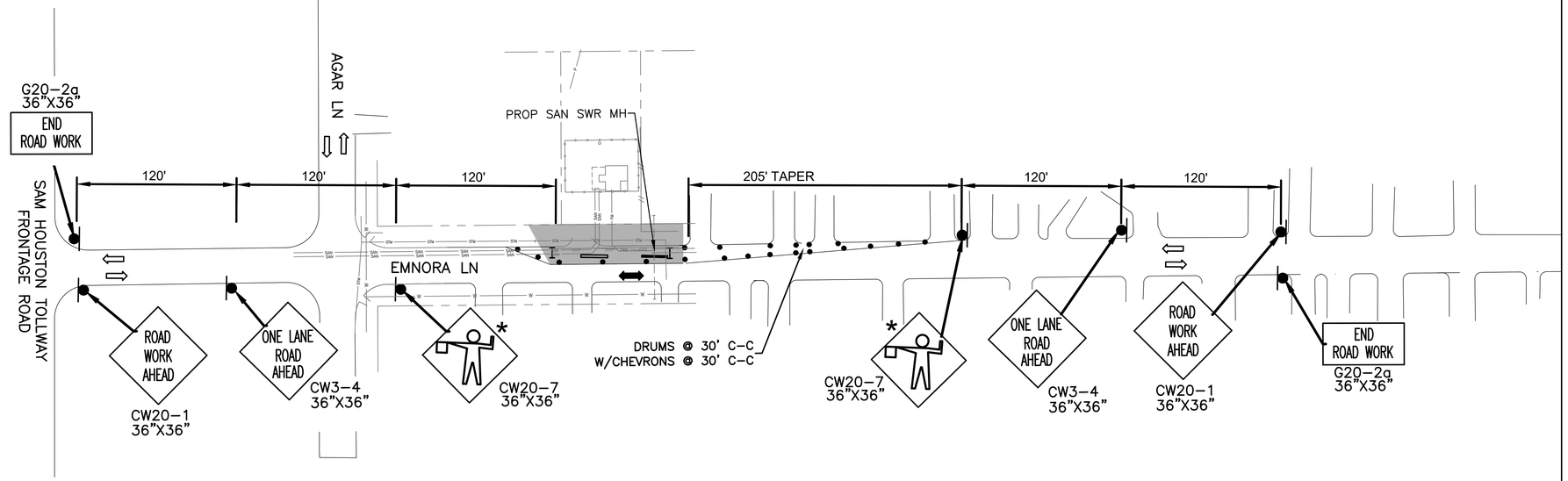

LEGEND

- EXISTING TRAFFIC ARROW
- PROPOSED TRAFFIC ARROW
- DRUM
- TY I WITH TY II END TREATMENT LPCB
- WORK ZONE
- TYPE III BARRICADE W/ROAD CLOSED SIGN

NO.	DATE	REVISION	APP.

NOTES:

1. PRIOR TO CONSTRUCTION ACROSS DRIVEWAY COORDINATE WITH CONSTRUCTION MANAGER. CONTRACTOR TO MAINTAIN ACCESS TO RESIDENTS AT ALL TIMES.
2. MAINTAIN MINIMUM 12-FT LANE WIDTH AT ALL TIMES
3. REFER TO TCP STANDARD DETAILS FOR MORE INFORMATION.

N

0' 12.5' 25' 50'

SCALE: 1"=50'

Gauge ENGINEERING
11750 KATY FREEWAY SUITE 400
HOUSTON, TX 77079
TEXAS PE FIRM REG. F-20017

SURVEYED BY: AMANI ENGR.
FB NO. P-6335

STATE OF TEXAS
KARAM QADDO
125611
LICENSED
PROFESSIONAL ENGINEER
11/13/25

CITY OF HOUSTON

HOUSTON PUBLIC WORKS

LIFT STATION REHABILITATION & RECONSTRUCTION
CONSENT DECREE

EMNORA LN
TRAFFIC CONTROL PLANS

SHEET 1 OF 1

WBS NUMBER	FOR CITY OF HOUSTON USE ONLY
R-000267-0175-4	
DRAWING SCALE	
AS NOTED	
CITY OF HOUSTON PM	
NP NAWARAJ PANTA, P.E.	
SHEET NO. 297 OF 312	

FILE PATH: P:\Arcadis\1392-CMAR\4-0-Production-Working\4-1-CAD\TCP\1392-PR-TCP02.dwg
PLOT STYLE: ORG-COH.ctb LOTTED: 11/13/2025 10:53 AM

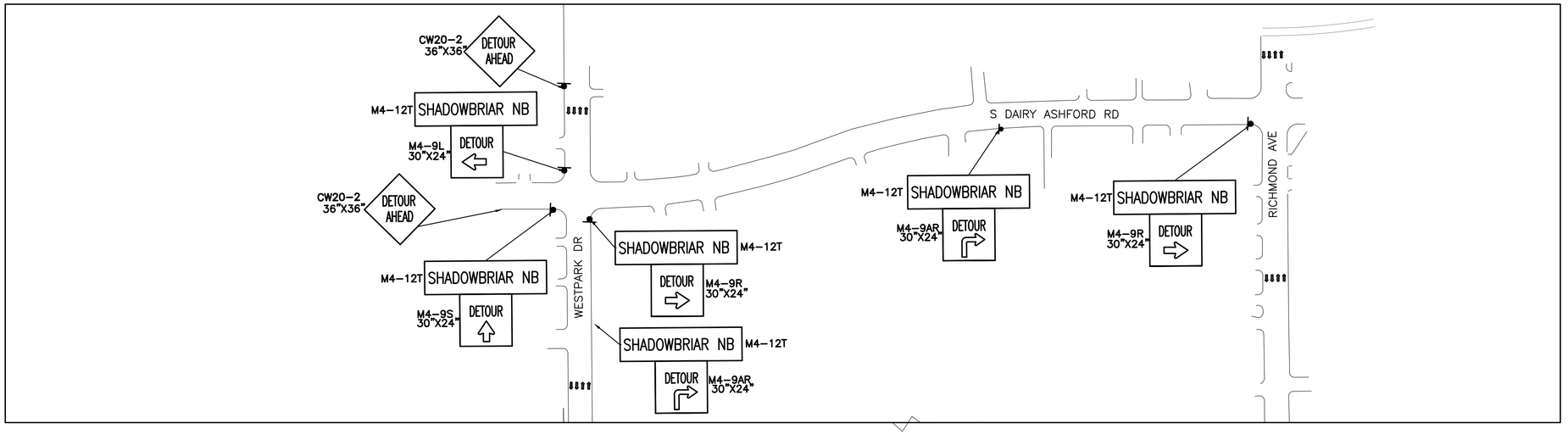

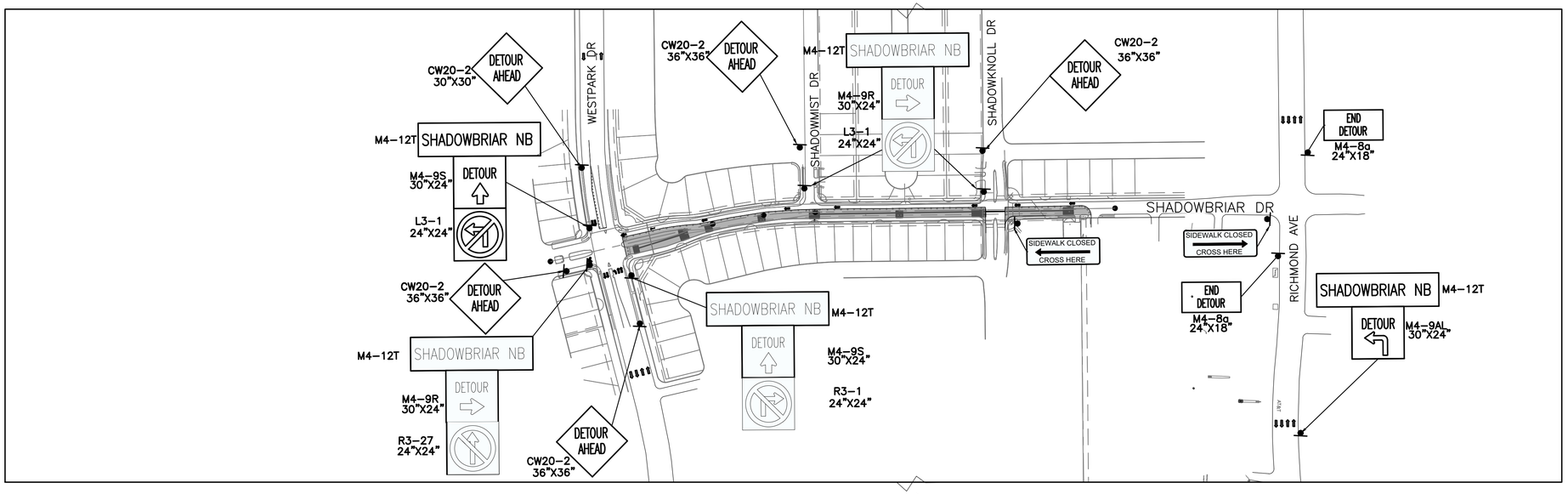

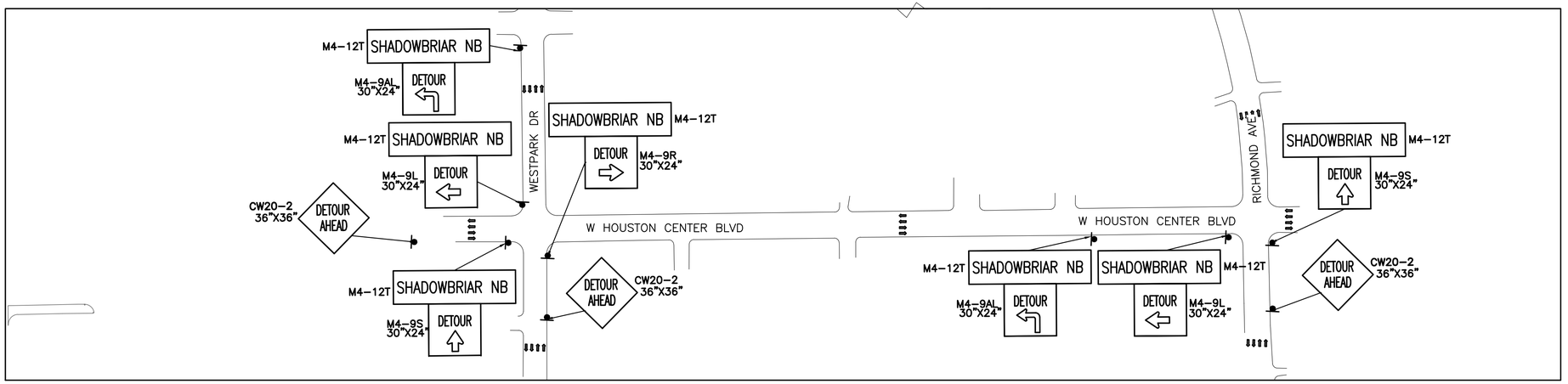

LEGEND

- EXISTING TRAFFIC ARROW
- PROPOSED TRAFFIC ARROW
- DRUM
- TY I WITH TY II END TREATMENT LPCB
- WORK ZONE
- TYPE III BARRICADE W/ROAD CLOSED SIGN

NO.	DATE	REVISION	APP.

NOTES:

1. PRIOR TO CONSTRUCTION ACROSS DRIVEWAY COORDINATE WITH CONSTRUCTION MANAGER. CONTRACTOR TO MAINTAIN ACCESS TO RESIDENTS AT ALL TIMES.
2. MAINTAIN MINIMUM 12-FT LANE WIDTH AT ALL TIMES
3. REFER TO TCP STANDARD DETAILS FOR MORE INFORMATION.
4. ALONG S DAIRY ASHFORD, RICHMOND AVE SIGNS SPACING IS 160-FT, AND ALONG WESTPARK DR, SHADOWBRIAR DR, SHADOWKNOLLDR, SHADOWMIST DR & W HOUSTON CENTER SIGNS SPACING IS 120-FT

N

0' 50' 100' 200'

SCALE: 1"=200'

Gauge ENGINEERING
11750 KATY FREEWAY SUITE 400
HOUSTON, TX 77079
TEXAS PE FIRM REG. F-20017

SURVEYED BY: AMANI ENGR.
FB NO. P-6335

KARAM QADDO
125611
LICENSED PROFESSIONAL ENGINEER
STATE OF TEXAS

11/18/25

CITY OF HOUSTON

HOUSTON PUBLIC WORKS

LIFT STATION REHABILITATION & RECONSTRUCTION CONSENT DECREE

SHADOWBRIAR DR DETOUR PLANS

SHEET 1 OF 1

WBS NUMBER	FOR CITY OF HOUSTON USE ONLY
R-000267-0175-4	
DRAWING SCALE	
AS NOTED	
CITY OF HOUSTON PM	
NP NAWARAJ PANTA, P.E.	
SHEET NO. 298 OF 312	

FILE PATH: P:\Arcadis\1392-CMAR\4-0-Production-Working\4-1-CAD\TCP\1392-PR-DETOUR 01.dwg
PLOT STYLE: COH.ctb PLOTTED: 11/18/2025 12:57 PM

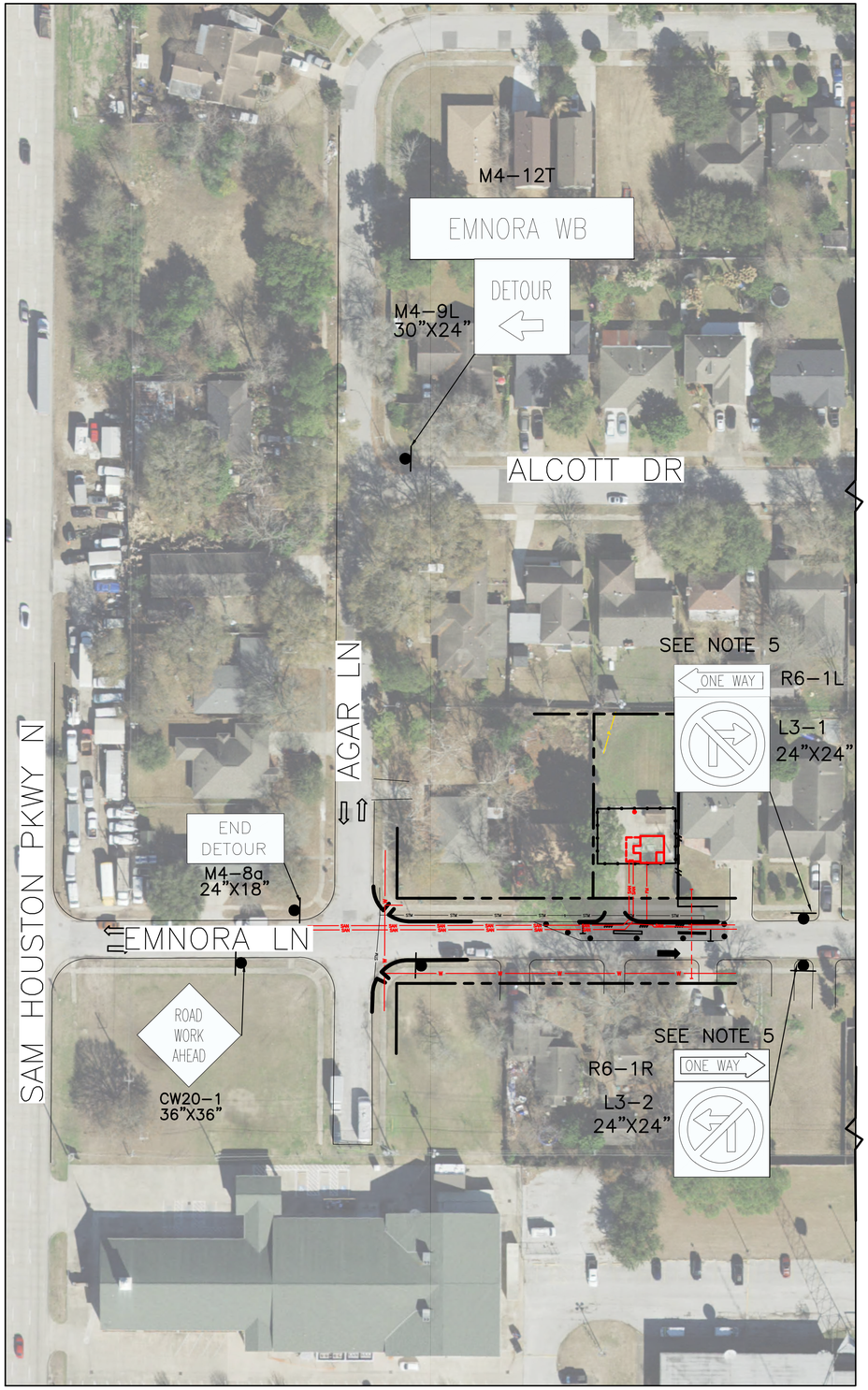

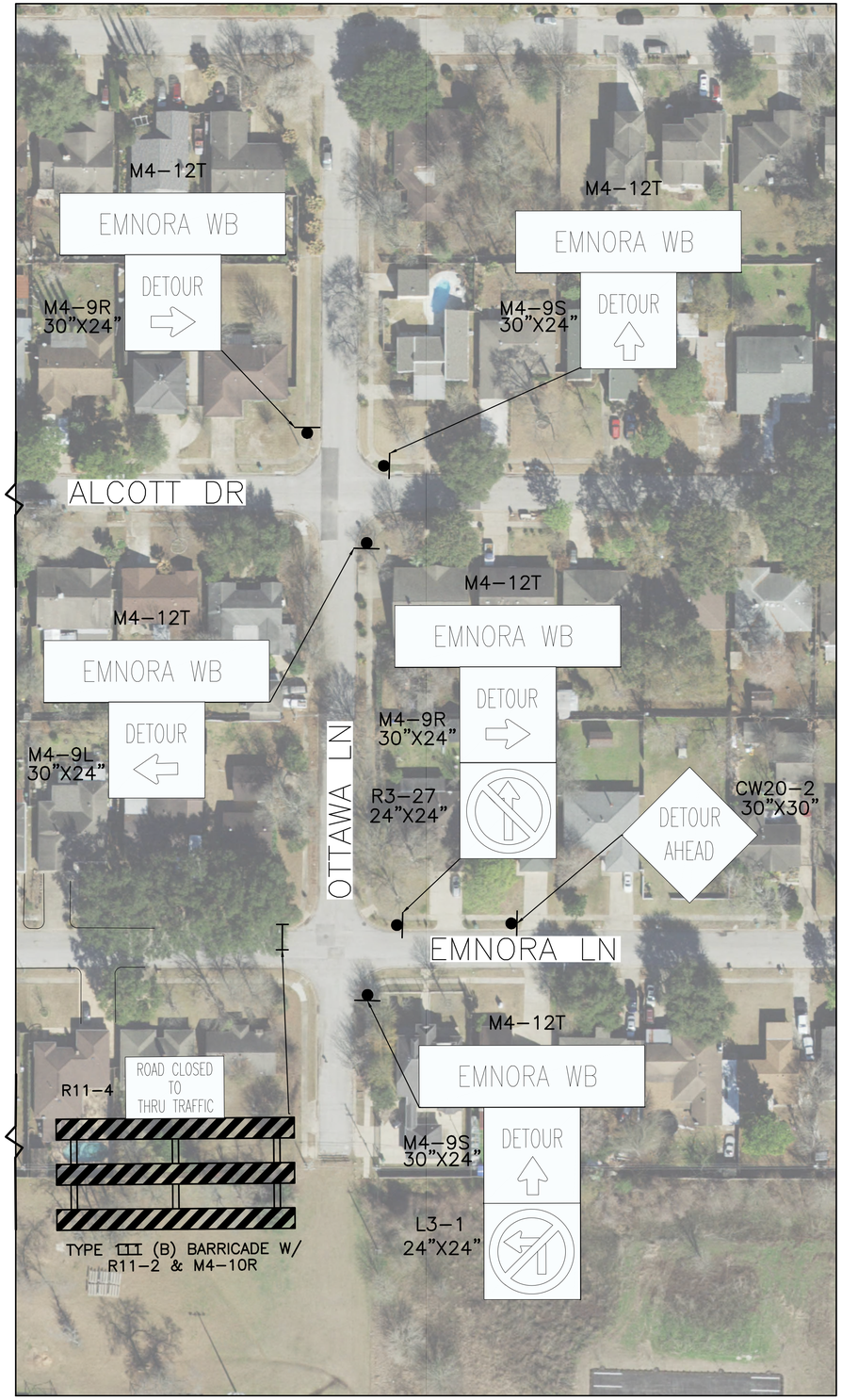

LEGEND

- EXISTING TRAFFIC ARROW
- PROPOSED TRAFFIC ARROW
- DRUM
- TY I WITH TY II END TREATMENT LPCB
- WORK ZONE
- TYPE III BARRICADE W/ROAD CLOSED SIGN

NO.	DATE	REVISION	APP.

NOTES:

1. PRIOR TO CONSTRUCTION ACROSS DRIVEWAY COORDINATE WITH CONSTRUCTION MANAGER. CONTRACTOR TO MAINTAIN ACCESS TO RESIDENTS AT ALL TIMES.
2. MAINTAIN MINIMUM 12–FT LANE WIDTH AT ALL TIMES
3. REFER TO TCP STANDARD DETAILS FOR MORE INFORMATION.
4. ALONG S DAIRY ASHFORD, RICHMOND AVE SIGNS SPACING IS 160–FT, AND ALONG WESTPARK DR, SHADOWBRIAR DR, SHADOWKNOLLDR, SHADOWMIST DR & W HOUSTON CENTER SIGNS SPACING IS 120–FT
5. FROM AGAR LN TO OTTAWA LN SIGN R3–1 AND R6–1L SHALL BE PLACED AT ALL DRIVEWAY ALONG THE NORTH SIDE OF EMNORA LN, AND SIGN R3–2 AND R6–1R SHALL BE PLACED AT ALL DRIVEWAY ALONG THE SOUTH SIDE OF EMNORA LN.

N

0' 12.5' 25' 50'

SCALE: 1"=50'

Gauge ENGINEERING
11750 KATY FREEWAY SUITE 400
HOUSTON, TX 77079
TEXAS PE FIRM REG. F–20017

SURVEYED BY: AMANI ENGR.
FB NO. P–6335

KARAM QADDO
125611
LICENSED
PROFESSIONAL ENGINEER
11/13/25

CITY OF HOUSTON
HOUSTON PUBLIC WORKS

LIFT STATION REHABILITATION & RECONSTRUCTION CONSENT DECREE

EMNORA LANE DETOUR PLANS

SHEET 1 OF 1

WBS NUMBER	FOR CITY OF HOUSTON USE ONLY
R–000267–0175–4	
DRAWING SCALE	
AS NOTED	
CITY OF HOUSTON PM	
NP NAWARAJ PANTA, P.E.	
SHEET NO. 299 OF 312	

FILE PATH: P:\Arcadis\1392–CMAR\4–0–Production–Working\4–1–CAD\TCP\1392–PR–DETOUR 02.dwg
PLOT STYLE: COH.ctb PLOTTED: 11/13/2025 11:59 AM

DocuSign Envelope ID: CB71C116-B716-4899-A5EE-0D2F2CC55AF8

GENERAL NOTES

1. THE CONTRACTOR SHALL PROVIDE AND INSTALL TRAFFIC CONTROL DEVICES IN CONFORMANCE WITH PART VI OF THE TEXAS MANUAL ON UNIFORM TRAFFIC CONTROL DEVICES (TMUTCD) LATEST EDITION WITIH REVISIONS DURING THE ENTIRE CONSTRUCTION PERIOD.
2. ALL SIGNS AND TRAFFIC CONTROL DEVICES SHALL CONFORM THE LATEST VERSION OF THE TMUTCD.
3. NO LANES SHALL BE CLOSED DURING THE HOURS OF 7:00 AM TO 9:00 AM AND 4:00 PM TO 6:00 PM MONDAY THRU FRIDAY WITHOUT APPROVAL OF THE CITY TRAFFIC ENGINEER.
4. NO WORK SHALL BE PERFORMED IN RESIDENTIAL AREAS FROM 7:00 PM TO 7:00 AM.
5. CONTRACTOR SHALL MAINTAIN APPROVED NUMBER OF THROUGH LANES OF TRAFFIC IN EACH DIRECTION DURING CONSTRUCTION WORKING HOURS. TRAFFIC CONTROL PLANS SHALL INCLUDE ONE–WAY AND/OR DETOUR PLANS. CONTRACTOR SHALL MAINTAIN ADA COMPLIANT PEDESTRIAN ACCESS TO BUS STOPS AND ADEQUATE BUS ACCESS TO ALL THE BUS STOPS.
6. CONTRACTOR SHALL MAINTAIN TRAFFIC LANES AND DETOURS ACCORDING TO TRAFFIC CONTROL PLANS DURING WORKING HOURS.
7. CONTRACTOR SHALL COVER OPEN PAVEMENT EXCAVATIONS FOR MINOR UTILITY WORK WITH ANCHORED STEEL PLATES DURING NON–WORKING HOURS, AND OPEN LANES FOR NORMAL TRAFFIC FLOW WHEN FEASIBLE.
8. IF THE CONTRACTOR CHOOSES TO USE A DIFFERENT METHOD OF "TRAFFIC CONTROL PLANS" DURING THE CONSTRUCTION THAN WHAT IS OUTLINED IN THE CONTRACT DRAWINGS, THE CONTRACTOR SHALL BE RESPONSIBLE TO PREPARE AND SUBMIT AN ALTERNATE SET OF TRAFFIC CONTROL PLANS TO THE CITY OF HOUSTON PROJECT MANAGER FOR APPROVAL TEN WORKING DAYS PRIOR TO IMPLEMENTATION. THESE PLANS SHALL BE DRAWN TO SCALE ON REPRODUCIBLE MYLARS AND SHALL BE SEALED BY A LICENSED ENGINEER IN THE STATE OF TEXAS. OFFICE OF CITY ENGINEER, MOBILITY PERMITS SECTION REPRESENTATIVE APPROVAL IS REQUIRED TO ACCEPT THE PROPOSED CHANGES.
9. CONTRACTOR SHALL SECURE LANE/SIDEWALK/BICYCLE FACILITY CLOSURE PERMITS FROM OFFICE OF CITY ENGINEER (MOBILITY PERMIT SECTION AT https://geohub.houstontx.gov) BEFORE IMPLEMENTING THE TRAFFIC CONTROL PLAN. THE APPLICATION MUST BE SUBMITTED AT LEAST TEN DAYS PRIOR TO THE IMPLEMENTATION OF THE TRAFFIC CONTROL PLAN AND/OR BEGINNING CONSTRUCTION WORK. THE CONTRACTOR SHALL PROVIDE TRAFFIC CONTROL PLANS, CONSTRUCTION SEQUENCING, AND CONSTRUCTION SCHEDULE WITH THE APPLICATION.
10. CONTRACTOR SHALL HAVE APPROVED TRAFFIC CONTROL PLAN AND PERMIT AT THE JOB SITE FOR INSPECTION AT ALL TIMES.
11. DURING PAVEMENT SURFACE RESTORATION PROJECTS; THE CONTRACTOR SHALL NOT OPEN CLOSED LANES UNTIL THE PAVEMENT SURFACE HAS CURED ENOUGH TO ALLOW VEHICULAR TRAFFIC ACCORDING TO CITY OF HOUSTON STANDARD SPECIFICATIONS.
12. THE CONTRACTOR IS RESPONSIBLE FOR SCHEDULING AND COORDINATING ALL CONSTRUCTION ACTIVITIES WITH STAKE HOLDERS IN THE VICINITY INCLUDING EMERGENCY RESPONSE AGENCIES SUCH AS HOUSTON POLICE DEPARTMENT, HOUSTON FIRE DEPARTMENT, AND METROPOLITAN TRANSIT AUTHORITY.
13. CONTRACTOR SHALL BE RESPONSIBLE FOR ISSUING ALL WORK DIRECTIVES TO ALL SUB–CONTRACTORS, UTILITY COMPANIES, AND ALL OTHER ENTITIES PERFORMING CONSTRUCTION WORK ASSOCIATED WITH THE PROJECT.
14. NOTHING IN THESE NOTES OR PLANS SHALL RELIEVE THE CONTRACTOR OF THE RESPONSIBILITY FOR JOB SITE CONDITIONS DURING THE COURSE OF CONSTRUCTION OF THE PROJECT; INCLUDING SAFETY OF ALL MODES OF TRANSPORTATION, PERSONS, AND PROPERTY, AND THAT THIS REQUIREMENT SHALL APPLY CONTINUOUSLY AND NOT BE LIMITED TO WORKING HOURS.
15. THE OFFICE OF CITY ENGINEER (MOBILITY PERMITS GROUP) PER THE DIRECTION OF THE CITY TRAFFIC ENGINEER HAVE THE RIGHT TO DEMAND THE INSTALLATION OF ADDITIONAL TRAFFIC CONTROL DEVICES OR MODIFICATIONS OF THESE PLANS AND NOTES, AS DEEMED NECESSARY TO PROMOTE THE SAFE AND ORDERLY FLOW OF TRAFFIC, INCLUDING PEDESTRIANS AND BICYCLES, THROUGH THE CONSTRUCTION WORK ZONE. THE CONTRACTOR SHALL COMPLY WITH THESE ADDITIONAL REQUESTS OR MODIFICATIONS WITH DUE DILIGENCE.
16. ALL EXISTING TRAFFIC CONTROL SIGNS AND PAVEMENT MARKINGS SHALL BE MAINTAINED IN VISIBLE LOCATIONS DURING CONSTRUCTION UNLESS PRIOR WRITTEN APPROVAL IS OBTAINED FROM CITY OF HOUSTON PROJECT MANAGER. THE CONTRACTOR SHALL RESTORE OR REPLACE (AT THE DISCRETION OF THE CITY TRAFFIC ENGINEER) ANY PAVEMENT MARKING OR SIGNING DAMAGE DURING CONSTRUCTION OPERATIONS, INCLUDING RAISED PAVEMENT MARKERS (RPMS).
17. WHEN ENTERING OR LEAVING ROADWAYS CARRYING PUBLIC TRAFFIC, THE CONTRACTOR'S EQUIPMENT, WHETHER EMPTY OR LOADED SHALL IN ALL CASES YIELD TO PUBLIC TRAFFIC WITH THE ASSISTANCE OF CONTRACTOR PROVIDED CERTIFIED FLAGGER/PEACE OFFICER.
18. ACCESS TO DRIVEWAYS ADJACENT TO THE CONSTRUCTION WORK ZONE SHALL BE MAINTAINED AT ALL TIMES AS MUCH AS POSSIBLE. ADDITIONAL CONES AND/OR DELINEATORS MAY BE REQUIRED TO DELINEATE THE DRIVEWAY ACCESS ROUTE THROUGH THE CONSTRUCTION WORK ZONE. A MINIMUM OF ONE TRAVEL LANE SHALL BE MAINTAINED ACROSS THE DRIVEWAYS, UNLESS PRIOR WRITTEN APPROVAL IS OBTAINED FROM CITY OF HOUSTON PROJECT MANAGER.
19. SPILLAGE RESULTING FROM HAULING OPERATIONS ALONG OR ACROSS ANY PUBLIC TRAVELED WAY SHALL BE REMOVED IMMEDIATELY BY THE CONTRACTOR.
20. THE CONTRACTOR SHALL SUBMIT AN APPLICATION FOR TEMPORARY PARKING RESTRICTIONS IF THERE ARE PARKING METERS LOCATED AT THE PROPOSED LANE CLOSURES FROM PARKING MANAGEMENT DIVISION (832–393–8690) AT LEAST TEN BUSINESS DAYS BEFORE IMPLEMENTATION OF LANE CLOSURES. IN ADDITION, TEMPORARY NO PARKING SIGNS SHALL BE POSTED 24 HOURS PRIOR TO COMMENCEMENT OF WORK.
21. ADDITIONAL OFF DUTY OFFICERS/FLAGGERS MAY BE REQUESTED TO DIRECT TRAFFIC WHEN LANES ARE BLOCKED AT THE DISCRETION OF THE CITY PROJECT MANAGER EVEN IF THEY ARE NOT SPECIFICALLY IDENTIFIED ON THE PROJECT PLANS.
22. THE CONTRACTOR SHALL REPLACE WITHIN 72 HOURS, ALL TRAFFIC SIGNAL LOOP DETECTORS DAMAGED DURING CONSTRUCTION.
23. IN GENERAL, A SOLAR POWERED FLASHING ARROW BOARD SHALL BE REQUIRED ON ALL MAJOR THOROUGHFARE LANES CLOSURES. EXCEPTIONS TO FLASHING ARROW BOARDS AND/OR IMPLEMENTATION ON RESIDENTIAL LANE CLOSURES SHALL BE APPROVED BY CITY TRAFFIC ENGINEER.
24. APPROVED TRAFFIC CONTROL PLAN SHALL BE IN PLACE BEFORE STARTING ANY EXCAVATION.
25. WATER FILLED BARRIERS CAN BE USED AS INSTRUCTED BY THE ENGINEER AND APPROVED BY THE CITY FOR PROJECTS WHERE SPACE IS LIMITED AND HEAVY EQUIPMENT TO PLACE CONCRETE BARRIERS IS NOT FEASIBLE. WATER FILLED BARRIERS SHALL NOT BE USED ON ROADWAYS WITH A POSTED SPEED LIMIT MORE THAN 45 MPH.
26. WATER FILLED BARRIERS MUST BE INSTALLED AND MAINTAINED PER THE MANUFACTURER'S REQUIREMENTS AND ROUTINELY INSPECTED FOR DEFECTS.
27. IF WATER FILLED BARRIER IS PROVIDED, USE ENVIRONMENTALLY SAFE ANTI–FREEZING AGENT IN THE WATER WHEN IT IS APPLICABLE PER MANUFACTURER SPECIFICATIONS AND RECOVER AGENT WHEN THE BARRIER IS DRAINED.
28. DISPOSE OF WATER AND AGENT PROPERLY. DO NOT DRAIN WATER FILLED BARRIER INTO OR ACROSS AN EXISTING TRAVEL LANE.
29. PROVIDE BARRIER UNITS THAT ARE CAPABLE OF BEING LIFTED AND MOVED WHEN FILLED IF DRAINING IS NOT POSSIBLE.
30. PROVIDE WATER FILLED BARRIER THAT ACTS AS ITS OWN FREE STANDING, NON–REDIRECTIVE END TREATMENT.
31. WHEN WATER FILLED BARRIERS ARE USED TO CHANNELIZE PEDESTRIANS, THEY MUST HAVE A CONTINUOUS DETECTABLE BOTTOM FOR USERS OF LONG CANES AND THE TOP OF THE UNIT SHALL NOT BE LESS THAN 32 INCHES IN HEIGHT.
32. ANY CLOSURE OF A PEDESTRIAN OR BICYCLE FACILITY SHALL REQUIRE THE SHORTEST DETOUR THAT MAINTAINS THE SAFETY OF PEDESTRIAN AND/OR BICYCLISTS.

SPACING FOR CHANNELIZING DEVICES

A. PLASTIC DRUMS ON MERGING TAPER @ 30' C – C WITH CHEVRON SIGN @ 60' C – C AND WARNING LIGHTS FOR OVERNIGHT CLOSURE.

B. PLASTIC DRUMS ON DOWNSTREAM TAPER @ 30' C – C (RETURN TAPER AND BARRICADE ARE OPTIONAL AND DIVIDED ROADWAY SECTION)

C. PLASTIC DRUMS ON RADII @ 35' C –C.

D. PLASTIC DRUMS ON TANGENT @ 35' C – C WITH VERTICAL PANEL AT 70' C – C AND APPROVED WARNING LIGHT @ 70' C – C (FOR OVERNIGHT CLOSURE).

E. PLASTIC DRUMS IN FRONT OF CONSTRUCTION ZONE @ 20' C – C WITH VERTICAL PANEL AT 40' C – C AND APPROVED WARNING LIGHT @ 40' C – C (FOR OVERNIGHT CLOSURE).

F. CONCRETE TRAFFIC BARRIER (CTB) OR LOW PROFILE CONCRETE TRAFFIC BARRIER (LPCTB) WITH APPROVED REFLECTORS @ 10' C – C IF PAVEMENT DROP IS GREATER THAN 1 FOOT.

G. PLASTIC DRUMS W/GUARD RAIL MOUNTED.

H. SELF– RIGHTING VERTICAL PANEL SPACING.
– 4 LANES TO 2 LANES UNDIVIDED ROADWAY SECTION @ 20' C – C.
– 4 LANES DIVIDED ROADWAY TO ONE SIDE TWO WAY ROADWAY @ 20' C – C.
– LEFT LANE AND RIGHT LANE STORAGE BAYS @ 15' C – C.

I. SPACING SHOWN ON TRAFFIC CONTROL SHALL SUPERSEDE THE ABOVE SPACING.

J. SPACING MAY BE ADJUSTED TO PROVIDE DRIVEWAYS, INTERSECTIONS AND /OR MEDIAN OPENINGS.

TABLE C3 – TYPICAL SIGN SPACING, TAPER LENGTHS, AND SUGGESTED SPACING OF CHANNELIZATION DEVICES

POSTED SPEED (MPH)	SIGN SPACING "X" (FEET)	MIN. DESIRABLE TAPER LENGTH "L"			SUGGESTED MAXIMUM SPACING OF DEVICE	
		10' OFFSET	11' OFFSET	12' OFFSET	ON A TAPER	ON A TANGENT
30	120'	150'	165'	180'	30'	60'–75'
35	160'	205'	225'	245'	35'	70'–90'
40	240'	265'	295'	320'	40'	80'–100'
45	320'	450'	495'	540'	45'	90'–110'
50	400'	500'	550'	600'	50'	100'–125'
55	500'	550'	605'	660'	55'	110'–140'

TABLE C4 – STOPPING SIGHT DISTANCE AS A FUNCTION OF SPEED

POSTED SPEED (MPH)	DISTANCE "D" (FEET)
30	200
35	250
40	305
45	360
50	425
55	495

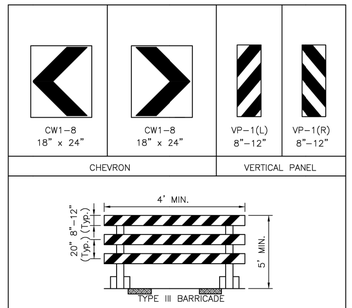

CHANNELIZATION AND BARRICADES

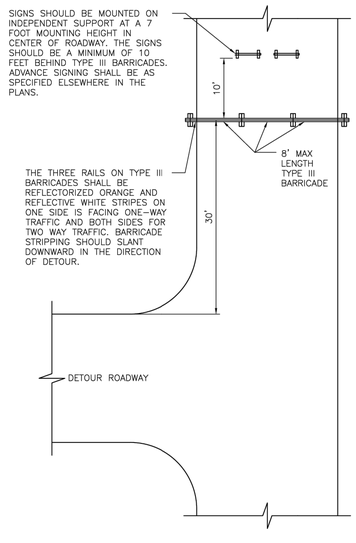

PLAN VIEW
TYPE III BARRICADE (POST AND SKID)
TYPICAL APPLICATION

LEGEND:

- SIGN
- FLAGGER
- APPROVED CHANNELIZATION DEVICE
- BARRICADE
- FLASHING ARROW PANEL
- AREA UNDER CONSTRUCTION
- EXISTING TRAVEL WAY
- TRAFFIC CONTROL PLAN DETOUR TRAVEL WAY

APPROVED BY:	APPROVED BY:
DocuSigned by: Suhail Kanwar 8EF8B0C64191478...	DocuSigned by: LONG NGUYEN 95A29EF0A57B4C0...
CITY ENGINEER	CITY TRAFFIC ENGINEER
APPROVED BY: DocuSigned by: Carl Haddock 46BDC41E8F7B4A8...	
DIRECTOR OF HOUSTON PUBLIC WORKS	
EFF DATE: NOV–27–2023	DWG NO: 01555–01

CITY OF HOUSTON
HOUSTON PUBLIC WORKS STANDARD

TCP NOTES CHANNELIZING DEVICES AND BARRICADES

	FOR CITY OF HOUSTON USE ONLY
DRAWING SCALE	
NOT TO SCALE	

Gauge ENGINEERING
11750 KATY FREEWAY SUITE 400
HOUSTON, TX 77079
TEXAS PE FIRM REG. F–20017

SURVEYED BY: AMANI ENGR.
FB NO. P–6335

STATE OF TEXAS
KARAM QADDO
125611
LICENSED PROFESSIONAL ENGINEER
11/13/25

CITY OF HOUSTON
HOUSTON PUBLIC WORKS

LIFT STATION REHABILITATION & RECONSTRUCTION CONSENT DECREE

TRAFFIC CONTROL STANDARD DETAILS

SHEET 1 OF 9

WBS NUMBER	FOR CITY OF HOUSTON USE ONLY
R–000267–0175–4	
DRAWING SCALE	
AS NOTED	
CITY OF HOUSTON PM	
NP NAWARAJ PANTA, P.E.	
SHEET NO. 300 OF 312	

NO.	DATE	REVISION	APP.

DISCLAIMER:
THE USE OF THIS STANDARD IS GOVERNED BY THE TEXAS ENGINEERING PRACTICE ACT. THE DESIGN REQUIREMENTS ON THIS STANDARD DO NOT PURPORT TO ADDRESS ALL OF THE SAFETY CONCERNS ASSOCIATED WITH THEIR USE. THE ENGINEER OF RECORD (EOR) IS TO REVIEW THESE DESIGN REQUIREMENTS AND BY AUTHORIZING THEIR USE, ACCEPTS RESPONSIBILITY FOR THEIR APPLICABILITY, ADEQUACY AND SAFETY. NO WARRANTY OF ANY KIND IS MADE BY THE CITY OF HOUSTON FOR ANY PURPOSES WHATSOEVER. THE CITY OF HOUSTON ASSUMES NO RESPONSIBILITY FOR INCORRECT RESULTS OR DAMAGES RESULTING FROM ITS USE.

FILE PATH: P:\Arcadis\1392–CMAR\4–0–Production–Working\4–1–CAD\TCP\1392–TCP SD.dwg
PLOT STYLE: COH.ctb PLOTTED: 11/13/2025 12:06 PM

DocuSign Envelope ID: CB71C116-B716-4899-A5EE-0D2F2CC55AF6

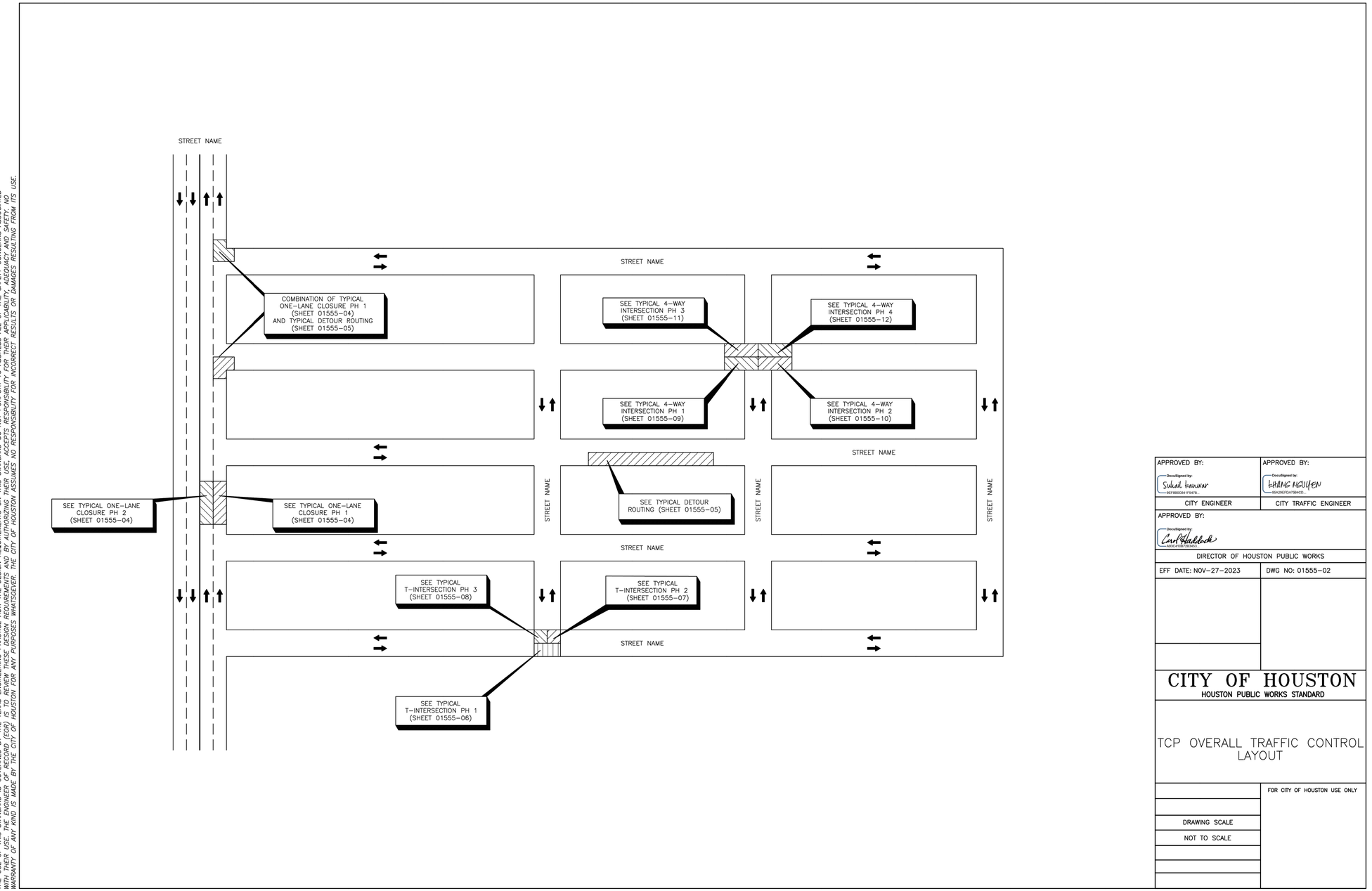

APPROVED BY:	APPROVED BY:
DocuSigned by: Sulaat Iranwar 9EF8B60C641F547B...	DocuSigned by: bifang Wolfen 95A26EFDA75B44CD...
CITY ENGINEER	CITY TRAFFIC ENGINEER
APPROVED BY: DocuSigned by: Carl Haddock A80C4198772B3453...	
DIRECTOR OF HOUSTON PUBLIC WORKS	
EFF DATE: NOV-27-2023	DWG NO: 01555-02

CITY OF HOUSTON
HOUSTON PUBLIC WORKS STANDARD

TCP OVERALL TRAFFIC CONTROL LAYOUT

	FOR CITY OF HOUSTON USE ONLY
DRAWING SCALE	
NOT TO SCALE	

NO.	DATE	REVISION	APP.

Gauge ENGINEERING
11750 KATY FREEWAY SUITE 400
HOUSTON, TX 77079
TEXAS PE FIRM REG. F-20017

SURVEYED BY: AMANI ENGR.
FB NO. P-6335

STATE OF TEXAS · KARAM QADDO · 125611 · LICENSED PROFESSIONAL ENGINEER
11/13/25

CITY OF HOUSTON
HOUSTON PUBLIC WORKS

LIFT STATION REHABILITATION & RECONSTRUCTION CONSENT DECREE

TRAFFIC CONTROL STANDARD DETAILS

SHEET 2 OF 9

WBS NUMBER	FOR CITY OF HOUSTON USE ONLY
R-000267-0175-4	
DRAWING SCALE	
AS NOTED	
CITY OF HOUSTON PM	
NP NAWARAJ PANTA, P.E.	
SHEET NO. 301 OF 312	

DISCLAIMER:
THE USE OF THIS STANDARD IS GOVERNED BY THE TEXAS ENGINEERING PRACTICE ACT. THE DESIGN REQUIREMENTS ON THIS STANDARD DO NOT PURPORT TO ADDRESS ALL OF THE SAFETY CONCERNS ASSOCIATED WITH THEIR USE. IT IS THE RESPONSIBILITY OF THE ENGINEER OF RECORD (EOR) TO DESIGN, DETAIL, AND SPECIFY THE REQUIREMENTS FOR HIS OR HER PROJECT. CITY OF HOUSTON (COH) PROVIDES THESE STANDARDS AS A GUIDE TO ASSIST THE EOR IN PREPARING CONSTRUCTION DOCUMENTS THAT ARE CONSISTENT WITH COH PRACTICES. HOWEVER, THE EOR IS RESPONSIBLE FOR DESIGN AND DETAILS THAT ARE APPROPRIATE FOR THE SITE CONDITIONS. COH DOES NOT WARRANT THE SUITABILITY OF THESE STANDARDS FOR ANY PARTICULAR USE OR CIRCUMSTANCE. BY PROVIDING THESE STANDARDS, COH ASSUMES NO RESPONSIBILITY FOR INCORRECT RESULTS OR DAMAGES RESULTING FROM ITS USE.
WARRANTY OF ANY KIND IS MADE BY THE CITY OF HOUSTON FOR ANY PURPOSES WHATSOEVER. THE CITY OF HOUSTON ASSUMES NO RESPONSIBILITY

FILE PATH: P:\Arcadis\1392-CMAR\4-0-Production-Working\4-1-CAD\TCP\1392-TCP SD.dwg
PLOT STYLE: COH.ctb PLOTTED: 11/13/2025 12:06 PM

DocuSign Envelope ID: CB71C116-B716-4899-A5EE-0D2F2CC55AF6

A	D	I	J
CW20-1	G20-2	AHEAD CW20-5(2) CW16-3	AHEAD CW20-5(1) CW16-3

PHASE 1

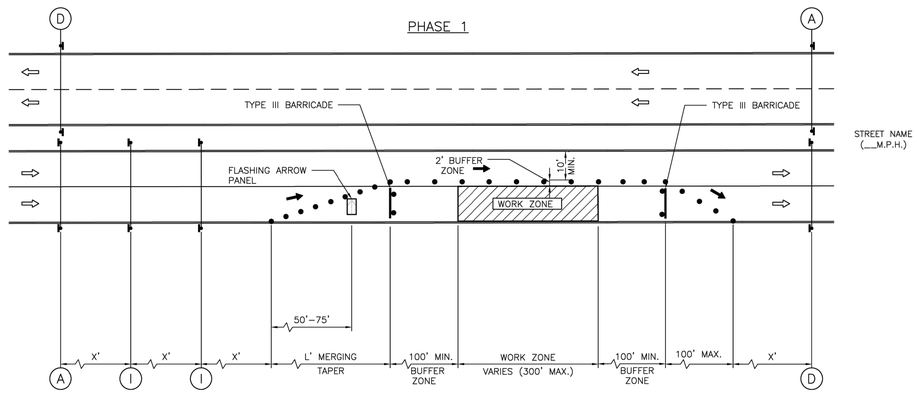

PHASE 2

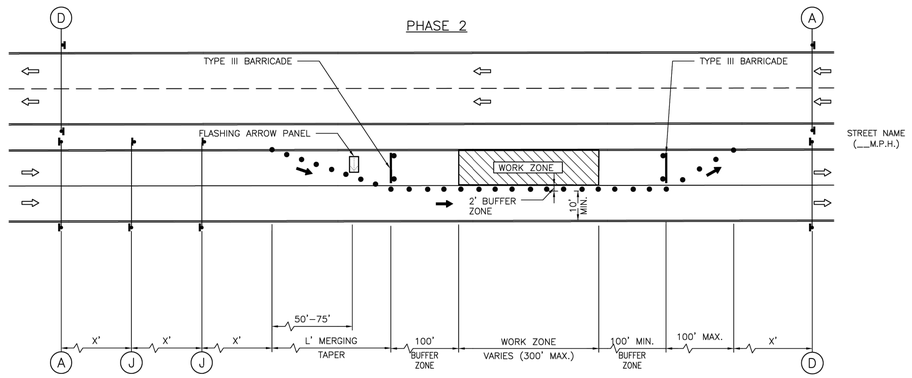

LEGEND:

- SIGN
- FLAGGER
- APPROVED CHANNELIZATION DEVICE
- BARRICADE
- FLASHING ARROW PANEL
- AREA UNDER CONSTRUCTION
- EXISTING TRAVEL WAY
- TRAFFIC CONTROL PLAN DETOUR TRAVEL WAY

NOTES:

1. RETURN TAPERS AND DOWNSTREAM BARRICADES ARE OPTIONAL ON A DIVIDED ROADWAY SECTION.
2. DOUBLE SIGNS SHALL BE USED ONLY ON ROADWAYS WITH MEDIANS.
3. FOR DIMENSIONS REFER TO SHEET 01555–01.
4. INSTALL FLASHERS ON DRUMS WHERE REQUIRED AND APPROVED BY CITY TRAFFIC ENGINEER.

NO.	DATE	REVISION	APP.

APPROVED BY:	APPROVED BY:
Docusigned by: Sulad Kauwar — 8CF5B5C8415A478...	Docusigned by: HANG NGUYEN — 5BADB5E5A7B84CD...
CITY ENGINEER	CITY TRAFFIC ENGINEER
APPROVED BY: Docusigned by: Carl Haddock — A80C4100738D453...	
DIRECTOR OF HOUSTON PUBLIC WORKS	
EFF DATE: NOV-27-2023	DWG NO: 01555-04

CITY OF HOUSTON
HOUSTON PUBLIC WORKS STANDARD

TCP ONE LANE CLOSURE
PHASE 1 & 2

	FOR CITY OF HOUSTON USE ONLY
DRAWING SCALE	
NOT TO SCALE	

Gauge ENGINEERING
11750 KATY FREEWAY SUITE 400
HOUSTON, TX 77079
TEXAS PE FIRM REG. F-20017

SURVEYED BY: AMANI ENGR.
FB NO. P-6335

11/13/25

CITY OF HOUSTON
HOUSTON PUBLIC WORKS

LIFT STATION REHABILITATION & RECONSTRUCTION CONSENT DECREE

TRAFFIC CONTROL STANDARD DETAILS

SHEET 3 OF 9

WBS NUMBER	FOR CITY OF HOUSTON USE ONLY
R-000267-0175-4	
DRAWING SCALE	
AS NOTED	
CITY OF HOUSTON PM	
NP NAWARAJ PANTA, P.E.	
SHEET NO. 302 OF 312	

DISCLAIMER:
THE USE OF THIS STANDARD IS GOVERNED BY THE TEXAS ENGINEERING PRACTICE ACT. THE DESIGN REQUIREMENTS ON THIS STANDARD DO NOT PURPORT TO ADDRESS ALL OF THE SAFETY CONCERNS ASSOCIATED WITH THEIR USE. THE ENGINEER OF RECORD (EOR) IS TO REVIEW THESE DESIGN REQUIREMENTS AND BY AUTHORIZING THEIR USE, ACCEPTS RESPONSIBILITY FOR THEIR APPLICABILITY, ADEQUACY AND SAFETY. NO WARRANTY OF ANY KIND IS MADE BY THE CITY OF HOUSTON FOR ANY PURPOSES WHATSOEVER. THE CITY OF HOUSTON ASSUMES NO RESPONSIBILITY FOR INCORRECT RESULTS OR DAMAGES RESULTING FROM ITS USE.

FILE PATH: P:\Arcadis\1392-CMAR\4-0-Production-Working\4-1-CAD\TCP\1392-TCP SD.dwg
PLOT STYLE: COH.ctb PLOTTED: 11/13/2025 12:06 PM

DocuSign Envelope ID: CB71C116-B716-4899-A5EE-0D2F2CC55AF6

NO.	DATE	REVISION	APP.

A	B	C	D	E	F	G	H	I	J	
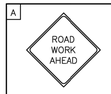										
CW20–1	CW20–3	CW20–2	G20–2	M4–9R	M4–9L	M4–8a	M4–9T	CW20–5(2) CW16–3	CW20–5(1) CW16–3	
K	L	M	N	O	P	Q	R			
R6–2(L)	R6–2(R)	R5–1	R11–2	M4–10(L)	R3–1	R3–2	R6–6			

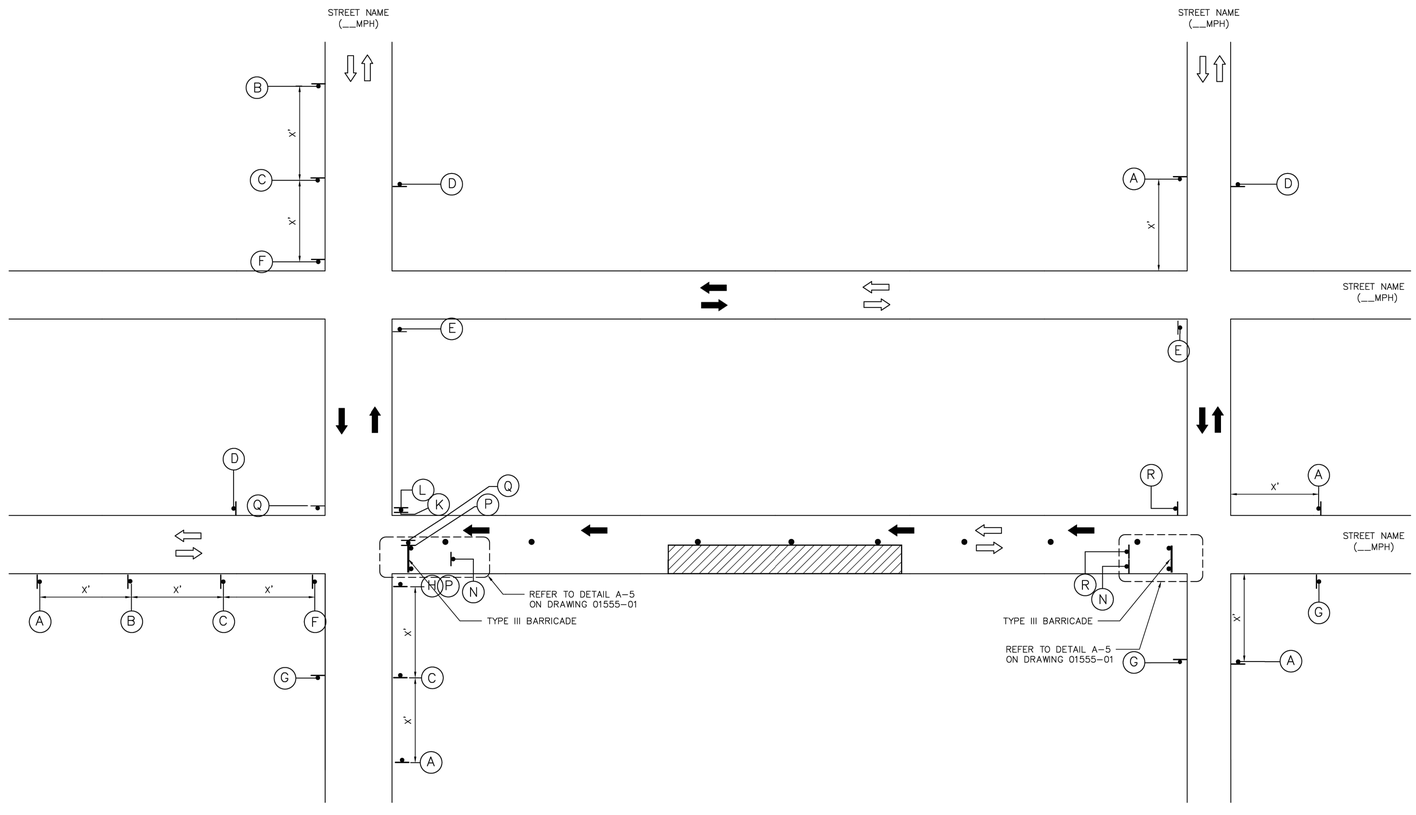

LEGEND:

- SIGN
- FLAGGER
- APPROVED CHANNELIZATION DEVICE
- BARRICADE
- FLASHING ARROW PANEL
- AREA UNDER CONSTRUCTION
- EXISTING TRAVEL WAY
- TRAFFIC CONTROL PLAN DETOUR TRAVEL WAY

NOTES:

1. A 10' MINIMUM LANE WIDTH FOR EMERGENCY SHALL BE MADE AVAILABLE AND MAINTAINED BY THE CONTRACTOR AT ALL TIMES.
2. FOR DIMENSIONS REFER TO SHEET 01555–01.
3. INSTALL FLASHERS ON DRUMS WHERE REQUIRED AND APPROVED BY CITY TRAFFIC ENGINEER.

APPROVED BY:	APPROVED BY:
Docusigned by: Suhail Kanwar 9EFB90C841F5478...	Docusigned by: KEHING NGUYEN 95A29EFDA75B4CD...
CITY ENGINEER	CITY TRAFFIC ENGINEER
APPROVED BY: Docusigned by: Carl Haddock 4B9C81EB7ED4A3...	
DIRECTOR OF HOUSTON PUBLIC WORKS	
EFF DATE: NOV–27–2023	DWG NO: 01555–05

CITY OF HOUSTON
HOUSTON PUBLIC WORKS STANDARD

TCP TYPICAL DETOUR ROUTING WITH ONE LANE CLOSURE (ONE BLOCK)

FOR CITY OF HOUSTON USE ONLY

DRAWING SCALE
NOT TO SCALE

Gauge ENGINEERING
11750 KATY FREEWAY SUITE 400
HOUSTON, TX 77079
TEXAS PE FIRM REG. F–20017

SURVEYED BY: AMANI ENGR.
FB NO. P–6335

11/13/25

CITY OF HOUSTON
HOUSTON PUBLIC WORKS

LIFT STATION REHABILITATION & RECONSTRUCTION CONSENT DECREE

TRAFFIC CONTROL STANDARD DETAILS

SHEET 4 OF 9

WBS NUMBER	FOR CITY OF HOUSTON USE ONLY
R–000267–0175–4	
DRAWING SCALE	
AS NOTED	
CITY OF HOUSTON PM	
NP NAWARAJ PANTA, P.E.	
SHEET NO. 303 OF 312	

DISCLAIMER:
THE USE OF THIS STANDARD IS GOVERNED BY THE TEXAS ENGINEERING PRACTICE ACT. THE DESIGN REQUIREMENTS ON THIS STANDARD DO NOT PURPORT TO ADDRESS ALL OF THE SAFETY CONCERNS ASSOCIATED WITH THEIR USE. THE ENGINEER OF RECORD (EOR) IS TO REVIEW THESE DESIGN REQUIREMENTS AND BY AUTHORIZING THEIR USE, ACCEPTS RESPONSIBILITY FOR THEIR APPLICABILITY, ADEQUACY AND SAFETY. NO WARRANTY OF ANY KIND IS MADE BY THE CITY OF HOUSTON FOR ANY PURPOSES WHATSOEVER. THE CITY OF HOUSTON ASSUMES NO RESPONSIBILITY FOR INCORRECT RESULTS OR DAMAGES RESULTING FROM ITS USE.

FILE PATH: P:\Arcadis\1392–CMAR\4–0–Production–Working\4–1–CAD\TCP\1392–TCP SD.dwg
PLOT STYLE: COH.ctb PLOTTED: 11/13/2025 12:06 PM

DocuSign Envelope ID: CB71C116-B716-4899-A5EE-0D2F2CC55AF6

NO.	DATE	REVISION	APP.

A	T	U	D
		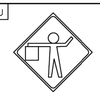	
CW20–1	CW20–4	CW20–7	G20–2
M	N		
	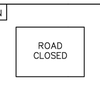		
R5–1	R11–2		

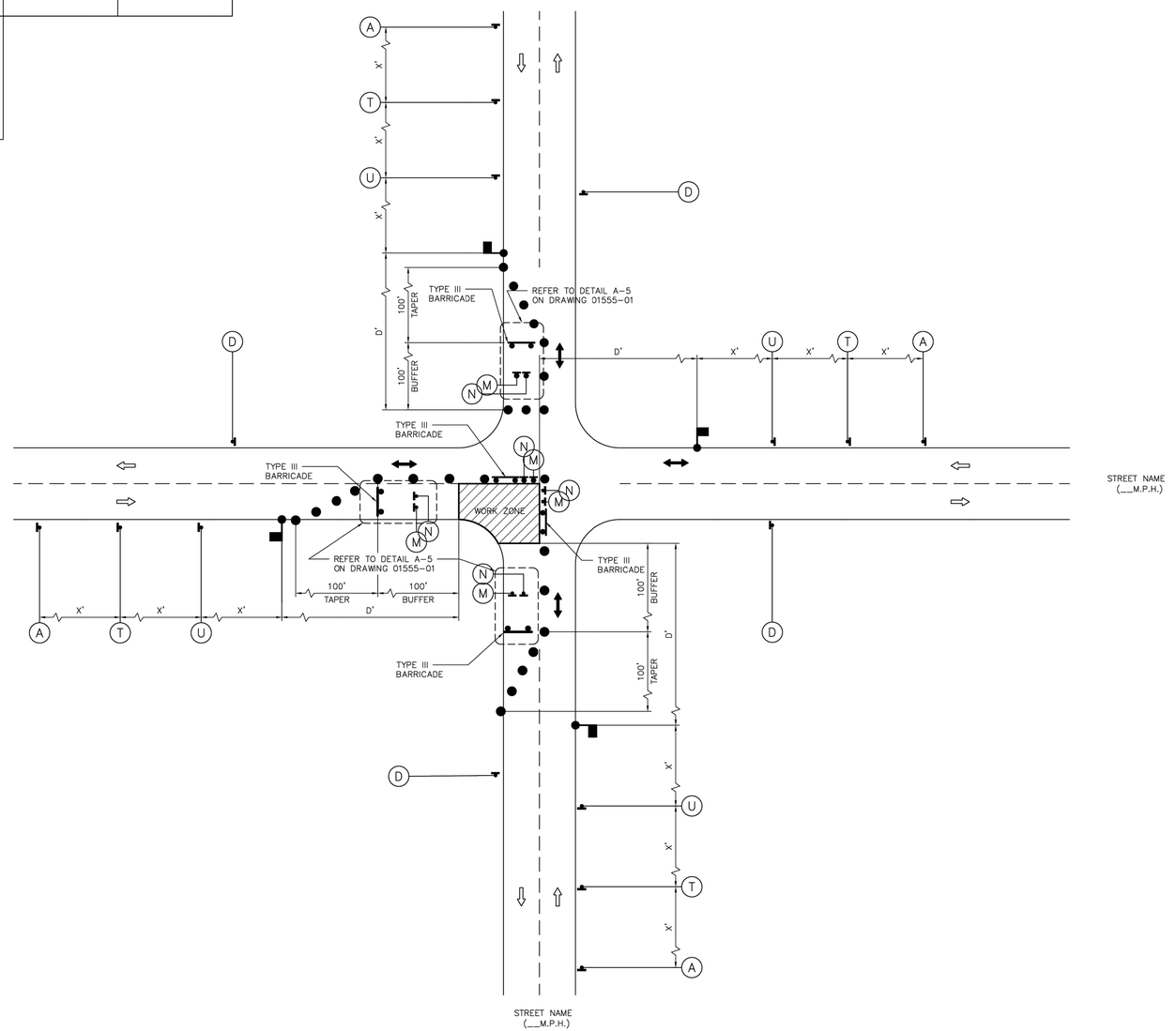

LEGEND:

- SIGN
- FLAGGER
- APPROVED CHANNELIZATION DEVICE
- BARRICADE
- FLASHING ARROW PANEL
- AREA UNDER CONSTRUCTION
- EXISTING TRAVEL WAY
- TRAFFIC CONTROL PLAN DETOUR TRAVEL WAY

NOTES:

1. MINOR WORK AND DAYTIME OPERATIONS ONLY.
2. REFER TO PROJECT SPECIFIC TRAFFIC CONTROL PLANS FOR MAJOR OPERATIONS AND OVERNIGHT LANE CLOSURES.
3. FOR DIMENSIONS REFER TO SHEET 01555–01.
4. INSTALL FLASHERS ON DRUMS WHERE REQUIRED AND APPROVED BY CITY TRAFFIC ENGINEER.
5. MAX. 100' WORK ZONE AT A TIME.

APPROVED BY:	APPROVED BY:
DocuSigned by: Sulaiman Kanwar	DocuSigned by: Kathling McMillan
CITY ENGINEER	CITY TRAFFIC ENGINEER
APPROVED BY: DocuSigned by: Carol Haddock	
DIRECTOR OF HOUSTON PUBLIC WORKS	
EFF DATE: NOV–27–2023	DWG NO: 01555–09

CITY OF HOUSTON
HOUSTON PUBLIC WORKS STANDARD

TCP TYPICAL CONSTRUCTION ZONE AT A 4–WAY INTERSECTION (LOW VOLUME TRAFFIC) PHASE 1 OF 4

DRAWING SCALE	FOR CITY OF HOUSTON USE ONLY
NOT TO SCALE	

Gauge ENGINEERING
11750 KATY FREEWAY SUITE 400
HOUSTON, TX 77079
TEXAS PE FIRM REG. F–20017

SURVEYED BY: AMANI ENGR.
FB NO. P–6335

11/13/25

CITY OF HOUSTON
HOUSTON PUBLIC WORKS

LIFT STATION REHABILITATION & RECONSTRUCTION CONSENT DECREE

TRAFFIC CONTROL STANDARD DETAILS

SHEET 5 OF 9

WBS NUMBER	FOR CITY OF HOUSTON USE ONLY
R–000267–0175–4	
DRAWING SCALE	
AS NOTED	
CITY OF HOUSTON PM	
NP NAWARAJ PANTA, P.E.	
SHEET NO. 304 OF 312	

DISCLAIMER:
THE USE OF THIS STANDARD IS GOVERNED BY THE TEXAS ENGINEERING PRACTICE ACT. THE DESIGN REQUIREMENTS ON THIS STANDARD DO NOT PURPORT TO ADDRESS ALL OF THE SAFETY CONCERNS ASSOCIATED WITH THEIR USE. THE ENGINEER OF RECORD (EOR) IS TO REVIEW THESE DESIGN REQUIREMENTS AND BY AUTHORIZING THEIR USE ACCEPTS RESPONSIBILITY FOR THEIR APPLICABILITY, ADEQUACY AND SAFETY. NO WARRANTY OF ANY KIND IS MADE BY THE CITY OF HOUSTON FOR ANY PURPOSES WHATSOEVER. THE CITY OF HOUSTON ASSUMES NO RESPONSIBILITY FOR INCORRECT RESULTS OR DAMAGES RESULTING FROM ITS USE.

FILE PATH: P:\Arcadis\1392–CMAR\4–0–Production–Working\4–1–CAD\TCP\1392–TCP SD.dwg
PLOT STYLE: COH.ctb PLOTTED: 11/13/2025 12:06 PM

DocuSign Envelope ID: CB71C116-B716-4899-A5EE-0D2F2CC55AF6

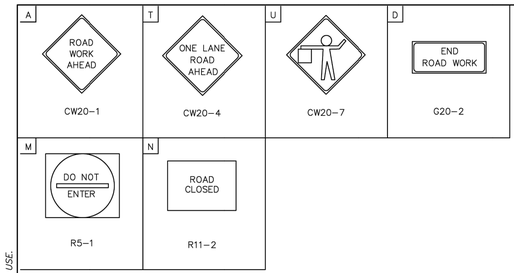

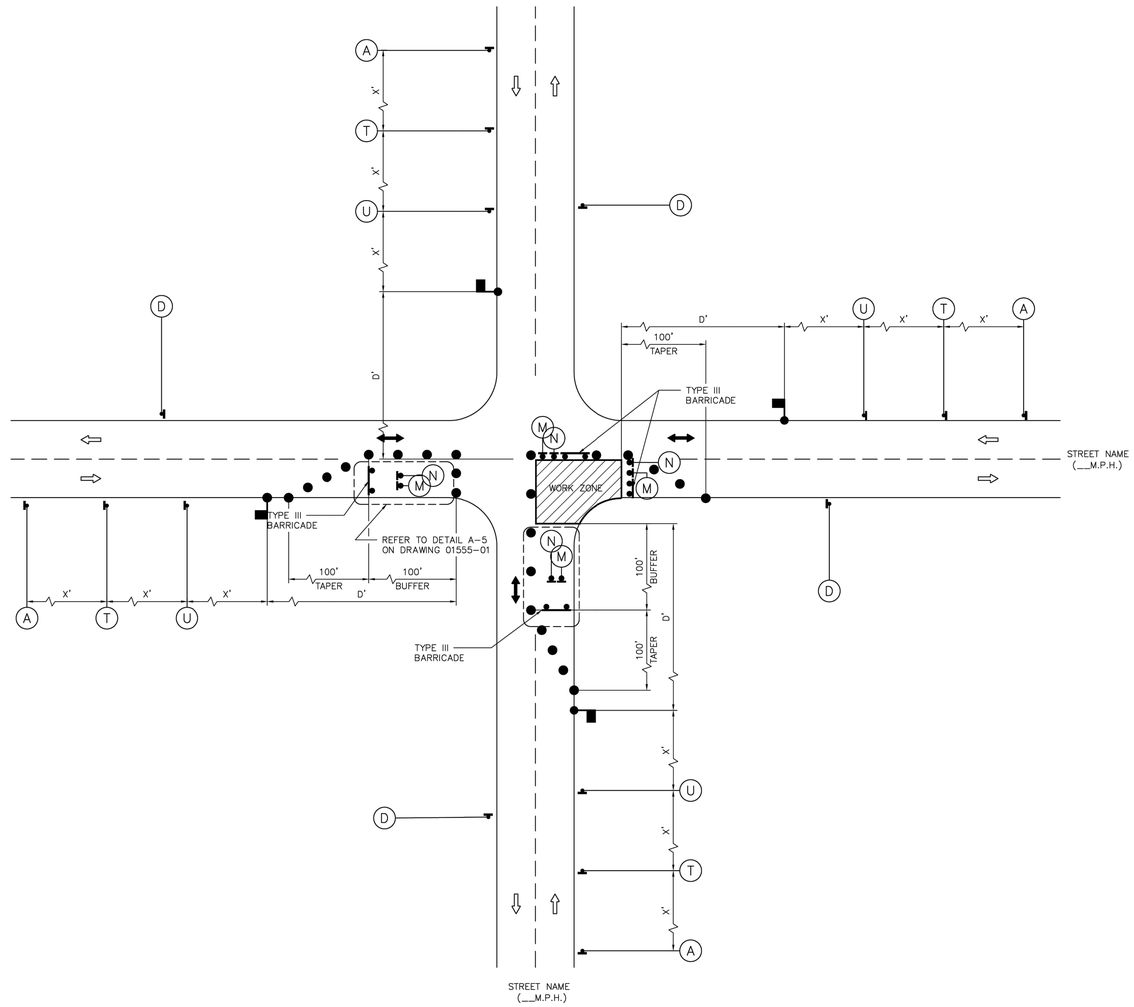

LEGEND:

- SIGN
- FLAGGER
- APPROVED CHANNELIZATION DEVICE
- BARRICADE
- FLASHING ARROW PANEL
- AREA UNDER CONSTRUCTION
- EXISTING TRAVEL WAY
- TRAFFIC CONTROL PLAN DETOUR TRAVEL WAY

NOTES:

1. MINOR WORK AND DAYTIME OPERATIONS ONLY.
2. REFER TO PROJECT SPECIFIC TRAFFIC CONTROL PLANS FOR MAJOR OPERATIONS AND OVERNIGHT LANE CLOSURES.
3. FOR DIMENSIONS REFER TO SHEET 01555-01.
4. INSTALL FLASHERS ON DRUMS WHERE REQUIRED AND APPROVED BY CITY TRAFFIC ENGINEER.
5. MAX. 100' WORK ZONE AT A TIME.

APPROVED BY:	APPROVED BY:
DocuSigned by: Sukail Kanwar 9EFBB0C6A1F5478...	DocuSigned by: KHANG NGUYEN 95A29EFDA75B4CD...
CITY ENGINEER	CITY TRAFFIC ENGINEER
APPROVED BY: DocuSigned by: Carl Haddock A90C410B7203403...	
DIRECTOR OF HOUSTON PUBLIC WORKS	
EFF DATE: NOV-27-2023	DWG NO: 01555-10

CITY OF HOUSTON
HOUSTON PUBLIC WORKS STANDARD

TCP TYPICAL CONSTRUCTION ZONE AT A 4-WAY INTERSECTION (LOW VOLUME TRAFFIC) PHASE 2 OF 4

FOR CITY OF HOUSTON USE ONLY

DRAWING SCALE

NOT TO SCALE

Gauge ENGINEERING
11750 KATY FREEWAY SUITE 400
HOUSTON, TX 77079
TEXAS PE FIRM REG. F-20017

SURVEYED BY: AMANI ENGR.
FB NO. P-6335

STATE OF TEXAS
KARAM QADDO
125611
LICENSED PROFESSIONAL ENGINEER
11/13/25

CITY OF HOUSTON
HOUSTON PUBLIC WORKS

LIFT STATION REHABILITATION & RECONSTRUCTION CONSENT DECREE

TRAFFIC CONTROL STANDARD DETAILS

SHEET 6 OF 9

WBS NUMBER	FOR CITY OF HOUSTON USE ONLY
R-000267-0175-4	
DRAWING SCALE	
AS NOTED	
CITY OF HOUSTON PM	
NP NAWARAJ PANTA, P.E.	
SHEET NO. 305 OF 312	

NO.	DATE	REVISION	APP.

DISCLAIMER:
THE USE OF THIS STANDARD IS GOVERNED BY THE TEXAS ENGINEERING PRACTICE ACT. THE DESIGN REQUIREMENTS ON THIS STANDARD DO NOT PURPORT TO ADDRESS ALL OF THE SAFETY CONCERNS ASSOCIATED WITH THEIR USE. THE ENGINEER OF RECORD (EOR) IS TO REVIEW THESE DESIGN REQUIREMENTS AND BY AUTHORIZING THEIR USE, ACCEPTS RESPONSIBILITY FOR THEIR APPLICABILITY, ADEQUACY AND SAFETY. NO WARRANTY OF ANY KIND IS MADE BY THE CITY OF HOUSTON FOR ANY PURPOSES WHATSOEVER. THE CITY OF HOUSTON ASSUMES NO RESPONSIBILITY FOR INCORRECT RESULTS OR DAMAGES RESULTING FROM ITS USE.

FILE PATH: P:\Arcadis\1392-CMAR\4-0-Production-Working\4-1-CAD\TCP\1392-TCP SD.dwg
PLOT STYLE: COH.ctb PLOTTED: 11/13/2025 12:06 PM

DocuSign Envelope ID: CB71C116-B716-4899-A5EE-0D2F2CC55AF6

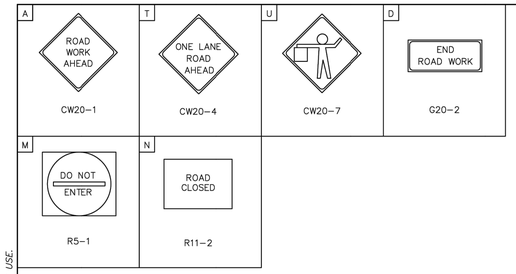

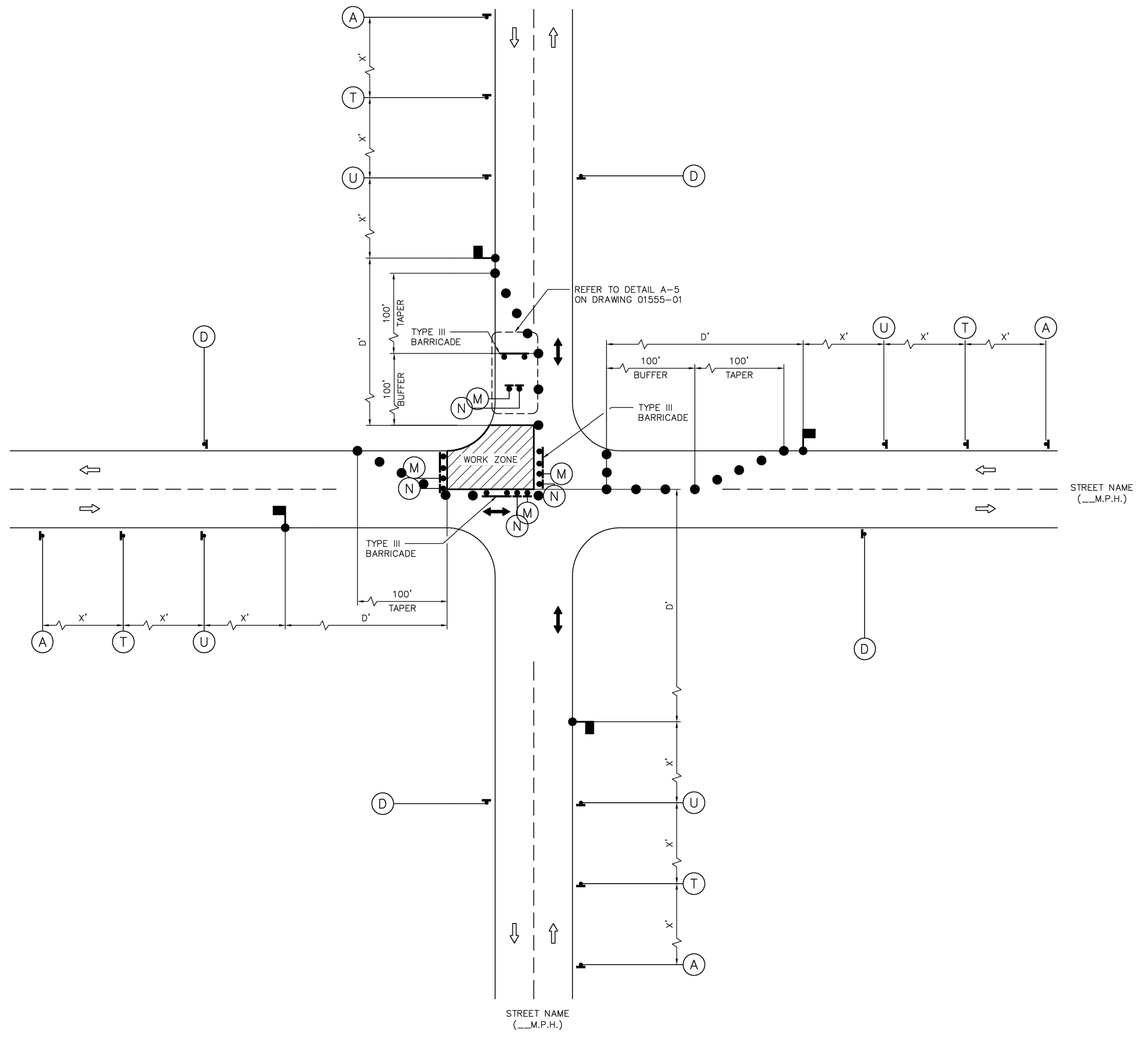

LEGEND:

- SIGN
- FLAGGER
- APPROVED CHANNELIZATION DEVICE
- BARRICADE
- FLASHING ARROW PANEL
- AREA UNDER CONSTRUCTION
- EXISTING TRAVEL WAY
- TRAFFIC CONTROL PLAN DETOUR TRAVEL WAY

NOTES:

1. MINOR WORK AND DAYTIME OPERATIONS ONLY.
2. REFER TO PROJECT SPECIFIC TRAFFIC CONTROL PLANS FOR MAJOR OPERATIONS AND OVERNIGHT LANE CLOSURES.
3. FOR DIMENSIONS REFER TO SHEET 01555-01.
4. INSTALL FLASHERS ON DRUMS WHERE REQUIRED AND APPROVED BY CITY TRAFFIC ENGINEER.
5. MAX. 100' WORK ZONE AT A TIME.

APPROVED BY:	APPROVED BY:
DocuSigned by: Suhail Kanwar 9EFB80C6417F478...	DocuSigned by: KHANG NGUYEN 95A29EFDA7BB4CD...
CITY ENGINEER	CITY TRAFFIC ENGINEER
APPROVED BY: DocuSigned by: Carl Haddock A80C4108F283453...	
DIRECTOR OF HOUSTON PUBLIC WORKS	
EFF DATE: NOV-27-2023	DWG NO: 01555-11

CITY OF HOUSTON
HOUSTON PUBLIC WORKS STANDARD

TCP TYPICAL CONSTRUCTION ZONE AT A 4-WAY INTERSECTION (LOW VOLUME TRAFFIC) PHASE 3 OF 4

FOR CITY OF HOUSTON USE ONLY

DRAWING SCALE
NOT TO SCALE

Gauge ENGINEERING
11750 KATY FREEWAY SUITE 400
HOUSTON, TX 77079
TEXAS PE FIRM REG. F-20017

SURVEYED BY: AMANI ENGR.
FB NO. P-6335

STATE OF TEXAS
KARAM QADDO
125611
LICENSED PROFESSIONAL ENGINEER
11/13/25

CITY OF HOUSTON
HOUSTON PUBLIC WORKS

LIFT STATION REHABILITATION & RECONSTRUCTION CONSENT DECREE

TRAFFIC CONTROL STANDARD DETAILS

SHEET 7 OF 9

WBS NUMBER	FOR CITY OF HOUSTON USE ONLY
R-000267-0175-4	
DRAWING SCALE	
AS NOTED	
CITY OF HOUSTON PM	
NP NAWARAJ PANTA, P.E.	
SHEET NO. 306 OF 312	

NO.	DATE	REVISION	APP.

DISCLAIMER:
THE USE OF THIS STANDARD IS GOVERNED BY THE TEXAS ENGINEERING PRACTICE ACT. THE DESIGN REQUIREMENTS ON THIS STANDARD DO NOT PURPORT TO ADDRESS ALL OF THE SAFETY CONCERNS ASSOCIATED WITH THEIR USE. THE ENGINEER OF RECORD (EOR) IS TO REVIEW THESE DESIGN REQUIREMENTS AND BY AUTHORIZING THEIR USE, ACCEPTS RESPONSIBILITY FOR THEIR APPLICABILITY, ADEQUACY AND SAFETY. NO WARRANTY OF ANY KIND IS MADE BY THE CITY OF HOUSTON FOR ANY PURPOSES WHATSOEVER. THE CITY OF HOUSTON ASSUMES NO RESPONSIBILITY FOR INCORRECT RESULTS OR DAMAGES RESULTING FROM ITS USE.

FILE PATH: P:\Arcadis\1392-CMAR\4-0-Production-Working\4-1-CAD\TCP\1392-TCP SD.dwg
PLOT STYLE: COH.ctb PLOTTED: 11/13/2025 12:06 PM

DocuSign Envelope ID: CB71C116-B716-4899-A5EE-0D2F2CC55AF6

A	T	U	D
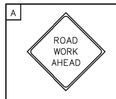			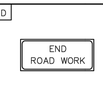
ROAD WORK AHEAD	ONE LANE ROAD AHEAD		END ROAD WORK
CW20-1	CW20-4	CW20-7	G20-2
M	N		
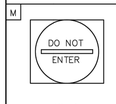	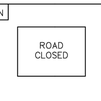		
DO NOT ENTER	ROAD CLOSED		
R5-1	R11-2		

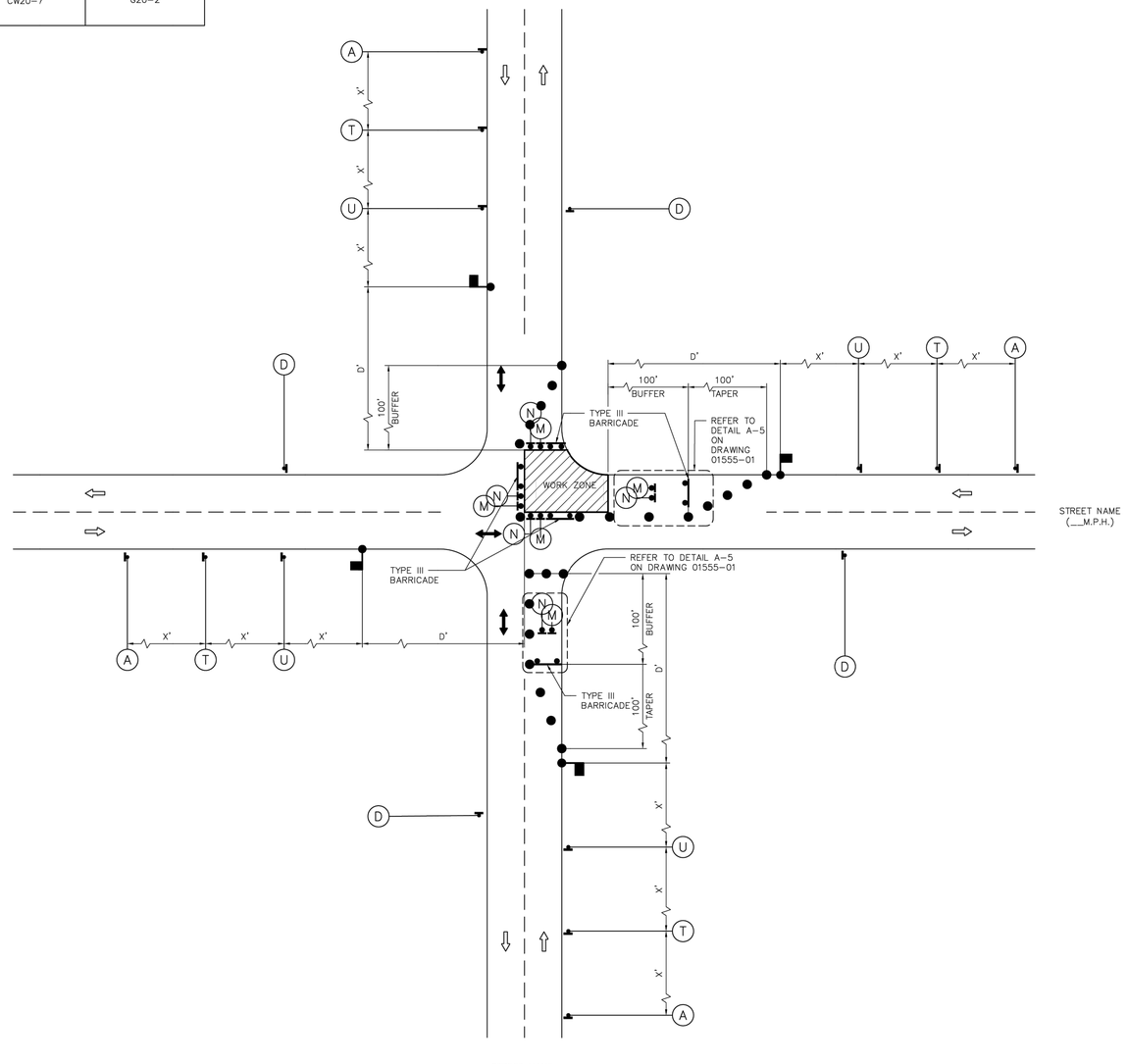

LEGEND:

- SIGN
- FLAGGER
- APPROVED CHANNELIZATION DEVICE
- BARRICADE
- FLASHING ARROW PANEL
- AREA UNDER CONSTRUCTION
- EXISTING TRAVEL WAY
- TRAFFIC CONTROL PLAN DETOUR TRAVEL WAY

NOTES:

1. MINOR WORK AND DAYTIME OPERATIONS ONLY.
2. REFER TO PROJECT SPECIFIC TRAFFIC CONTROL PLANS FOR MAJOR OPERATIONS AND OVERNIGHT LANE CLOSURES.
3. FOR DIMENSIONS REFER TO SHEET 01555-01.
4. INSTALL FLASHERS ON DRUMS WHERE REQUIRED AND APPROVED BY CITY TRAFFIC ENGINEER.
5. MAX. 100' WORK ZONE AT A TIME.

APPROVED BY:	APPROVED BY:
DocuSigned by: Suhail Tanwar — SEFB80C641F5478...	DocuSigned by: KHANG NGUYEN — 95A2BEFDA7584CD...
CITY ENGINEER	CITY TRAFFIC ENGINEER
APPROVED BY: DocuSigned by: Carl Haddock — A0DC61DE7B6E4E6...	
DIRECTOR OF HOUSTON PUBLIC WORKS	
EFF DATE: NOV-27-2023	DWG NO: 01555-12

CITY OF HOUSTON
HOUSTON PUBLIC WORKS STANDARD

TCP TYPICAL CONSTRUCTION ZONE AT A 4-WAY INTERSECTION (LOW VOLUME TRAFFIC) PHASE 4 OF 4

DRAWING SCALE	FOR CITY OF HOUSTON USE ONLY
NOT TO SCALE	

Gauge ENGINEERING
11750 KATY FREEWAY SUITE 400
HOUSTON, TX 77079
TEXAS PE FIRM REG. F-20017

SURVEYED BY: AMANI ENGR.
FB NO. P-6335

STATE OF TEXAS — KARAM QADDO — 125611 — LICENSED PROFESSIONAL ENGINEER
11/13/25

CITY OF HOUSTON
HOUSTON PUBLIC WORKS

LIFT STATION REHABILITATION & RECONSTRUCTION CONSENT DECREE

TRAFFIC CONTROL STANDARD DETAILS

SHEET 8 OF 9

WBS NUMBER	FOR CITY OF HOUSTON USE ONLY
R-000267-0175-4	
DRAWING SCALE	
AS NOTED	
CITY OF HOUSTON PM	
NP NAWARAJ PANTA, P.E.	
SHEET NO. 307 OF 312	

NO.	DATE	REVISION	APP.

DISCLAIMER:
THE USE OF THIS STANDARD IS GOVERNED BY THE TEXAS ENGINEERING PRACTICE ACT. THE DESIGN REQUIREMENTS ON THIS STANDARD DO NOT PURPORT TO ADDRESS ALL OF THE SAFETY CONCERNS ASSOCIATED WITH THEIR USE. THE ENGINEER OF RECORD (EOR) IS TO REVIEW THESE DESIGN REQUIREMENTS AND BY AUTHORIZING THEIR USE, ACCEPTS RESPONSIBILITY FOR THEIR APPLICABILITY, ADEQUACY AND SAFETY. NO WARRANTY OF ANY KIND IS MADE BY THE CITY OF HOUSTON FOR ANY PURPOSES WHATSOEVER. THE CITY OF HOUSTON ASSUMES NO RESPONSIBILITY FOR INCORRECT RESULTS OR DAMAGES RESULTING FROM ITS USE.

FILE PATH: P:\Arcgis\1392-CMAR\4-0-Production-Working\4-1-CAD\TCP\1392-TCP SD.dwg
PLOT STYLE: COH.ctb PLOTTED: 11/13/2025 12:06 PM

DocuSign Envelope ID: CB71C116-B716-4899-A5EE-0D2F2CC55AF6

DISCLAIMER:
THE USE OF THIS STANDARD IS GOVERNED BY THE TEXAS ENGINEERING PRACTICE ACT. THE DESIGN REQUIREMENTS ON THIS STANDARD DO NOT PURPORT TO ADDRESS ALL OF THE SAFETY CONCERNS ASSOCIATED WITH THEIR USE. THE ENGINEER OF RECORD (EOR) IS TO REVIEW THESE DESIGN REQUIREMENTS AND BY AUTHORIZING THEIR USE, ACCEPTS RESPONSIBILITY FOR THEIR APPLICABILITY, ADEQUACY AND SAFETY. NO WARRANTY OF ANY KIND IS MADE BY THE CITY OF HOUSTON FOR ANY PURPOSES WHATSOEVER. THE CITY OF HOUSTON ASSUMES NO RESPONSIBILITY FOR INCORRECT RESULTS OR DAMAGES RESULTING FROM ITS USE.

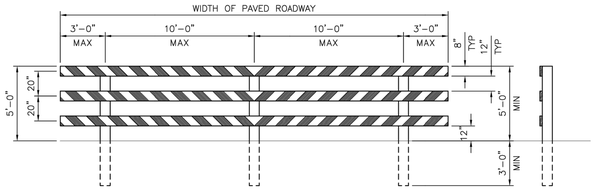

TYPE III BARRICADE FOR END OF ROAD

FOR TYPE III BARRICADE FOR END OF ROAD, THE THREE (3) RAILS SHALL BE REFLECTIVE RED AND REFLECTIVE WHITE STRIPES ON SIDE FACING TRAFFIC

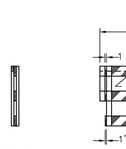

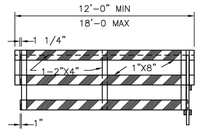

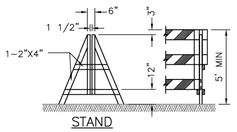

DEMOUNTABLE TYPE III BARRICADE

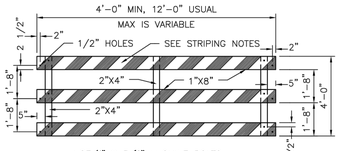

PANEL FOR TYPE III BARRICADE

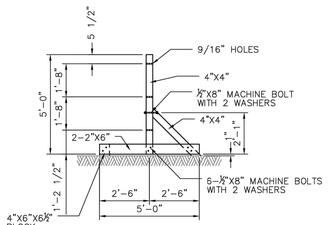

STAND FOR TYPE III BARRICADE

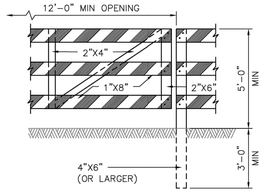

GATE FOR TYPE III BARRICADE

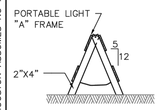

"A" FRAME

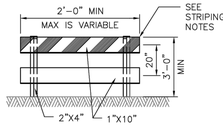

TYPE I

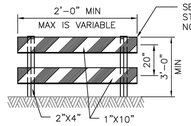

TYPE II

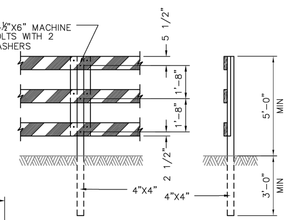

POST FOR TYPE III BARRICADE

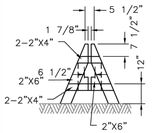

DEMOUNTABLE

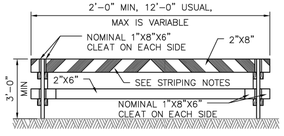

TYPE I

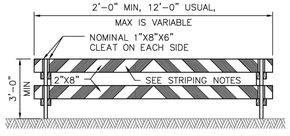

TYPE II

BARRICADE NOTES:

1. THE MOST RECENT EDITION OF THE TEXAS MANUAL ON UNIFORM TRAFFIC CONTROL DEVICES, AND IT'S REVISIONS, SHALL GOVERN THE CONSTRUCTION AND USE OF ALL ITEMS HEREIN DESCRIBED.
2. CHANNELIZATION DEVICES OTHER THAN BARRICADES SHOULD NORMALLY BE USED FOR CHANNELIZATION PURPOSES.
3. BARRICADES SHOULD NORMALLY BE PLACED PERPENDICULAR TO THE TRAFFIC FLOW. OTHER CHANNELIZING DEVICES, SUCH AS DRUMS, VERTICAL PANELS OR PORTABLE BARRIERS, SHOULD BE USED WHERE NEEDED TO SEPARATE TRAFFIC FROM THE WORK AREA. IN ALL CASES, THE BARRICADES SHOULD BE SO LOCATED AS TO MOST ADVANTAGEOUSLY WARN AND DIRECT TRAFFIC.
4. BARRICADES MAY BE DESIGNED AND CONSTRUCTED FROM WOOD OR ANY OTHER SUITABLE MATERIAL APPROVED BY THE TMUTCD. THE CONSTRUCTION DETAILS SHOWN HEREON ARE TYPICAL AND ARE SUGGESTED DETAILS FOR WOOD SUPPORT SYSTEMS FOR BARRICADES. THE DETAILS OF RAIL WIDTH AND STRIPING, NUMBER AND SPACING OF RAILS, MINIMUM LENGTH AND HEIGHT (ABOVE PAVEMENT) OF RAILS MUST BE ADHERED TO WHEN ALTERNATE DESIGNS ARE USED.
5. BARRICADES ARE TO BE CONSTRUCTED OF CLEAN SOUND MATERIAL. ALL SURFACES ABOVE GROUND, WHICH ARE NOT STRIPED, SHALL BE WHITE EXCEPT THE UNPAINTED GALVANIZED METAL OR ALUMINUM COMPONENTS MAY BE USED. COMPONENTS MADE OF LUMBER SHALL BE PAINTED WITH A MINIMUM OF TWO COATS OF AN APPROVED BRAND OF WHITE PAINT TO SECURE THOROUGH COVERAGE AND A UNIFORM WHITE COLOR.
6. THE REFLECTORIZED WHITE AND REFLECTORIZED ORANGE (REFLECTORIZED RED) STRIPES FOR BARRICADES, DRUMS AND VERTICAL PANELS SHALL BE CONSTRUCTED OF HIGH INTESITY SHEETING AND SHALL BE MAINTAINED TO MEET THE APPEARANCE, COLOR AND REFLECTIVITY REQUIREMENTS SET BY DOTT.
7. THE CONTRACTOR SHALL MAINTAIN EACH BARRICADE IN A CLEAN AND GOOD CONDITION.
8. BARRICADES SHALL BE REMOVED UPON COMPLETION OF THE WORK AND/OR THE ELIMINATION OF THE HAZARD ON ANY SECTION.

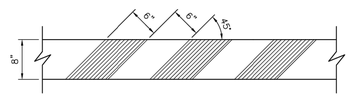

STRIPING FOR BARRICADE

1. FOR ALL TYPES OF BARRICADES WITH RAILS LESS THAN 3'-0" LONG, STRIPES 4" WIDE SHALL BE USED. IDENTIFICATION MARKINGS MAY BE SHOWN ONLY ON BACK SIDE OF BARRICADE RAILS.
2. STRIPING SHOULD COVER THE FULL WIDTH OF THE RAIL. STRIPING OF RAILS, PANELS, ETC, SHOULD SLOPE DOWNWARD AT AN ANGLE OF 45° DEGREES IN DIRECTIONS TRAFFIC IS TO PASS.
3. WHERE A BARRICADE EXTENDS ENTIRELY ACROSS A ROADWAY, IT IS DESIRABLE THAT THE STRIPES SLOPE DOWNWARD IN THE DIRECTION TOWARD WHICH TRAFFIC MUST TURN IN DETOURING. WHEN BOTH RIGHT AND LEFT TURNS ARE PROVIDED FOR, THE CHEVRON STRIPING MAY SLOPE DOWNWARD IN BOTH DIRECTIONS FROM THE CENTER OF THE BARRICADE.

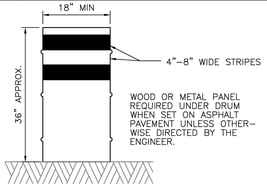

DRUMS

1. DRUMS, SET ON END, AND USED FOR TRAFFIC WARNING OR CHANNELIZATION SHALL BE APPROX 36" IN HEIGHT AND A MIN OF 18" IN DIAMETER. THE CONTRACTOR, AT HIS OPTION, MAY USE DRUMS MADE FROM STEEL BARRELS OR BLACK POLYETHYLENE PLASTIC DRUM LINERS WEIGHING APPROX EIGHT POUNDS EACH. THE MARKINGS ON DRUMS SHALL BE HORIZONTAL, CIRCUMFERENTIAL, REFLECTORIZED ORANGE AND REFLECTORIZED WHITE STRIPES, 4 TO 8 INCHES WIDE. THE FIRST REFLECTORIZED STRIPE SHOULD START WITHIN TWO (2) INCHES OF THE TOP OF THE DRUM. THERE SHALL BE AT LEAST TWO ORANGE AND TWO WHITE STRIPES ON EACH DRUM. IF THERE ARE NON-REFLECTORIZED SPACES BETWEEN THE HORIZONTAL ORANGE AND WHITE STRIPES, THEY SHALL BE NO MORE THAN 2 INCHES WIDE. METAL DRUMS SHALL BE PAINTED BLACK OR ORANGE BEFORE REFLECTORIZED STRIPES ARE ADDED. ALL DRUMS ON PROJECT WILL BE THE SAME COLOR. WHEN DRUMS ARE PLACED IN THE ROADWAY, APPROPRIATE WARNING SIGNS SHOULD BE USED. DURING HOURS OF DARKNESS, A FLASHING WARNING LIGHT SHOULD BE PLACED ON DRUMS USED SINGLY AS A WARNING DEVICE. STEADY BURN ELECTRIC LIGHTS OR DELINEATORS SHOULD BE PLACED ON DRUMS USED IN SERIES FOR TRAFFIC CHANNELIZATION. DRUMS SHALL BE WEIGHTED WITH SAND TO THE EXTENT INDICATED IN THE PLANS.
2. CWI-8 CHEVRON SIGNS, CWI-6A ARROW SIGNS OR VP-I VERTICAL PANELS MOUNTED ABOVE DRUMS MAY BE USED AS SUPPLEMENTS TO DRUM DELINEATION.

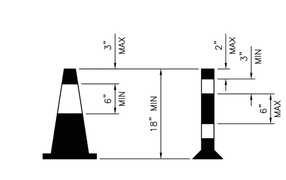

CONES

1. TRAFFIC CONES AND TUBULAR MARKERS SHALL BE A MIN OF 18" INCHES IN HEIGHT WITH A BROADENED BASE AND MAY BE MADE OF VARIOUS MATERIALS TO WITHSTAND IMPACT WITHOUT DAMAGE TO THEMSELVES OR TO VEHICLES. LARGER SIZES SHOULD BE USED ON FREEWAYS AND OTHER ROADWAYS WHERE SPEED ARE RELATIVELY HIGH OR WHERE EVER MORE CONSPICUOUS GUIDANCE IS NEEDED. ORANGE SHALL BE THE PREDOMINANT COLOR ON CONES AND TUBULAR MARKERS. THEY SHOULD BE KEPT CLEAN AND BRIGHT FOR MAX TARGET VALUE. FOR NIGHT TIME USE THEY SHALL BE REFLECTORIZED OR EQUIPPED WITH LIGHTING DEVICES FOR MAX VISIBILITY. REFLECTORIZED MATERIAL SHALL HAVE A SMOOTH, SEALED OUTER SURFACE WHICH WILL DISPLAY THE SAME APPROX COLOR DAY AND NIGHT.
2. REFLECTORIZATION OF TUBULAR MARKERS SHALL BE A MIN OF TWO THREE-INCH BANDS PLACED A MAX OF 2" FROM THE TOP WITH A MAX OF 6" BETWEEN THE BANDS. REFLECTORIZATION OF CONES SHALL BE PROVIDED BY A MIN 6" BAND PLACED A MAX OF 3" FROM THE TOP.
3. CONES OR TUBULAR MARKERS ARE GENERALLY ONLY SUITABLE FOR TEMPORARY USAGE (UP TO 8 HOURS) WITH OTHER CHANNELIZATION DEVICES SUCH AS VERTICAL PANELS OR BARRICADES PREFERRED FOR LONGER TERM USAGE. CARE SHOULD BE TAKEN TO INSURE THAT THEY REMAIN IN THEIR PROPER LOCATION AND IN AN UPRIGHT POSITION.

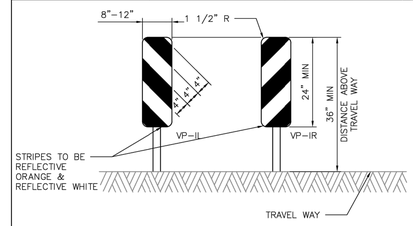

VERTICAL PANELS (VP)

VERTICAL PANELS ARE NORMALLY USED AS CHANNELIZING DEVICES TO INDICATE TANGENT OR NEARLY TANGENT ROADWAY ALIGNMENT WHERE GOOD TARGET VALUE OF A DEVICE IS NEEDED IN DAYTIME AS WELL AS THE NIGHTTIME. IN ADDITION, VERTICAL PANELS SHOULD BE USED AT THE EDGE OF SHOULDER DROP-OFFS AND OTHER SUCH AREAS AS LANE TRANSITIONS WHERE POSITIVE DAY AND NIGHT DELINEATION MAY BE REQUIRED. VERTICAL PANELS SHOULD BE MOUNTED BACK TO BACK IF USED AT THE EDGE OF CUTS ADJACENT TO TWO-WAY TWO LANE ROADWAYS. STRIPES SHOULD ALWAYS SLOPE DOWNWARD TOWARD THE TRAVELED WAY.

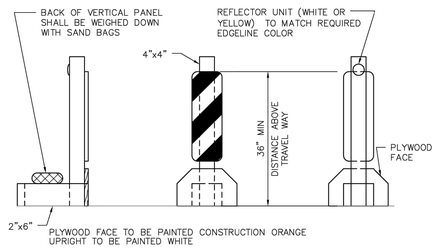

TYPICAL PORTABLE VERTICAL PANEL OR DELINEATOR

OTHER SIMILAR SUPPORTS MAY BE USED WHEN APPROVED BY TMUTCD AND DIRECTED BY THE CITY OF HOUSTON.

APPROVED BY:	APPROVED BY:
DocuSigned by: Sukut Kanawar 3D7B50C041F547A...	DocuSigned by: KHANG NGUYEN 95A2B0FDA78B4CD...
CITY ENGINEER	CITY TRAFFIC ENGINEER
APPROVED BY: DocuSigned by: Carl Haddock A60C4116B72B3453...	
DIRECTOR OF HOUSTON PUBLIC WORKS	
EFF DATE: NOV-27-2023	DWG NO: 01555-14

CITY OF HOUSTON
HOUSTON PUBLIC WORKS STANDARD

BARRICADE AND CHANNELIZING DEVICES

	FOR CITY OF HOUSTON USE ONLY
DRAWING SCALE	
NOT TO SCALE	

NO.	DATE	REVISION	APP.

Gauge ENGINEERING
11750 KATY FREEWAY SUITE 400
HOUSTON, TX 77079
TEXAS PE FIRM REG. F-20017

SURVEYED BY: AMANI ENGR.
FB NO. P-6335

STATE OF TEXAS
KARAM QADDO
125611
LICENSED PROFESSIONAL ENGINEER
11/13/25

CITY OF HOUSTON
HOUSTON PUBLIC WORKS

LIFT STATION REHABILITATION & RECONSTRUCTION CONSENT DECREE

TRAFFIC CONTROL STANDARD DETAILS

SHEET 9 OF 9

WBS NUMBER	FOR CITY OF HOUSTON USE ONLY
R-000267-0175-4	
DRAWING SCALE	
AS NOTED	
CITY OF HOUSTON PM	
NP NAWARAJ PANTA, P.E.	
SHEET NO. 308 OF 312	

FILE PATH: P:\Arcadis\1392-CMAR\4-0-Production-Working\4-1-CAD\TCP\1392-TCP SD.dwg
PLOT STYLE: COH.ctb PLOTTED: 11/13/2025 12:06 PM

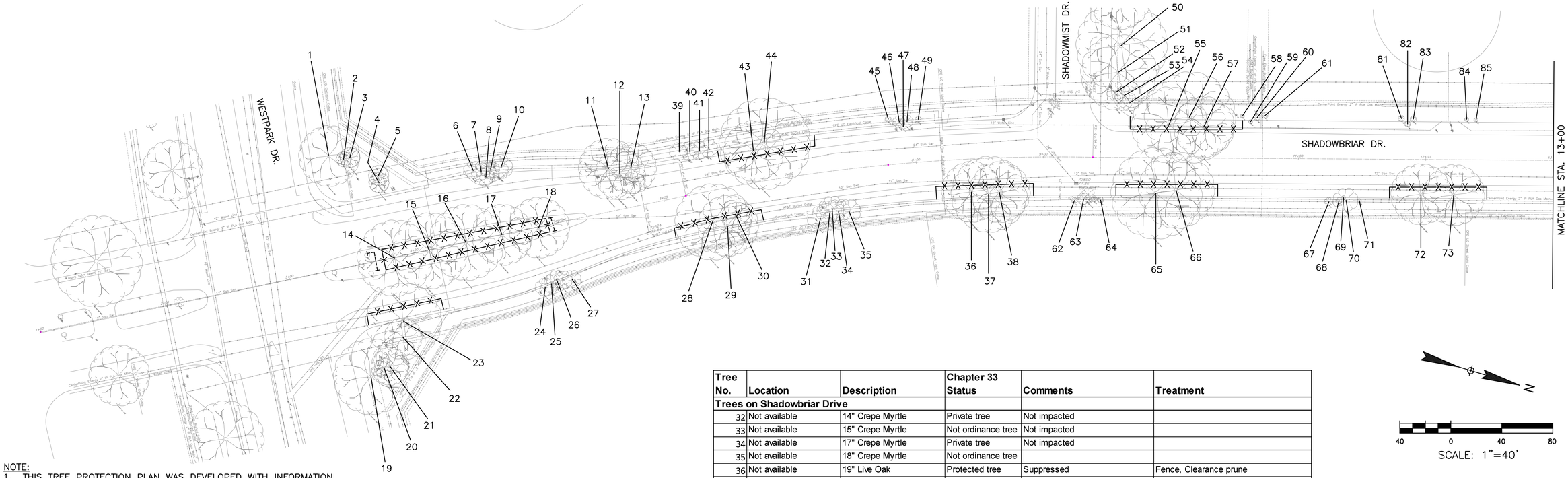

NOTE:

1. THIS TREE PROTECTION PLAN WAS DEVELOPED WITH INFORMATION PROVIDED BY DESIGN ENGINEER IN DRAWINGS DATED NOVEMBER 2025. THE PLAN CONSIDERS ALL FITTINGS, VERTICAL OFFSETS AND AREAS OF NECESSARY EXCAVATION. CHANGES MADE TO DESIGN MAY COMPROMISE THE TREE PROTECTION PLAN. REFER SPECIFICATIONS 01562 AND 02915.
2. CN KOEHL URBAN FORESTRY, INC. HAS NOT BEEN CONTRACTED TO COMPLETE ANY TREE RISK ASSESSMENTS ON THIS PROJECT–THIS TPP INCLUDES PROTECTION MEASURES FOR SPECIES OF TREES PROTECTED BY APPLICABLE ORDINANCE ONLY. CN KOEHL URBAN FORESTRY, INC. DOES NOT GUARANTEE CONDITION OR STRUCTURAL INTEGRITY OF ANY TREE LOCATED ON OR ADJACENT TO THIS PROJECT.
3. IN AREAS WHERE INDIVIDUAL TREES HAVE NOT BEEN TIED IN BY SURVEY, APPROXIMATE LOCATION IS INDICATED ON TPP WITH A DOT AND TREE NUMBER. ACCURACY OF REPRESENTED LOCATION IS NOT GUARANTEED BY CN KOEHL URBAN FORESTRY, INC.
4. THE CONTRACTOR'S ARBORIST WILL MARK LOCATIONS OF TREES TO BE PLANTED AND OBTAIN APPROVAL BY CITY ENGINEER AND CITY FORESTER BEFORE PURCHASING OR EXCAVATING PLANTING HOLE OF EACH TREE.

TREE PRESERVATION PLAN LEGEND

- 1 — TREE NUMBER/LOCATION
- (1) — TREE TO BE REMOVED
- –X–X– — TREE PROTECTION FENCE
- ----- — ROOT PRUNING TRENCH

Tree No.	Location	Description	Chapter 33 Status	Comments	Treatment
Trees on Shadowbriar Drive					
1	Not available	23" Live Oak	Corridor tree	Not impacted	
2	Not available	9" Holly	Private tree	Dead, Not impacted	
3	Not available	11" Holly	Private tree	Dead, Not impacted	
4	Not available	12" Holly	Private tree	Dead, Not impacted	
5	Not available	12" Holly	Private tree	Dead, Not impacted	
6	Not available	17" Crepe Myrtle	Private tree	Not impacted	
7	Not available	13" Crepe Myrtle	Private tree	Not impacted	
8	Not available	14" Crepe Myrtle	Private tree	Not impacted	
9	Not available	16" Crepe Myrtle	Private tree	Not impacted	
10	Not available	21" Crepe Myrtle	Private tree	Not impacted	
11	Not available	21" Live Oak	Protected tree		Clearance prune
12	Not available	19" Live Oak	Protected tree		Clearance prune
13	Not available	22" Live Oak	Protected tree		Clearance prune
14	Median	24" Live Oak	Protected tree		Root prune for plug & manhole, Fence, Clearance prune
15	Median	22" Live Oak	Protected tree	Trunk scars	Fence, Clearance prune
16	Median	21" Live Oak	Protected tree		Fence, Clearance prune
17	Median	19" Live Oak	Protected tree		Fence, Clearance prune
18	Median	20" Live Oak	Protected tree		Root prune for plug & manhole, Fence, Clearance prune
19	Not available	25" Live Oak	Corridor tree	Not impacted	
20	Not available	9" Holly	Private tree	Not impacted	
21	Not available	9" Holly	Private tree	Not impacted	
22	Not available	13" Holly	Private tree	Not impacted	
23	Not available	24" Live Oak	Protected tree		Fence, Clearance prune
24	Not available	17" Crepe Myrtle	Private tree	Not impacted	
25	Not available	14" Crepe Myrtle	Private tree	Not impacted	
26	Not available	13" Crepe Myrtle	Private tree	Not impacted	
27	Not available	13" Crepe Myrtle	Private tree	Not impacted	
28	Not available	23" Live Oak	Protected tree		Fence, Clearance prune
29	Not available	22" Live Oak	Protected tree		Fence, Clearance prune
30	Not available	10" Live Oak	Protected tree	Suppressed	Fence, Clearance prune
31	Not available	21" Crepe Myrtle	Private tree	Not impacted	

Tree No.	Location	Description	Chapter 33 Status	Comments	Treatment
Trees on Shadowbriar Drive					
32	Not available	14" Crepe Myrtle	Private tree	Not impacted	
33	Not available	15" Crepe Myrtle	Not ordinance tree	Not impacted	
34	Not available	17" Crepe Myrtle	Private tree	Not impacted	
35	Not available	18" Crepe Myrtle	Not ordinance tree		
36	Not available	19" Live Oak	Protected tree	Suppressed	Fence, Clearance prune
37	Not available	23" Live Oak	Protected tree		Fence, Clearance prune
38	Not available	20" Live Oak	Protected tree		Fence, Clearance prune
39	Not available	17" Crepe Myrtle	Not ordinance tree		
40	Not available	14" Crepe Myrtle	Not ordinance tree		
41	Not available	13" Crepe Myrtle	Not ordinance tree		
42	Not available	15" Crepe Myrtle	Not ordinance tree		
43	Not available	15" Live Oak	Protected tree		Fence, Clearance prune
44	Not available	24" Live Oak	Protected tree		Fence, Clearance prune
45	Not available	5" Crepe Myrtle	Private tree	Not impacted	
46	Not available	9" Crepe Myrtle	Private tree	Not impacted	
47	Not available	3" Crepe Myrtle	Not ordinance tree		
48	Not available	10" Crepe Myrtle	Private tree	Not impacted	
49	Not available	6" Crepe Myrtle	Private tree	Not impacted	
50	12402 Shadowmist	26" Live Oak	Corridor tree	Not impacted	
51	12402 Shadowmist	21" Live Oak	Corridor tree	Not impacted	
52	12402 Shadowmist	17" Crepe Myrtle	Private tree	Not impacted	
53	12402 Shadowmist	14" Crepe Myrtle	Private tree	Not impacted	
54	12402 Shadowmist	13" Crepe Myrtle	Private tree	Not impacted	
55	12402 Shadowmist	21" Live Oak	Protected tree		Fence
56	12402 Shadowmist	25" Live Oak	Protected tree		Fence
57	12402 Shadowmist	18" Live Oak	Protected tree		Fence, Clearance prune
58	12402 Shadowmist	3" Crepe Myrtle	Private tree	Not impacted	
59	12402 Shadowmist	4" Crepe Myrtle	Private tree	Not impacted	
60	12402 Shadowmist	5" Crepe Myrtle	Private tree	Not impacted	
61	12402 Shadowmist	7" Crepe Myrtle	Private tree	Not impacted	
62	Not available	5" Crepe Myrtle	Private tree	Not impacted	
63	Not available	7" Crepe Myrtle	Private tree	Not impacted	
64	Not available	4" Crepe Myrtle	Private tree	Not impacted	
65	Not available	23" Live Oak	Protected tree	Beryl damage, 20% canopy loss	Fence, Clearance prune
66	Not available	21" Live Oak	Protected tree		Fence, Clearance prune
67	Not available	7" Crepe Myrtle	Not ordinance tree		
68	Not available	7" Crepe Myrtle	Not ordinance tree		
69	Not available	7" Crepe Myrtle	Not ordinance tree		
70	Not available	7" Crepe Myrtle	Not ordinance tree		
71	Not available	4" Crepe Myrtle	Not ordinance tree		
72	Not available	18" Live Oak	Ordinance tree		Fence, Clearance prune
73	Not available	20" Live Oak	Ordinance tree		Fence, Clearance prune
81	Not available	5" Crepe Myrtle	Private tree	Not impacted	
82	Not available	5" Crepe Myrtle	Private tree	Not impacted	
83	Not available	4" Crepe Myrtle	Private tree	Not impacted	
84	Not available	4" Crepe Myrtle	Private tree	Not impacted	
85	Not available	4" Crepe Myrtle	Private tree	Not impacted	

NO.	DATE	REVISION	APP.

C.N. Koehl
Urban Forestry, Inc.
210 Stone Bush Ct. • Katy, Texas 77493
281-391-0022 ckoehl@koehlurbanforestry.com

APPROVED: Craig N. Koehl 11-13-2025

ARCADIS
Infrastructure · Water · Environment · Buildings
1330 Post Oak Blvd, Suite 2250
Houston, TX 77056
Tel: 713-953-4800
Fax: 713-977-4620
www.arcadis.com
Texas Registered Engineering Firm F-533

SURVEYED BY: AMANI ENGR.
FB NO. P-6335

CITY OF HOUSTON
HOUSTON PUBLIC WORKS

LIFT STATION REHABILITATION & RECONSTRUCTION CONSENT DECREE

TREE PROTECTION PLAN – 1

SHEET 1 OF 4

WBS NUMBER	FOR CITY OF HOUSTON USE ONLY
R-000267-0175-4	
DRAWING SCALE	
AS NOTED	
CITY OF HOUSTON PM	
NP NAWARAJ PANTA, P.E.	
SHEET NO. 309 OF 312	

FILE PATH: C:\Users\Ned\Desktop\Work For Craig\ARCADIS CMAR\ARCADIS CMAR TP-1.dwg
PLOT STYLE: COH.ctb PLOTTED: 12/3/2025 11:30 AM

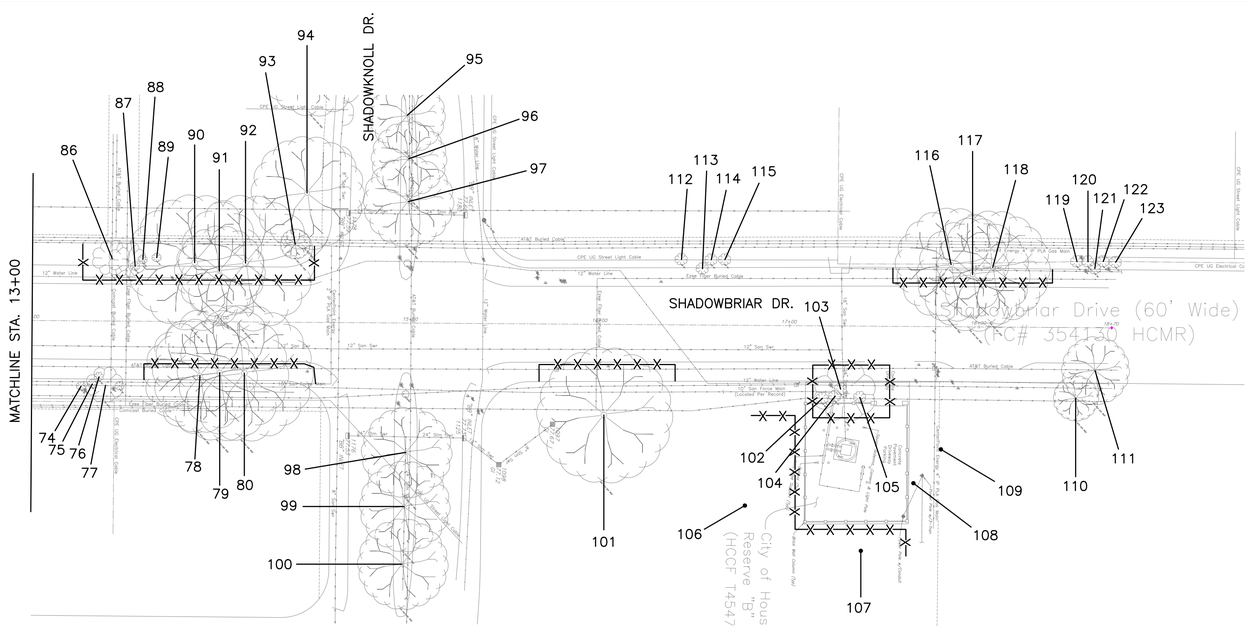

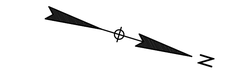

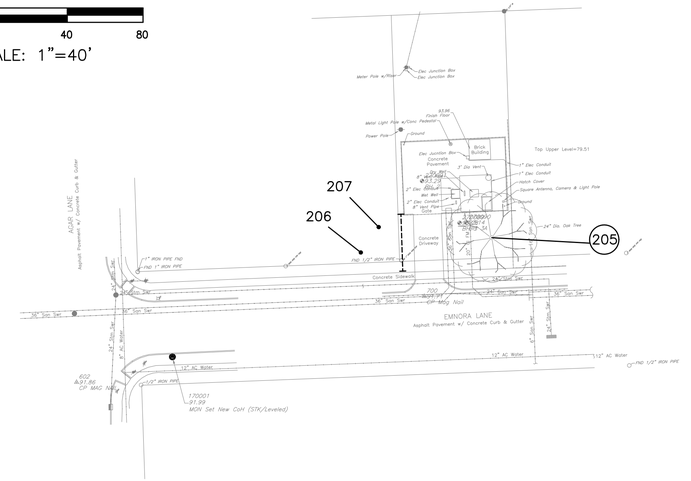

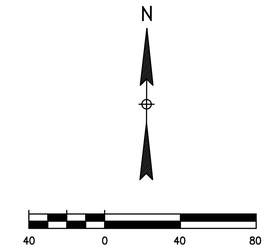

Tree No.	Location	Description	Chapter 33 Status	Comments	Treatment
Trees on Shadowbriar Drive					
74	Not available	4" Crepe Myrtle	Not ordinance tree		
75	Not available	4" Crepe Myrtle	Not ordinance tree		
76	Not available	4" Crepe Myrtle	Not ordinance tree		
77	Not available	22" Crepe Myrtle	Private tree	Not impacted	
78	Not available	21" Live Oak	Protected tree		Fence, Clearance prune
79	Not available	33" Live Oak	Protected tree		Fence, Clearance prune
80	Not available	24" Live Oak	Protected tree		Fence, Clearance prune
81	Not available	5" Crepe Myrtle	Private tree	Not impacted	
82	Not available	5" Crepe Myrtle	Private tree	Not impacted	
83	Not available	4" Crepe Myrtle	Private tree	Not impacted	
84	Not available	4" Crepe Myrtle	Private tree	Not impacted	
85	Not available	4" Crepe Myrtle	Private tree	Not impacted	
86	Not available	21" Crepe Myrtle	Protected tree		Fence
87	2403 Shadowknoll	3" Crepe Myrtle	Not ordinance tree		
88	2403 Shadowknoll	5" Crepe Myrtle	Not ordinance tree		
89	2403 Shadowknoll	3" Crepe Myrtle	Not ordinance tree		
90	2403 Shadowknoll	22" Live Oak	Protected tree		Fence, Clearance prune
91	2403 Shadowknoll	16" Live Oak	Protected tree		Fence, Clearance prune
92	2403 Shadowknoll	28" Live Oak	Protected tree		Fence, Clearance prune
93	2403 Shadowknoll	10" Live Oak	Protected tree		Fence
94	2403 Shadowknoll	24" Live Oak	Corridor tree	Not impacted	
95	Median	18" Live Oak	Protected tree	Not impacted	
96	Median	17" Live Oak	Protected tree	Not impacted	
97	Median	19" Live Oak	Protected tree	Not impacted	
98	Median	28" Live Oak	Protected tree	Not impacted	
99	Median	19" Live Oak	Protected tree	Not impacted	
100	Median	20" Live Oak	Protected tree	Not impacted	
101	City Park	32" Live Oak	Protected tree		Fence
102	3225 Shadowbriar	6" Crepe Myrtle	Not ordinance tree		
103	3225 Shadowbriar	4" Crepe Myrtle	Not ordinance tree		
104	3225 Shadowbriar	22" Crepe Myrtle	Protected tree		Fence
105	3225 Shadowbriar	5" Crepe Myrtle	Not ordinance tree		
106	City Park	32" Live Oak	Protected tree		Fence
107	City Park	24" Live Oak	Protected tree		Fence, Clearance prune
108	Alief ISD	7" Yaupon	Private tree	Dead, Not impacted	
109	Alief ISD	6" Monterrey Oak	Private tree	Not impacted	
110	Alief ISD	10" Live Oak	Private tree	Not impacted	
111	Alief ISD	13" Monterrey Oak	Protected tree	Not impacted	
112	Not available	8" Crepe Myrtle	Not ordinance tree		
113	Not available	8" Crepe Myrtle	Not ordinance tree		
114	Not available	6" Crepe Myrtle	Not ordinance tree		
115	Not available	8" Crepe Myrtle	Not ordinance tree		
116	Not available	22" Live Oak	Protected tree		Fence, Clearance prune
117	Not available	21" Live Oak	Protected tree		Fence, Clearance prune
118	Not available	26" Live Oak	Corridor tree	90% dieback, Poor	Fence
119	Not available	4" Crepe Myrtle	Not ordinance tree		
120	Not available	9" Crepe Myrtle	Not ordinance tree		
121	Not available	10" Crepe Myrtle	Not ordinance tree		
122	Not available	9" Crepe Myrtle	Not ordinance tree		
123	Not available	10" Crepe Myrtle	Not ordinance tree		

Tree No.	Location	Description	Chapter 33 Status	Comments	Treatment
Trees at Emnora #2 Lift Station					
205	10662 Emnora	18" Water Oak	Protected tree	Remove for force main and water service	Remove tree, 18" replacement required
206	10666 Emnora	20" Pine	Protected tree	Corridor tree	Root prune for storm
207	10666 Emnora	22" Pine	Protected tree	Corridor tree	Root prune for storm

NOTE:
1. THIS TREE PROTECTION PLAN WAS DEVELOPED WITH INFORMATION PROVIDED BY DESIGN ENGINEER IN DRAWINGS DATED NOVEMBER 2025. THE PLAN CONSIDERS ALL FITTINGS, VERTICAL OFFSETS AND AREAS OF NECESSARY EXCAVATION. CHANGES MADE TO DESIGN MAY COMPROMISE THE TREE PROTECTION PLAN. REFER SPECIFICATIONS 01562 AND 02915.
2. CN KOEHL URBAN FORESTRY, INC. HAS NOT BEEN CONTRACTED TO COMPLETE ANY TREE RISK ASSESSMENTS ON THIS PROJECT–THIS TPP INCLUDES PROTECTION MEASURES FOR SPECIES OF TREES PROTECTED BY APPLICABLE ORDINANCE ONLY. CN KOEHL URBAN FORESTRY, INC. DOES NOT GUARANTEE CONDITION OR STRUCTURAL INTEGRITY OF ANY TREE LOCATED ON OR ADJACENT TO THIS PROJECT.
3. IN AREAS WHERE INDIVIDUAL TREES HAVE NOT BEEN TIED IN BY SURVEY, APPROXIMATE LOCATION IS INDICATED ON TPP WITH A DOT AND TREE NUMBER. ACCURACY OF REPRESENTED LOCATION IS NOT GUARANTEED BY CN KOEHL URBAN FORESTRY, INC.
4. THE CONTRACTOR'S ARBORIST WILL MARK LOCATIONS OF TREES TO BE PLANTED AND OBTAIN APPROVAL BY CITY ENGINEER AND CITY FORESTER BEFORE PURCHASING OR EXCAVATING PLANTING HOLE OF EACH TREE.

TREE PRESERVATION PLAN LEGEND

1	TREE NUMBER/LOCATION
①	TREE TO BE REMOVED
–X–X–	TREE PROTECTION FENCE
⊢-----⊣	ROOT PRUNING TRENCH

NO.	DATE	REVISION	APP.

C.N. Koehl
Urban Forestry, Inc.
210 Stone Bush Ct. ◦ Katy, Texas 77493
281-391-0022 ckoehl@koehlurbanforestry.com

APPROVED: Craig N. Koehl 11-13-2025

ARCADIS
Infrastructure · Water · Environment · Buildings
1330 Post Oak Blvd, Suite 2250
Houston, TX 77056
Tel: 713-953-4800
Fax: 713-977-4620
www.arcadis.com
Texas Registered Engineering Firm F-533

SURVEYED BY: AMANI ENGR.
FB NO. P-6335

CITY OF HOUSTON
HOUSTON PUBLIC WORKS

LIFT STATION REHABILITATION & RECONSTRUCTION CONSENT DECREE

TREE PROTECTION PLAN – II

SHEET 2 OF 4

WBS NUMBER	FOR CITY OF HOUSTON USE ONLY
R-000267-0175-4	
DRAWING SCALE	
AS NOTED	
CITY OF HOUSTON PM	
NP NAWARAJ PANTA, P.E.	
SHEET NO. 310 OF 312	

FILE PATH: C:\Users\Ned\Desktop\Work For Craig\ARCADIS CMAR\ARCADIS CMAR TP-2.dwg
PLOT STYLE: CNKoehl.ctb PLOTTED: 12/3/2025 11:30 AM

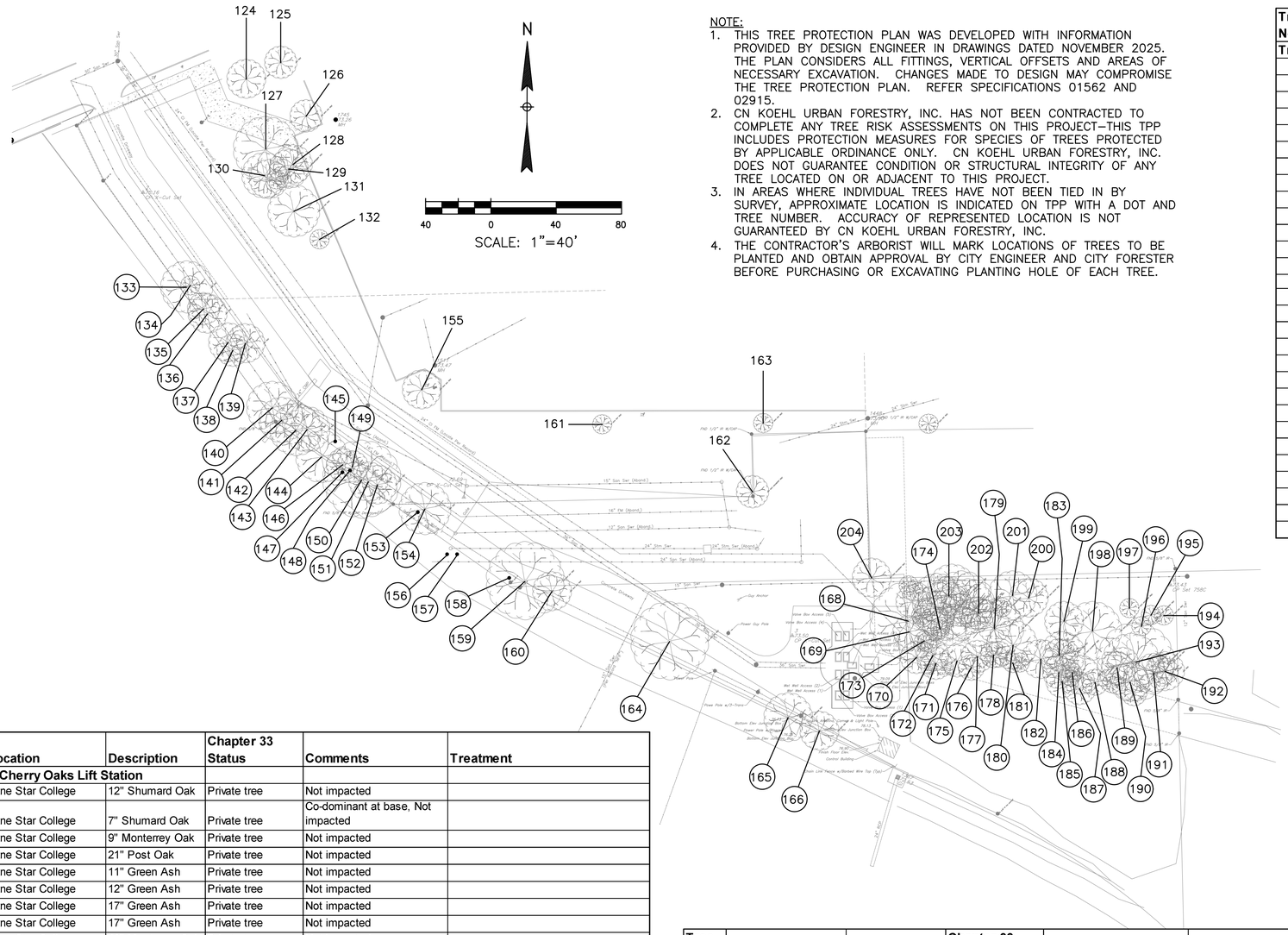

NOTE:
1. THIS TREE PROTECTION PLAN WAS DEVELOPED WITH INFORMATION PROVIDED BY DESIGN ENGINEER IN DRAWINGS DATED NOVEMBER 2025. THE PLAN CONSIDERS ALL FITTINGS, VERTICAL OFFSETS AND AREAS OF NECESSARY EXCAVATION. CHANGES MADE TO DESIGN MAY COMPROMISE THE TREE PROTECTION PLAN. REFER SPECIFICATIONS 01562 AND 02915.
2. CN KOEHL URBAN FORESTRY, INC. HAS NOT BEEN CONTRACTED TO COMPLETE ANY TREE RISK ASSESSMENTS ON THIS PROJECT–THIS TPP INCLUDES PROTECTION MEASURES FOR SPECIES OF TREES PROTECTED BY APPLICABLE ORDINANCE ONLY. CN KOEHL URBAN FORESTRY, INC. DOES NOT GUARANTEE CONDITION OR STRUCTURAL INTEGRITY OF ANY TREE LOCATED ON OR ADJACENT TO THIS PROJECT.
3. IN AREAS WHERE INDIVIDUAL TREES HAVE NOT BEEN TIED IN BY SURVEY, APPROXIMATE LOCATION IS INDICATED ON TPP WITH A DOT AND TREE NUMBER. ACCURACY OF REPRESENTED LOCATION IS NOT GUARANTEED BY CN KOEHL URBAN FORESTRY, INC.
4. THE CONTRACTOR'S ARBORIST WILL MARK LOCATIONS OF TREES TO BE PLANTED AND OBTAIN APPROVAL BY CITY ENGINEER AND CITY FORESTER BEFORE PURCHASING OR EXCAVATING PLANTING HOLE OF EACH TREE.

Tree No.	Location	Description	Chapter 33 Status	Comments	Treatment
Trees at Cherry Oaks Lift Station					
176	Cherry Oak Lift Station	13" Ligustrum	Not ordinance tree	Remove for detention pond	Remove tree, No replacement required
177	Cherry Oak Lift Station	15" Sugarberry	Not ordinance tree	Remove for detention pond	Remove tree, No replacement required
178	Cherry Oak Lift Station	10" Water Oak	Protected tree	Remove for detention pond	Remove tree, 10" replacement require
179	Cherry Oak Lift Station	17" Sugarberry	Not ordinance tree	Remove for detention pond	Remove tree, No replacement required
180	Cherry Oak Lift Station	18" Sugarberry	Not ordinance tree	Remove for detention pond	Remove tree, No replacement required
181	Cherry Oak Lift Station	9" Sugarberry	Not ordinance tree	Remove for detention pond	Remove tree, No replacement required
182	Cherry Oak Lift Station	13" Ligustrum	Not ordinance tree	Remove for detention pond	Remove tree, No replacement required
183	Cherry Oak Lift Station	14" Sugarberry	Not ordinance tree	Remove for detention pond	Remove tree, No replacement required
184	Cherry Oak Lift Station	8" Sugarberry	Not ordinance tree	Remove for detention pond	Remove tree, No replacement required
185	Cherry Oak Lift Station	11" Sugarberry	Not ordinance tree	Remove for detention pond	Remove tree, No replacement required
186	Cherry Oak Lift Station	10" Sugarberry	Not ordinance tree	Remove for detention pond	Remove tree, No replacement required
187	Cherry Oak Lift Station	17" Sugarberry	Not ordinance tree	Remove for detention pond	Remove tree, No replacement required
188	Cherry Oak Lift Station	7" Sugarberry	Not ordinance tree	Remove for detention pond	Remove tree, No replacement required
189	Cherry Oak Lift Station	15" Sugarberry	Not ordinance tree	Remove for detention pond	Remove tree, No replacement required
190	Cherry Oak Lift Station	13" Sugarberry	Not ordinance tree	Remove for detention pond	Remove tree, No replacement required
191	Cherry Oak Lift Station	11" Sugarberry	Not ordinance tree	Remove for detention pond	Remove tree, No replacement required
192	Cherry Oak Lift Station	11" Ligustrum	Not ordinance tree	Remove for detention pond	Remove tree, No replacement required
193	Cherry Oak Lift Station	17" Water Oak	Protected tree	Remove for detention pond	Remove tree, 17" replacement required
194	Cherry Oak Lift Station	9" Water Oak	Protected tree	Remove for detention pond	Remove tree, 9" replacement required
195	Cherry Oak Lift Station	9" Sugarberry	Not ordinance tree	Remove for detention pond	Remove tree, No replacement required
196	Cherry Oak Lift Station	11" Sugarberry	Not ordinance tree	Remove for detention pond	Remove tree, No replacement required
197	Cherry Oak Lift Station	6" Sugarberry	Not ordinance tree	Remove for detention pond	Remove tree, No replacement required
198	Cherry Oak Lift Station	23" Green Ash	Protected tree	Remove for detention pond	Remove tree, 23" replacement required
199	Cherry Oak Lift Station	16" Sugarberry	Not ordinance tree	Remove for detention pond	Remove tree, No replacement required
200	Cherry Oak Lift Station	8" Sugarberry	Not ordinance tree	Remove for detention pond	Remove tree, No replacement required
201	Cherry Oak Lift Station	18" Sugarberry	Not ordinance tree	Remove for detention pond	Remove tree, No replacement required
202	Cherry Oak Lift Station	11" Sugarberry	Not ordinance tree	Remove for detention pond	Remove tree, No replacement required
203	Cherry Oak Lift Station	21" Sugarberry	Protected tree	Remove for detention pond	Remove tree, 21" replacement required
204	Cherry Oak Lift Station	15" Sugarberry	Not ordinance tree	Remove for storm	Remove tree, No replacement required

TREE PRESERVATION PLAN LEGEND

- 1 — TREE NUMBER/LOCATION
- (1) — TREE TO BE REMOVED
- —X—X— TREE PROTECTION FENCE
- ------ ROOT PRUNING TRENCH

Tree No.	Location	Description	Chapter 33 Status	Comments	Treatment
Trees at Cherry Oaks Lift Station					
124	Lone Star College	12" Shumard Oak	Private tree	Not impacted	
125	Lone Star College	7" Shumard Oak	Private tree	Co-dominant at base, Not impacted	
126	Lone Star College	9" Monterrey Oak	Private tree	Not impacted	
127	Lone Star College	21" Post Oak	Private tree	Not impacted	
128	Lone Star College	11" Green Ash	Private tree	Not impacted	
129	Lone Star College	12" Green Ash	Private tree	Not impacted	
130	Lone Star College	17" Green Ash	Private tree	Not impacted	
131	Lone Star College	17" Green Ash	Private tree	Not impacted	
132	Lone Star College	10" Monterrey Oak	Private tree	Not impacted	
133	Cherry Oak Lift Station	6" Green Ash	Not ordinance tree	Easement, Remove for road	Remove tree, No replacement required
134	Cherry Oak Lift Station	20" Green Ash	Not ordinance tree	Easement, Remove for road	Remove tree, No replacement required
135	Cherry Oak Lift Station	11" Green Ash	Not ordinance tree	Easement, Remove for road	Remove tree, No replacement required
136	Cherry Oak Lift Station	18" American Elm	Not ordinance tree	Easement, Remove for road	Remove tree, No replacement required
137	Cherry Oak Lift Station	14" Green Ash	Not ordinance tree	Easement, Remove for road	Remove tree, No replacement required
138	Cherry Oak Lift Station	9" Green Ash	Not ordinance tree	Easement, Remove for road	Remove tree, No replacement required
139	Cherry Oak Lift Station	13" Green Ash	Not ordinance tree	Easement, Remove for road	Remove tree, No replacement required
140	Cherry Oak Lift Station	18" Green Ash	Not ordinance tree	Easement, Remove for road	Remove tree, No replacement required
141	Cherry Oak Lift Station	16" Sugarberry	Not ordinance tree	Easement, Remove for road	Remove tree, No replacement required
142	Cherry Oak Lift Station	18" Green Ash	Not ordinance tree	Easement, Remove for road	Remove tree, No replacement required
143	Cherry Oak Lift Station	15" Green Ash	Not ordinance tree	Easement, Remove for road	Remove tree, No replacement required
144	Cherry Oak Lift Station	23" Green Ash	Not ordinance tree	Easement, Remove for road	Remove tree, No replacement required
145	Cherry Oak Lift Station	16" Green Ash	Not ordinance tree	Easement, Remove for road	Remove tree, No replacement required
146	Cherry Oak Lift Station	11" American Elm	Not ordinance tree	Easement, Remove for road	Remove tree, No replacement required
147	Cherry Oak Lift Station	14" Green Ash	Not ordinance tree	Easement, Remove for road	Remove tree, No replacement required
148	Cherry Oak Lift Station	10" American Elm	Not ordinance tree	Easement, Remove for road	Remove tree, No replacement required
149	Cherry Oak Lift Station	14" American Elm	Not ordinance tree	Easement, Remove for road	Remove tree, No replacement required
150	Cherry Oak Lift Station	21" Green Ash	Not ordinance tree	Easement, Remove for road	Remove tree, No replacement required
151	Cherry Oak Lift Station	15" Green Ash	Not ordinance tree	Easement, Remove for road	Remove tree, No replacement required
152	Cherry Oak Lift Station	17" Green Ash	Not ordinance tree	Easement, Remove for road	Remove tree, No replacement required
153	Cherry Oak Lift Station	7" Green Ash	Not ordinance tree	Easement, Remove for road	Remove tree, No replacement required
154	Cherry Oak Lift Station	19" Sugarberry	Not ordinance tree	Easement, Remove for road	Remove tree, No replacement required
155	Lone Star College	12" Monterrey Oak	Private tree	Not impacted	

Tree No.	Location	Description	Chapter 33 Status	Comments	Treatment
Trees at Cherry Oaks Lift Station					
156	Cherry Oak Lift Station	15" Green Ash	Not ordinance tree	Easement, Remove for road	Remove tree, No replacement required
157	Cherry Oak Lift Station	15" American Elm	Not ordinance tree	Easement, Remove for road	Remove tree, No replacement required
158	Cherry Oak Lift Station	11" Green Ash	Not ordinance tree	Easement, Remove for road	Remove tree, No replacement required
159	Cherry Oak Lift Station	24" Green Ash	Not ordinance tree	Easement, Remove for road	Remove tree, No replacement required
160	Cherry Oak Lift Station	9" Sugarberry	Not ordinance tree	Easement, Remove for road	Remove tree, No replacement required
161	Cherry Oak Lift Station	8" Sugarberry	Not ordinance tree		
162	Cherry Oak Lift Station	11" Sugarberry	Not ordinance tree		
163	Cherry Oak Lift Station	7" Sugarberry	Not ordinance tree		
164	Cherry Oak Lift Station	20" Green Ash	Protected tree	Remove for road	Remove tree, 20" replacement required
165	Cherry Oak Lift Station	15" American Elm	Protected tree	Remove for road	Remove tree, 15" replacement required
166	Cherry Oak Lift Station	11" American Elm	Protected tree	Remove for road	Remove tree, 11" replacement required
167	Cherry Oak Lift Station	12" Sugarberry	Not ordinance tree		
168	Cherry Oak Lift Station	27" American Elm	Protected tree	Remove for detention pond	Remove tree, 27" replacement required
169	Cherry Oak Lift Station	16" Green Ash	Protected tree	Remove for detention pond	Remove tree, 16" replacement required
170	Cherry Oak Lift Station	12" Sugarberry	Not ordinance tree	Remove for detention pond	Remove tree, No replacement required
171	Cherry Oak Lift Station	33" American Elm	Protected tree	Remove for detention pond	Remove tree, 33" replacement required
172	Cherry Oak Lift Station	21" Green Ash	Protected tree	Remove for detention pond	Remove tree, 21" replacement required
173	Cherry Oak Lift Station	10" Ligustrum	Not ordinance tree	Remove for detention pond	Remove tree, No replacement required
174	Cherry Oak Lift Station	13" Sugarberry	Not ordinance tree	Remove for detention pond	Remove tree, No replacement required
175	Cherry Oak Lift Station	19" American Elm	Protected tree	80% dieback, Remove for detention pond	Remove tree, No replacement required

NO.	DATE	REVISION	APP.

C.N. Koehl
Urban Forestry, Inc.
210 Stone Bush Ct. • Katy, Texas 77493
281-391-0022 ckoehl@koehlurbanforestry.com

APPROVED: Craig N. Koehl 11-13-2025

ARCADIS
Infrastructure · Water · Environment · Buildings
1330 Post Oak Blvd, Suite 2250
Houston, TX 77056
Tel: 713-953-4800
Fax: 713-977-4620
www.arcadis.com
Texas Registered Engineering Firm F-533

SURVEYED BY: AMANI ENGR.
FB NO. P-6335

CITY OF HOUSTON
HOUSTON PUBLIC WORKS

LIFT STATION REHABILITATION & RECONSTRUCTION CONSENT DECREE

TREE PROTECTION PLAN – III

SHEET 3 OF 4

WBS NUMBER	FOR CITY OF HOUSTON USE ONLY
R-000267-0175-4	
DRAWING SCALE	
AS NOTED	
CITY OF HOUSTON PM	
NP NAWARAJ PANTA, P.E.	
SHEET NO. 311 OF 312	

FILE PATH: C:\Users\Ned\Desktop\Work For Craig\ARCADIS CMAR\ARCADIS CMAR TP-3.dwg
PLOT STYLE: CNKoehl.ctb PLOTTED: 12/3/2025 11:30 AM

Tree Removal List

Tree No.	Location	Description	Replacement requirement
133	Cherry Oak Lift Station	6" Green Ash	0
134	Cherry Oak Lift Station	20" Green Ash	0
135	Cherry Oak Lift Station	11" Green Ash	0
136	Cherry Oak Lift Station	18" American Elm	0
137	Cherry Oak Lift Station	14" Green Ash	0
138	Cherry Oak Lift Station	9" Green Ash	0
139	Cherry Oak Lift Station	13" Green Ash	0
140	Cherry Oak Lift Station	18" Green Ash	0
141	Cherry Oak Lift Station	16" Sugarberry	0
142	Cherry Oak Lift Station	18" Green Ash	0
143	Cherry Oak Lift Station	15" Green Ash	0
144	Cherry Oak Lift Station	23" Green Ash	0
145	Cherry Oak Lift Station	16" Green Ash	0
146	Cherry Oak Lift Station	11" American Elm	0
147	Cherry Oak Lift Station	14" Green Ash	0
148	Cherry Oak Lift Station	10" American Elm	0
149	Cherry Oak Lift Station	14" American Elm	0
150	Cherry Oak Lift Station	21" Green Ash	0
151	Cherry Oak Lift Station	15" Green Ash	0
152	Cherry Oak Lift Station	17" Green Ash	0
153	Cherry Oak Lift Station	7" Green Ash	0
154	Cherry Oak Lift Station	19" Sugarberry	0
156	Cherry Oak Lift Station	15" Green Ash	0
157	Cherry Oak Lift Station	15" American Elm	0
158	Cherry Oak Lift Station	11" Green Ash	0
159	Cherry Oak Lift Station	24" Green Ash	0
160	Cherry Oak Lift Station	9" Sugarberry	0
164	Cherry Oak Lift Station	20" Green Ash	20
165	Cherry Oak Lift Station	15" American Elm	15
166	Cherry Oak Lift Station	11" American Elm	11
168	Cherry Oak Lift Station	27" American Elm	27
169	Cherry Oak Lift Station	16" Green Ash	16
170	Cherry Oak Lift Station	12" Sugarberry	0
171	Cherry Oak Lift Station	33" American Elm	33
172	Cherry Oak Lift Station	21" Green Ash	21
173	Cherry Oak Lift Station	10" Ligustrum	0
174	Cherry Oak Lift Station	13" Sugarberry	0
175	Cherry Oak Lift Station	19" American Elm	0
176	Cherry Oak Lift Station	13" Ligustrum	0
177	Cherry Oak Lift Station	15" Sugarberry	0
178	Cherry Oak Lift Station	10" Water Oak	10
179	Cherry Oak Lift Station	17" Sugarberry	0
180	Cherry Oak Lift Station	18" Sugarberry	0
181	Cherry Oak Lift Station	9" Sugarberry	0
182	Cherry Oak Lift Station	13" Ligustrum	0
183	Cherry Oak Lift Station	14" Sugarberry	0
184	Cherry Oak Lift Station	8" Sugarberry	0
185	Cherry Oak Lift Station	11" Sugarberry	0
186	Cherry Oak Lift Station	10" Sugarberry	0
187	Cherry Oak Lift Station	17" Sugarberry	0
188	Cherry Oak Lift Station	7" Sugarberry	0
189	Cherry Oak Lift Station	15" Sugarberry	0
190	Cherry Oak Lift Station	13" Sugarberry	0
191	Cherry Oak Lift Station	11" Sugarberry	0
192	Cherry Oak Lift Station	11" Ligustrum	0
193	Cherry Oak Lift Station	17" Water Oak	17
194	Cherry Oak Lift Station	9" Water Oak	9
195	Cherry Oak Lift Station	9" Sugarberry	0
196	Cherry Oak Lift Station	11" Sugarberry	0
197	Cherry Oak Lift Station	6" Sugarberry	0
198	Cherry Oak Lift Station	23" Green Ash	23
199	Cherry Oak Lift Station	16" Sugarberry	0
200	Cherry Oak Lift Station	8" Sugarberry	0
201	Cherry Oak Lift Station	18" Sugarberry	0
202	Cherry Oak Lift Station	11" Sugarberry	0
203	Cherry Oak Lift Station	21" Sugarberry	21
204	Cherry Oak Lift Station	15" Sugarberry	0
205	10662 Emnora	18" Water Oak	18
		TOTAL REPLACEMENT INCHES REQUIRED	**241**

Tree Replacement List

Quantity	Caliper Size	Species	Container/Tree Spade size
		TOTAL REPLACEMENT INCHES INCLUDED IN PLAN	**0**

NOTE: Tree replacement locations are not shown on plans. Contractor must coordinate with City of Houston Urban Forestry and Houston Public Works prior to PURCHASING trees. This project may not have adequate room for all required replacement trees without creating regulatory sign or traffic/pedestrian visibility issues. Number of trees and planting locations will be determined by City of Houston Urban Forestry in construction phase. Trees that are planted are to be maintained and watered for 2 years following planting per standard spec 02915. Timing of planting may be delayed in periods of drought with mandatory water restrictions in place-timing to be coordinated with City of Houston Urban Forestry. Trees in esplanade groupings to be planted in common bed with 4" of hardwood mulch between trees.

Trees are to be maintained and watered for 2 years following planting per standard spec 02915. Timing of planting may be delayed in periods of drought with mandatory water restrictions in place-timing to be coordinated with City of Houston Forestry.

Tree replacement locations shall comply with Houston Public Works spec sections 02811, 02911, 02912, 02915, 02921 & 02922. In general trees along sides of street right of ways shall be no closer than 3' to back of curb or 20' from another tree. Trees in medians shall be no closer than 6' back of curb, 75' from an intersection, 50' to a median cut, or 20' from another tree. Contractor to coordinate locations with City Forestry and HPW prior to PURCHASING trees. All replacement trees called out on plans may not be planted on project relative to coordination with listed parties.

Cash Allowance Due Parks from HPW for Balance of Mitigation Not Planted on Project

	Required Mitigation total	Mitigation rate/inch	
0-5.99"	0	$ 289.47	$ -
6-11.99"	30	496.64	$ 14,899.20
12" +	241	662.19	$ 159,587.79
		TOTAL REQUIRED MITIGATION FEE	**$ 174,486.99**

Arboriculturally Significant Tree List

Tree No.	Location	Description
14	Median	24" Live Oak
19	Not available	25" Live Oak
23	Not available	24" Live Oak
44	Not available	24" Live Oak
50	12402 Shadowmist	26" Live Oak
56	12402 Shadowmist	25" Live Oak
79	Not available	33" Live Oak
80	Not available	24" Live Oak
92	2403 Shadowknoll	28" Live Oak
94	2403 Shadowknoll	24" Live Oak
98	Median	28" Live Oak
101	City Park	32" Live Oak
106	City Park	32" Live Oak
107	City Park	24" Live Oak
118	Not available	26" Live Oak
168	Cherry Oak Lift Station	27" American Elm
171	Cherry Oak Lift Station	33" American Elm

Trees Identified by City of Houston Forestry/Parks & Recreation Department as Arboriculturally Significant are identified here and/or in treatment schedule included on TPP sheets. Arboriculturally Significant trees are to be pruned under direct supervision of City of Houston Forestry. Minimal pruning will be allowed for construction equipment access, and in some cases no pruning will be allowed. Contractor must review conditions around and/or under the canopy of Arboriculturally Significant trees and consider restrictions when preparing cost estimate and planning construction equipment that will be necessary to accomplish design installation with minimal to no tree pruning.

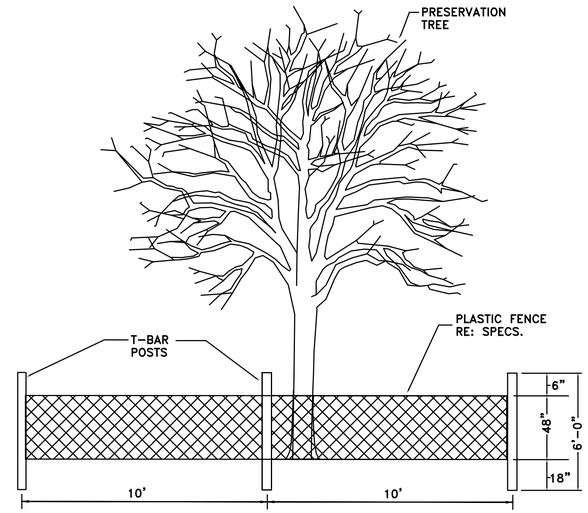

TREE PROTECTION FENCING DETAIL A
NOT TO SCALE

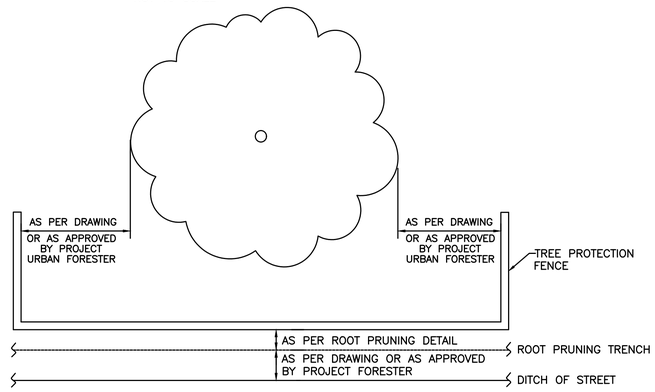

TREE PROTECTION FENCING DETAIL B
NOT TO SCALE

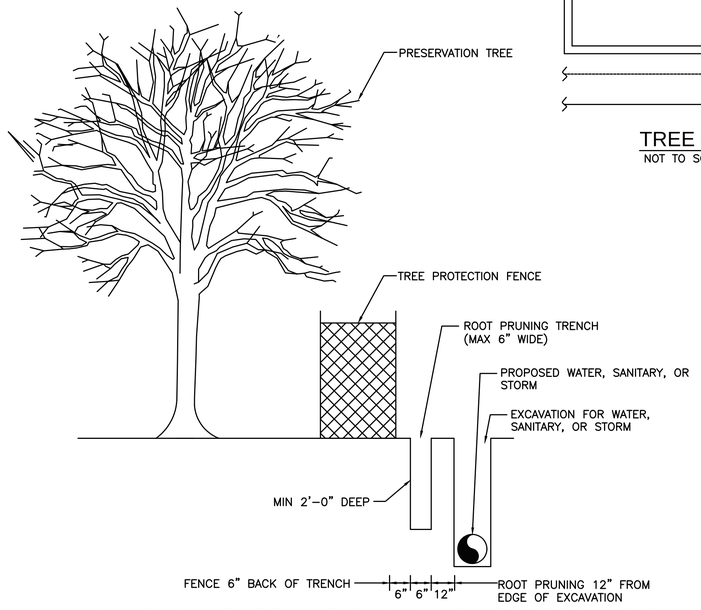

ROOT PRUNE FOR WATER, SANITARY, OR STORM LINE
NOT TO SCALE

NO.	DATE	REVISION	APP.

C.N. Koehl
Urban Forestry, Inc.
210 Stone Bush Ct. ◦ Katy, Texas 77493
281-391-0022 ckoehl@koehlurbanforestry.com

APPROVED: Craig N. Koehl 11-13-2025

ARCADIS
Infrastructure · Water · Environment · Buildings
1330 Post Oak Blvd, Suite 2250
Houston, TX 77056
Tel: 713-953-4800
Fax: 713-977-4620
www.arcadis.com
Texas Registered Engineering Firm F-533

SURVEYED BY: AMANI ENGR.
FB NO. P-6335

CITY OF HOUSTON
HOUSTON PUBLIC WORKS

LIFT STATION REHABILITATION & RECONSTRUCTION CONSENT DECREE

TREE PROTECTION PLAN – IV

SHEET 4 OF 4

WBS NUMBER	FOR CITY OF HOUSTON USE ONLY
R-000267-0175-4	
DRAWING SCALE	
AS NOTED	
CITY OF HOUSTON PM	
NP NAWARAJ PANTA, P.E.	
SHEET NO. 312 OF 312	

FILE PATH: C:\Users\Ned\Desktop\Work For Craig\ARCADIS CMAR\ARCADIS CMAR TP-4.dwg
PLOT STYLE: CNKoehl.ctb PLOTTED: 12/3/2025 11:30 AM