CITY OF HOUSTON

HOUSTON PUBLIC WORKS

CAPITAL PROJECTS

LIFT STATION REHABILITATION AND RECONSTRUCTION DESIGN (TRAILWOOD LIFT STATION, LAKE VILLAGE LIFT STATION)

WBS NO. R-000267-178A-3

90% SUBMITTAL

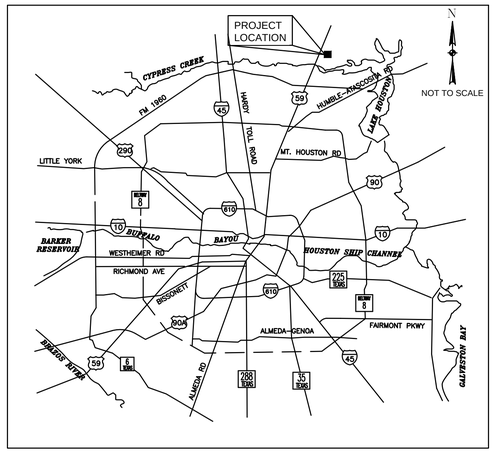

LOCATION MAP

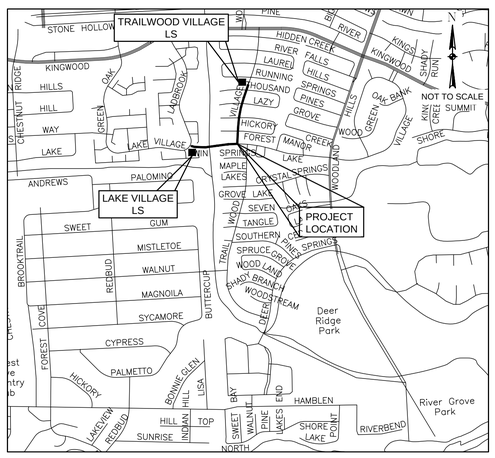

VICINITY MAP
KEY MAP NO 336B & 336C
COUNCIL DISTRICT B

MAYOR
JOHN WHITMIRE

CONTROLLER
CHRIS HOLLINS

DISTRICT COUNCIL MEMBERS

AMY PECK — DISTRICT A
TARSHA JACKSON — DISTRICT B
ABBIE KAMIN — DISTRICT C
CAROLYN EVANS-SHABAZZ — DISTRICT D
FRED FLICKINGER — DISTRICT E
TIFFANY D. THOMAS — DISTRICT F
MARY NAN HUFFMAN — DISTRICT G
MARIO CASTILLO — DISTRICT H
JOAQUIN MARTINEZ — DISTRICT I
EDWARD POLLARD — DISTRICT J
MARTHA CASTEX-TATUM — DISTRICT K

COUNCIL MEMBERS AT-LARGE

JULIAN RAMIREZ — POSITION 1
WILLIE DAVIS — POSITION 2
TWILA CARTER — POSITION 3
ALEJANDRA SALINAS — POSITION 4
SALLIE ALCORN — POSITION 5

RPS A TETRA TECH COMPANY
Texas PE Firm Reg. #F-929
575 N. Dairy Ashford, Suite 700, Houston, Texas 77079
T +1 281 589 7257 E usinfrastructure@rpsgroup.com

SURVEYED BY: KUO INC
FB NO. F-4578

This document is released for the purposes of interim review only under the authority of:

Jeremy Austin, P.E.
Texas P.E. No. 116816
09/11/2026

It is not to be used for bidding, construction, or permitting purposes.

PARKS-FORESTRY DEPT.

METRO

HOUSTON WATER

TRANSPORTATION & DRAINAGE OPERATIONS

CAPITAL PROJECTS

SURVEY

CITY ENGINEER DATE

DIRECTOR OF HOUSTON PUBLIC WORKS DATE

FOR CITY OF HOUSTON USE ONLY

SHEET NO 1 OF 147 SHEETS

SHEET NO.	DRAWING NO.	SHEET TITLE
GENERAL		
1	G–1	COVER
2	G–2	SHEET INDEX
3	G–3	HCED REVIEW
4	G–4	HCFCD REVIEW
5	G–5	ABBREVIATIONS
6	G–6	SYMBOLS
7–8	G–7 – G–8	GENERAL NOTES
9–12	SC–1 – SC–4	SURVEY DATA
13–14	BL–1 – BL–2	BORE LOGS
TRAILWOOD VILLAGE LS		
15	TV–FC–1	FIRMETTE – TRAILWOOD VILLAGE LS
16	TV–C–1	EXISTING SITE PLAN – TRAILWOOD VILLAGE LS
17	TV–C–2	DEMOLITION SITE PLAN – TRAILWOOD VILLAGE LS
LAKE VILLAGE LS		
18	LV–FC–1	FIRMETTE – LAKE VILLAGE LS
19	LV–C–1	EXISTING SITE PLAN – LAKE VILLAGE LS
20	LV–C–2	DEMOLITION SITE PLAN – LAKE VILLAGE LS
21	LV–C–3	GRADING & DRAINAGE PLAN – LAKE VILLAGE LS
22	LV–C–4	PROPOSED SITE PLAN – LAKE VILLAGE LS
GRAVITY SEWER		
23–38	GS–C–1 – GS–C–16	PLAN & PROFILES
39	GS–C–17	STORM WATER POLLUTION PREVENTION PLAN (SWPPP)
40	GS–C–18	TCP PHASING PLAN
41–44	GS–C–19 – GS–C–22	TREE PROTECTION PLAN
MECHANICAL		
45	M–1	MECHANICAL ABBREVIATIONS, LEGENDS AND NOTES
46	LV–M–1	LAKE VILLAGE LS MECHANICAL PLAN AND SECTION
47	STD–M–1	STANDARD MECHANICAL DETAILS
48	P–1	PLUMBING ABBREVIATIONS, LEGENDS AND NOTES
49	LV–P–1	LAKE VILLAGE LS PLUMBING PLAN AND SCHEDULES
50–51	STD–P–1 – STD–P–2	STANDARD PLUMBING DETAILS
STRUCTURAL		
52–53	S–1 – S–2	STRUCTURAL GENERAL NOTES
54	LV–S–1	LAKE VILLAGE LS STRUCTURAL PLANS
55	LV–S–2	LAKE VILLAGE LS STRUCTURAL SECTIONS
56–57	STD–S–1 – STD–S–2	STRUCTURAL STANDARD DETAILS
PROCESS		
58	D–1	TRAILWOOD LIFT STATION DEMOLITION PLAN
59	D–2	LAKE VILLAGE LIFT STATION DEMOLITION PLAN
60	D–3	LAKE VILLAGE LS PLANS AND SECTIONS
61	D–4	LAKE VILLAGE LS SECTIONS
62–66	STD–D–1 – STD–D–5	PROCESS DETAILS
STANDARD DETAILS		
67	STD–C–1	BIKE LANE DETAILS
68	STD–C–2	FENCE DETAILS
69	STD–C–3	STORM WATER POLLUTION PREVENTION PLAN DETAILS
70	STD–C–4	SWPPP DETAILS
71	STD–C–5	STORM SEWER DETAILS
72–83	STD–C–6 – STD–C–17	PAVEMENT DETAILS
84–89	STD–C–18 – STD–C–23	WASTE WATER DETAILS
90–93	STD–C–24 – STD–C–27	FORCE MAIN DETAILS
94–108	STD–C–28 – STD–C–42	TRAFFIC CONTROL DETAILS
ELECTRICAL		
109	TW–E–1	TRAILWOOD LIFT STATION EXISTING SITE PLAN
110	TW–E–2	TRAILWOOD LIFT STATION DEMOLITION SITE PLAN
111	TW–E–3	TRAILWOOD LIFT STATION DEMOLITION NOTES
112	LV–E–1	LAKE VILLAGE LS ELECTRICAL DEMOLITION SITE PLAN
113	LV–E–2	LAKE VILLAGE LS ELECTRICAL PROPOSED SITE PLAN
114	LV–E–3	LAKE VILLAGE LS ELECTRICAL SINGLE–LINE DIAGRAM
115	LV–E–4	LAKE VILLAGE LS ELECTRICAL THREE–LINE DIAGRAM
116	LV–E–5	LAKE VILLAGE LS ENLARGED ELECTRICAL LIFT STATION PLAN
117	LV–E–6	LAKE VILLAGE LS PROPOSED ELECTRICAL PLATFORM LAYOUT
118	LV–E–7	LAKE VILLAGE LS SERVICE RACK DETAIL
119	LV–E–8	LAKE VILLAGE LS ELECTRICAL JUNCTION BOX DETAIL
120	LV–E–9	LAKE VILLAGE LS ELECTRICAL SERVICE POLE DETAIL
121	LV–E–10	LAKE VILLAGE LS ELECTRICAL TYPICAL DETAILS
122	LV–E–11	LAKE VILLAGE LS ELECTRICAL YARD LIGHT COMM. POLE DETAILS
123	LV–E–12	LAKE VILLAGE LS ELECTRICAL CONDUIT SCHEDULE
124	LV–I–1	LAKE VILLAGE LS PROCESS & INSTRUMENTATION DIAGRAM–I
125	LV–I–2	LAKE VILLAGE LS PROCESS & INSTRUMENTATION DIAGRAM–II
126	LV–I–3	LAKE VILLAGE LS COMMUNICATION DIAGRAM
127	LV–I–4	LAKE VILLAGE LS CONTROL CABINET EQUIPMENT LAYOUT & SCHEDULE
128	LV–I–5	LAKE VILLAGE LS CONTROL CABINET EQUIPMENT LAYOUT–I
129	LV–I–6	LAKE VILLAGE LS CONTROL CABINET EQUIPMENT LAYOUT–II
130	LV–I–7	LAKE VILLAGE LS CONTROL CABINET EQUIPMENT LAYOUT–III
131	LV–I–8	LAKE VILLAGE LS CONTROL PANEL CONTROL WIRING DIAGRAM–I
132	LV–I–9	LAKE VILLAGE LS CONTROL PANEL CONTROL WIRING DIAGRAM–II
133	LV–I–10	LAKE VILLAGE LS CONTROL PANEL CONTROL WIRING DIAGRAM–III
134	LV–I–11	LAKE VILLAGE LS CONTROL PANEL CONTROL WIRING DIAGRAM–IV
135	LV–I–12	LAKE VILLAGE LS PUMP NO.1 CONTROL WIRING DIAGRAM
136	LV–I–13	LAKE VILLAGE LS PUMP NO.2 CONTROL WIRING DIAGRAM
137	LV–I–14	LAKE VILLAGE LS PUMP NO.3 CONTROL WIRING DIAGRAM
138	STD–E–1	ELECTRICAL LEGENDS & SYMBOLS–I
139	STD–E–2	ELECTRICAL LEGENDS & SYMBOLS–II
140	STD–E–3	ELECTRICAL LIGHTING SCHEDULE
141	STD–E–4	ELECTRICAL GENERAL NOTES
142	STD–E–5	ELECTRICAL TYPICAL DETAILS–I
143	STD–E–6	ELECTRICAL TYPICAL DETAILS–II
144	STD–E–7	RADAR LEVEL TRANSMITTER GAUGING SYSTEM–I
145	STD–E–8	RADAR LEVEL TRANSMITTER GAUGING SYSTEM–II
146	STD–E–9	INSTRUMENTATION LEGENDS & SYMBOLS–I
147	STD–E–10	INSTRUMENTATION LEGENDS & SYMBOLS–II

RPS A TETRA TECH COMPANY
Texas PE Firm Reg. #F-929
575 N. Dairy Ashford, Suite 700,
Houston, Texas 77079
T +1 281 589 7257
E usinfrastructure@rpsgroup.com

SURVEYED BY: KUO Inc.
FB NO. F–4578

This document is released for the purposes of interim review only under the authority of:

Jeremy Austin, P.E.
Texas P.E. No. 116816
09/11/2026

It is not to be used for bidding, construction, or permitting purposes.

CITY OF HOUSTON
HOUSTON PUBLIC WORKS

LIFT STATION REHABILITATION & RECONSTRUCTION

SHEET INDEX
G–2

WBS NUMBER	FOR CITY OF HOUSTON USE ONLY
R–000267–178A–3	
DRAWING SCALE	
AS NOTED	
CITY OF HOUSTON PM	
TAHA LOTIA	
SHEET NO. 2 OF 147	

FILE PATH: C:\Users\andres.martinezjr\DC\ACCDocs\Tetra Tech Inc\200–317106–24001 COH LS Rehab Design\Project Files\CAD\R–000267–01 SHEET INDEX–1.dwg PLOTTED: 9/9/2026 4:53 PM

1. PAVING

(FOR EXISTING OR PROPOSED HC PUBLIC R.O.W.)

CONCRETE

DESIGN THICKNESS OF PAVING (IN.)	STABILIZED SUBGRADE DEPTH (IN.)	DESIGN STRENGTH OF CONCRETE (PSI)	STEEL SPACING LONG. (IN.)	STEEL SPACING TRANS. (IN.)	REINFORCE STEEL SIZE (#4 MIN.)
6	6	4000	12	12	#4

ASPHALT

DESIGN SURFACE COURSE THICKNESS (IN.)	DESIGN SURFACE COURSE TYPE (MATERIAL)	DESIGN BASE COURSE THICKNESS (IN.)	DESIGN BASE COURSE TYPE (MATERIAL)	STABILIZED SUBGRADE DEPTH (IN.)	STABILIZED SUBGRADE TYPE (MATERIAL)

DRIVEWAYS (IN EXISTING OR PROPOSED HC PUBLIC R.O.W.)

I. NUMBER OF DRIVEWAY APPROACHES PROPOSED INCLUDING WIDENING OR REPAVING EXISTING DRIVEWAYS

DRWY	WIDTH	MATERIAL	CULVERT (Y/N)	CULVERT LENGTH	NEAREST CROSS-STREET	DISTANCE TO CROSS-STREET
1						
2						
3						
4						
5						

II. HARRIS COUNTY STANDARD DRIVEWAY DETAIL APPEARS ON SHEET(S): _____

III. ADDITIONAL DRIVEWAY TABLE (AS APPLICABLE) APPEARS ON SHEET(S): _____

FIRE APPARATUS ACCESS ROAD

☐ REQUIRED AND SHOWN ON SHEET(S): _____
☐ NOT REQUIRED DUE TO: _____

CURBING

☒ STANDARD 6" CURBING PROPOSED
☐ 4" x 12" CURBING PROPOSED EXCEPT AT MEDIANS AND ISLANDS

2. TRAFFIC

I. MEDIAN CUTS
☐ MEDIAN MODIFICATIONS ARE SHOWN ON SHEET(S): _____
☒ NO MEDIAN CUT OR RELOCATION IS PROPOSED

II. LEFT / RIGHT TURN LANE
☐ LEFT / RIGHT TURN LANE IS SHOWN ON SHEET(S): _____
☒ NO LEFT / RIGHT TURN LANE IS PROPOSED

III. TRAFFIC CONTROL PLAN
☒ TRAFFIC CONTROL SHOWN ON SHEET(S): _____
☐ NO WORK IN HC RIGHT OF WAY

IV. TRAFFIC SIGNAL
☐ EXISTING TRAFFIC SIGNAL DEVICES (BOXES AND LOOPS) SHOWN ON SHEET(S): _____
☐ NEW ☐ REBUILT ☐ MODIFIED TRAFFIC SIGNAL SHOWN ON SHEET(S): _____
☐ HC FIBER PRESENT
☒ NO TRAFFIC SIGNAL

V. TRAFFIC IMPACT ANALYSIS
☐ TRAFFIC IMPACT ANALYSIS APPROVED ON DATE: _____ PROJECT NO.:
☒ NO TRAFFIC IMPACT ANALYSIS REQUIRED AND HC APPROVED
☐ NO NEW TRIPS GENERATED

VI. TRAFFIC VARIANCE
☐ TRAFFIC VARIANCE APPROVED ON DATE: _____ PROJECT NO.: _____

3. DESCRIPTION OF PROPERTY

I. LEGAL DESCRIPTION
A. ACREAGE: 0.04
B. ☒ SUBDIVISION: KINGWOOD PLACE SECTION 18
☐ SURVEY & ABSTRACT: _____
C. ADJACENT ROADS: LAKE VILLAGE DR & WESTWOOD LAKE DR

II. PLATTING
A. SUBDIVISION PLAT (CHECK APPLICABLE)
☐ PROPOSED PLAT / REPLAT
☒ RECORDED PLAT / REPLAT
B. STREETS PROPOSED
☐ PUBLIC
☐ PRIVATE
☐ PUBLIC & PRIVATE
☒ NONE
PLAT NAME: RESTRICTED RESERVE "C", REPLAT OF KINGWOOD PLACE SECTION 18

NOTE: FINAL CPC101 REQUIRED FOR PLAN APPROVAL, RECORDED PLAT REQUIRED FOR FINAL INSPECTION.

III. JURISDICTIONS
☒ CITY OF HOUSTON
☐ ETJ, CITY OF HOUSTON
☐ ETJ, CITY OF _____
☐ NO ETJ

IV. HCAD ACCOUNT NOS. (ALL)

V. UNOBSTRUCTED VISIBILITY EASEMENT (U.V.E.)
☐ REQUIRED PER PLANNING COMMISSION / HC REGULATIONS SHOWN ON SHEET(S): _____
☒ NOT REQUIRED PER PLANNING COMMISSION / HC REGULATIONS

4. RESIDENTIAL / SUBDIVISION / STREET DEDICATION DRAINAGE

I. PROPOSED DRAINAGE SYSTEM TYPE
☐ STORM SEWER
☐ ROADSIDE DITCH
☐ LOW IMPACT DEVELOPMENT (LID)

II. DESIGN METHOD USED
☐ CITY OF HOUSTON _____ YEAR FREQUENCY
☐ OTHER: _____

III. DRAINAGE SYSTEM OUTFALLS DIRECTLY TO EXISTING
☐ DETENTION BASIN (APPROVED HC PROJECT NO.): _____
DETENTION BASIN MAINTAINED BY: _____
☐ HCFCD DRAINAGE DITCH UNIT NO.: _____
☐ HC ROADSIDE DITCH (ROAD NAME): _____
☐ HC STORM SEWER (APPROVED HC PROJECT NO.): _____

IV. HC OUTFALL CALCULATIONS
☐ ROADSIDE DITCH OUTFALL:
ALLOWABLE OUTFALL RATE: 0.0027 x _____ LF FRONTAGE = _____ (CFS)
PROPOSED OUTFALL RATE: _____ (CFS), CALCULATIONS PROVIDED ON SHEET(S): _____
☐ STORM SEWER OUTFALL
CAPACITY ALLOCATED TO TRACT FROM D. A. MAP: _____ (CFS)
FROM DRAINAGE AREA MAP DATED: _____
PREPARED BY: _____
APPROVED HC PROJECT NO.: _____
ACTUAL OUTFALL RATE: _____ (CFS), CALCULATIONS PROVIDED ON SHEET(S): _____

V. DETENTION PROVIDED BY
☐ DETENTION BASIN IS PART THIS PLAN SET. SERVICE AREA MAP IS ON SHEET(S): _____
☐ REGIONAL DETENTION BASIN SYSTEM (APPROVED HC PROJECT NO.): _____
PROPOSED STORM SEWER IS SUBMERGED (AGREEMENT MUST BE PROVIDED).
STATIC W.S.E. @ OUTFALL IS _____.

5. COMMERCIAL / OTHER SITE DRAINAGE

I. PROPOSED DRAINAGE AREA
☐ NEW DEVELOPMENT AREA: _____
☐ RE-DEVELOPMENT AREA (NET NEW DEVELOPED AREA): _____
☐ LOW IMPACT DEVELOPMENT (LID)

II. DETENTION VOLUME
NEW AREA _____ X * = _____ ACRE FEET DETENTION REQUIRED
*☐ .65 (CHANNEL)
*☐ .75 (STM SWR)
*☐ 1.00 (RD. DITCH)
*☐ OTHER:
PROPOSED DETENTION VOLUME = _____ ACRE FEET
PROPOSED DETENTION VOLUME CALCULATIONS ARE SHOWN ON SHEET(S): _____
DETENTION VOLUME PROVIDED BY EXISTING DETENTION BASIN
APPROVED HC PROJECT NO.: _____
DETENTION BASIN SERVICE AREA MAP IS PROVIDED ON SHEET(S): _____

III. OUTFALL
OUTFALL TO ☐ HC ROADSIDE DITCH
☐ EXISTING HC STORM SEWER
☐ OTHER _____
☐ HC ROADSIDE DITCH OUTFALL:
PROPOSED OUTFALL RATE: _____ (CFS), CALCULATIONS PROVIDED ON SHEET(S): _____
ALLOWABLE OUTFALL RATE: 0.0027 x _____ LF FRONTAGE = _____ (CFS)
☐ HC STORM SEWER OUTFALL:
CAPACITY ALLOCATED TO TRACT FROM D. A. MAP: _____ (CFS)
FROM DRAINAGE AREA MAP DATED: _____
PREPARED BY: _____
APPROVED HC PROJECT NO.: _____
ACTUAL OUTFALL RATE: _____ (CFS), CALCULATIONS PROVIDED ON SHEET(S): _____

IV. PUMPED DETENTION FACILITIES
VOLUME THAT GRAVITY FLOWS: _____ ACRE FEET
VOLUME THAT IS PUMPED: _____ ACRE FEET
ENTRANCE VELOCITY INTO ROADSIDE DITCH OR STORM SEWER: _____
PUMP SPECIFICATIONS AND AUTOMATIC SHUTOFF PLAN FOR ROADSIDE DITCH & STORM SEWER OUTFALLS APPEAR ON SHEET(S): _____

V. FLOW RESTRICTOR SIZE
OUTFALL PIPE SIZE: _____
RESTRICTOR PIPE SIZE: _____
ON SHEET(S): _____

6. OFFSITE SHEET FLOW (100 YEAR)

OFFSITE SHEET FLOW MAPPING, TOTAL DISCHARGE CALCULATIONS, AND DESIGN ACCOMMODATIONS ARE SHOWN ON SHEET(S): _____

TOTAL ACREAGE = _____ (AC.)
TOTAL DISCHARGE = _____ (CFS)

☐ ALL OFFSITE SHEET FLOW FROM ADJACENT PROPERTIES IDENTIFIED AND PROPERLY ACCOUNTED FOR IN THE PROJECT.
☐ SIGNING ENGINEER HEREBY CERTIFIES THAT THESE AREAS HAVE BEEN ADDRESSED.

7. STORMWATER QUALITY

I. SWPPP: CONSTRUCTION MEASURES (COMPLETE FOR ALL PROJECTS)
NUMBER OF ACRES DISTURBED: _____
☐ DISTURBS >1AC. SITE PLAN & DETAILS ON SHEET(S): _____
☒ DISTURBS <1AC. N/A

II. APPLICABILITY FOR PERMANENT FEATURES (COMPLETE FOR ALL PROJECTS)
EXEMPT NEW DEVELOPMENT:
☐ PROJECT IS ON A PARCEL, WITHIN A LARGER COMMON PLAN OF DEVELOPMENT OR SALE, LESS THAN 5 ACRES.
THIS EXEMPTION IS VERIFIED WITH THE PLAT AND/OR GENERAL PLAN ON THE PROPERTY.

EXEMPT REDEVELOPMENT:
☐ THE INCREASE IN THE TOTAL AMOUNT OF IMPERVIOUS SURFACE, CURRENT PROJECT AND ANY SINCE 10/01/2001, ON A PREVIOUSLY DEVELOPED 5 ACRE OR LARGER PARCEL, INDIVIDUALLY AND/OR CONTIGUOUSLY OWNED, IS LESS THAN 1 ACRE.
NEW IMPERVIOUS:

CURRENT PROJECT	PREVIOUS PROJECT(S) TOTAL	TOTAL (CURRENT+PREVIOUS)

EXEMPT GRANDFATHERED:
☒ DRAINAGE FROM THIS PROJECT OUTFALLS DIRECTLY INTO AN EXISTING AND APPROVED DRAINAGE SYSTEM PRIOR TO 10/01/2001 WITH NO NEW DETENTION REQUIREMENT. INCLUDE THE ORIGINAL DRAINAGE AREA MAP OF THAT SYSTEM FOR VERIFICATION.
D.A. MAP NAME: _____ DATE: _____ APPROVED HC PROJECT NO.: _____

III. GENERAL
☒ PROJECT'S SWQ REQUIREMENTS FALL WITHIN THE JURISDICTION OF: CITY OF HOUSTON (ONLY COMPLETE IF OUTSIDE OF UNINCORPORATED HARRIS COUNTY)
☐ STORMWATER QUALITY PERMIT REQUIREMENT IS COVERED BY:
☐ EXISTING SWQMP
PROJECT TITLE: _____
HC PROJECT NO.: _____ HC SWQ PERMIT NO.: _____
SWQ SERVICE AREA MAP INCLUDED ON SHEET(S): _____
☐ INDUSTRIAL PERMITTING. (IAC AND SUPPORTING DOCUMENTATION MUST BE SUBMITTED)
PERMIT NO: _____

IF THE PROJECT IS NOT EXEMPT, OUTSIDE OF HARRIS COUNTY'S JURISDICTION, OR COVERED BY AN EXISTING SWQMP, A STORMWATER QUALITY MANAGEMENT PLAN IS REQUIRED.

IV. PERMANENT SWQ FEATURES (COMPLETE IF NOT EXEMPT)
☐ SITE PLAN ON SHEET(S): _____
☐ VEGETATIVE CONTROLS USED: (FILTER STRIP, GRASSY SWALE, URBAN FORESTRY, LID)
DETAILS AND CALCULATIONS APPEAR ON SHEET(S): _____
☐ BASIN STRUCTURE USED (WET, DRY, WETLANDS)
STRUCTURAL CONTROL IN BASIN: _____
DETAILS/CALCULATIONS ON SHEET(S): _____
☐ HYDRODYNAMIC TYPE SEPARATOR MODEL: _____
DETAILS/CALCULATIONS ON SHEET(S): _____
☐ OTHER(S):
STRUCTURAL CONTROL(S): _____
DETAILS/CALCULATIONS ON SHEET(S): _____

8. FLOODPLAIN STATUS

I. GENERAL INFORMATION
FIRM PANEL(S) FOR PROPERTY: 48201C0315L
FIRM PANEL(S) DATE: 6/18/2007
STATUS OF PROPERTY ON MAP
☒ ENTIRELY LOCATED IN UNSHADED ZONE X
☐ LOCATED PARTIALLY OR ENTIRELY IN ANY A ZONE OR SHADED ZONE X, DELINEATE FLOODPLAIN BOUNDARY ON CONSTRUCTION DRAWINGS (DRAINAGE LAYOUT PG. NO._____) (1% BASE FLOOD LEVEL _____) (0.2% BASE FLOOD LEVEL_____)
☐ SITE REMOVED FROM FLOODPLAIN BY LOMR, LOMR-F, LOMA CASE NO._____ REVISED FLOODPLAIN IS SHOWN ON SHEET(S): _____

II. ELEVATION INFORMATION
BENCHMARK USED
☒ HARRIS COUNTY FLOODPLAIN REFERENCE MARK
☐ HARRIS-GALVESTON COASTAL SUBSIDENCE DISTRICT BENCHMARK (FOR COASTAL AREAS)
DESCRIPTION OF BENCHMARK INCLUDING ELEVATION, DATUM AND YEAR OF ADJUSTMENT (2001 ADJ.) ELEV. 74.46 FT (NAVD 1988, 2001 ADJ.) ELEV. 74.05 FT (NAVD 1988, (GEOID '18))

III. FLOODPLAIN DETERMINATION BASED ON GROUND ELEVATION
☐ PROPERTY LIES ENTIRELY ABOVE THE 1% BASE FLOOD LEVEL AND IN SHADED ZONE X
☐ PROPERTY LIES PARTIALLY OR ENTIRELY BELOW THE 1% BASE FLOOD LEVEL

IV. FLOODPLAIN STORAGE SUMMARY (APPLIES ONLY TO PORTION OF LAND LOCATED WITHIN FLOODPLAIN AS DELINEATED BY FIRM PANEL)
A. TOTAL VOLUME OF MATERIAL PROPOSED TO BE MOVED OR PLACED WITHIN THE FIRM DELINEATED FLOODPLAIN (FILL, BASE, CONCRETE, ASPHALT, ETC.): BELOW 0.2% BASE FLOOD ELEVATION_____(2001 ADJ.)_____ CUBIC YARDS
B. TOTAL VOLUME OF MATERIAL PROPOSED TO BE REMOVED FROM THE FIRM DELINEATED FLOODPLAIN: BELOW 0.2% BASE FLOOD ELEVATION_____ (2001 ADJ.)_____ CUBIC YARDS
C. FILL AREA & VOLUME CALCULATIONS ARE SHOWN ON SHEET(S): _____

9. WATER AND WASTEWATER

I. COMMERCIAL PROJECTS
DOES THE PROPERTY HAVE UTILITIES?
☐ PROPOSED ☐ EXISTING ☐ NO
CHECK APPLICABLE
☐ PUBLIC WATER & SANITARY
☐ PRIVATE WATER WELL & SEPTIC SYSTEM
☐ PUBLIC WATER & PRIVATE SEPTIC SYSTEM
☐ PRIVATE WATER WELL & PUBLIC SANITARY
☐ LETTER FROM THE DISTRICT / MUNICIPALITY AUTHORIZING MUNICIPALITY AUTHORIZING SERVICE & CONNECTION.
UTILITY DISTRICT / MUNICIPALITY NAME: _____
☐ PROPOSED OR EXISTING SEPTIC TANK(S) AND DISPOSAL AREA(S) SHOWN ON SHEET(S): _____
☐ ALL EXISTING AND PROPOSED UTILITIES ACCURATELY SHOWN & LABELED ON THE SITE PLANS.

NOTE: SEPTIC SYSTEMS REQUIRE HC WASTEWATER REVIEW
HC SEPTIC PERMIT/REQUEST NO. _____

NOTE: DEDICATED UNDERGROUND FIRE LINES MUST BE SUBMITTED TO THE HARRIS COUNTY FIRE PROTECTION GROUP FOR REVIEW AND PERMITTING BY THE UNDERGROUND FIRE LINE CONTRACTOR. CIVIL REVIEW DOES ***NOT*** REVIEW OR APPROVE UNDERGROUND FIRE LINES FOR THE FIRE PROTECTION SYSTEMS.

WASTEWATER TREATMENT PLANTS

HC WWTP REVIEW:
☐ NEW WWTP SITE OR REHAB / EXPANSION OF AN EXISTING WWTP SITE
☐ HARRIS COUNTY DOMESTIC WASTEWATER TREATMENT PLANT EXPRESS REVIEW SHEET ATTACHED AND COMPLETED ACCORDING TO INSTRUCTIONS

10. SIDEWALKS

☐ SIDEWALKS ARE PROPOSED IN THIS DEVELOPMENT
☐ NO SIDEWALKS ARE PROPOSED IN THIS DEVELOPMENT

11. LANDSCAPING

☐ COMMERCIAL BUILDING(S) PROPOSED AND LANDSCAPING SHOWN ON SHEET(S): _____
☒ NO COMMERCIAL BUILDING(S) PROPOSED

12. PERMITS REQUIRED

☐ STORM WATER QUALITY
☐ ORIGINAL ☐ AMENDMENT TO PERMIT NO.: _____
☐ SEPTIC (EXISTING) ☐ SEPTIC (PROPOSED)
☐ CIVIL SITE WORK (PHASE II PERMIT CLASS I (UNSHADED X ZONE))
☐ CIVIL SITE WORK (PHASE II PERMIT CLASS II (ALL OTHER ZONES))
☐ DRIVEWAY WITH CULVERT ☐ DRIVEWAY WITH CURB AND GUTTER
☐ BUILDING(S) IS A CRITICAL FACILITY
☐ BUILDING PERMITS (NO. OF BUILDINGS = _____)
☐ SUBDIVISION INFRASTRUCTURE PHASE II (NO. OF LOTS = _____)
☐ NOTICE OF DETENTION AFFIDAVIT REQUIRED
☐ MUD MAINTENANCE AGREEMENT REQUIRED
☐ STREET DEDICATION

WORK IN HARRIS COUNTY R.O.W.
☐ UTILITY WORK _____
☐ TURN LANE _____
☐ OTHER CONSTRUCTION _____

VIOLATIONS
☐ EXISTING VIOLATIONS ON PROPERTY
VIOLATION NUMBER(S): _____

NOTES:
A PERMIT IS REQUIRED FOR EACH SCOPE OF WORK ON SITE.
A R.O.W. NOTIFICATION IS REQUIRED FOR EACH SCOPE OF WORK IN HC OR HCFCD R.O.W.

BENCHMARK REQUIREMENTS FOR PROPOSED BRIDGES AND OR NEW RESIDENTIAL SUBIDIVSIONS

When the County Engineer has determined that a new benchmark will be required to be established for the proposed project, the developer shall be required to install a benchmark per section 8.0, part 2 of the Harris County Infrastructure Regulations.

Is a new Benchmark required for this project? (*to be determined by Harris County*) [__] yes [__] no

If a new Benchmark is required, the proposed benchmark information is shown on sheet(s): ____

FOR PROJECTS LOCATED IN ANY FLOODPLAIN

Development constructed or placed in accordance with these plans will comply with all provisions of the Regulations of Harris County, Texas for Floodplain Management.

No net fill is allowed in the flood plain and no fill is allowed in the floodway.

FOUNDATION NOTES: (*Applies to only buildings or building additions requiring a class II permit*)

All water heaters, furnaces, air conditioning units, electrical distribution panels, and any other mechanical or electrical equipment must be elevated in accordance with Section 4.05 of Harris County Floodplain regulations.

Any electrical circuit serving a light switch or outlet located below the base (100-year) flood elevation shall be dropped from above and be on a separate breaker.

All materials used below the (100-year) base flood elevation are on approved FEMA Technical Bulletin 2-08 as Class 5 water-resistant, and approved in accordance with FEMA Technical Bulletin 1-08 for foundation openings.

Critical facilities located in the 0.2% or 500yr floodplain or 1% or 100yr floodplain shall have the lowest floor elevated to 3 feet or more above the 0.2% flood elevation, or 24 inches above the crown of the adjacent road, which ever results in a higher elevation.

Floodproofing and sealing measures must be taken to ensure that toxic substances will not be displaced by or released into floodwaters.

Access routes elevated to or above the level of the base flood shall be provided to all critical facilities to the extent possible.

A completed as-built certificate must be submitted after the structure is complete and before it is occupied.

The County Engineer's Office will post a final inspection notice on the structure once all requirements have been met.

No fill may be used to elevate structures in the 1% or 100yr flood plain. Structures may be constructed on an open foundation, such as piers, or on continuous foundation walls with properly sized and located openings. All foundations are required to be designed by a registered professional engineer.

All structures shall be designed to withstand a three second gust basic wind speed of 120mph.

*Completed ***Elevation Certificates** to be submitted: one at permitting, a second after the slab is poured or sub-floor is installed and before the framing starts, and a third is required once construction is finished. *(PER CURRENT FIRM PANEL)*

HARRIS COUNTY OFFICE OF THE COUNTY ENGINEER - PERMIT OFFICE NOTE:

THE PERMIT MANAGER SIGNATURE REPRESENTS THE FOLLOWING:
- THE COMPLETION OF REVIEW OF THESE PLANS
- INTERPOSE NO OBJECTION TO THE PROPOSED DESIGN ON PRIVATE PROPERTY
- APPROVAL OF WORK IN HARRIS COUNTY MAINTAINED RIGHT OF WAY
- APPROVAL OF WORK IN PROPOSED HARRIS COUNTY RIGHT OF WAY THAT IS TO BE ACCEPTED BY THE COUNTY

HCOCE SIGNATURE BLOCK:

THE PROJECT WAS REVIEWED, HOWEVER, THIS DOES NOT MEAN THE ENTIRE PROJECT, INCLUDING ALL SUPPORTING DATA AND CALCULATIONS HAVE BEEN COMPLETELY CHECKED AND VERIFIED. THESE DRAWINGS ARE SIGNED, DATED AND SEALED BY A PROFESSIONAL ENGINEER LICENSED TO PRACTICE IN THE STATE OF TEXAS, WHICH THEREFORE CONVEYS THE ENGINEER'S RESPONSIBILITY AND ACCOUNTABILITY. THIS DOES NOT RELIEVE ANY PARTY FROM COMPLYING WITH APPROPRIATE FEDERAL, STATE AND LOCAL ENVIRONMENTAL RULES, LAWS, AND REGULATIONS AND ANY OTHER LEGALLY ADOPTED REGULATION OR ORDINANCE RELATED TO LAND DEVELOPMENT. IF THE CITY SIGNATURES ARE REQUIRED BY ORDINANCE, COUNTY PERMITS WILL NOT BE ISSUED UNTIL SUCH SIGNATURES ARE OBTAINED. PLAN APPROVAL EXPIRATION TO BE IN ACCORDANCE WITH LOCAL GOVERNEMENT CODE CH. 245.

ENGINEER'S CERTIFICATION

I, Jeremy Austin, A LICENSED PROFESSIONAL ENGINEER IN THE STATE OF TEXAS, DO HEREBY CERTIFY THAT THE INFORMATION PRESENTED ON THIS SHEET IS TRUE AND CORRECT TO THE BEST OF MY KNOWLEDGE AND THAT I AM NOT VIOLATING ANY PROVISION OF THE CURRENT TEXAS ENGINEERING PRACTICE ACT AND RULES CONCERNING THE PRACTICE OF ENGINEERING AND PROFESSIONAL ENGINEERING LICENSURE. I CERTIFY TO THE BEST OF MY KNOWLEDGE THAT THE PLANS IN THEIR ENTIRETY ARE DESIGNED PER THE HARRIS COUNTY ENGINEERING STANDARDS, REGULATIONS, AND GUIDELINES UNLESS PROVIDED A VARIANCE BY THE COUNTY ENGINEER OR HIS DESIGNEE. SHOULD IT BE DEEMED BY HCED STAFF, THAT THE PLANS DO NOT MEET THE COUNTY'S STANDARDS, REGULATIONS AND GUIDELINES AND DID NOT RECEIVE AN APPROVED VARIANCE, THE APPROVAL OF SAID PLANS BECOMES NULL AND VOID AND THE DESIGN PLANS MUST BE CORRECTED AT NO CHARGE TO THE COUNTY.

SEAL

This document is released for the purposes of interim review only under the authority of:

Jeremy Austin, P.E.
Texas P.E. No. 116816
09/11/2026

It is not to be used for bidding, construction, or permitting purposes.

THE COMPLETED PROJECT CONSISTS OF DRAWING SHEETS 1 THRU 147

SIGNATURE _____ DATE _____

REVISIONS

NOTE: REVISION BLOCK IS TO BE USED ONLY FOR CHANGES MADE AFTER PLANS HAVE BEEN APPROVED BY HARRIS COUNTY.

REV. NO.	DATE	SHEET NO.	DESCRIPTION	P.E. INITIAL	HC APPROVED DATE	HC INITIAL

HARRIS COUNTY
OFFICE OF THE COUNTY ENGINEER
REVIEW SHEET

HC PROJECT NO. HCFCD PROJECT NO. SHEET NUMBER 3 OF 147

1. PROPERTY DESCRIPTION

I. LOCATION INFORMATION

A. HARRIS COUNTY COMMISSIONER'S PRECINCT:
☐ 1 ☐ 2 ☒ 3 ☐ 4

B. KEY MAP: 336B & 336C

C. ADDRESS: 1802 LAKE VILLAGE DR & 2451 TRAILWOOD VILLAGE

II. LEGAL DESCRIPTION

A. ACREAGE: 0.04

B. ☒ SUBDIVISION: KINGWOOD PLACE SECTION 18

☐ SURVEY & ABSTRACT:

C. ADJACENT ROADS: LAKE VILLAGE DR & WESTWOOD LAKE DR

III. PLATTING

A. SUBDIVISION PLAT
☐ PROPOSED PLAT / REPLAT
☒ RECORDED PLAT / REPLAT

B. STREETS PROPOSED
☐ PUBLIC
☐ PRIVATE
☐ PUBLIC & PRIVATE
☒ NONE

PLAT NAME:
RESTRICTED RESERVE "C", REPLAT OF KINGWOOD PLACE SECTION 18

IV. JURISDICTIONS

☒ CITY OF HOUSTON
☐ ETJ, CITY OF HOUSTON
☐ ETJ, CITY OF
☐ NO ETJ
☐ UTILITY DISTRICT (NAME)

V. HCAD ACCOUNT NOS. (ALL)

2. SITE DETENTION DRAINAGE

I. PROPOSED DRAINAGE AREA

☐ NEW DEVELOPMENT AREA:
☒ RE-DEVELOPMENT AREA (AMOUNT INCREASED IMPERVIOUS AREA):
☐ LOW IMPACT DEVELOPMENT (LID)
METHOD/DESCRIPTION

II. METHODOLOGY

HCFCD PCPM DETENTION METHOD USED:
☐ METHOD 1 (LESS THAN 20 ACRES)
☐ METHOD 2 (20 ACRES TO 640 ACRES)
☐ METHOD 3 (GREATER THAN 640 ACRES)
☐ OTHER

III. DETENTION VOLUME & OUTFALL

OUTFALL TO:
☐ .65, H.C.F.C.D. CHANNEL, (H.C.F.C.D. UNIT NO.)
☐ .75, EXISTING STORM SEWER (OWNER & OPERATOR)
☐ 1.00, ROADSIDE DITCH, (OWNER & ROAD NAME)
☐ OTHER (OWNER & OPERATOR)

IV. STORMWATER DETENTION BASIN INFORMATION

A. HCFCD PCPM SUMMARY TABLE SEE SHEET _____ OF THESE PLANS.

DETENTION BASIN SERVICE AREA		acres	
STORM EVENT	50% EXCEEDANCE (2-YEAR)	10% EXCEEDANCE (10-YEAR)	1% EXCEEDANCE (100-YEAR)
MAXIMUM ALLOWABLE OUTFLOW (PRE-DEVELOPMENT PEAK FLOW)			
MAXIMUM OUTFLOW PROVIDED (PEAK FLOW FROM BASIN)			
LOWEST NATURAL/FINISHED GROUND OR FINISHED FLOOR ELEVATION ESTIMATE			
DESIGN WATER SURFACE ELEVATION			
MINIMUM STORAGE REQUIRED (ac-ft)			
DETENTION STORAGE PROVIDED (ac-ft)			
STORAGE RATE PROVIDED (ac-ft/ac)			
OUTFLOW VELOCITY INTO CHANNEL (ft/sec)			
DRAIN TIME – 1% ONLY (hours)			
EMERGENCY OVERFLOW (TYPE, SIZE, ELEVATION, ETC.)			

B. DETENTION BASIN TO BE MAINTAINED BY

C. DETENTION SERVICE AREA MAP ON SHEET

D. ADDITIONAL CRITERIA FOR PUMPED DETENTION BASINS
VOLUME OF PUMPED 1% EXCEEDANCE STORAGE VOLUME = _____ ACFT _____ % OF TOTAL VOLUME
MAXIMUM DESIGN OUTFLOW VELOCITY INTO HCFCD CHANNEL = _____ FT/SEC
DRAIN TIME FOR BASIN = _____ HOURS BASED ON _____HEAD CONDITIONS

V. DETENTION PROVIDED IN OTHER PLANS:

HCFCD PROJECT No. _____ DATE SIGNED BY HCFCD:
PLAN TITLE
DETENTION POND SERVICE AREA MAP IS PROVIDED ON SHEET
ENGINEERING FIRM
DETENTION BASIN MAINTAINED BY:

VI. FLOW RESTRICTOR SIZE

OUTFALL PIPE SIZE:
RESTRICTOR PIPE SIZE:
RESTRICTOR PLATE DIMENSION:

VII. DETENTION PROVIDED BY

☐ REGIONAL DETENTION BASIN SYSTEM (APPROVED H.C. PRJ NO.):

FOR PROJECTS LOCATED IN ANY FLOODPLAIN

Development constructed or placed in accordance with these plans will comply with all provisions of the designated Floodplain Administrator.
No net fill is allowed in the flood plain and no fill is allowed in the floodway.

OFFSITE SHEET FLOW: (100 YEAR)

OFFSITE SHEET FLOW MAPPING, TOTAL DISCHARGE CALCULATIONS, AND DESIGN ACCOMODATIONS ARE SHOWN ON SHEET ____ OR, AS PRESENTED IN THE APPROVED DRAINAGE STUDY ENTITLED _____.

TOTAL ACREAGE = ____
TOTAL DISCHARGE = ____

NOTE: ALL OFFSITE SHEET FLOW FROM ADJACENT PROPERTIES MUST BE IDENTIFIED AND PROPERLY ACCOUNTED FOR IN THE PROJECT. THE SIGNING ENGINEER HEREBY CERTIFIES THAT THESE AREAS HAVE BEEN ADDRESSED.

3. SWQ DISCHARGE INTO FCD FACILITY

I. SWPPP: CONSTRUCTION MEASURES. (Must complete)

☐ DISTURBS >1AC. SITE PLAN & DETAILS ON SHEET(S)
☒ DISTURBS <1AC. N/A

*II. APPLICABILITY FOR PERMANENT FEATURES. (Must complete)

EXEMPT NEW DEVELOPMENT:
☐ PROJECT IS ON A PARCEL (A COMMON PLAN OF DEVELOPMENT) LESS THAN 5 ACRES. (Must be verified with plat)

EXEMPT REDEVELOPMENT:
☒ PROJECT DOES NOT MEET THE DEFINITION OF SIGNIFICANT REDEVELOPMENT (Part A,Sec. 2.39 of Regulations of Harris County, Texas for Stormwater Quality Management)

EXEMPT GRANDFATHERED:
☐ PROJECT'S DRAINAGE TIES DIRECTLY INTO AN EXISTING DRAINAGE SYSTEM PRIOR TO OCTOBER 1, 2001.
(FOR VERIFICATION: PROVIDE ORIGINAL DRAINAGE AREA MAP INCLUDING CALCULATIONS)

GENERAL:
☒ PROJECT'S SWQ REQUIREMENTS FALL WITHIN THE JURISDICTION OF: CITY OF HOUSTON
☐ STORMWATER QUALITY PERMIT REQUIREMENT IS COVERED BY AN EXISTING SWQMP WITHIN PROJECT TITLE:
HARRIS COUNTY PROJECT No _____ & SWQ PERMIT No.

STORMWATER QUALITY MANAGEMENT PLAN:
☒ SITE PLAN ON SHEET(S)

III. PERMANENT SWQ FEATURES. (COMPLETE IF NOT EXEMPT)

☐ VEGETATIVE CONTROLS USED: (FILTER STRIP, GRASSY SWALE, URBAN FORESTRY DETAILS AND CALCULATIONS APPEAR ON SHEET(S)
☐ POND STRUCTURE USED (WET, DRY, WETLANDS) DETAILS AND CALCULATIONSAPPEAR ON SHEET(S)
☐ HYDRODYNAMIC TYPE SEPARATOR MODEL:
☐ OTHER(S):

4. FLOOD PLAIN STATUS

I. GENERAL INFORMATION

FIRM PANEL(S) FOR PROPERTY: 48201C0315L
FIRM PANEL(S) DATE: 6/18/2007
STATUS OF PROPERTY ON MAP
☒ ENTIRELY LOCATED IN UNSHADED ZONE "X"
☐ LOCATED PARTIALLY OR ENTIRELY IN ANY "A" ZONE OR SHADED ZONE "X", DELINEATE FLOODPLAIN BOUNDARY ON CONSTRUCTION DRAWINGS (DRAINAGE LAYOUT PG. NO._____) (1% BASE FLOOD LEVEL_____) (0.2% BASE FLOOD LEVEL_____)
☐ SITE REMOVED FROM FLOODPLAIN BY LOMR, LOMR-F, LOMA CASE NO._____ REVISED FLOODPLAIN IS SHOWN ON SHEET____

ELEVATION INFORMATION
BENCHMARK USED
☒ HARRIS COUNTY FLOODPLAIN REFERENCE MARK
☐ HARRIS-GALVESTON COASTAL SUBSIDENCE DISTRICT BENCHMARK (FOR COASTAL AREAS)
DESCRIPTION OF BENCHMARK INCLUDING ELEVATION, DATUM AND YEAR OF ADJUSTMENT *(2001 ADJ.)* ELEV. 74.46 FT (NAVD 1988, 2001 ADJ.)

II. FLOOD PLAIN DETERMINATION BASED ON GROUND ELEVATION

☐ PROPERTY LIES ENTIRELY ABOVE THE BASE FLOOD LEVEL AND IN SHADED ZONE "X"
☐ PROPERTY LIES PARTIALLY OR ENTIRELY BELOW THE BASE FLOOD LEVEL

III. FLOODPLAIN STORAGE SUMMARY

(APPLIES ONLY TO PORTION OF LAND LOCATED WITHIN FEMA REGULATORY FLOODPLAIN).

A. TOTAL VOLUME OF MATERIAL PROPOSED TO BE MOVED OR PLACED WITHIN THE FIRM DELINEATED FLOODPLAIN (FILL, BASE, CONCRETE, ASPHALT, ETC.):
BELOW 0.2% BASE FLOOD ELEVATION (2001 ADJ.) 0 CUBIC YARDS 0

B. TOTAL VOLUME OF MATERIAL PROPOSED TO BE REMOVED FROM THE FIRM DELINEATED FLOODPLAIN:
BELOW 0.2% BASE FLOOD ELEVATION (2001 ADJ.) 0 CUBIC YARDS 0
INCLUDING CALCULATIONS)

C. FILL AREA & VOLUME CALCULATIONS ARE SHOWN ON SHEET N/A

5. WORK IN HCFCD RIGHT-OF-WAY

I. TYPE OF WORK TO BE PERFORMED IN HCFCD HCFCD ROW

A. BOND/NOTIFICATION INFORMATION
☐ HCFCD WATERSHED
☐ HCFCD UNIT No.
☐ NUMBER OF OUTFALLS
☒ UTILITY CROSSING
☐ ROADWAY BRIDGE/CULVERT CROSSING
☐ FILL ACTIVITY
☐ REHABILITATION OF CHANNEL
☐ MAINTENANCE
☐ TEMPORARY CROSSING
☐ TRAIL (LENGTH)
☐ OTHER
COST OF WORK IN HCFCD ROW

II. USACE ENVIRONMENTAL PERMIT

☒ US ARMY CORPS OF ENGINEERS NATIONWIDE PERMIT NUMBER(S)
☐ US ARMY CORPS OF ENGINEERS INDIVIDUAL PERMITS
☐ OTHER
☐ NO PERMITS REQUIRED
EXPLAIN:

III. REFERENCE / BASIS OF DETERMINATION

☐ ENVIRONMENTAL CONSULTANT REPORT
BY
REPORT TITLE
REPORT DATE
☒ OTHER N/A

NOTES:
I. – III. REQUIRED ON PROJECTS WITH WORK IN A HCFCD CHANNEL. PLEASE REFERENCE SECTION 17 OF THE FLOOD CONTROL DISTRICT POLICY, CRITERIA, AND PROCEDURE MANUAL FOR MORE INFORMATION.

IV. HCFCD STANDARD NOTES: SEE SHEET _____ OF THESE PLANS.

V. HCFCD STANDARD DETAILS: SEE SHEET _____ OF THESE PLANS.

VI. HCFCD ACCESS PLAN: SEE SHEET _____ OF THESE PLANS.

VII. REFER TO THE FOLLOWING PLAN SHEETS:
FOR EXISTING AND PROPOSED RIGHT(S) OF WAY INCLUDING DELINEATION AND RECORDING INFORMATION PER HCFCD POLICY, CRITERIA, & PROCEDURE MANUAL (i.e., DRAINAGE EASEMENT, FEE STRIP, ETC.) AND GRANTEE (e.g. COH, HCFCD, PUBLIC, TXDOT, ETC.)

6. REPORTS/AGREEMENTS

I. HCFCD ACCEPTED REPORTS (ALL)

STORMWATER DRAINAGE DESIGN REPORT
REPORT TITLE
HCFCD PROJECT #
ENGINEERING FIRM
REPORT ACCEPTANCE DATE

GEOTECHNICAL INVESTIGATION REPORT
REPORT TITLE
HCFCD PROJECT #
ENGINEERING FIRM
REPORT ACCEPTANCE DATE

HCFCD APPROVED VARIANCE
DESCRIPTION OF VARIANCE
DOCUMENT ID #
VARIANCE ACCEPTANCE DATE

II. AGREEMENT TYPE & No.:

☐ INTERLOCAL (ILA):
☐ HCFCD MAINTENANCE
☐ TURF ESTABLISHMENT
☐ OTHER

HCFCD SIGNATURE BLOCK

PROJECT NAME:
ADDRESS:
WAS ACCEPTED BY HARRIS COUNTY FLOOD CONTROL DISTRICT FOR THE PURPOSES LISTED BELOW:

HARRIS COUNTY FLOOD CONTROL DISTRICT

INTERPOSE NO OBJECTION
BY
FOR ITEMS LOCATED OUTSIDE OF HCFCD RIGHT-OF-WAY
APPROVED:
BY
FOR ITEMS LOCATED WITHIN EXISTING HCFCD RIGHT-OF-WAY
APPROVED:
BY
FOR ITEMS LOCATED WITHIN PROPOSED HCFCD RIGHT-OF-WAY
NO REVIEW REQUIRED:
BY
FINAL PERMITTING BY OTHERS

ADDITIONAL COMMENTS:

THE PROJECT WAS REVIEWED, HOWEVER, THIS DOES NOT MEAN THE ENTIRE PROJECT, INCLUDING ALL SUPPORTING DATA AND CALCULATIONS HAVE BEEN COMPLETELY CHECKED AND VERIFIED. THESE DRAWINGS ARE SIGNED, DATED AND SEALED BY A PROFESSIONAL ENGINEER LICENSED TO PRACTICE IN THE STATE OF TEXAS, WHICH THEREFORE CONVEYS THE ENGINEER'S RESPONSIBILITY AND ACCOUNTABILITY. THIS DOES NOT RELIEVE ANY PARTY FROM COMPLYING WITH APPROPRIATE FEDERAL, STATE AND LOCAL ENVIRONMENTAL RULES, LAWS, AND REGULATIONS AND ANY OTHER LEGALLY ADOPTED REGULATION OR ORDINANCE RELATED TO LAND DEVELOPMENT. IF THE CITY SIGNATURES ARE REQUIRED BY ORDINANCE, COUNTY PERMITS WILL NOT BE ISSUED UNTIL SUCH SIGNATURES ARE OBTAINED. PLAN APPROVAL EXPIRATION TO BE IN ACCORDANCE WITH LOCAL GOVERNEMENT CODE CH. 245.

ENGINEER'S CERTIFICATION

I, Jeremy Austin, A LICENSED PROFESSIONAL ENGINEER IN THE STATE OF TEXAS, DO HEREBY CERTIFY THAT THE INFORMATION PRESENTED ON THIS SHEET IS TRUE AND CORRECT TO THE BEST OF MY KNOWLEDGE AND THAT I AM NOT VIOLATING ANY PROVISION OF THE CURRENT TEXAS ENGINEERING PRACTICE ACT AND RULES CONCERNING THE PRACTICE OF ENGINEERING AND PROFESSIONAL ENGINEERING LICENSURE.

ANY VIOLATIONS WILL BE FORWARDED TO THE HARRIS COUNTY DISTRICT ATTORNEY'S OFFICE FOR PROSECUTION.

THE COMPLETED PROJECT CONSISTS OF DRAWING SHEETS 1 THRU 147.

SIGNATURE DATE

SEAL
This document is released for the purposes of interim review only under the authority of:
Jeremy Austin, P.E.
Texas P.E. No. 116816
09/11/2026
It is not to be used for bidding, construction, or permitting purposes.

REVISIONS

NOTE: REVISION BLOCK IS TO BE USED ONLY FOR CHANGES MADE AFTER PLANS HAVE BEEN APPROVED BY HARRIS COUNTY FLOOD CONTROL.

DATE	SHEET NO.	DESCRIPTION	P.E. INITIAL	H.C.F.C.D APPROVED DATE

HARRIS COUNTY
FLOOD CONTROL DISTRICT
REVIEW SHEET

VERSION 1.0 OCTOBER 2019

G-4

HARRIS COUNTY FLOOD CONTROL PROJECT NO.

SHEET NUMBER 4 OF 147

ABBREVIATIONS:

&	AND
@	AT
AB	ALL BELL
AC	ACRE / ASBESTOS CEMENT
AI/VR	AIR INLET / VACUUM RELIEF
APPROX	APPROXIMATELY
ASPH	ASPHALT
AVE	AVENUE
℄	BASELINE
B/B	BACK TO BACK
BC	BACK OF CURB
BFV	BUTTERFLY VALVE
BL	BUILDING LINE
BLDG	BUILDING
BLVD	BOULEVARD
℄	CENTER LINE
C/C	CENTER TO CENTER
CGMP	CORRUGATED GALVANIZED METAL PIPE
CMP	CORRUGATED METAL PIPE
CIP	CAST IRON PIPE
CLR	CLEARANCE
CO	CLEAN OUT
COH	CITY OF HOUSTON
CONC	CONCRETE
CONSTR	CONSTRUCTION
CPEE	CENTERPOINT ENERGY ELECTRIC
CPEG	CENTERPOINT ENERGY GAS
DIA	DIAMETER
DIP	DUCTILE IRON PIPE
DR	DRIVE
DWG	DRAWING
DWY	DRIVEWAY
E	EAST
EL	ELEVATION
EP	EDGE OF PAVEMENT
E/R	END OF RADIUS
ESMT	EASEMENT
EXST	EXISTING
FC	FACE OF CURB
F/F	FACE TO FACE
FH	FIRE HYDRANT
℄	FLOW LINE
FM	FORCE MAIN
FT	FEET
GPS	GLOBAL POSITIONING SYSTEM
GV	GATE VALVE
GV&B	GATE VALVE AND BOX
HCFCD	HARRIS COUNTY FLOOD CONTROL DISTRICT
HDPE	HIGH-DENSITY POLYETHYLENE
HGL	HYDRAULIC GRADE LINE
HP	HIGH PRESSURE
INV EL	INVERT ELEVATION
IP	INTERMEDIATE PRESSURE
IR	IRON ROD

ABBREVIATIONS:

J-BOX	JUNCTION BOX
JT	JOINT
JUNCT	JUNCTION
LF	LINEAR FEET
LN	LANE
LPT	LOW POINT
LT	LEFT
LS	LIFT STATION
MAX	MAXIMUM
METRO	METROPOLITAN TRANSIT AUTHORITY
MH	MANHOLE
MIN	MINIMUM
MON	MONUMENT
N	NORTH
NA	NOT APPLICABLE
NAVD	NORTH AMERICAN VERTICAL DATUM
NG	NATURAL GROUND
NO	NUMBER
NTS	NOT TO SCALE
OCC	ZERO CURB CUT
OS	OFFSET
OH	OVERHEAD
PC	POINT OF CURVE
PCC	POINT OF COMPOUND CURVATURE
PCCP	PRESTRESSED CONCRETE CYLINDER PIPE
PERM	PERMANENT
PGL	PROFILE GRADE LINE
PI	POINT OF INTERSECTION
PL	PROPERTY LINE
PNT	POINT
PPCA	POTENTIALLY PETROLEUM CONTAMINATED AREA
PRC	POINT OF REVERSE
PROP	PROPOSED
PSI	POUND PER SQUARE INCH
PT	POINT OF TANGENCY
PVC	POLYVINYL CHLORIDE PIPE / POINT OF VERTICAL CURVATURE
PVMT	PAVEMENT
PVI	POINT OF VERTICAL INTERSECTION
PVT	POINT OF VERTICAL TANGENCY

ABBREVIATIONS:

Ⓡ	RECORD DRAWING
R	RADIUS
RCB	REINFORCED CONCRETE BOX
RCP	REINFORCED CONCRETE PIPE
RD	ROAD
REINF	REINFORCED
REM	REMOVABLE
RJ	RESTRAINED JOINT
ROW	RIGHT OF WAY
RR	RAILROAD
RRPM	REFLECTIVE REMOVABLE PAVEMENT MARKERS
RT	RIGHT
S	SOUTH
SAN	SANITARY
SCHED	SCHEDULE
SF	SQUARE FEET
SHT	SHEET
SSE	SANITARY SEWER EASEMENT
ST	STREET
STA	STATION
STD	STANDARD
STL	STEEL
STM	STORM
SWBT	SOUTHWESTERN BELL TELEPHONE
SWR	SEWER
SY	SQUARE YARD
TAN	TANGENT
TBM	TEMPORARY BENCHMARK
TEMP	TEMPORARY
TOB	TOP OF BANK
TOC	TOP OF CURB
TOP	TOP OF PAVEMENT
TOS	TOP OF STACK
TS&V	TAPPING SLEEVE AND VALVE
TXDOT	TEXAS DEPARTMENT OF TRANSPORTATION
TYP	TYPICAL
UE	UTILITY EASEMENT
UGND	UNDERGROUND
VC	VERTICAL CURVE
VPI	VERTICAL POINT OF INTERSECTION
W	WEST
W/	WITH
WL	WATER LINE
WLE	WATER LINE EASEMENT
WM	WATER METER
WP	WOOD POLE
WSEL	WATER SURFACE ELEVATION
WV	WATER VALVE
WWTP	WASTE WATER TREATMENT PLANT

NO.	DATE	REVISION	APP.
	MM/DD/YY	BRIEF DESCRIPTION	XXX
	MM/DD/YY	BRIEF DESCRIPTION	XXX
	MM/DD/YY	BRIEF DESCRIPTION	XXX

TETRA TECH COMPANY
Texas PE Firm Reg. #F-929
575 N. Dairy Ashford, Suite 700,
Houston, Texas 77079
T +1 281 589 7257
E usinfrastructure@rpsgroup.com

SURVEYED BY: KUO Inc.
FB NO. F-4578

This document is released for the purposes of interim review only under the authority of:

Jeremy Austin, P.E.
Texas P.E. No. 116816
09/11/2026

It is not to be used for bidding, construction, or permitting purposes.

CITY OF HOUSTON
HOUSTON PUBLIC WORKS

LIFT STATION REHABILITATION & RECONSTRUCTION

ABBREVIATIONS
G-5

WBS NUMBER	FOR CITY OF HOUSTON USE ONLY
R-000267-178A-3	
DRAWING SCALE	
AS NOTED	
CITY OF HOUSTON PM	
TAHA LOTIA	
SHEET NO. 5 OF 147	

FILE PATH: C:\Users\andres.martinezjr\DC\ACCDocs\Tetra Tech Inc\200-317106-24001 COH LS Rehab Design\Project Files\CAD\R-000267-178A-3_ABBREVIATIONS.dwg PLOTTED: 9/9/2026 4:53 PM

FILE PATH: C:\Users\andres.martinezjr\DC\ACCDocs\Tetra Tech Inc\200-317106-24001 COH LS Rehab Design\Project Files\CAD\R-000267-01078A-3_SYMBOLS.dwg PLOTTED: 9/9/2026 4:53 PM

EXISTING PLAN VIEW

- WATER METER
- WATER VALVE (GATE)
- WATER VALVE (BUTTERFLY)
- FIRE HYDRANT/FLUSHING VALVE
- TAPPING SLEEVE & VALVE
- REDUCER (8" W / 6" W)
- ROUND CONNECTION
- SANITARY SEWER CLEANOUT & MANHOLE (CO, SAN, SAN MH)
- STORM SEWER MANHOLE (STM, STM MH)
- STORM SEWER INLETS ('B' 'B–B' 'C' 'C–1' 'C–2' 'C–2A' 'GRATE')
- CULVERT PIPE AND HEADWALL
- TOP OF CURB ELEVATION
- GUTTER ELEVATION
- TOP OF PAVEMENT ELEVATION
- CONTOUR LINE
- ROW LINE
- PROPERTY LINE
- LOT LINES
- EASEMENT LINE
- CENTER LINE OF ROW
- TRANSIT LINE
- EDGE OF DITCHES
- CENTER LINE OF DITCHES
- EDGE OF DITCHES
- FENCE LINE, WOOD
- FENCE LINE, CHAIN LINK
- FENCE LINE, BARBED WIRE
- FENCE LINE, HOG WIRE
- EDGE OF CONCRETE
- CURB LINE
- CONCRETE WALK
- EDGE OF ASPHALT
- EDGE OF SHELL OR GRAVEL
- DIMENSION LINE (28" 3–17)
- AERIAL POWER LINE
- UNDERGROUND POWER LINE (UGP)
- GAS LINE
- UNKNOWN UNDERGROUND LINE (MISC)
- OIL PIPELINE (IDENTIFY CONDUIT) OGP
- UNDERGROUND TELECOMM LINE W/VAULT (UGT)
- AERIAL TELECOMM LINE
- RAILROAD LINE
- WATER LINE (20" (AND SMALLER) WATER W; 24" (LARGER THAN 20") WATER LDWL)
- SANITARY SEWER LINE (24" (AND SMALLER) SANITARY SEWER SAN; 30" (LARGER THAN 24") SANITARY SEWER SAN)
- STORM SEWER LINE (24" (AND SMALLER) STORM SEWER STM; 30" (LARGER THAN 24") STORM SEWER STM)
- SANITARY SEWER FORCE MAIN (FM)
- RECLAIMED WATER LINE (RWL)
- NON–POTABLE WATER LINE (NPW)
- GAS METER
- GAS VALVE
- PROPANE LINE (PROPANE)
- STEAM LINE (STEAM)
- MISC UNDERGROUND PIPELINE LABLE (A2)

PROPOSED PLAN VIEW

- WATER METER (WM)
- WATER VALVE (GATE) (WV)
- WATER VALVE (BUTTERFLY) (BFWV)
- FIRE HYDRANT/FLUSHING VALVE (FH, WV)
- TAPPING SLEEVE & VALVE (TS&V)
- REDUCER (12" W / 8" W)
- ROUND CONNECTION
- SANITARY SEWER CLEANOUT & MANHOLE (CO, SAN, SAN MH)
- STORM SEWER MANHOLE (STM, STM MH)
- STORM SEWER INLETS ('B' 'B–B' 'C' 'C–1' 'C–2' 'C–2A' 'GRATE')
- CULVERT PIPE AND HEADWALL
- TOP OF CURB ELEVATION (TC=XX.XX)
- GUTTER ELEVATION (G=XX.XX)
- TOP OF PAVEMENT ELEVATION (TP=XX.XX)
- CONTOUR LINE (XX.X')
- ROW LINE
- PROPERTY LINE
- LOT LINES
- EASEMENT LINE
- CENTER LINE OF ROW
- TRANSIT LINE
- EDGE OF DITCHES
- CENTER LINE OF DITCHES
- EDGE OF DITCHES
- FENCE LINE, WOOD
- FENCE LINE, CHAIN LINK
- FENCE LINE, BARBED WIRE
- FENCE LINE, HOG WIRE
- EDGE OF CONCRETE
- CURB LINE
- CONCRETE WALK
- EDGE OF ASPHALT
- EDGE OF SHELL OR GRAVEL
- DIMENSION LINE (28" 3–17)
- AERIAL POWER LINE
- UNDERGROUND POWER LINE (UGP)
- GAS LINE
- UNKNOWN UNDERGROUND LINE (MISC)
- OIL PIPELINE (IDENTIFY CONDUIT) OGP
- UNDERGROUND TELECOMM LINE W/ VAULT (UGT)
- AERIAL TELECOMM LINE
- RAILROAD LINE
- WATER LINE (20" (AND SMALLER) WATER W; 24" (LARGER THAN 20") WATER LDWL)
- SANITARY SEWER LINE (24" (AND SMALLER) SANITARY SEWER SAN; 30" (LARGER THAN 24") SANITARY SEWER SAN)
- STORM SEWER LINE (24" (AND SMALLER) STORM SEWER STM; 30" (LARGER THAN 24") STORM SEWER STM)
- SANITARY SEWER FORCE MAIN (FM)
- RECLAIMED WATER LINE (RWL)
- NON–POTABLE WATER LINE (NPW)
- GAS METER
- GAS VALVE
- PROPANE LINE (PROPANE)
- STEAM LINE (STEAM)
- MISC UNDERGROUND PIPELINE LABLE (A2)
- MATCH LINE

EXISTING PLAN VIEW

- PAVING HEADER
- BUILDING, RESIDENTIAL (RES. 1–STORY BR, BLDG.)
- BUILDING, COMMERCIAL (COMM. 1–STORY BR, BLDG.)
- TREE
- HEDGE
- IRON PIPE OR IRON ROD MONUMENT (3/4" IP)
- POINT OF INTERSECTION (PI)
- POINT OF CURVE (PC)
- POINT OF TANGENCY (PT)
- POWER POLE (P)
- POWER POLE W/DOWN GUY

EXISTING PROFILE VIEW

- NORTH OR EAST PROPERTY LINE
- SOUTH OR WEST PROPERTY LINE
- NORTH OR EAST CURB
- SOUTH OR WEST CURB
- NORTH OR EAST DITCH
- SOUTH OR WEST DITCH
- NORTH OR EAST NATURAL GROUND
- SOUTH OR WEST NATURAL GROUND
- NORTH OR EAST CULVERT (CULVERT)
- SOUTH OR WEST CULVERT (CULVERT)
- CENTERLINE OF ROW
- CENTERPOINT ENERGY CONDUIT (UGP CENTERPOINT ENERGY CONDUIT UGP)
- GAS LINE (GAS GAS LINE GAS)
- WESTERN UNION (OGP WESTERN UNION OGP)
- AT&T CONDUIT (UGT AT&T CONDUIT UGT)
- WATER LINE (W 20" (AND SMALLER) WATER W; W 24" (LARGER THAN 20") WATER W)
- SANITARY SEWER LINE (SAN 24" (AND SMALLER) SANITARY SEWER SAN; SAN 30" (LARGER THAN 24") SANITARY SEWER SAN)
- STORM SEWER LINE (STM 24" (AND SMALLER) STORM SEWER STM; STM 30" (LARGER THAN 24") STORM SEWER STM)
- SANITARY SEWER FORCE MAIN (FM FM)
- RECLAIMED WATER LINE (RWL RWL)
- NON–POTABLE WATER LINE (NPW NPW)
- CENTERPOINT ENERGY MANHOLE
- AT&T MANHOLE
- WATER LINE MANHOLE (W W)
- SANITARY SEWER MANHOLE & CLEANOUT
- STORM SEWER MANHOLE
- STORM SEWER INLET

PROPOSED PLAN VIEW

- PAVING HEADER
- BUILDING, RESIDENTIAL (RES. 1–STORY BR, BLDG.)
- BUILDING, COMMERCIAL (COMM. 1–STORY BR, BLDG.)
- CASING PIPE
- TREE
- HEDGE
- IRON PIPE OR IRON ROD MONUMENT (3/4" IP)
- POINT OF INTERSECTION (PI)
- POINT OF CURVE (PC)
- POINT OF TANGENCY (PT)
- POWER POLE (P)
- POWER POLE W/DOWN GUY

PROPOSED PROFILE VIEW

- NORTH OR EAST PROPERTY LINE
- SOUTH OR WEST PROPERTY LINE
- NORTH OR EAST CURB
- SOUTH OR WEST CURB
- NORTH OR EAST DITCH
- SOUTH OR WEST DITCH
- NORTH OR EAST NATURAL GROUND
- SOUTH OR WEST NATURAL GROUND
- NORTH OR EAST CULVERT (CULVERT)
- SOUTH OR WEST CULVERT (CULVERT)
- CASING PIPE
- CENTERLINE OF ROW
- CENTERPOINT ENERGY CONDUIT (UGP CENTERPOINT ENERGY CONDUIT UGP)
- GAS LINE (GAS GAS LINE GAS)
- WESTERN UNION (OGP WESTERN UNION OGP)
- AT&T CONDUIT (UGT AT&T CONDUIT UGT)
- WATER LINE (W 20" (AND SMALLER) WATER W; W 24" (LARGER THAN 20") WATER W)
- SANITARY SEWER LINE (SAN 24" (AND SMALLER) SANITARY SEWER SAN; SAN 30" (LARGER THAN 24") SANITARY SEWER SAN)
- STORM SEWER LINE (STM 24" (AND SMALLER) STORM SEWER STM; STM 30" (LARGER THAN 24") STORM SEWER STM)
- SANITARY SEWER FORCE MAIN (FM FM)
- RECLAIMED WATER LINE (RWL RWL)
- NON–POTABLE WATER LINE (NPW NPW)
- CENTERPOINT ENERGY MANHOLE
- AT&T MANHOLE
- WATER LINE MANHOLE (W W)
- SANITARY SEWER MANHOLE & CLEANOUT
- STORM SEWER MANHOLE
- STORM SEWER INLET

MISC STANDARD ELEMENTS

- COH NORTH ARROW (N)
- COH BAR SCALE (0' 10' 20' 40'; SCALE: 1"=20')
- REVISION CLOUDE/DELTA (1)
- DETAIL/SECTION TITLE (1 VIEW TITLE; SCALE: 1:1)
- SECTION CALLOUT (1 / XX)
- DETAIL CALLOUT (1 / XX)
- SOIL BORING
- CONTROL POINT

RPS — A TETRA TECH COMPANY
Texas PE Firm Reg. #F-929
575 N. Dairy Ashford, Suite 700, Houston, Texas 77079
T +1 281 589 7257
E usinfrastructure@rpsgroup.com

SURVEYED BY: KUO Inc.
FB NO. F–4578

This document is released for the purposes of interim review only under the authority of:

Jeremy Austin, P.E.
Texas P.E. No. 116816
09/11/2026

It is not to be used for bidding, construction, or permitting purposes.

CITY OF HOUSTON
HOUSTON PUBLIC WORKS

LIFT STATION REHABILITATION & RECONSTRUCTION

SYMBOLS
G–6

WBS NUMBER	FOR CITY OF HOUSTON USE ONLY
R–000267–178A–3	
DRAWING SCALE	
AS NOTED	
CITY OF HOUSTON PM	
TAHA LOTIA	
SHEET NO. 6 OF 147	

GENERAL CONSTRUCTION NOTES

1. UNLESS OTHERWISE NOTED AND APPROVED ON DRAWINGS, CONSTRUCT CIVIL INFRASTRUCTURE IN ACCORDANCE WITH THE EFFECTIVE EDITION OF THE HOUSTON PUBLIC WORKS STANDARD CONSTRUCTION SPECIFICATIONS, STANDARD CONSTRUCTION DETAILS AND SUPPLEMENTS, ADDENDA, AND AMENDMENTS THERETO. THE LATEST EDITION OF THE ABOVE PUBLICATIONS CAN BE FOUND AT: HTTPS: WWW.HOUSTONPERMITTINGCENTER.ORG/OFFICE–CITY–ENGINEER/ DESIGN–AND–CONSTRUCTION–STANDARDS.
2. THE DESIGN MUST BE CONSISTENT WITH THE EFFECTIVE EDITION OF HOUSTON PUBLIC WORKS INFRASTRUCTURE DESIGN MANUAL AND TCEQ (TEXAS COMMISSION ON ENVIRONMENTAL QUALITY) REQUIREMENTS.
3. UTILITIES PRESENTED ON THESE DRAWINGS ARE SHOWN BASED ON THE BEST AVAILABLE INFORMATION. CONTRACTOR SHALL VERIFY THE EXACT LOCATIONS IN THE FIELD PRIOR TO COMMENCING CONSTRUCTION. CONTRACTOR SHALL NOTIFY TEXAS ONE CALL AT 713–223–4567/811 OR 800–344–8377 AND LONE STAR NOTIFICATION CENTER AT 800–669–8344 AT LEAST 48 HOURS BEFORE PROCEEDING WITH ANY EXCAVATION. UTILITIES MARKED WITHIN PUBLIC RIGHT OF WAY OR IN EASEMENTS SHALL COMPLY WITH TAC TITLE 16, PART 1, CHAPTER 18, RULE § 18.6 AND THE AMERICAN PUBLIC WORKS ADMINISTRATION (APWA) UNIFORM COLOR CODE.
4. CONTRACTOR SHALL BE RESPONSIBLE FOR DAMAGES TO EXISTING WATER, WASTEWATER STORM DRAINAGE LINES, AND TRAFFIC CONTROL DEVICES. DAMAGES SHALL BE REPAIRED IN ACCORDANCE WITH THE EFFECTIVE EDITION OF HOUSTON PUBLIC WORKS STANDARD CONSTRUCTION SPECIFICATIONS FOR WASTEWATER COLLECTION SYSTEMS, WATER LINES, STORM DRAINAGE, STREET PAVING, AND TRAFFIC AND STANDARD CONSTRUCTION DETAILS FOR WASTEWATER COLLECTION SYSTEMS, WATER LINES, STORM DRAINAGE, STREET PAVING, AND TRAFFIC, REFERENCED ABOVE, AND SUPPLEMENTS, ADDENDA, AND AMENDMENTS THERETO, AT NO ADDITIONAL COST TO THE OWNING AUTHORITY.
5. CONTRACTOR SHALL NOTIFY THE OFFICE OF THE CITY ENGINEER, HOUSTON PUBLIC WORKS IN WRITING PRIOR TO COMMENCING CONSTRUCTION.
6. ADEQUATE DRAINAGE SHALL BE MAINTAINED AT ALL TIMES DURING CONSTRUCTION AND ANY DRAINAGE DITCH OR STRUCTURE DISTURBED DURING CONSTRUCTION SHALL BE RESTORED TO EXISTING CONDITIONS OR BETTER AND TO THE SATISFACTION OF THE OWNING AUTHORITY.
7. CONTRACTOR SHALL COMPLY WITH LATEST EDITION OF OSHA REGULATIONS AND THE STATE OF TEXAS LAWS CONCERNING EXCAVATION.
8. CONTRACTOR SHALL TAKE NECESSARY PRECAUTIONS TO PROTECT ROOT SYSTEMS OF SHRUBS, PLANTS AND TREES ALONG THE AREA OF EXCAVATION.
9. CONTRACTOR SHALL MAINTAIN A SET OF REDLINE DRAWINGS AND RECORD AS–BUILT CONDITIONS DURING CONSTRUCTION. THESE AS–BUILT DRAWINGS WILL BE SUBMITTED TO THE DESIGN CONSULTANT WHO WILL MAKE THE CHANGES ON THE ORIGINAL TRACINGS, LABEL EACH SHEET IN THE SET AS "RECORD DRAWINGS", AND RETURN IT TO THE OFFICE OF THE CITY ENGINEER.
10. THE CONTRACTOR SHALL CONFINE ALL CONSTRUCTION ACTIVITIES STRICTLY WITHIN THE LIMITS OF THE CONSTRUCTION EASEMENT, SITE BOUNDARIES AND PUBLIC ROW.
11. THE TEMPORARY CONSTRUCTION EASEMENT LOCATED IN FRONT OF THE BUSINESS SHALL BE USED FOR TEMPORARY MATERIAL AND EQUIPMENT STORAGE DURING ACTIVE CONSTRUCTION ON THE ADJACENT SECTION OF THE WATER LINE (WL).
12. THE CONTRACTOR SHALL ALWAYS MAINTAIN CONTINUOUS AND UNOBSTRUCTED ACCESS TO ALL BUSINESSES WITHIN THE AFFECTED AREA.
13. THE CONTRACTOR WILL WORK MONDAY THROUGH FRIDAY FROM 7:00 AM TO 7:00 PM. CONTRACTOR MUST OBTAIN WRITTEN PERMISSION FROM THE CITY PM TO WORK ON SATURDAY, SUNDAY AND CITY HOLIDAYS IN 48 HOUR ADVANCE. CONTRACTOR SHALL OBTAIN WRITTEN PERMISSION TO WORK 24–HOURS PER DAY, SEVEN DAYS PER WEEK.

STORM SEWER CONSTRUCTION NOTES

1. STORM SEWER SHALL BE REINFORCED CONCRETE PIPE (C–76, CLASS III), AND SHALL BE INSTALLED, BEDDED, AND BACKFILLED IN ACCORDANCE WITH THE CITY OF HOUSTON DRAWING NOS. 02317–02, 02317–03, 02317–05, 02317–06, AND 02317–07 (OCT. 2002) AS APPLICABLE UNLESS OTHERWISE SHOWN ON THE DRAWINGS.
2. ALL STORM SEWER CONSTRUCTED IN SIDELOT EASEMENT SHALL BE R.C.P. (C–76, CLASS III) AND SHALL BE EMBEDDED IN ACCORDANCE WITH THE CITY OF HOUSTON DRAWING NOS. 02317–02, 02317–03, 02317–05, 02317–06, AND 02317–07 AS APPLICABLE.
3. ALL SEWER UNDER PROPOSED OR FUTURE PAVEMENT AND TO A POINT ONE (1) FOOT BACK OF ALL PROPOSED OR FUTURE CURBS SHALL BE BACKFILLED WITH 1–1/2 SACK CEMENT/C.Y. STABILIZED SAND TO WITHIN ONE (1) FOOT OF SUBGRADE. THE REMAINING DEPTH OF TRENCH SHALL BE BACKFILLED WITH SUITABLE EARTH MATERIAL.
4. ALL TRENCH BACKFILL SHALL BE IN 8" LIFTS, WITH TESTS TAKEN AT 100 FOOT INTERVALS IN EACH LIFT, AND MECHANICALLY COMPACTED TO A DENSITY OF NOT LESS THAN 95% OF THE MAXIMUM DRY DENSITY AS DETERMINED BY THE STANDARD PROCTOR COMACTION TEST (ASTM D–698/AASHTO T99).
5. CIRCULAR AND ELLIPTICAL REINFORCED CONCRETE PIPE SHALL BE INSTALLED USING RUBBER GASKET JOINT CONFORMING TO ASTM C443 AND ASTM C877 RESPECTIVELY.
6. MINIMUM HORIZONTAL CLEARANCE BETWEEN ANY STORM PIPE AND BOX SHALL BE AT LEAST 48–INCHES FROM EXTERIOR OF THE STORM PIPE OR BOX TO THE EXTERIOR OF THE EXISTING OR PROPOSED PUBLIC OR PRIVATE UTILITY AND OTHER APPURTENANCES. MINIMUM VERTICAL CLEARANCE BETWEEN ANY STORM PIPE AND BOX SHALL BE AT LEAST 18–INCHES FROM EXTERIOR OF THE STORM PIPE OR BOX TO THE EXTERIOR OF THE EXISTING OR PROPOSED PUBLIC OR PRIVATE UTILITY AND OTHER APPURTENANCES.
7. ADJUST MANHOLE COVERS TO GRADE CONFORMING TO REQUIREMENTS OF SECTION 02086–ADJUSTING MANHOLES, INLETS, AND VALVE BOXES TO GRADE.
8. THE CONTRACTOR SHALL BE RESPONSIBLE FOR PROTECTING, MAINTAINING, AND RESTORING ANY BACK SLOPE DRAINAGE SYSTEM DISTURBED AS A RESULT OF THIS WORK.
9. ALL DITCHES SHALL BE GRADED TO PROPOSED ELEVATIONS TO INSURE PROPER DRAINAGE. ALL OUTFALLS SHALL BE PROPERLY BACKFILLED AND COMPACTED. ALL DISTURBED AREA SHALL BE REGRADED, SEEDED, AND FERTILIZED.
10. ALL DRIVEWAYS WILL BE LOCATED TO AVOID EXISTING CURB INLET STRUCTURES.

WATER LINE CONSTRUCTION NOTES

1. WATER LINES SHALL BE CONSTRUCTED IN ACCORDANCE WITH THE LATEST CITY OF HOUSTON INFRASTRUCTURE DESIGN MANUAL, STANDARD SPECIFICATION, AND CONSTRUCTION DETAILS.
2. ALL 4" THROUGH 12" WATER LINE TO BE AWWA C–900 PVC DR–18 BLUE PRESSURE RATED WATER MAIN WITH 2" AND SMALLER WATER SERVICE LINE TO BE CONTINUOUS TYPE K COPPER TUBING PER COH STANDARD SPECIFICATION SECTION 02503. ALL 4" THRU 54" DI PIPE WATER LINES SHALL BE AWWA C151 WITH INSIDE LINING WITH AWWA C104 AND DOUBLE WRAPPED WITH 8–MIL POLYETHYLENE SHEETS.
3. CONCRETE THRUST BLOCKS SHALL BE PROVIDED AS NECESSARY TO PREVENT PIPE MOVEMENT. USE RESTRAINED JOINTS WHERE PREVENTING MOVEMENT OF 16" OR GREATER PIPE IS NECESSARY DUE TO THRUST.
4. ALL WATER LINES UNDER PROPOSED OR FUTURE PAVING AND TO A POINT OF ONE (1) FOOT BACK OF ALL PROPOSED OR FUTURE CURBS SHALL BE ENCASED IN BANK SAND TO 12" OVER PIPE AND BACKFILLED WITH CEMENT STABILIZED SAND TO WITHIN ONE (1) FOOT OF SUBGRADE.
5. ALL WATER LINE AND SEWER LINE CROSSINGS SHALL BE CONSTRUCTED PER CITY OF HOUSTON AND TCEQ REGULATIONS.
6. ALL WATER VALVES SHALL BE SUPPLIED AND INSTALLED IN ACCORDANCE WITH THE LATEST EDITION OF AWWA C–500 AND SHALL BE OF THE RESILIENT SEAT TYPE.
7. ALL WATER LINES TO BE DISINFECTED IN CONFORMANCE WITH AWWA C–651 AND THE TEXAS STATE DEPARTMENT OF HEALTH. AT LEAST ONE BACTERIOLOGICAL SAMPLE SHALL BE COLLECTED FOR EVERY 1,000 LINEAR FEET OF WATER LINE AND SHALL BE REPEATED IF CONTAMINATION PERSISTS.
8. ALL BELOW GRADE VALVES SHALL BE GASKETED, HUB–END GATE VALVES WITH A CAST IRON BOX, EXCEPT WHERE FLANGES ARE CALLED OUT ON THE PLANS.
9. 4" THRU 12" FITTINGS SHALL BE CEMENT MORTAR LINED COMPACT DUCTILE IRON PRESSURE FITTINGS PER ANSI A21.53, OR PUSH–ON FITTINGS PER ANSI A21.10 PRESSURE RATED AT 250 PSIG.
10. HYDROSTATIC TESTING: ALL WATER PIPES SHALL BE TESTED FOR LEAKAGE IN ACCORDANCE WITH THE LATEST CITY OF HOUSTON STANDARD CONSTRUCTION SPECIFICATIONS. TESTS ARE TO BE PERFORMED ON THE ENTIRE FOOTAGE OF WATER PIPE LINE INCLUDED IN THE PROJECT.
11. ALL WATER LINES TO HAVE 4' MINIMUM COVER TO FINISHED GRADE AND MINIMUM 12" CLEARANCE TO OTHER UTILITIES AT CROSSING UNLESS OTHERWISE NOTED ON PLANS. ALL WATER LINE INSTALLED OVER 8' DEEP SHALL UTILIZE RESTRAINED JOINT FITTINGS.
12. CONTRACTOR SHALL KEEP WATER PIPE CLEAN AND CAPPED (OR OTHERWISE EFFECTIVELY COVERED) OPEN PIPE ENDS TO EXCLUDE INSECTS, ANIMALS OR OTHER SOURCES OF CONTAMINATION FROM UNFINISHED PIPE LINES AT TIMES WHEN CONSTRUCTION IS NOT IN PROGRESS.
13. PLACE 1 FULL SECTION (MIN 18 FT) OF SANITARY SEWER CENTERED AT WATER LINE CROSSING. PROVIDE RESTRAINED JOINTS ON SANITARY SEWER, SPACED AT LEAST 9 FT HORIZONTALLY FROM CENTERLINE OF WATERLINE.
14. REPLACE ONE FULL SECTION OF EXISTING SANITARY SEWER WITH PRESSURE–RATED DUCTILE IRON PIPE. EMBED SANITARY SEWER WITH CEMENT STABILIZED SAND FOR THE TOTAL LENGTH OF ONE PIPE SEGMENT PLUS ONE FOOT BEYOND THE JOINT ON EACH END.
15. WATER LINE TO BE DUCTILE IRON PIPE AT SANITARY SEWER CROSSING.

GRADING NOTES

1. GENERAL CONTRACTOR AND ALL SUBCONTRACTORS SHALL VERIFY THE SUITABILITY OF ALL EXISTING AND PROPOSED SITE CONDITIONS INCLUDING GRADES AND DIMENSIONS BEFORE STARTING CONSTRUCTION. THE ENGINEER SHALL BE NOTIFIED IMMEDIATELY OF ANY DISCREPANCIES.
2. BEFORE STARTING CONSTRUCTION, CONTRACTOR SHALL VERIFY BENCHMARK ELEVATION AND NOTIFY ENGINEER IF ANY DISCREPANCY AND/OR CONFLICT IS FOUND.
3. CONTRACTOR SHALL ENSURE THERE IS POSITIVE DRAINAGE FROM THE PROPOSED BUILDINGS AND NO PONDING IN PAVED AREAS, AND SHALL NOTIFY ENGINEER IF ANY GRADING DISCREPANCIES ARE FOUND IN THE EXISTING AND PROPOSED GRADES PRIOR TO PLACEMENT OF PAVEMENT OR UTILITIES.
4. CONTRACTOR SHALL PROTECT ALL MANHOLE COVERS, VALVE COVERS, VAULT LIDS, FIRE HYDRANTS, POWER POLES, GUY WIRES, AND TELEPHONE BOXES THAT ARE TO REMAIN IN PLACE AND UNDISTURBED DURING CONSTRUCTION.
5. ALL EXISTING CONCRETE PAVING, SIDEWALK, AND CURB DEMOLITION SHALL BE REMOVED AND DISPOSED OF BY CONTRACTOR. DISPOSAL SHALL BE AT AN APPROVED OFF–SITE, LAWFUL LOCATION, UNLESS DIRECTED OTHERWISE BY THE OWNER.

SWPPP CONSTRUCTION NOTES

1. CONTRACTOR SHALL IMPLEMENT INLET PROTECTION DEVICES AND REINFORCED FILTER FABRIC BARRIER ALONG ROAD AND SIDE DITCHES AT LOCATIONS SHOWN ON THE TYPICAL STORM WATER POLLUTION PREVENTION PLANS (SWPPP) TO KEEP SILT AND OR EXCAVATED MATERIALS FROM ENTERING INTO THE STORM WATER INLETS AND DITCHES EVENTUALLY POLLUTING THE RECEIVING STORM.
2. DURING THE EXCAVATION PHASE OF THE PROJECT, CONTRACTOR SHALL SCHEDULE THE WORK IN SHORT SEGMENTS SO THAT EXCAVATION MATERIAL CAN BE QUICKLY HAULED AWAY FROM THE SITE AND TO PREVENT IT FROM STAYING UNCOLLECTED ON THE EXISTING PAVEMENT. ANY LOOSE EXCAVATED MATERIAL WHICH FALLS ON PAVEMENTS OR DRIVEWAYS SHALL BE SWEPT BACK INTO THE EXCAVATED AREA.
4. CONTRACTOR TO INSPECT AND MAINTAIN THE AREAS LISTED BELOW AT LEAST ONCE EVERY FOURTEEN (14) CALENDAR DAYS AND WITHIN 24 HOURS OF THE END OF A STORM EVENT OF 0.5 INCHES OR GREATER.
   - DISTURBED AREAS OF THE CONSTRUCTION SITE THAT HAVE NOT BEEN FINALLY STABILIZED.
   - AREAS USED FOR STORAGE OF MATERIALS THAT ARE EXPOSED TO PRECIPITATION.
   - STRUCTURAL CONTROL MEASURES.
   - LOCATIONS WHERE VEHICLES ENTER OR EXIT THE SITE.
5. CONTRACTOR TO BE RESPONSIBLE TO MAINTAIN EXISTING DITCHES AND/OR CULVERTS FOR UNOBSTRUCTED DRAINAGE AT ALL TIMES. WHERE SODDING IS DISTURBED BY EXCAVATION ON BACKFILLING OPERATIONS, SUCH AREAS SHALL BE REPLACED BY SEEDING OR SODDING. SLOPES 4:1 OR STEEPER SHALL BE REPLACED BY BLOCK SODDING.
6. CONTRACTOR SHALL REMOVE AND/OR REPLACE INLET PROTECTION BARRIER BEFORE AND AFTER A SEVERE WEATHER EVENT AT THE REQUEST OF THE CITY OF HOUSTON.
7. CONTRACTOR SHALL REMOVE AND REPLACE INLET PROTECTION BARRIER PER REQUEST BY THE CITY RELATED TO SEVERE WEATHER EVENTS.

STANDARD HCFCD NOTES FOR CONSTRUCTION DRAWINGS

1. OBTAIN AND COMPLY WITH ALL APPLICABLE CITY, COUNTY, STATE, AND FEDERAL PERMITS AND APPROVALS, WITH ASSISTANCE FROM ENGINEER, IF NECESSARY. OBTAIN PERMIT (CERTIFICATION) FROM HARRIS COUNTY ENGINEER TO ENTER HARRIS COUNTY FLOOD CONTROL DISTRICT RIGHT–OF–WAY.
2. NOTIFY THE HARRIS COUNTY FLOOD CONTROL DISTRICT'S PROPERTY MANAGEMENT DEPARTMENT IN WRITING AT LEAST 48 HOURS PRIOR TO CONSTRUCTION. SUBMIT THE HCFCD 48 HOUR PRE–CONSTRUCTION NOTIFICATION FORM, A COPY OF THE APPROVED CONSTRUCTION DRAWINGS, AND A COPY OF THE CORPS OF ENGINEERS INDIVIDUAL SECTION 404 PERMIT OR COMPLIANCE WITH NATIONWIDE PERMIT, IF APPLICABLE, TO HCFCD, 9900 NORTHWEST FREEWAY, HOUSTON, TEXAS 77092, ATTN: DEVELOPMENT COORDINATION AND INSPECTION DEPT. BY HAND DELIVERY, BY EMAIL DCID@HCFCD.ORG, OR FAX TO 713–684–4129 (FAX NUMBER).
3. ENGINEER SHALL SUBMIT CERTIFICATION LETTER AND RECORD DRAWINGS TO THE HARRIS COUNTY FLOOD CONTROL DISTRICT'S DEVELOPMENT COORDINATION AND INSPECTION SECTION REQUESTING INSPECTION OF ITEMS CONSTRUCTED IN HARRIS COUNTY FLOOD CONTROL DISTRICT RIGHT–OF–WAY. PRIOR TO REQUESTING INSPECTION, THE DRAINAGE RIGHT–OF–WAY AND/OR EASEMENTS SHALL BE STAKED AND FLAGGED.
4. PROTECT, MAINTAIN, AND RESTORE EXISTING BACKSLOPE DRAINAGE SYSTEMS.
5. BACKSLOPE SWALE AND INTERCEPTOR STRUCTURE ELEVATIONS AND LOCATIONS SHOWN ON PLANS ARE APPROXIMATE. FINAL ELEVATIONS AND LOCATIONS SHALL BE FIELD VERIFIED BY THE ENGINEER PRIOR TO INSTALLATION.
6. ESTABLISH TURF GRASS ON ALL DISTURBED AREAS WITHIN THE CHANNEL OR DETENTION RIGHT–OF–WAY, EXCEPT THE CHANNEL BOTTOM AND WHERE STRUCTURAL EROSION MEASURES ARE USED. MINIMUM ACCEPTANCE CRITERIA ARE 75% COVERAGE OF LIVE BERMUDA GRASS AND NO EROSION OR RILLS DEEPER THAN 4".
7. PERFORM ALL ACTIVITIES WITHIN HARRIS COUNTY FLOOD CONTROL DISTRICT RIGHT–OF–WAY IN ACCORDANCE WITH THE MOST RECENT HARRIS COUNTY FLOOD CONTROL DISTRICT STANDARD SPECIFICATIONS BOOK.
8. EXCAVATE CHANNEL FLOWLINE TO DESIGN ELEVATION AS SHOWN ON PLANS AND DOWNSTREAM, AS NECESSARY, TO ENSURE NO WATER REMAINS IN THE FACILITY (STORM SEWER, LATERAL CHANNEL, OR DRY BOTTOM DETENTION BASIN) DURING NORMAL WATER SURFACE CONDITIONS IN THE CHANNEL, SO THE FACILITY WILL FUNCTION AS INTENDED. FOR WET BOTTOM DETENTION BASINS, ENSURE NO WATER IS ABOVE THE DESIGN LEVEL IN THE WET BOTTOM DURING NORMAL WATER SURFACE CONDITIONS IN THE CHANNEL.
9. MAINTAIN FLOW IN CHANNEL DURING CONSTRUCTION AND RESTORE CHANNEL TO ORIGINAL CONDITION.
10. REMOVE ALL EXCAVATED MATERIAL FROM THE HARRIS COUNTY FLOOD CONTROL DISTRICT OR DRAINAGE RIGHT–OF–WAY. NO FILL IS TO BE PLACED WITHIN A DESIGNATED FLOOD PLAIN AREA WITHOUT FIRST OBTAINING A FILL PERMIT FROM THE APPROPRIATE JURISDICTIONAL AUTHORITY.

CONTRACTOR WORK ZONE NOTES

1. DRIVEWAY ACCESS WILL BE MAINTAINED OPEN AFTER WORKING HOURS. A MINIMUM OF ONE DRIVEWAY ACCESS WILL BE MAINTAINED OPEN AT ALL TIMES TO COMMERCIAL, APARTMENTS, AND/OR NON–RESIDENTIAL DEVELOPMENTS.
2. THE LENGTH OF THE WORK ZONE MUST BE MINIMIZED WITHIN THE HARRIS COUNTY ROW OR EASEMENTS. THERE SHALL NOT BE MORE THAN 200–FEET OF TRENCH OPEN AT ANY ONE TIME. THE CONSTRUCTION ZONE WILL BE A ROLLING CONSTRUCTION ZONE WITH APPROPRIATE TRANSITIONS ON EACH END UNLESS OTHERWISE SHOWN IN PLANS AND SPECIFICATIONS.
3. SIGNALIZED INTERSECTIONS: LANES WILL NOT BE CLOSED AT A SIGNALIZED INTERSECTION, UNLESS APPROVED BY THE COUNTY ENGINEER AND SHOWN IN THE PLANS AND SPECIFICATIONS.
4. TEMPORARY PAVEMENT MARKERS: TEMPORARY EPOXY–GLUED BOTTONS OR "CONSTRUCTION GRADE" TAPE PAVEMENT MARKERS SHOULD BE USED ON PERMANENT PAVEMENT TO ELIMINATE GRINDING AND SCARRING OF THE SURFACE.
5. PEDESTRIAN TRAFFIC: CARE SHALL BE TAKEN TO PROVIDE FOR TEMPORARY PEDESTRIAN TRAFFIC AND CROSSING AT AREAS SUCH AS SCHOOLS, PARKS, AND SHOPPING AREAS.

SANITARY SEWERS CONSTRUCTION NOTES

1. ALL SEWERS SHALL BE SUBJECT TO A STANDARD EXFILTRATION TEST. TESTS ARE TO BE PERFORMED ON THE TOTAL FOOTAGE OF SEWER LINE INCLUDED IN THE PROJECT. REQUIREMENTS OF TEXAS ADMINISTRATIVE CODE, TITLE 30 CHAPTER 217, "DESIGN CRITERIA FOR DOMESTIC WASTEWATER SYSTEMS" SHALL GOVERN WHERE CONFLICTS EXIST EXCEPT WHERE CITY REQUIREMENTS ARE MORE STRINGENT.
2. ALL MANHOLES ARE TO BE PER CITY OF HOUSTON STANDARD DETAILS DRAWING NUMBERS 02082–01, 02082–02, 02082N–02, 02082–03, AND 02082N–03 UNLESS OTHERWISE NOTED. USE THE LATEST VERSION AS APPLICABLE.
3. SANITARY SEWER MANHOLES WILL HAVE BEDDING AND BACKFILL PER CITY OF HOUSTON STANDARD DETAILS DRAWING NO. 02317–08 UNLESS OTHERWISE NOTED.
4. THE SANITARY SEWER PVC PIPE SHALL BE ASTM D 3034 TYPE PSM SDR 26 GRAVITY SEWER PIPE, ASTM D2241 SDR 26 PRESSURE RATED SEWER PIPE OR AWWA C–900 DR–18 GREEN PVC PRESSURE RATED SEWER PIPE BASED ON CONSTRUCTION CONDITION REQUIREMENT AND CONFORMING TO ASTM D1784 AND CITY OF HOUSTON STANDARD SPECIFICATION SECTION 02506 POLYVINYL CHLORIDE PIPE.
5. WHEN SS PRESSURE RATED PVC PIPE IS USED ON WATERLINE (WL) CROSSING UNDER CONDITION 1 OF COH IDM TABLE 7.3, THE SAME TYPE OF D2241 SDR 26 PVC PIPE OR C–900 GREEN DR–18 PVC GREEN PRESSURED TO BE UTILIZING IN–BETWEEN TWO SS MHS. OR TO UTILIZE A DI TRANSITION ADAPTER FOR THE CONNECTING OF ASTM D–3034 PVC GRAVITY PIPE TO DI–OD AWWA C–900 PVC PIPE CENTERED AT WL WHEN CONNECTING TWO DIFFERENT TYPES OF PVC PIPES FOR SEWER CONSTRUCTION.
6. AWWA C–900 DR–18 PVC PIPE USES EITHER AWWA C900 DR–18 PVC FITTINGS OR DIP FITTINGS.
7. ALL SANITARY SEWER LINES UNDER PROPOSED OR FUTURE PAVEMENT AND TO A POINT ONE (1) FOOT BACK OF ALL PROPOSED OR FUTURE CURBS SHALL HAVE BEDDING PER CITY OF HOUSTON STANDARD DETAILS DRAWING NUMBERS 02317–01, 02317–02, OR 02317–03 AS APPLICABLE, WITH 1 ½ SACK CEMENT/CY STABILIZED SAND BACKFILL UP TO THE BOTTOM OF THE PAVEMENT SUBGRADE. 100 PSI PERFORMANCE RESULTS ARE STILL REQUIRED.
8. ALL NEW SANITARY SEWERS CROSSING WATER LINES WITH A CLEARANCE BETWEEN 12 INCHES AND 9 FEET SHALL HAVE A MINIMUM OF ONE 18'JOINT OF DUCTILE IRON OR (GREEN) C900 PVC PIPE MEETING ASTM SPECIFICATION D2241 CENTERED ON WATER LINE. WHEN WATER LINE IS BELOW SANITARY SEWER, PROVIDE MINIMUM 2 FOOT SEPARATION.
9. CONTRACTOR SHALL PROVIDE A MINIMUM HORIZONTAL CLEARANCE OF 9 FEET BETWEEN WATER LINES AND SANITARY SEWER MANHOLES AND LINES.
10. SANITARY SEWER MANHOLE RIMS OUTSIDE OF PROPOSED PAVING WILL BE SET 3"– 6" ABOVE THE SURROUNDING LEVEL FINISHED GRADE AFTER PAVING WITH SLOPED BACKFILL ADDED FOR STORM WATER TO DRAIN AWAY FROM MANHOLE RIM.
11. IN WET STABLE TRENCH AREAS USE BEDDING PER CITY OF HOUSTON STANDARD DETAILS DRAWING NUMBER 02317–02.
12. DEFLECTION TEST: DEFLECTION TESTS SHALL BE PERFORMED ON ALL FLEXIBLE AND SEMI–RIGID SEWER PIPE. THE TEST SHALL BE CONDUCTED AFTER THE FINAL BACKFILL HAS BEEN IN PLACE AT LEAST 30 DAYS. NO PIPE SHALL EXCEED A DEFLECTION OF 5% IF THE DEFLECTION TEST IS TO BE RUN USING A RIGID MANDREL, IT SHALL HAVE A DIAMETER EQUAL TO 95% OF THE INSIDE DIAMETER OF THE PIPE. THE TEST SHALL BE PERFORMED AS PER 30 TAC 217.57 LATEST AMENDMENT AND WITHOUT MECHANICAL PULLING DEVICES. NO BALL–TYPE MANDREL IS ALLOWED.
13. INFILTRATION, EXFILTRATION OR LOW–PRESSURE AIR TEST: EITHER OF THE FOLLOWING TESTS SHALL BE PERFORMED AS PER TAC, TITLE 30 217.57 WITHIN THE SPECIFIED TOLERANCES ON ALL GRAVITY SEWERS.

A. INFILTRATION OR EXFILTRATION TEST: TOTAL LEAKAGE AS DETERMINED BY A HYDROSTATIC HEAD TEST SHALL NOT EXCEED 50 GALLONS PER INCH DIAMETER PER MILE OF PIPE PER 24 HOURS AT A MINIMUM TEST HEAD OF TWO (2) FEET.

B. LOW–PRESSURE AIR TEST: PERFORM TEST ACCORDING TO UNI–B–6–90 OR OTHER APPROPRIATE PROCEDURES. FOR SECTIONS OF PIPE LESS THAN 36"(INCH) AVERAGE INSIDE DIAMETER, THE MINIMUM ALLOWABLE TIME FOR PRESSURE DROP FROM 3.5 P.S.I.G. TO 2.5 P.S.I.G. SHALL BE AS FOLLOWS:

6"340 SECONDS OR 0.855(L) FOR TEST LENGTHS GREATER THAN 398'
8"454 SECONDS OR 1.520(L) FOR TEST LENGTHS GREATER THAN 298'
10"567 SECONDS OR 2.374(L) FOR TEST LENGTHS GREATER THAN 239'
12"680 SECONDS OR 3.419(L) FOR TEST LENGTHS GREATER THAN 199'
15"850 SECONDS OR 5.342(L) FOR TEST LENGTHS GREATER THAN 159'
18"1020 SECONDS OR 7.693(L) FOR TEST LENGTHS GREATER THAN 133'

WHERE L = LENGTH OF LINE OF SAME PIPE SIZE IN FEET.

14. "SAN. S. E." INDICATES "SANITARY SEWER EASEMENT"
15. FOR SANITARY MANHOLE (MH) RIMS SET INSIDE OF OR @ CURB & GUTTER PAVEMENT AND/OR BELOW T.C., MH RIMS WILL BE SET FLUSHED WITH AN ABUTTING PAVED SURFACE. THE (VALCUN, NEENAH OR EQUAL) HEAVY DUTY BOLTED SOLID MH COVER SHALL BE PROPERLY (AND SECURELY) ATTACHED AND SEALED TO ITS COMPATIBLE GASKETED FRAME BY USING BOTH A NEOPRENE GASKET AND (AT LEAST) 4 COUNTER–SUNK HEX–HEAD COARSE THREADED ½"–13 UNC STAINLESS STEEL BOLTS. THE HEAVY DUTY FRAME MH COVER SHALL BE SOLID (NO AIR HOLES). SAID FRAME SHALL BE BOTH EMBEDDED INTO THE MH'S TOP ALSO SECURELY ANCHORED TO THE UNDERLYING MH STRUCTURE WITH EITHER SECURELY ATTACHED EMBEDDED ANCHOR BOLTS OR THE CONCRETE MH'S EXPOSED REBARS WELDED TO THE FRAME OR OTHER EQUALLY SECURED METHODS TO PREVENT MH COVER/FRAME BLOW–OFFS/EJECTIONS.

STANDARD HARRIS COUNTY NOTES FOR PLANS

1. AUTHORIZATION NOTICE ISSUED BY HARRIS COUNTY PUBLIC INFRASTRUCTURE ENGINEERING DEPARTMENT PERMIT OFFICE REQUIRED PRIOR TO CONSTRUCTION OF UTILITIES OR LEFT TURN LANES WITHIN HARRIS COUNTY RIGHTS–OF–WAY. CONTACT HARRIS COUNTY PERMIT OFFICE (713)956–3000.
2. AUTHORIZATION NOTICES ISSUED BY HARRIS COUNTY PUBLIC INFRSTRUCTURE ENGINEEERING DEPARTMENT PERMIT OFFICE REQUIRED PRIOR TO CONSTRUCTION WITHIN HARRIS COUNTY FLOOD CONTROL RIGHT–OF–WAY. CONTACT HARRIS COUNTY PERMIT OFFICE (713)956–3000.
3. VENT PIPES WITHIN HARRIS COUNTY RIGHT–OF–WAY SHALL BE BREAKAWAY, PER DETAILS, UNESS OTHERWIDE INDICATED ON DRAWINGS AND APPROVED NY HARRIS COUNTY PUBLIC INFRASTRUCTURE ENGINEERING DEPARTMENT.
4. CONTRACTOR IS FULLY RESPONSIBLE FOR OBTAINING ALL PERMIT REQUIRED BY THE "REGULATIONS OF HARRIS COUNTY, TEXAS FOR FLOOD PLAIN MANAGEMENT" PRIOR TO START OF CONSTRUCTION.

HARRIS COUNTY APPENDIX D NOTES

1. WATER LINES, WASTEWATER COLLECTION SYSTEMS, AND STORM DRAINAGE SYSTEMS SHALL BE DESIGNED AND CONSTRUCTED IN ACCORDANCE WITH THE CITY OF HOUSTON'S, DEPARTMENT OF PUBLIC WORKS AND ENGINEERING 'DESIGN MANUAL, STANDARD CONSTRUCTION SPECIFICATIONS, AND DETAILS FOR WASTEWATER COLLECTION SYSTEMS, WATER LINES, STORM DRAINAGE AND STREET PAVING":
2. ALL STORM SEWER WILL BE REINFORCED CONCRETE (C76 CLASS III) AND SHALL BE INSTALLED, BEDDED AND BACKFILLED IN ACCORDANCE WITH THE CITY OF HOUSTON'S DRAWINGS 02317–02, 02317–03, 02317–05, 02317–06 AND 02317–07 AS APPLICABLE.
3. ALL STORM SEWERS CONSTRUCTED IN SIDE LOT EASEMENTS SHALL BE R.C.P., MINIMUM TWENTY (20) FOOT WIDE EASEMENTS SHALL BE PROVIDED.
4. AN ALTERNATIVE TO CEMENT STABILIZED SAND MAY BE USED AS BACKFILL FOR PIPES FIFTY–FOUR (54) INCH AND LARGER, FROM 1–FOOT ABOVE THE TOP OF THE PIPE TO THE BOTTOM OF THE SUBGRADE. CONTRACTOR MAY BACKFILL WITH SUITABLE MATERIAL, PROVIDED THE BACKFILL MATERIAL IS PLACED IN EIGHT (8) INCH LIFTS AND MECHANICALLY COMPACTED TO NINETY–FIVE (95)% STANDARD PROCTOR DENSITY. TESTS SHALL BE TAKEN AT ONE HUNDRED (100) FOOT INTERVALS ON EACH LIFT. BEDDING AND BACKFILL TO ONE (1) FOOT ABOVE THE TOP OF THE PIPE SHALL BE CEMENT–STABILIZED SAND.
5. ALL PROPOSED PIPE STUB–OUTS FROM MANHOLES/JUNCTION BOXES OR INLETS ARE TO BE PLUGGED WITH EIGHT (8) INCH BRICK WALLS UNLESS OTHERWISE NOTED.
6. THE CONTRACTOR(S) SHALL NOTIFY HARRIS COUNTY ENGINEERING DEPARTMENT – PERMIT OFFICE TWENTY–FOUR (24) HOURS IN ADVANCE OF COMMENCING UTILITY AND/OR PAVING CONSTRUCTION AT (713) 274–3931 AND WRITTEN NOTIFICATION FORTY– EIGHT (48) HOURS IN ADVANCE OF COMMENCING CONSTRUCTION AT 1111 FANNIN STREET 8TH FLOOR, HOUSTON, TEXAS, 77022.
7. PAVING SHALL BE IN ACCORDANCE WITH THE "REGULATIONS OF HARRIS COUNTY, TEXAS FOR THE APPROVAL AND ACCEPTANCE OF INFRASTRUCTURE" AND/OR AMENDMENTS OF THE SAME.
8. GUIDELINES SET FORTH IN THE LATEST EDITION OF THE "TEXAS MANUAL ON UNIFORM TRAFFIC CONTROL DEVICES, TMUCD WITH REVISIONS" SHALL BE OBSERVED.
9. OWNER OR OWNER'S AGENT TO OBTAIN ALL PERMITS REQUIRED BY THE "REGULATIONS OF HARRIS COUNTY, TEXAS FOR FLOODPLAIN MANAGEMENT" PRIOR TO STARTING CONSTRUCTION.
10. OWNER OR OWNER'S AGENT TO OBTAIN ALL NOTIFICATIONS REQUIRED BY HARRIS COUNTY, TEXAS

UTILITY NOTES

CENTERPOINT ENERGY

CAUTION: UNDERGROUND GAS FACILITIES

THE CONTRACTOR SHALL CONTACT THE UTILITY COORDINATING COMMITTEE AT 1-800-545-6005 OR 811 A MINIMUM OF 48 HOURS PRIOR TO CONSTRUCTION TO HAVE MAIN AND SERVICE LINES FIELD LOCATED.

- WHEN CENTERPOINT ENERGY PIPE LINE MARKINGS ARE NOT VISIBLE, CALL (713) 207-5463 OR (713) 945-8037 (7:00 A.M. TO 4:30 P.M.) FOR STATUS OF LINE LOCATION REQUEST BEFORE EXCAVATION BEGINS.
- WHEN EXCAVATING WITHIN EIGHTEEN INCHES (18") OF THE INDICATED LOCATION OF CENTERPOINT ENERGY FACILITIES, ALL EXCAVATION MUST BE ACCOMPLISHED USING NON-MECHANIZED EXCAVATION PROCEDURES.
- WHEN CENTERPOINT ENERGY FACILITIES ARE EXPOSED, SUFFICIENT SUPPORT MUST BE PROVIDED TO THE FACILITIES TO PREVENT EXCESSIVE STRESS ON THE PIPING.
- FOR EMERGENCIES REGARDING GAS LINES CALL (713) 659-2111 OR (713) 207-4200.

THE CONTRACTOR IS FULLY RESPONSIBLE FOR ANY DAMAGES CAUSED BY HIS FAILURE TO EXACTLY LOCATE AND PRESERVE THESE UNDERGROUND FACILITIES.

WARNING: OVERHEAD ELECTRICAL LINES:

OVERHEAD LINES MAY EXIST ON THE PROPERTY. THE LOCATION OF OVERHEAD LINES HAS NOT BEEN SHOWN ON THESE DRAWINGS AS THE LINES ARE CLEARLY VISIBLE, BUT YOU SHOULD LOCATE THEM PRIOR TO BEGINNING ANY CONSTRUCTION. TEXAS LAW, SECTION 752, HEALTH & SAFETY CODE, FORBIDS ACTIVITIES THAT OCCUR IN CLOSE PROXIMITY TO HIGH VOLTAGE LINES, SPECIFICALLY:

- ANY ACTIVITY WHERE PERSON OR THINGS MAY COME WITHIN SIX (6) FEET OF LIVE OVERHEAD HIGH VOLTAGE LINES; AND
- OPERATING A CRANE, DERRICK, POWER SHOVEL, DRILLING RIG, PILE DRIVER, HOISTING EQUIPMENT, OR SIMILAR APPARATUS WITHIN 10 FEET OF LIVE OVERHEAD HIGH VOLTAGE LINES.

PARTIES RESPONSIBLE FOR THE WORK, INCLUDING CONTRACTORS, ARE LEGALLY RESPONSIBLE FOR THE SAFETY OF CONSTRUCTION WORKERS UNDER THIS LAW. THIS LAW CARRIES BOTH CRIMINAL AND CIVIL LIABILITY. TO ARRANGE FOR LINES TO BE TURNED OFF OR REMOVED CALL CENTERPOINT ENERGY AT (713) 207-2222.

ACTIVITIES ON OR ACROSS CENTERPOINT ENERGY FEE OR EASEMENT PROPERTY

NO APPROVAL TO USE, CROSS OR OCCUPY CENTERPOINT FEE OR EASEMENT PROPERTY IS GIVEN. IF YOU NEED TO USE CENTERPOINT PROPERTY, PLEASE CONTACT OUR SURVEYING AND RIGHT OF WAY DIVISION AT (713) 207-6348 OR (713) 207-5769.

WARNING: UNDERGROUND ELECTRICAL UTILITIES:

THE CONTRACTOR SHALL CONTACT THE UTILITY COORDINATING COMMITTEE AT 1-800-545-6005 OR 811 A MINIMUM OF 48 HOURS PRIOR TO CONSTRUCTION TO HAVE MAIN AND SERVICE LINES FIELD LOCATED.

- ALL INFORMATION CONCERNING TYPE AND LOCATION OF UNDERGROUND UTILITIES IS NOT GUARANTEED TO BE ACCURATE OR ALL INCLUSIVE. THE CONTRACTORS ARE RESPONSIBLE MAKING THEIR OWN DETERMINATIONS AS TO TYPE AND LOCATION OF UNDERGROUND UTILITIES AS MAY BE NECESSARY TO AVOID DAMAGE THERETO. THE CONTRACTOR SHALL VERIFY LOCATION OF UNDERGROUND PIPELINES, CONDUITS, AND STRUCTURES BY CONTACTING OWNERS OF UNDERGROUND UTILITIES OR BY EXCAVATING IN ADVANCE OF CONSTRUCTION.
- THE CONTRACTOR IS RESPONSIBLE FOR DETERMINING THE EXACT LOCATION OF ALL UTILITIES WHEN AND WHERE THEY FALL IN THE PATH OF CONSTRUCTION.
- THE CONTRACTOR IS ALSO RESPONSIBLE FOR CONTACTING THE UTILITY COORDINATING COMMITTEE AT (713) 223-4567 AND TEXAS ONE CALL AT 1-800-245-4545, FORTY-EIGHT (48) HOURS PRIOR TO ANY CONSTRUCTION.
- THE LOCATION OF ANY CENTERPOINT ENERGY UTILITIES ARE SHOWN IN APPROXIMATE WAY ONLY. THE CONTRACTOR SHALL DETERMINE THE EXACT LOCATION BEFORE COMMENCING WORK. THEY AGREE TO BE FULLY RESPONSIBLE FOR ANY AND ALL DAMAGES WHICH MIGHT BE OCCASIONED BY THIS FAILURE TO EXACTLY LOCATE AND PRESERVE THESE UNDERGROUND UTILITIES.
- ALL PROPOSED FACILITIES SHALL MAINTAIN 12" CLEAR FROM ALL EXISTING UTILITIES.

COMCAST

1. THE LOCATION OF COMCAST CABLE FACILITIES ARE SHOWN IN AN APPROXIMATE WAY ONLY. THE CONTRACTOR WILL DETERMINE THE EXACT LOCATION BEFORE COMMENCING WORK. CONTRACTOR AGREES TO BE FULLY RESPONSIBLE FOR ANY AND ALL DAMAGES, WHICH MIGHT BE OCCASIONED BY THIS FAILURE TO EXACTLY LOCATE AND PRESERVE THESE UNDERGROUND LINES FIELD LOCATED.
2. THE CONTRACTOR WILL CALL TEXAS ONE-CALL AT 1-800-245-4545 A MINIMUM OF 48 HOURS PRIOR TO CONSTRUCTION TO HAVE UNDERGROUND LINES FIELD LOCATED.
3. WHEN EXCAVATING WITHIN EIGHTEEN INCHES (18") OF THE INDICATED LOCATION OF COMCAST CABLE FACILITIES, ALL EXCAVATION MUST BE ACCOMPANIED USING NON-MECHANIZED EXCAVATION PROCEDURES. WHEN BORING, THE CONTRACTOR SHALL EXPOSE THE COMCAST CABLE FACILITIES.
4. WHEN COMCAST CABLE FACILITIES ARE EXPOSED, THE CONTRACTOR WILL PROVIDE SUPPORT TO PREVENT DAMAGE TO THE CONDUIT DUCTS OR CABLES. WHEN EXCAVATING NEAR TELEPHONE POLES, THE CONTRACTOR WILL BRACE THE POLE FOR SUPPORT.
5. THE CONTRACTOR WILL DETERMINE THE EXACT LOCATION OF THE UNDERGROUND FACILITIES BEFORE COMMENCING WORK AND AGREES TO BE FULLY RESPONSIBLE FOR ALL DAMAGES CAUSED BY THIS FAILURE TO EXACTLY LOCATE AND PRESERVE ALL UNDERGROUND FACILITIES.

AT&T TEXAS/SWBT FACILITIES

1. THE LOCATIONS OF AT&T TEXAS/SWBT FACILITIES ARE SHOWN IN AN APPROXIMATE WAY ONLY. THE CONTRACTOR SHALL DETERMINE THE EXACT LOCATION BEFORE COMMENCING WORK. HE AGREES TO BE FULLY RESPONSIBLE FOR ANY AND ALL DAMAGES WHICH MIGHT BE OCCASIONED BY THIS FAILURE TO EXACTLY LOCATE AND PRESERVE THESE UNDERGROUND UTILITIES.
2. THE CONTRACTOR SHALL CALL 1-800-344-8377 (TEXAS 811) A MINIMUM OF 48 HOURS PRIOR TO CONSTRUCTION TO HAVE UNDERGROUND LINES FIELD LOCATED.
3. WHEN EXCAVATING WITHIN EIGHTEEN INCHES (18") OF THE INDICATED LOCATION OF AT&T TEXAS/SWBT FACILITIES, ALL EXCAVATIONS MUST BE ACCOMPLISHED USING NON-MECHANIZED EXCAVATION PROCEDURES. WHEN BORING, THE CONTRACTOR SHALL EXPOSE THE AT&T TEXAS/SWBT FACILITIES.
4. WHEN AT&T TEXAS/SWBT FACILITIES ARE EXPOSED, THE CONTRACTOR WILL PROVIDE SUPPORT TO PREVENT DAMAGE TO THE CONDUIT DUCTS OR CABLES. WHEN EXCAVATING NEAR TELEPHONE POLES THE CONTRACTOR SHALL BRACE THE POLE FOR SUPPORT.
5. THE PRESENCE OR ABSENCE OF AT&T TEXAS/SWBT UNDERGROUND CONDUIT FACILITIES OR BURIED CABLE FACILITIES SHOWN ON THESE PLANS DOES NOT MEAN THAT THERE ARE NO DIRECT BURIED CABLES OR OTHER CABLES IN CONDUIT IN THE AREA.
6. PLEASE CONTACT THE AT&T TEXAS DAMAGE PREVENTION MANAGER KEVIN RAY AT (713) 614-1983 OR E-MAIL HIM AT kr7896@att.com, IF CABLE LOCATE REQUESTS ARE NOT COMPLETED FOR AT&T TEXAS/SWBT FACILITIES.

UTILITY COORDINATION

1. CENTERPOINT GAS AND ELECTRIC:
   - CONTRACTOR SHALL CONTACT CYNTHIA MARTINEZ AT CINDY.MARTINEZ@CENTERPOINTENERGY.COM AT LEAST 72 HOURS PRIOR TO CONSTRUCTION AROUND CENTERPOINT GAS AND ELECTRIC UTILITIES.
2. VERIZON:
   - CONTRACTOR SHALL CONTACT – MICHAEL MABE AT 832-917-7790 AND MICHAEL.MABE@VERIZON.COM AT LEAST 72 HOURS PRIOR TO CONSTRUCTION AROUND VERIZON FIBER/CABLE UTILITIES.
3. AT&T:
   - CONTRACTOR SHALL CONTACT KATHY TINNEY AT 713-485-8128 AND KT145J@ATT.COM AT LEAST 72 HOURS PRIOR TO CONSTRUCTION AROUND AT&T FIBER/CABLE UTILITIES.
4. COMCAST:
   - CONTRACTOR SHALL CONTACT CORY THOMAS AT CORY.THOMAS@COMCAST.COM AT LEAST 72 HOURS PRIOR TO CONSTRUCTION AROUND COMCAST FIBER/CABLE UTILITIES.

HCED GENERAL NOTES

1. PRIOR TO CONSTRUCTION THE CONTRACTOR SHALL SECURE "TRACK ALLOCATION PERMITS" ISSUED BY METRO RAIL OPERATIONS. CONTACT EDDIE ESPINOSA (EDDIE.ESPINOSA@RIDEMETRO.ORG, 832-392-0758) FOR TRACK ALLOCATION REQUESTS AND TRACK ACCESS PROCEDURES.
2. THE CONTRACTOR SHALL FIELD VERIFY EXISTING CONDITIONS BEFORE BEGINNING CONSTRUCTION.
3. THE CONTRACTOR IS RESPONSIBLE FOR PROVIDING SECURITY TO PROTECT THE PROJECT SITE, CONTRACTOR PROPERTY, EQUIPMENT, AND WORK.
4. THE CONTRACTOR IS RESPONSIBLE FOR CLEANING STREETS OF CONSTRUCTION DIRT AND DEBRIS AT CLOSE OF EACH WORK DAY.
5. THE CONDITION OF THE ROAD AND/OR RIGHT-OF-WAY, UPON COMPLETION OF THE JOB SHALL BE AS GOOD AS OR BETTER THAN PRIOR TO STARTING WORK.
6. PRIOR TO CONSTRUCTION, THE CONTRACTOR, ALONG WITH CONCURRENCE FROM THE FIELD ENGINEER, SHALL DETERMINE HIS/HER LAY-DOWN AND/OR STAGING AREA LOCATIONS.
7. THE CONTRACTOR SHALL NOTIFY ALL PROPERTY OWNERS A MINIMUM OF 24 HOURS PRIOR TO BLOCKING DRIVEWAYS OR ENTERING UTILITY EASEMENTS.
8. TRAFFIC INGRESS AND EGRESS FOR DRIVEWAYS AND PEDESTRIAN ACCESS FACILITIES SHALL BE MAINTAINED THROUGHOUT CONSTRUCTION.
9. THE CONTRACTOR SHALL REMOVE ANY FENCES, POSTS, MAILBOXES, PLANTERS, PERMANENT TRASH CONTAINERS, CULVERTS, ETC. OR SECTIONS THEREOF, THAT ENCROACH WITHIN THE COUNTY'S RIGHT-OF-WAY. NOTE: PRIOR TO CONSTRUCTION, THE PROPERTY OWNER WAS PAID TO RELOCATE OR REPLACE THESE ITEMS OUTSIDE OF THE COUNTY'S RIGHT-OF-WAY. IF THE OWNER HAS FAILED TO DO SO, THE CONTRACTOR WILL REPLACE THEM WITH THE MINIMUM LEVEL OF QUALITY NEEDED TO SECURE THE PROPERTY AND/OR MAINTAIN MAIL DELIVERY. IN THAT CASE, PAYMENT FOR THESE INSTALLATIONS WILL BE INCLUDED AS EXTRA WORK ITEMS OR AS OVERRUNS TO EXISTING PAY ITEMS.
10. ANY DAMAGE CAUSED BY THE CONTRACTOR TO SUCH ITEMS LOCATED OUTSIDE OF THE COUNTY'S RIGHT-OF-WAY, SHALL BE REPLACED WITH LIKE-KIND OR BETTER AT THE CONTRACTOR'S EXPENSE.
11. ALSO, IF THESE ITEMS ARE LOCATED WITHIN THE PROJECT RIGHT-OF-WAY AND ARE DESIGNATED TO REMAIN, ANY DAMAGE CAUSED BY THE CONTRACTOR TO SUCH ITEMS, SHALL BE REPLACED WITH LIKE-KIND OR BETTER AT THE CONTRACTOR'S EXPENSE.
12. TREES, BUSHES, SHRUBBERY AND OTHER DAMAGED PLANTINGS DESIGNATED TO REMAIN SHALL BE REPLACED WITHIN 72 HOURS OF REMOVAL AND ARE TO BE THOROUGHLY WATERED-IN. NO SEPARATE PAY.
13. PAVED SURFACES, PAVEMENT MARKERS AND MARKINGS SHALL BE PROTECTED FROM DAMAGE BY TRACKED EQUIPMENT.
14. IRON RODS DISTURBED DURING CONSTRUCTION ARE TO BE REPLACED BY A REGISTERED PROFESSIONAL LAND SURVEYOR FOR THE ORIGINAL PROPERTY OWNER AT NO SEPARATE PAY.
15. CONSTRUCTION STAKING WILL BE PROVIDED BY THE CONTRACTOR. TWO COPIES OF STAKING NOTES TO BE PROVIDED TO THE ENGINEER PRIOR TO CONSTRUCTION.
16. THE COUNTY OR THE COUNTY'S SURVEYOR SHALL PROVIDE A BENCHMARK OR TEMPORARY BENCHMARK AND SURVEY CONTROLS.
17. THE CONTRACTOR SHALL MAINTAIN UPDATED RED-LINED RECORD DRAWINGS ON SITE FOR INSPECTION BY THE ENGINEER.
18. MOWING, MAINTENANCE, AND CLEAN-UP OF THE PROJECT SHALL MEET THE REQUIREMENT OF STANDARD SPECIFICATION ITEM 560 (NO SEPARATE PAY). MOWING, MAINTENANCE, AND CLEAN-UP IS REQUIRED FOR THE PROJECT LIMITS AND DURATION, REGARDLESS OF THE CONTRACTOR'S SCOPE OF ACTIVITIES WITHIN THE PROJECT LIMITS.
19. THE REMOVAL OF ANY ABANDONED UTILITIES REQUIRED TO COMPLETE THE WORK SHALL BE INCIDENTAL AND NO SEPARATE PAYMENT SHALL BE MADE.
20. IT IS THE CONTRACTOR'S RESPONSIBILITY TO STOCKPILE NECESSARY MATERIAL ON-SITE OR AT A SECURED OFF-SITE LOCATION AT NO ADDITIONAL EXPENSE TO HARRIS COUNTY. ANY SUITABLE EXCAVATED MATERIAL ON THE PROJECT WHICH IS AVAILABLE AT THE TIME OF NEED; WHETHER FROM STORM SEWER, ROADWAY, AND/OR CHANNEL EXCAVATION, SHALL BE USED BEFORE BORROW IS BROUGHT ON-SITE.
21. MANHOLES, JUNCTION BOXES, INLETS, AND RISERS ARE TO BE PRECAST OR CAST-IN-PLACE.

NOTICE:
FOR YOUR SAFETY, YOU ARE REQUIRED BY TEXAS LAW TO CALL 811 AT LEAST 48 HOURS BEFORE YOU DIG SO THAT UNDERGROUND LINES CAN BE MARKED. THIS SIGNATURE DOES NOT FULFILL YOUR OBLIGATION TO CALL 811

VERIFICATION OF PRIVATE UTILITY LINES

Date

CenterPoint Energy natural gas utilities shown. (Gas service lines are not shown). This signature not be used for conflict verification.

Signature valid for six months.

Date

CenterPoint Energy/UNDERGROUND Electrical Facilities Verification ONLY. (This signature verifies existing underground facilities – not to be used for conflict verification)

Signature valid for six months.

Date

Approved for AT&T underground conduit facilities only.
Signature valid for one year.

A TETRA TECH COMPANY
Texas PE Firm Reg. #F-929
575 N. Dairy Ashford, Suite 700,
Houston, Texas 77079
T +1 281 589 7257
E usinfrastructure@rpsgroup.com

SURVEYED BY: KUO Inc.
FB NO. F-4578

This document is released for the purposes of interim review only under the authority of:

Jeremy Austin, P.E.
Texas P.E. No. 116816
09/11/2026

It is not to be used for bidding, construction, or permitting purposes.

CITY OF HOUSTON
HOUSTON PUBLIC WORKS

LIFT STATION REHABILITATION & RECONSTRUCTION

GENERAL NOTES
(SHEET 2 OF 2)
G-8

WBS NUMBER	FOR CITY OF HOUSTON USE ONLY
R-000267-178A-3	
DRAWING SCALE	
AS NOTED	
CITY OF HOUSTON PM	
TAHA LOTIA	
SHEET NO. 8 OF 147	

FILE PATH: C:\Users\andres.martinezjr\DC\ACCDocs\Tetra Tech Inc\200-317106-24001 COH LS Rehab Design\Project Files\CAD\R-000267-178A-3-STY-Estados-NOTES (SHEETED: 09/9/2026 4:53 PM

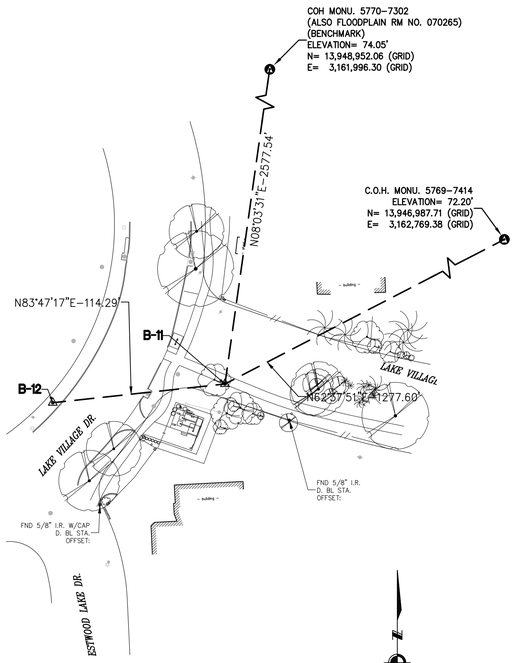
COH MONU. 5770-7302
(ALSO FLOODPLAIN RM NO. 070265)
(BENCHMARK)
ELEVATION= 74.05'
N= 13,948,952.06 (GRID)
E= 3,161,996.30 (GRID)
N08°03'31"E-2577.54'
C.O.H. MONU. 5769-7414
ELEVATION= 72.20'
N= 13,946,987.71 (GRID)
E= 3,162,769.38 (GRID)
N83°47'17"E-114.29'
B-11
B-12
N62°37'51"E-1277.60'
LAKE VILLAGE DR.
FND 5/8" I.R. W/CAP
D. BL. STA.
OFFSET:
FND 5/8" I.R.
D. BL. STA.
OFFSET:
- building -
- building -
- building -

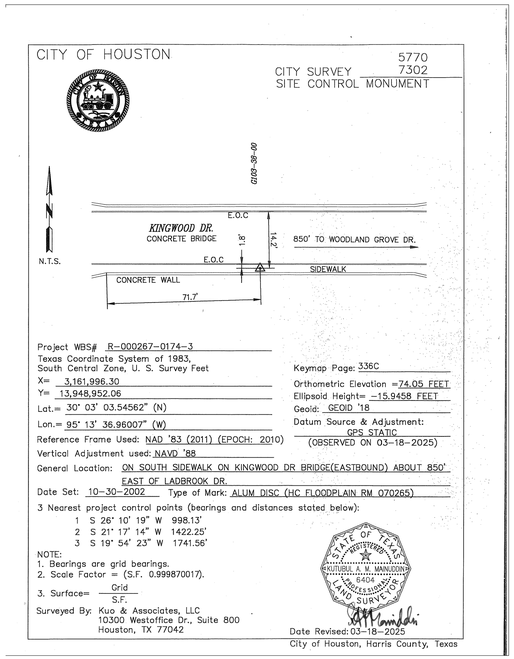

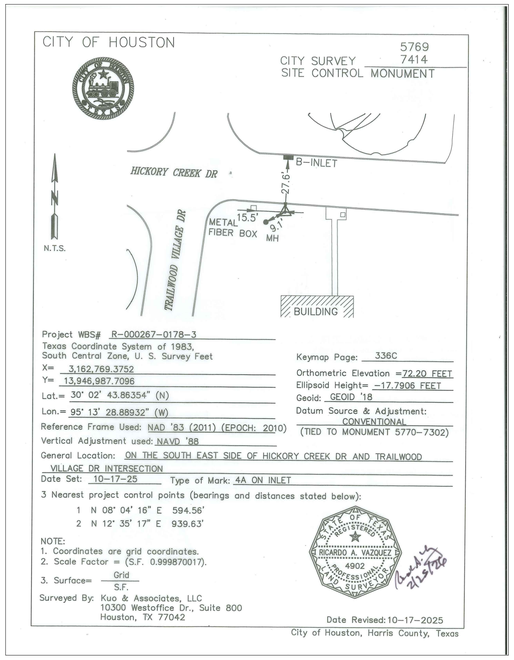

SURVEY BASELINE POINTS DATA (TEMPORARY BENCHMARK)

POINT No.	NORTHING (SURFACE)	EASTING (SURFACE)	NORTHING (GRID)	EASTING (GRID)	ELEVATION	D. BL STA.	OFFSET	DESCRIPTION
B-11	13,948,213.47	3,162,045.94	13,946,400.44	3,161,634.93	75.61'	2+12.62	20.81R	SET 'X' CUT ON CONC.
B-12	13,948,201.11	3,161,932.32	13,946,388.08	3,161,521.33	74.02'	1+09.15	69.36R	SET 1/2" I.R. W/CAP
B-14	13,949,717.86	3,163,385.32	13,947,904.63	3,162,974.13	72.13'	-	-	SET 'X' CUT ON CONC.
B-15	13,949,552.77	3,163,365.23	13,947,739.56	3,162,954.05	72.66'	28+16.37	17.77R	SET 1/2" I.R. W/CAP
B-101	13,948,195.16	3,162,250.46	13,946,382.13	3,161,839.43	75.65'	4+15.97	7.12L	SET 1/2" I.R. W/CAP
B-102	13,948,180.29	3,162,406.22	13,946,367.26	3,161,995.16	75.05'	5+71.68	12.12R	SET 1/2" I.R. W/CAP
B-103	13,948,183.00	3,162,540.69	13,946,369.98	3,162,129.62	76.24'	7+06.14	15.38R	FND 5/8" I.R. W/UNITED CAP
B-104	13,948,214.06	3,162,712.75	13,946,401.03	3,162,301.65	73.45'	8+79.40	8.00L	SET 'X' CUT ON CONC.
B-105	13,948,200.61	3,163,092.53	13,946,387.58	3,162,681.38	72.21'	14+23.36	4.82R	SET 'X' CUT ON CONC.
B-106	13,948,533.40	3,163,078.72	13,946,720.33	3,162,667.58	72.75'	17+54.86	19.57L	SET 'X' CUT ON CONC.
B-107	13,948,829.53	3,163,110.53	13,947,016.42	3,162,699.38	72.34'	20+51.03	23.40L	SET 'X' CUT ON CONC.
B-108	13,949,099.62	3,163,168.70	13,947,286.48	3,162,757.54	72.48'	23+24.99	23.63L	SET 'X' CUT ON CONC.
B-109	13,949,389.49	3,163,264.01	13,947,576.31	3,162,852.84	71.65'	26+28.12	20.50L	SET 'X' CUT ON CONC.

DESIGN BASELINE POINTS DATA

POINT No.	D. BL STA.	NORTHING (SURFACE)	EASTING (SURFACE)	NORTHING (GRID)	EASTING (GRID)	MATERIAL SET
C-1	1+00.00	13,948,269.69	3,161,946.17	13,946,456.65	3,161,535.17	SET 1/2" I.R. W/CAP
C-2	2+01.18	13,948,236.87	3,162,041.87	13,946,423.83	3,161,630.86	SET 1/2" I.R. W/CAP
C-3	2+60.88	13,948,217.50	3,162,098.34	13,946,404.47	3,161,687.32	SET 1/2" I.R. W/CAP
C-4	4+39.05	13,948,187.92	3,162,305.10	13,946,374.90	3,161,894.05	SET 1/2" I.R. W/CAP
C-5	10+70.92	13,948,214.58	3,162,904.43	13,946,401.55	3,162,493.31	SET 'X' CUT ON CONC.
C-6	12+54.55	13,948,217.76	3,163,088.01	13,946,404.73	3,162,676.86	SET 'X' CUT ON CONC.
C-7	13+00.00	13,948,216.87	3,163,133.45	13,946,403.84	3,162,722.30	SET 'X' CUT ON CONC.
C-8	14+00.00	13,948,177.34	3,163,087.30	13,946,364.31	3,162,676.16	SET 'X' CUT ON CONC.
C-9	15+63.23	13,948,340.54	3,163,090.16	13,946,527.49	3,162,679.01	SET 'X' CUT ON CONC.
C-10	17+10.24	13,948,487.44	3,163,095.30	13,946,674.38	3,162,684.15	SET 'X' CUT ON CONC.
C-11	20+11.44	13,948,786.80	3,163,127.53	13,946,973.69	3,162,716.38	SET 'X' CUT ON CONC.
C-12	20+71.97	13,948,846.61	3,163,136.89	13,947,033.50	3,162,725.73	SET 'X' CUT ON CONC.
C-13	26+21.86	13,949,376.50	3,163,281.07	13,947,563.32	3,162,869.90	SET 'X' CUT ON CONC.
C-14	28+50.00	13,949,590.47	3,163,360.23	13,947,777.26	3,162,949.05	SET 'X' CUT ON CONC.
C-15	2+00.00	13,948,155.86	3,162,009.66	13,946,342.84	3,161,598.65	SET 1/2" I.R. W/CAP
C-16	1+00.00	13,948,248.78	3,162,046.61	13,946,435.75	3,161,635.60	SET 1/2" I.R. W/CAP

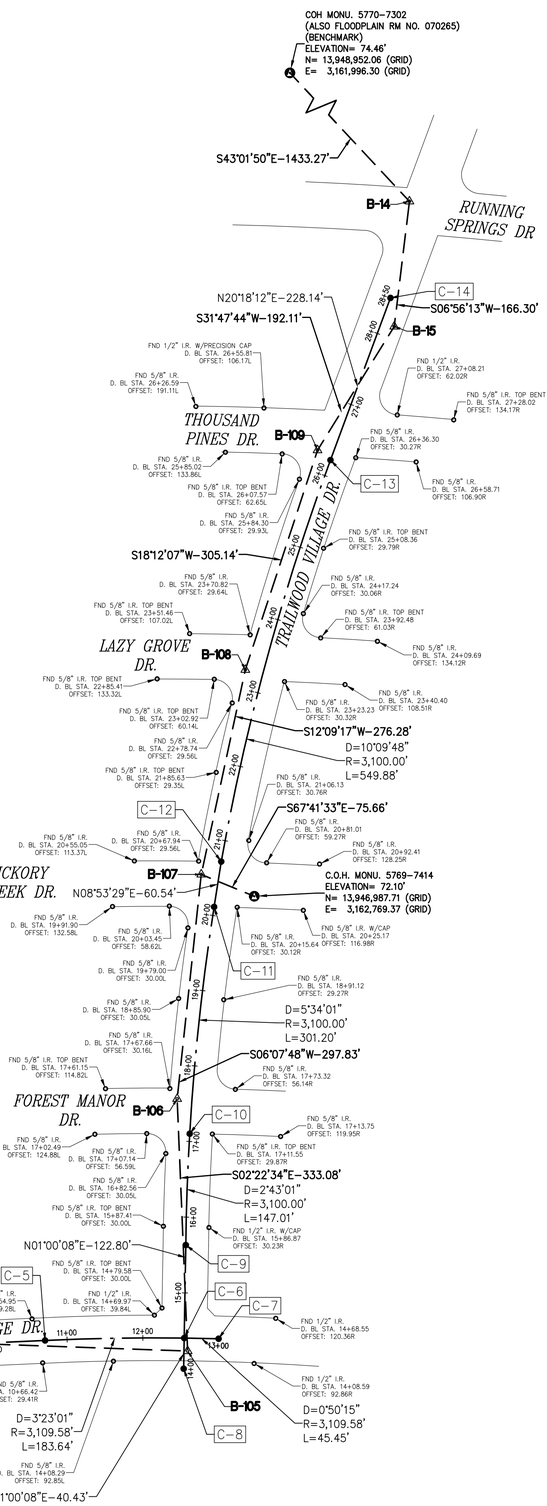

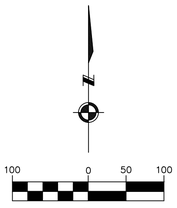

NO.	DATE	REVISION	APP.

BENCHMARK:

CITY OF HOUSTON MONUMENT 5770-7302 (ALSO FLOODPLAIN REFERENCE MARK NUMBER 070265) IS AN ALUMINUM DISK STAMPED G 103-38 BM 01 LOCATED ON SOUTH SIDEWALK ON KINGWOOD DRIVE EASTBOUND BRIDGE APPROXIMATELY 1.5 MILES EAST FROM THE INTERSECTION OF US 59 IN KEYMAP 336C IN THE SAN JACINTO RIVER WATERSHED

ELEV. 74.46 FEET NAVD 1988, 2001 ADJUSTMENT (PROJECT DATUM)
ELEV. 74.05 FEET NAVD 1988, (GEOID '18)*

* OBSERVED BY GPS SURVEYING AND PROCESSED IN REFERENCE TO THE CORS DATED MARCH 18, 2025

VERTICAL DATUM ADJUSTMENT:

THE ELEVATION DIFFERENCE IN BETWEEN THE FLOODPLAIN REFERENCE MARK'S (RM 070265)PUBLISHED DATUM NAVD 1988, 2001 ADJUSTMENT AND DATUM NAVD 1988, (GEOID '18) IS 0.41'.

NAVD 1988, 2001 ADJ. ELEVATION
= NAVD 1988 (GEOID '18) ELEVATION + 0.41 FT

NOTE:

ALL BEARINGS AND DISTANCES ARE BASED ON TEXAS STATE PLANE COORDINATE SYSTEM, SOUTH CENTRAL ZONE, NAD83. ALL DISTANCES ARE IN SURFACE.

THE COORDINATES SHOWN HEREON ARE TEXAS SOUTH CENTRAL ZONE NO. 4204 STATE PLANE GRID COORDINATES (NAD83) AND MAY BE BROUGHT TO SURFACE BY DIVIDING BY THE COMBINED SCALE FACTOR 0.999870017.

LEGEND:

B-X	SURVEY CONTROL POINT NUMBER
C-X	DESIGN BASELINE POINT NUMBER
⚠	SURVEY CONTROL POINT
•	DESIGN BASELINE POINT
✪	CITY OF HOUSTON MONUMENT
D. BL:	DESIGN BASELINE
S. BL:	SURVEY BASELINE

rps
A TETRA TECH COMPANY
Texas PE Firm Reg. #F-929
575 N. Dairy Ashford, Suite 700,
Houston, Texas 77079
T +1 281 589 7257
E usinfrastructure@rpsgroup.com

KUO & ASSOCIATES
ENGINEERING + SURVEYING
10300 Westoffice Dr., Suite 800, Houston, Texas 77042
Tel: 713-975-8769, Fax: 713-975-0920, www.kuoassociates.com
TBPELS Firm Registration No. F-4578
TBPELS Firm Registration No. 1007560

SURVEYED BY: KUO & ASSOC.
FB NO. P-6420

THIS DOCUMENT IS RELEASED FOR THE PURPOSE OF INTERIM REVIEW UNDER THE AUTHORITY OF
KUTUBUL A. MAINUDDIN, R.P.L.S.
TEXAS REG. NO.: 6404
ON 07/24/2026
IT IS NOT TO BE USED FOR PERMIT, BIDDING OR CONSTRUCTION PURPOSES

CITY OF HOUSTON
HOUSTON PUBLIC WORKS

RECONSTRUCTION & REHABILITATION COH LIFT STATIONS TRAILWOOD DR GRAVITY ROUTE

SURVEY CONTROL MAP (SHEET 1 OF 2)

SC-2

WBS NUMBER	R-000267-00178A-3
DRAWING SCALE	1"=100'
CITY OF HOUSTON PM	TAHA LOTIA
SHEET NO.	10 OF 147

FOR CITY OF HOUSTON USE ONLY

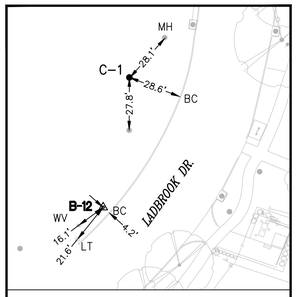

C-1 & T.B.M. B-12

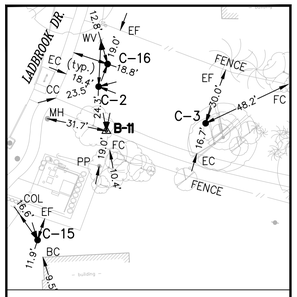

C-2, C-3, C-15, C-16 & T.B.M. B-11

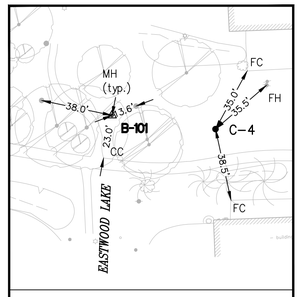

C-4 & T.B.M. B-101

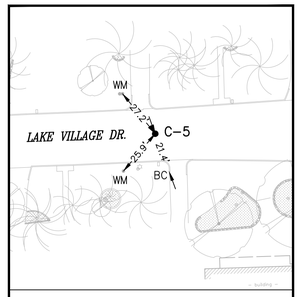

C-5

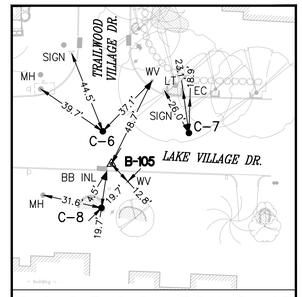

C-6, C-7, C-8 & T.B.M. B-105

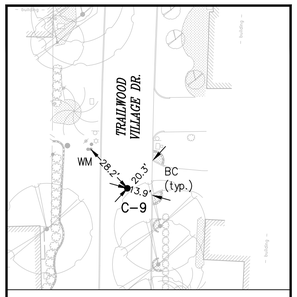

C-9

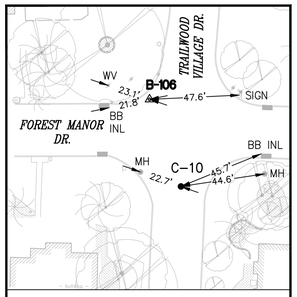

C-10 & T.B.M. B-106

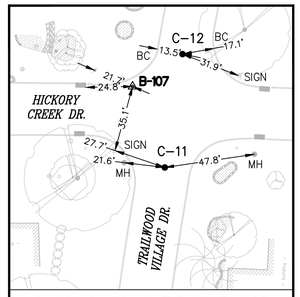

C-11, C-12 & T.B.M. B-107

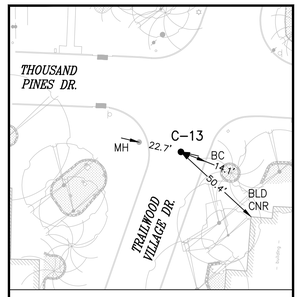

C-13

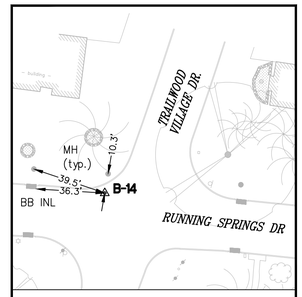

T.B.M. B-14

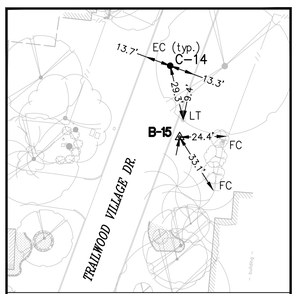

C-14 & T.B.M. B-15

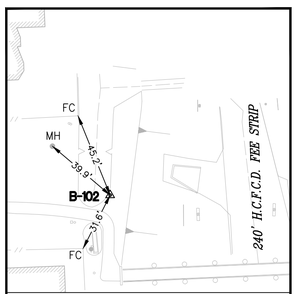

T.B.M. B-102

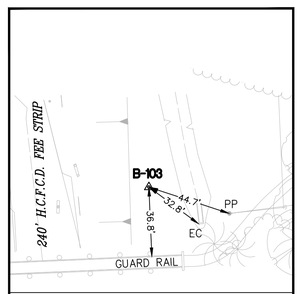

T.B.M. B-103

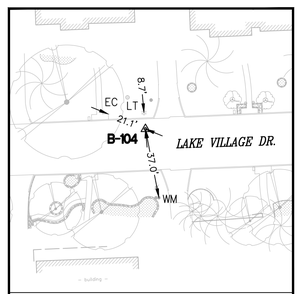

T.B.M. B-104

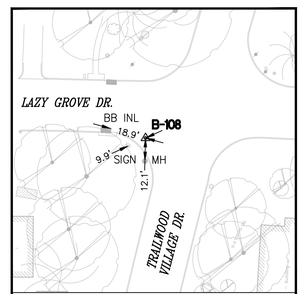

T.B.M. B-108

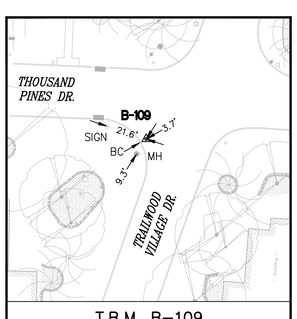

T.B.M. B-109

N

40 0 20 40

SCALE: 1" = 40'

NO.	DATE	REVISION	APP.

EXIST. TOPOGRAPHIC LEGEND

- ASPHALT SYMBOL
- B OR BB INLET
- BUSH
- C INLET
- CLEANOUT
- brick column
- DOWN GUY
- E INLET
- ELEC MANHOLE
- FIRE HYDRANT
- GAS METER
- GAS VALVE
- GATE
- GRATE INLET
- GRATE INLET
- MAIL BOX
- STORM MANHOLE
- SANITARY MANHOLE
- PLANTER
- POWER POLE
- POWER POLE W/LT.
- SIGN
- SIGNAL POLE
- SPRINKLER VALVE
- SPRINKLER HEAD
- STREET LIGHT/FLOOD LIGHT
- STREET LIGHT/PARKING LIGHT
- TREE
- TREE STUMP
- TREE-CREPE MYRTLE
- TREE-PINE
- WATER METER
- WATER VALVE
- IRRIGATION CONTROL VALVE

ABBREVIATIONS

BC – BACK OF CURB
EA – EDGE OF ASPHALT
EC – EDGE OF CONCRETE
EG – EDGE OF GRAVEL
EF – EDGE OF FENCE
FH – FIRE HYDRANT
FC – FENCE CORNER
CC – CONCRETE CORNER
LT – LIGHT POLE
MB – MAIL BOX
MH – MANHOLE
PP – POWER POLE
PP/LIGHT – POWER POLE W/LIGHT
STLT – STREET LIGHT
TRLT – TRAFFIC LIGHT
WM – WATER METER
WV – WATER VALVE
COL – COLUMN

A TETRA TECH COMPANY
Texas PE Firm Reg. #F-929
575 N. Dairy Ashford, Suite 700,
Houston, Texas 77079
T +1 281 589 7257
E usinfrastructure@rpsgroup.com

KUO & ASSOCIATES
ENGINEERING + SURVEYING
10300 Westoffice Dr., Suite 800, Houston, Texas 77042
Tel: 713-975-8769, Fax: 713-975-0920, www.kuoassociates.com
TBPELS Firm Registration No. F-4578
TBPELS Firm Registration No. 1007560

SURVEYED BY: KUO & ASSOC.
FB NO. P-6420

THIS DOCUMENT IS RELEASED FOR THE PURPOSE OF INTERIM REVIEW UNDER THE AUTHORITY OF
KUTUBUL A. MAINUDDIN, R.P.L.S.
TEXAS REG. NO.: 6404
ON 07/24/2026
IT IS NOT TO BE USED FOR PERMIT, BIDDING OR CONSTRUCTION PURPOSES

CITY OF HOUSTON

HOUSTON PUBLIC WORKS

RECONSTRUCTION & REHABILITATION
COH LIFT STATIONS
TRAILWOOD DR GRAVITY ROUTE

SURVEY CONTROL MAP
(SHEET 2 OF 2)

SC – 3

WBS NUMBER	FOR CITY OF HOUSTON USE ONLY
R-000267-00178A-3	
DRAWING SCALE	
1"=40'	
CITY OF HOUSTON PM	
TAHA LOTIA	
SHEET NO. 11 OF 147	

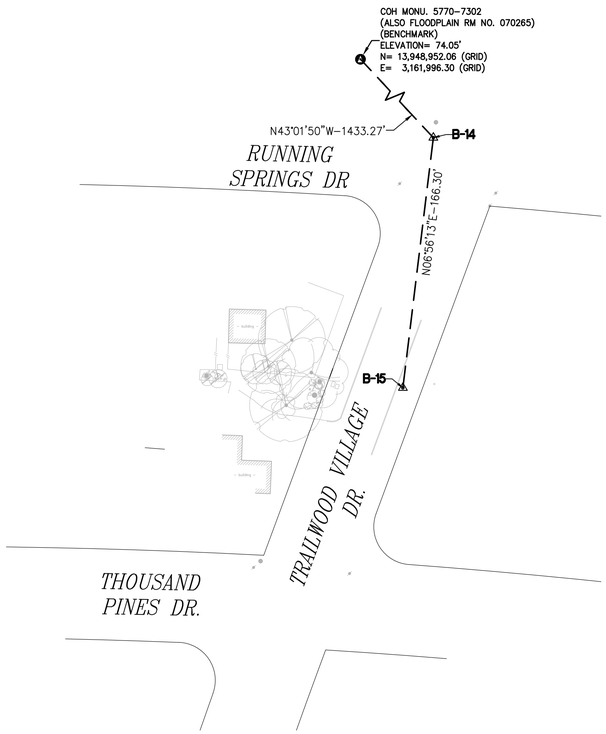

SURVEY BASELINE POINTS DATA (TEMPORARY BENCHMARK)						
POINT No.	NORTHING (SURFACE)	EASTING (SURFACE)	NORTHING (GRID)	EASTING (GRID)	ELEVATION	DESCRIPTION
B-14	13,949,717.86	3,163,385.32	13,947,904.63	3,162,974.13	72.13'	SET "X" CUT ON CONC.
B-15	13,949,552.77	3,163,365.23	13,947,739.56	3,162,954.05	72.66'	SET 1/2" I.R. W/CAP

CITY OF HOUSTON

CITY SURVEY 5770
SITE CONTROL MONUMENT 7302

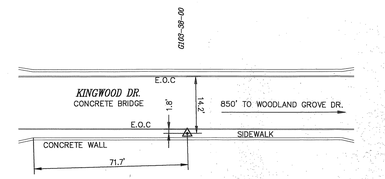

Project WBS# R-000267-0174-3
Texas Coordinate System of 1983,
South Central Zone, U. S. Survey Feet
X= 3,161,996.30
Y= 13,948,952.06
Lat.= 30° 03' 03.54562" (N)
Lon.= 95° 13' 36.96007" (W)
Reference Frame Used: NAD '83 (2011) (EPOCH: 2010)
Vertical Adjustment used: NAVD '88
General Location: ON SOUTH SIDEWALK ON KINGWOOD DR BRIDGE(EASTBOUND) ABOUT 850' EAST OF LADBROOK DR.
Date Set: 10-30-2002 Type of Mark: ALUM DISC (HC FLOODPLAIN RM 070265)

Keymap Page: 336C
Orthometric Elevation =74.05 FEET
Ellipsoid Height= -15.9458 FEET
Geoid: GEOID '18
Datum Source & Adjustment: GPS STATIC (OBSERVED ON 03-18-2025)

3 Nearest project control points (bearings and distances stated below):
1 S 26° 10' 19" W 998.13'
2 S 21° 17' 14" W 1422.25'
3 S 19° 54' 23" W 1741.56'

NOTE:
1. Bearings are grid bearings.
2. Scale Factor = (S.F. 0.99987017).
3. Surface= Grid / S.F.

STATE OF TEXAS — KUTUBUL A. M. MAINUDDIN — 6404 — REGISTERED PROFESSIONAL LAND SURVEYOR

Surveyed By: Kuo & Associates, LLC
10300 Westoffice Dr., Suite 800
Houston, TX 77042

Date Revised: 03-18-2025
City of Houston, Harris County, Texas

EXIST. TOPOGRAPHIC LEGEND

ASPHALT SYMBOL	PLANTER
B OR BB INLET	POWER POLE
BUSH	POWER POLE W/LT.
C INLET	SIGN
CLEANOUT	SIGNAL POLE
brick column	SPRINKER VALVE
DOWN GUY	SPRINKLER HEAD
E INLET	STREET LIGHT/FLOOD LIGHT
ELEC MANHOLE	STREET LIGHT/PARKING LIGHT
FIRE HYDRANT	TREE
GAS METER	TREE STUMP
GAS VALVE	TREE-CREPE MYRTLE
GATE	TREE-PINE
GRATE INLET	WATER METER
GRATE INLET	WATER VALVE
MAIL BOX	IRRIGATION CONTROL VALVE
STORM MANHOLE	
SANITARY MANHOLE	

ABBREVIATIONS

BC – BACK OF CURB
EA – EDGE OF ASPHALT
EC – EDGE OF CONCRETE
EG – EDGE OF GRAVEL
FH – FIRE HYDRANT
FC – FENCE CORNER
LT – LIGHT POLE
MB – MAIL BOX
MH – MANHOLE
PP – POWER POLE
PP/LIGHT – POWER POLE W/LIGHT
STLT – STREET LIGHT
TRLT – TRAFFIC LIGHT
WM – WATER METER

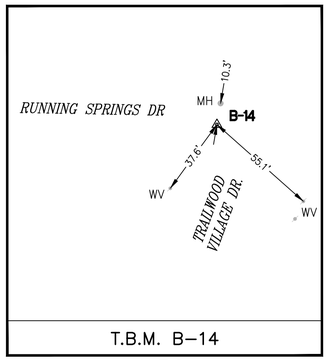

T.B.M. B-14

N.T.S.

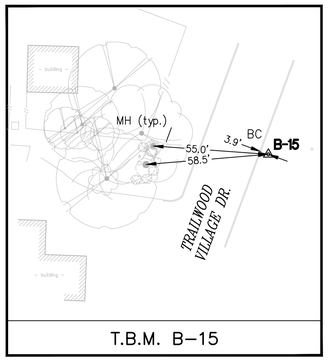

T.B.M. B-15

N.T.S.

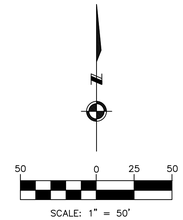

NO.	DATE	REVISION	APP.

BENCHMARK:

CITY OF HOUSTON MONUMENT 5770-7302 (ALSO FLOODPLAIN REFERENCE MARK NUMBER 070265) IS AN ALUMINUM DISK STAMPED G 103-38 BM 01 LOCATED ON SOUTH SIDEWALK ON KINGWOOD DRIVE EASTBOUND BRIDGE APPROXIMATELY 1.5 MILES EAST FROM THE INTERSECTION OF US 59 IN KEYMAP 336C IN THE SAN JACINTO RIVER WATERSHED

ELEV. 74.46 FEET NAVD 1988, 2001 ADJUSTMENT (PROJECT DATUM)
ELEV. 74.05 FEET NAVD 1988, (GEOID '18)*

* OBSERVED BY GPS SURVEYING AND PROCESSED IN REFERENCE TO THE CORS DATED MARCH 18, 2025

VERTICAL DATUM ADJUSTMENT:

THE ELEVATION DIFFERENCE IN BETWEEN THE FLOODPLAIN REFERENCE MARK'S (RM 070265)PUBLISHED DATUM NAVD 1988, 2001 ADJUSTMENT AND DATUM NAVD 1988, (GEOID '18) IS 0.41'.

NAVD 1988, 2001 ADJ. ELEVATION
=NAVD 1988 (GEOID '18) ELEVATION + 0.41 FT

NOTE:

ALL BEARINGS AND DISTANCES ARE BASED ON TEXAS STATE PLANE COORDINATE SYSTEM, SOUTH CENTRAL ZONE NO. 4204, NAD83. ALL DISTANCES ARE IN SURFACE.

THE COORDINATES SHOWN HEREON ARE TEXAS SOUTH CENTRAL ZONE NO. 4204 STATE PLANE GRID COORDINATES (NAD83) AND MAY BE BROUGHT TO SURFACE BY DIVIDING BY THE COMBINED SCALE FACTOR 0.999870017.

LEGEND:

B-X	SURVEY CONTROL POINT NUMBER
C-X	DESIGN BASELINE POINT NUMBER
⚠	SURVEY CONTROL POINT
●	DESIGN BASELINE POINT
✪	CITY OF HOUSTON MONUMENT
S. BL:	SURVEY BASELINE — — —

RPS
A TETRA TECH COMPANY
Texas PE Firm Reg. #F-929
575 N. Dairy Ashford, Suite 700,
Houston, Texas 77079
T +1 281 589 7257
E usinfrastructure@rpsgroup.com

KUO & ASSOCIATES
ENGINEERING + SURVEYING
10300 Westoffice Dr., Suite 800, Houston, Texas 77042
Tel: 713-975-8769, Fax: 713-975-0920, www.kuoassociates.com
TBPELS Firm Registration No. F-4578
TBPELS Firm Registration No. 1007560

THIS DOCUMENT IS RELEASED FOR THE PURPOSE OF INTERIM REVIEW UNDER THE AUTHORITY OF
KUTUBUL A. M. MAINUDDIN, R.P.L.S.
TEXAS REG. NO.: 6404
ON 07/24/2026
IT IS NOT TO BE USED FOR PERMIT, BIDDING OR CONSTRUCTION PURPOSES

SURVEYED BY: KUO & ASSOCIATES
FB NO. P-6420

CITY OF HOUSTON
HOUSTON PUBLIC WORKS

RECONSTRUCTION & REHABILITATION
COH LIFT STATIONS

TRAILWOOD LS

SURVEY CONTROL MAP

SC-4

WBS NUMBER	FOR CITY OF HOUSTON USE ONLY
R-000267-00178A-3	
DRAWING SCALE	
AS SHOWN	
CITY OF HOUSTON PM	
TAHA LOTIA	
SHEET NO. 12 OF 147	

LOG OF BORING LV-1

PROJECT: Lake Village Lift Station
PROJECT NO.: HG2210460.2.1.C
WBS NO.: R-000267-0178-3
LOCATION: 30.043949°; -95.228414°
COMPLETION DEPTH: 36 FT
CAVE-IN DEPTH: 20 FT
SURFACE ELEVATION: 75.0 FT
DATE: 10/21/2025

SAMPLER: Shelby Tube/Split Spoon
DRY AUGER: 0 TO 28 FT
WET ROTARY: 28 TO 36 FT

ELEVATION, FT	DEPTH, FT	SYMBOL	SAMPLES	DESCRIPTION OF MATERIAL	STANDARD PENETRATION TEST, BLOWS PER FOOT	PERCENT PASSING NO. 200 SIEVE	DRY UNIT WEIGHT, PCF	MOISTURE CONTENT, %	LIQUID LIMIT, %	PLASTIC LIMIT, %	PLASTICITY INDEX, %	UNDRAINED SHEAR STRENGTH, TSF
75	0			6.5" Concrete								
				Hard, moist, gray, brown, and reddish brown, SANDY LEAN CLAY (CL) -with gravel 0'-2' -with calcareous nodules 0'-8' -with ferous stains 0'-14'		61.4	126	9	29	11	18	4.38
70	5											
65	10											
				Very stiff to hard, moist, reddish brown, gray, and brown, LEAN CLAY (CL) -with ferrous stains 12'-22' -with calcareous nodules 12'-20'		88.5	101	20	31	22	9	
60	15											
55	20											
				Stiff to very stiff, moist, brown, gray, and reddish brown, LEAN CLAY WITH SAND (CL) -with ferrous stains 22'-28'		83.4	99	25	28	18	10	
50	25											
45	30			Hard, moist, reddish brown, brown, and gray, FAT CLAY (CH) -with calcareous nodules and ferrous stains 28'-35'		97.6	106	23	58	22	36	
40	35											

DEPTH TO WATER IN BORING:
▽ FREE WATER DURING DRILLING: 28.0 FT; AFTER 10 MIN. AT 18.0 FT
▼ WATER DEPTH 24 HOURS AFTER DRILLING: 13.6 FT

Note: Surface elevation was estimated from Topoview developed by USGS.

Drilled By: Coastal Logged By: BH HVJ Associates, Inc APPENDIX A- 1

LOG OF BORING T-1

PROJECT: Trailwood Lift Station
PROJECT NO.: HG2210460.2.1
LOCATION: 30.043942°; -95.227193°
COMPLETION DEPTH: 40 FT
CAVE-IN DEPTH: 22 FT
SURFACE ELEVATION: 74.0 FT
DATE: 10/15/2025

SAMPLER: Shelby Tube/Split Spoon
DRY AUGER: 0 TO 22 FT
WET ROTARY: 22 TO 40 FT

ELEVATION, FT	DEPTH, FT	SYMBOL	SAMPLES	DESCRIPTION OF MATERIAL	STANDARD PENETRATION TEST, BLOWS PER FOOT	PERCENT PASSING NO. 200 SIEVE	DRY UNIT WEIGHT, PCF	MOISTURE CONTENT, %	LIQUID LIMIT, %	PLASTIC LIMIT, %	PLASTICITY INDEX, %	UNDRAINED SHEAR STRENGTH, TSF
70	0			Stiff to hard, moist, dark gray, gray, and brown, SANDY LEAN CLAY (CL) -with ferrous stains 2'-26' -with calcareous nodules 2'-10'		63.9	121	7	29	12	17	5.13
65	5											
60	10											
55	15					70.5	109	20	29	17	12	
50	20			-with calcareous nodules 24'-26'								
45	25			Very stiff to hard, moist, reddish brown and gray, FAT CLAY (CH) -with ferrous stains 26'-40' -with calcareous nodules 28'-40'		94.8	107	23	58	25	33	
40	30					97.1	107	21	58	23	35	
35	35											

DEPTH TO WATER IN BORING:
▽ FREE WATER DURING DRILLING: 22.0 FT; AFTER 10 MIN. AT 19.5 FT
▼ WATER DEPTH 24 HOURS AFTER DRILLING: Not Recorded

Note: Surface elevation was estimated from Topoview developed by USGS.

Drilled By: Coastal Logged By: BH HVJ Associates, Inc APPENDIX A- 2

LOG OF BORING T-2

PROJECT: Trailwood Lift Station
PROJECT NO.: HG2210460.2.1
LOCATION: 30.043958°; -95.226773°
COMPLETION DEPTH: 40 FT
CAVE-IN DEPTH: 26.3 FT
SURFACE ELEVATION: 75.0 FT
DATE: 10/11/2025

SAMPLER: Shelby Tube/Split Spoon
DRY AUGER: 0 TO 40 FT
WET ROTARY: 0 TO 0 FT

ELEVATION, FT	DEPTH, FT	SYMBOL	SAMPLES	DESCRIPTION OF MATERIAL	STANDARD PENETRATION TEST, BLOWS PER FOOT	PERCENT PASSING NO. 200 SIEVE	DRY UNIT WEIGHT, PCF	MOISTURE CONTENT, %	LIQUID LIMIT, %	PLASTIC LIMIT, %	PLASTICITY INDEX, %	UNDRAINED SHEAR STRENGTH, TSF
75	0			Very stiff to hard, moist, gray and brown, SANDY LEAN (CL) -with roots 0'-2' -with calcareous nodules 0'-14' -with ferrous stains 0'-4'		54.1		11	31	17	14	
70	5				22							
					27							
65	10			-with ferrous stains 8'-14'		64.3	116	12	34	15	19	
60	15			Very stiff to hard, moist, gray, brown, and light brown, LEAN CLAY (CL) -with ferrous stains and calcareous nodules 14'-20'		97.1	98	23	40	25	15	
55	20			Stiff to very stiff, moist, gray and brown, FAT CLAY (CH) -with ferrous stains 20'-30'		96.1	100	24	53	21	32	
50	25					91.3	95	25	57	25	32	
45	30			Dense to very dense, wet, gray, brown, and reddish brown, SAND WITH SILT (SP-SM)	33							
					52	6.0		20	NP	NP	NP	
40	35			-with gravel 36'-38'	36							
					36							
					40	8.1		17	NP	NP	NP	

DEPTH TO WATER IN BORING:
▽ FREE WATER DURING DRILLING: 30.0 FT; AFTER 10 MIN. AT 17.2 FT
▼ WATER DEPTH 24 HOURS AFTER DRILLING: Not Recorded

Note: Surface elevation was estimated from Topoview developed by USGS.

Drilled By: Coastal Logged By: BH HVJ Associates, Inc APPENDIX A- 3

LOG OF BORING T-3

PROJECT: Trailwood Lift Station
PROJECT NO.: HG2210460.2.1
LOCATION: 30.043965°; -95.225214°
COMPLETION DEPTH: 40 FT
CAVE-IN DEPTH: 11.7 FT
SURFACE ELEVATION: 72.0 FT
DATE: 10/9/2025

SAMPLER: Shelby Tube/Split Spoon
DRY AUGER: 0 TO 20 FT
WET ROTARY: 20 TO 40 FT

ELEVATION, FT	DEPTH, FT	SYMBOL	SAMPLES	DESCRIPTION OF MATERIAL	STANDARD PENETRATION TEST, BLOWS PER FOOT	PERCENT PASSING NO. 200 SIEVE	DRY UNIT WEIGHT, PCF	MOISTURE CONTENT, %	LIQUID LIMIT, %	PLASTIC LIMIT, %	PLASTICITY INDEX, %	UNDRAINED SHEAR STRENGTH, TSF
70	0			6.75" Concrete								
				Stiff to hard, moist, dark gray and brown, LEAN WITH SAND (CL) -with ferrous stains and calcareous nodules 0.479'-2'		73.9	111	16	38	15	23	
65	5											
				Stiff to hard, moist, brown, dark gray, and light gray, FAT CLAY (CH) -with ferrous stains 8'-12' -with calcareous nodules 10'-14'		98.0	95	29	67	28	39	
60	10											
				-with ferrous stains 14'-18'		88.0	108	19	51	22	29	
55	15											
				Medium dense to dense, wet, gray, SAND WITH SILT (SP-SM)	42							
50	20				16							
					27	6.2		22	NP	NP	NP	
45	25				16							
					20							
40	30			Loose to medium dense, wet, reddish brown and gray, POORLY GRADED SAND (SP)	14	4.6		21	NP	NP	NP	
					8							
35	35			Very stiff to hard, moist, reddish brown and gray, FAT CLAY (CH)								
				-with calcareous nodules and ferrous stains 36'-38'		99.6	93	30	71	37	34	
								23				

DEPTH TO WATER IN BORING:
▽ FREE WATER DURING DRILLING: 20.0 FT; AFTER 10 MIN. AT 10.3 FT
▼ WATER DEPTH 24 HOURS AFTER DRILLING: 14.3 FT

Note: Surface elevation was estimated from Topoview developed by USGS.

Drilled By: Coastal Logged By: BH HVJ Associates, Inc APPENDIX A- 4

LOG OF BORING T-4

PROJECT: Trailwood Lift Station
PROJECT NO.: HG2210460.2.1
LOCATION: 30.045201°; -95.224902°
COMPLETION DEPTH: 40 FT
CAVE-IN DEPTH: 14.8 FT
SURFACE ELEVATION: 73.0 FT
DATE: 10/9/2025

SAMPLER: Shelby Tube/Split Spoon
DRY AUGER: 0 TO 20 FT
WET ROTARY: 20 TO 40 FT

ELEVATION, FT	DEPTH, FT	SYMBOL	SAMPLES	DESCRIPTION OF MATERIAL	STANDARD PENETRATION TEST, BLOWS PER FOOT	PERCENT PASSING NO. 200 SIEVE	DRY UNIT WEIGHT, PCF	MOISTURE CONTENT, %	LIQUID LIMIT, %	PLASTIC LIMIT, %	PLASTICITY INDEX, %	UNDRAINED SHEAR STRENGTH, TSF
70	0			6.5" Concrete								
				Stiff to hard, moist, dark gray, brown, and light gray, SANDY LEAN CLAY (CL) -with ferrous stains 0.541'-2'		54.4	115	14	37	10	27	
65	5											
				Medium dense, wet, dark gray, brown, and light gray, CLAYEY SAND (SC)		45.2		16	29	11	18	
60	10			Loose to medium dense, wet, gray, brown, and yellowish brown, SILTY SAND (SM)	25							
					18							
55	15				10	26.3		17	NP	NP	NP	
					16							
50	20				10							
					9							
45	25			Stiff, moist, dark gray, brown, and gray, LEAN CLAY (CL) -with ferrous stains 22'-26'		90.1	106	22	47	14	33	
				Medium dense, wet, dark gray, brown, and gray, SAND WITH SILT (SP-SM)	22	10.4		18	NP	NP	NP	
40	30				24							
				Very soft to very stiff, moist, dark gray, brown, and gray, LEAN CLAY WITH SAND (CL)	2	76.5		25	44	14	30	
35	35				32							
				Stiff to very stiff, moist, reddish brown and gray, FAT CLAY (CH) -with ferrous stains 34'-40' -with calcareous nodules 36'-40'		99.2	87	36	71	24	47	

DEPTH TO WATER IN BORING:
▽ FREE WATER DURING DRILLING: 20.0 FT; AFTER 10 MIN. AT 14.3 FT
▼ WATER DEPTH 24 HOURS AFTER DRILLING: Not Recorded

Note: Surface elevation was estimated from Topoview developed by USGS.

Drilled By: Coastal Logged By: BH HVJ Associates, Inc APPENDIX A- 5

LOG OF BORING T-5

PROJECT: Trailwood Lift Station
PROJECT NO.: HG2210460.2.1
LOCATION: 30.046547°; -95.224521°
COMPLETION DEPTH: 40 FT
CAVE-IN DEPTH: 0 FT
SURFACE ELEVATION: 72.0 FT
DATE: 10/10/2025

SAMPLER: Shelby Tube/Split Spoon
DRY AUGER: 0 TO 26 FT
WET ROTARY: 26 TO 40 FT

ELEVATION, FT	DEPTH, FT	SYMBOL	SAMPLES	DESCRIPTION OF MATERIAL	STANDARD PENETRATION TEST, BLOWS PER FOOT	PERCENT PASSING NO. 200 SIEVE	DRY UNIT WEIGHT, PCF	MOISTURE CONTENT, %	LIQUID LIMIT, %	PLASTIC LIMIT, %	PLASTICITY INDEX, %	UNDRAINED SHEAR STRENGTH, TSF
70	0			7.5" Concrete								
				Very stiff to hard, moist, gray, brown, and reddish brown, SANDY LEAN CLAY (CL) -with ferrous stains 0.625'-4'		52.5	126	10	33	16	17	5.1
65	5											
				Dense, wet, gray and brown, CLAYEY SAND (SC)	48	23.1		6	29	17	12	
60	10				45							
					38							
55	15				49							
				Stiff to hard, moist, dark gray, brown, and gray, LEAN CLAY (CL) -with ferrous stains 16'-22'		96.6	113	20	45	17	28	
50	20											
				Stiff, moist, gray and brown, FAT CLAY (CH) -with ferrous stains 22'-24'		94.0	102	28	66	23	43	
45	25			Medium dense to dense, wet, gray and brown, SAND WITH SILT (SP-SM)	35							
					20							
40	30				24							
				-with gravel 30'-36'	33	11.7		19	NP	NP	NP	
					38							
35	35				35			19				
					42							
				Stiff, moist, reddish brown and gray, FAT CLAY (CH)	13	88.9		35	64	33	31	

DEPTH TO WATER IN BORING:
▽ FREE WATER DURING DRILLING: 26.0 FT; AFTER 10 MIN. AT 15.6 FT
▼ WATER DEPTH 24 HOURS AFTER DRILLING: 13.7 FT

Note: Surface elevation was estimated from Topoview developed by USGS.

Drilled By: Coastal Logged By: BH HVJ Associates, Inc APPENDIX A- 6

A TETRA TECH COMPANY
Texas PE Firm Reg. #F-929
575 N. Dairy Ashford, Suite 700,
Houston, Texas 77079
T +1 281 589 7257
E usinfrastructure@rpsgroup.com

SURVEYED BY: KUO Inc.
FB NO. F-4578

This document is released for the purposes of interim review only under the authority of:

Jeremy Austin, P.E.
Texas P.E. No. 116816
09/11/2026

It is not to be used for bidding, construction, or permitting purposes.

CITY OF HOUSTON
HOUSTON PUBLIC WORKS

LIFT STATION REHABILITATION & RECONSTRUCTION

BORE LOGS (SHEET 1 OF 2)
BL-1

WBS NUMBER	FOR CITY OF HOUSTON USE ONLY
R-000267-178A-3	
DRAWING SCALE	
AS NOTED	
CITY OF HOUSTON PM	
TAHA LOTIA	
SHEET NO. 13 OF 147	

FILE PATH: C:\Users\andres.martinez\DC\ACCDocs\Tetra Tech Inc\200-317106-24001 COH LS Rehab Design\Project Files\CAD\R-000267-0178A-3_BORE LOGS.dwg PLOTTED: 9/9/2026 4:53 PM

LOG OF BORING T-6

PROJECT: Trailwood Lift Station

PROJECT NO.: HG2210460.2.1

LOCATION: 30.047462°, -95.224134°

COMPLETION DEPTH: 40 FT
CAVE-IN DEPTH: 12.3 FT
DATE: 10/10/2025

SURFACE ELEVATION: 72.0 FT

SAMPLER: Shelby Tube/Split Spoon
DRY AUGER: 0 TO 18 FT
WET ROTARY: 18 TO 40 FT

UNDRAINED SHEAR STRENGTH, TSF
○ HAND PENETROMETER
● UNCONFINED COMPRESSION
■ UNCONSOLIDATED-UNDRAINED TRIAXIAL COMPRESSION
△ TORVANE
0.5 1.0 1.5 2.0 2.5

ELEVATION, FT	DEPTH, FT	SYMBOL	SAMPLERS	DESCRIPTION OF MATERIAL	STANDARD PENETRATION TEST BLOWS PER FOOT	PERCENT PASSING NO. 200 SIEVE	DRY UNIT WEIGHT, PCF	MOISTURE CONTENT, %	LIQUID LIMIT, %	PLASTIC LIMIT, %	PLASTICITY INDEX, %
	0			6" Concrete							
70				Stiff to very stiff, moist, gray, brown, and dark gray, SANDY FAT CLAY (CH) -with ferrous stains 0.5'-8'		60.6	108	20	52	22	30
	5										
65								14			
	10			Medium dense to very dense, wet, gary, brown, and light brown, SILTY SAND (SM)	85						
60					36	24.0		12	NP	NP	NP
					27						
	15			Medium dense to dense, wet, gray and brown, SAND WITH SILT (SP-SM)	12			22			
55					13						
	20				15	10.4		22	NP	NP	NP
50					16						
					23						
	25				25	6.1		27	NP	NP	NP
45					32						
	30				36						
				Loose to very dense, wet, gray and brown, POORLY GRADED SAND (SP)	34	3.0		23	NP	NP	NP
40					48						
	35			-with gravel 34'-36'	62						
35				-with gravel 38'-40'	44	2.4		16	NP	NP	NP
	40				10						

DEPTH TO WATER IN BORING:
▽ FREE WATER DURING DRILLING: 18.0 FT; AFTER 10 MIN. AT 12.2 FT
▼ WATER DEPTH 24 HOURS AFTER DRILLING: Not Recorded

Note:
Surface elevation was estimated from Topoview developed by USGS.

Drilled By: Coastal Logged By: BH

HVJ Associates, Inc

APPENDIX A- 7

COH HG2210460.2.1.GPJ 3/16/26

FILE PATH: C:\Users\andres.martinezjr\DC\ACCDocs\Tetra Tech Inc\200-317106-24001 COH LS Rehab Design\Project Files\CAD\R-000267-178A-3_BL-2.dwg PLOTTED: 9/9/2026 4:54 PM

RPS A TETRA TECH COMPANY
Texas PE Firm Reg. #F-929
575 N. Dairy Ashford, Suite 700,
Houston, Texas 77079
T +1 281 589 7257
E usinfrastructure@rpsgroup.com

SURVEYED BY: KUO Inc.
FB NO. F-4578

This document is released for the purposes of interim review only under the authority of:

Jeremy Austin, P.E.
Texas P.E. No. 116816
09/11/2026

It is not to be used for bidding, construction, or permitting purposes.

CITY OF HOUSTON
HOUSTON PUBLIC WORKS

LIFT STATION REHABILITATION & RECONSTRUCTION

BORE LOGS (SHEET 2 OF 2)
BL-2

WBS NUMBER	FOR CITY OF HOUSTON USE ONLY
R-000267-178A-3	
DRAWING SCALE	
AS NOTED	
CITY OF HOUSTON PM	
TAHA LOTIA	
SHEET NO. 14 OF 147	

National Flood Hazard Layer FIRMette

FEMA

95°13'43"W 30°3'17"N

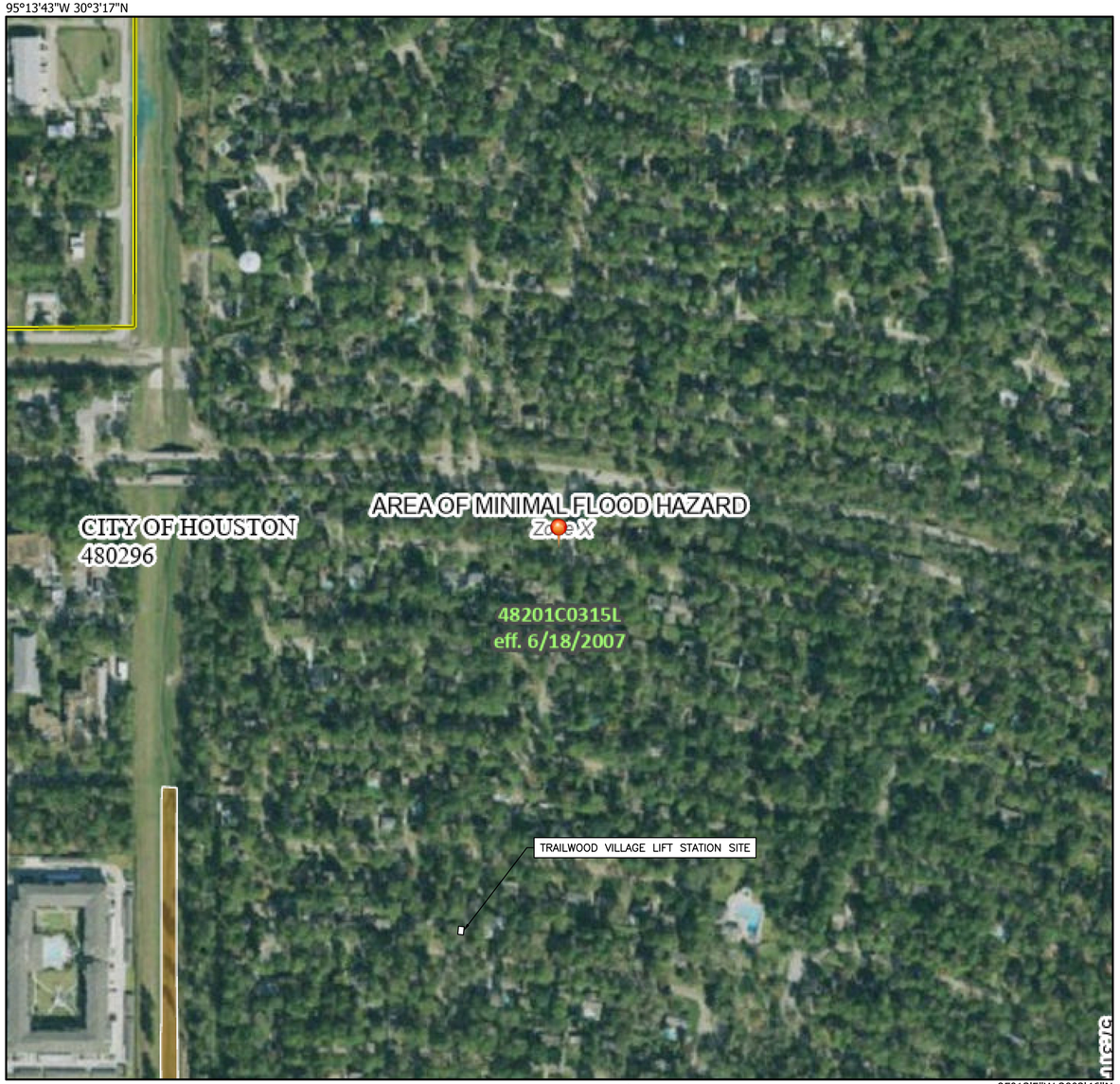

95°13'5"W 30°2'46"N

0 250 500 1,000 1,500 2,000 Feet

1:6,000

Basemap Imagery Source: USGS National Map 2023

Legend

SEE FIS REPORT FOR DETAILED LEGEND AND INDEX MAP FOR FIRM PANEL LAYOUT

SPECIAL FLOOD HAZARD AREAS
- Without Base Flood Elevation (BFE) *Zone A, V, A99*
- With BFE or Depth *Zone AE, AO, AH, VE, AR*
- Regulatory Floodway

OTHER AREAS OF FLOOD HAZARD
- 0.2% Annual Chance Flood Hazard, Areas of 1% annual chance flood with average depth less than one foot or with drainage areas of less than one square mile *Zone X*
- Future Conditions 1% Annual Chance Flood Hazard *Zone X*
- Area with Reduced Flood Risk due to Levee. See Notes. *Zone X*
- Area with Flood Risk due to Levee *Zone D*

OTHER AREAS
- NO SCREEN Area of Minimal Flood Hazard *Zone X*
- Effective LOMRs
- Area of Undetermined Flood Hazard *Zone D*

GENERAL STRUCTURES
- Channel, Culvert, or Storm Sewer
- Levee, Dike, or Floodwall

OTHER FEATURES
- B 20.2 17.5 Cross Sections with 1% Annual Chance Water Surface Elevation
- 8 Coastal Transect
- 513 Base Flood Elevation Line (BFE)
- Limit of Study
- Jurisdiction Boundary
- Coastal Transect Baseline
- Profile Baseline
- Hydrographic Feature

MAP PANELS
- Digital Data Available
- No Digital Data Available
- Unmapped

N

The pin displayed on the map is an approximate point selected by the user and does not represent an authoritative property location.

This map complies with FEMA's standards for the use of digital flood maps if it is not void as described below. The basemap shown complies with FEMA's basemap accuracy standards

The flood hazard information is derived directly from the authoritative NFHL web services provided by FEMA. This map was exported on 7/31/2024 at 1:59 PM and does not reflect changes or amendments subsequent to this date and time. The NFHL and effective information may change or become superseded by new data over time.

This map image is void if the one or more of the following map elements do not appear: basemap imagery, flood zone labels, legend, scale bar, map creation date, community identifiers, FIRM panel number, and FIRM effective date. Map images for unmapped and unmodernized areas cannot be used for regulatory purposes.

rps A TETRA TECH COMPANY
Texas PE Firm Reg. #F-929
575 N. Dairy Ashford, Suite 700, Houston, Texas 77079
T +1 281 589 7257
E usinfrastructure@rpsgroup.com

This document is released for the purposes of interim review only under the authority of:

Neha Raval, P.E.
Texas P.E. No. 141506
09/11/2026

It is not to be used for bidding, construction, or permitting purposes.

SURVEYED BY: KUO Inc.
FB NO. F-4578

CITY OF HOUSTON
HOUSTON PUBLIC WORKS

LIFT STATION REHABILITATION & RECONSTRUCTION

FIRMETTE
TRAILWOOD VILLAGE LIFT STATION
NATIONAL FLOOD HAZARD
LAYER FIRMETTE MAP
TV-FC-1

WBS NUMBER	FOR CITY OF HOUSTON USE ONLY
R-000267-178A-3	
DRAWING SCALE	
AS NOTED	
CITY OF HOUSTON PM	
TAHA LOTIA	
SHEET NO. 15 OF 147	

FILE PATH: C:\Users\andres.martinezjr\DC\ACCDocs\Tetra Tech Inc\200-317106-24001 COH LS Rehab Design\Project Files\CAD\R-000267-178A-3\Sheet Files\FEMA\FEMA 2026.dwg PLOTTED: 9/9/2026 4:54 PM

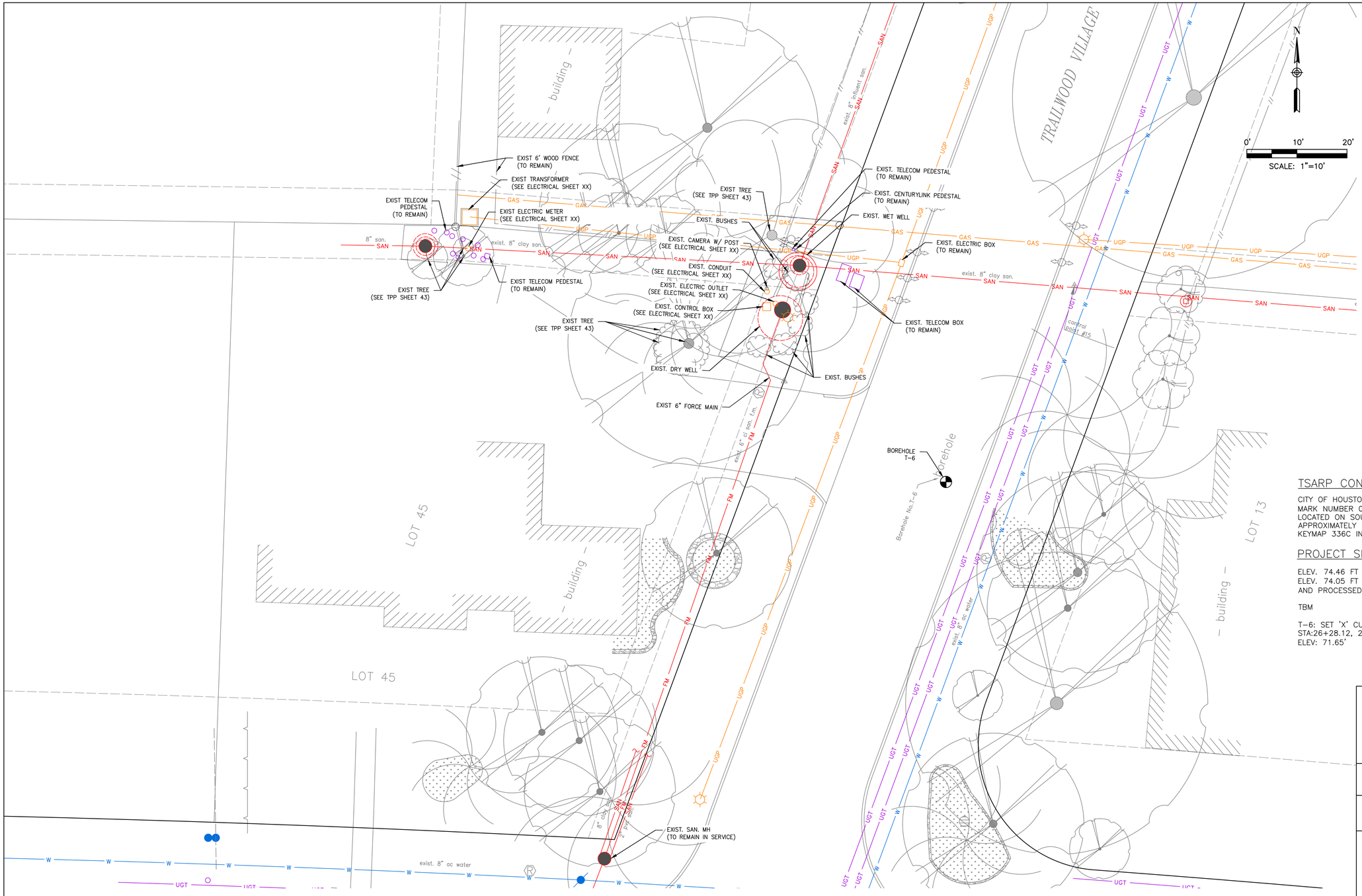

NOTES:

1. CONTRACTOR TO PREPARE BYPASS PLAN AND SUBMIT FOR REVIEW.
2. CONTRACTOR TO REMOVE AND SALVAGE ALL THE EXISTING PUMP, VALVES AND APPURENTANACES.
3. CONTRACTOR TO FIELD VERITY EXISTING CONDITIONS PRIOR TO ANY DEMOLITION WORK, REPORT ANY DISCREPANCIES TO THE ENGINEER.
4. CONSULT WITH ENGINEER FOR PHASES OR SEQUENCES OF DEMOLITION.
5. REMOVE AND SALVAGE EXISTING PUMPS, MOTORS, VALVES, PIPING, AND FITTINGS. SALVAGED ITEMS SHALL BE DELIVERED AS DIRECTED BY THE CITY OF HOUSTON MAINTENANCE OFFICE.
6. WET WELL STEEL CAN MUST BE REMOVED AND DISPOSED OF IN ITS ENTIRETY.
7. DEMOLISHED WET WELL SHALL BE COMPLETELY FILLED WITH ACCEPTABLE FLOWABLE FILL THAT FOLLOWS COH SPECIFICATION AND APPROVED BY THE ENGINEER.
8. CLEAN EXISTING WET WELL OF ACCUMULATED SLUDGE. CONTRACTOR SHALL DISPOSE ALL DEMOLISHED DEBRIS AND SLUDGE IN ACCORDANCE WITH THE CITY OF HOUSTON STANDARDS.
9. CONTRACTOR SHALL RETAIN A QUALIFIED AND LICENSED ENVIRONMENTAL PROFESSIONAL TO PERFORM COMPREHENSIVE LEAD-BASED PAINT AND ASBESTOS-CONTAINING MATERIAL SURVEYS PRIOR TO INITIATION OF ANY ABANDONMENT ACTIVITIES AT THIS LIFT STATION (LS). ALL WORK SHALL BE CONDUCTED IN ACCORDANCE WITH APPLICABLE FEDERAL, STATE, AND LOCAL REGULATIONS, AND SURVEY RESULTS SHALL BE SUBMITTED FOR REVIEW AND APPROVAL BY ENGINEER BEFORE PROCEEDING AND DISPOSE OFF PER CITY STANDARDS.
10. PER GEOTECH REPORT PREPARED BY HVJ INC, THE GROUND WATER WAS ENCOUNTERED AT 30 FT AND AFTER 10 MINUTES AT 17.2-FT BELOW GROUND.

TSARP CONVERSION REFERENCE MONUMENT

CITY OF HOUSTON MONUMENT 5770-7302 (ALSO FLOODPLAIN REFERENCE MARK NUMBER 070265) IS AN ALUMINUM DISK STAMPED G 103-38 BM 01 LOCATED ON SOUTH SIDEWALK ON KINGWOOD DRIVE EASTBOUND BRIDGE APPROXIMATELY 1.5 MILES EAST FROM THE INTERSECTION OF US 59 IN KEYMAP 336C IN THE SAN JACINTO RIVER WATERSHED.

PROJECT SITE MONUMENT

ELEV. 74.46 FT (NAVD 1988, 2001 ADJ. – PROJECT DATUM)
ELEV. 74.05 FT (NAVD 1988, (GEOID '18) – OBSERVED BY GPS SURVEYING AND PROCESSED IN REFERENCE TO THE CORS DATED MARCH 18, 2025)

TBM

T-6: SET 'X' CUT ON CONC.,
STA:26+28.12, 20.50LT
ELEV: 71.65'

EXISTING UTILITY NOTE:

EXISTING UNDERGROUND UTILITY INFORMATION (TYPE. SIZE & OWNERSHIP) ARE APPROXIMATELY BASE ON THE AVAILABLE RECORD DRAWINGS AND FIELD VERIFICATION (WHERE FEASIBLE) WITHOUT PROBING AND EXCAVATION. NO WARRANTY IS MADE AS TO THE ACCURACY OR COMPLETENESS OF UTILITY LOCATION SHOWN ON THE DRAWING. CAUTION SHOULD BE EXERCISED WHEN EXCAVATING OR BORE AND JACKING IN THE VICINITY OF UNDERGROUND UTILITIES. OWNERS OF THE UTILITIES SHOULD BE NOTIFIED PRIOR TO SUCH ACTIVITIES. CALL UTILITY COORDINATING COMMITTEE AT 713-2223-4567. AT LEAST 48 HOURS PRIOR TO EXCAVATING IN THE STREET RIGHT-OF-WAY.

DEMOLITION NOTE:

WHEN MEASURED FROM THE PROPERTY LINE OF ANY NEARBY RESIDENTIAL PROPERTY. ANY SOUND PRODUCED BY THE ERECTION, EXCAVATION, CONSTRUCTION, OR DEMOLITION OF ANY STRUCTURE. INCLUDING THE USE OF TOOLS OR EQUIPMENT (CONDUCTED BETWEEN THE HOURS OF 7 A.M. ABD 8 P.M. SHALL NOT EXCEED 85 DB(A).

RIGHT OF REFUSAL NOTE:

SALVAGED MATERIAL AND EQUIPMENT LISTED HEREINAFTER SHALL BECOME THE PROPERTY OF THE CITY OF HOUSTON UNLESS OTHERWISE DESIGNATED IN WRITING. THE CITY OF HOUSTON SHALL HAVE FIRST REFUSAL RIGHTS TO RETAIN ALL ITEMS SHOWN TO BE DEMOLISHED AND/OR REMOVED IN THE DRAWINGS PRIOR TO INITIATING DEMOLITION. THE CONTRACTOR AND THE CITY OF HOUSTON PROJECT MANAGER SHALL MAKE A JOINT INSPECTION TO IDENTITY ALL ITEMS TO BE RETAINED BY THE CITY OF HOUSTON. THE CONTRACTOR SHALL RELOCATED AND STORE ITEMS, TO BE RETAINED BY THE CITY OF HOUSTON, WHERE DIRECTED ONSITE OR OFFSITE.

RPS A TETRA TECH COMPANY
Texas PE Firm Reg. #F-929
575 N. Dairy Ashford, Suite 700,
Houston, Texas 77079
T +1 281 589 7257
E usinfrastructure@rpsgroup.com

SURVEYED BY: KUO Inc.
FB NO. F-4578

This document is released for the purposes of interim review only under the authority of:

Neha Raval, P.E.
Texas P.E. No. 141506
09/11/2026

It is not to be used for bidding, construction, or permitting purposes.

CITY OF HOUSTON
HOUSTON PUBLIC WORKS

LIFT STATION REHABILITATION & RECONSTRUCTION

EXISTING SITE PLAN – TRAILWOOD VILLAGE LS
TV-C-1

WBS NUMBER	FOR CITY OF HOUSTON USE ONLY
R-000267-178A-3	
DRAWING SCALE	
AS NOTED	
CITY OF HOUSTON PM	
TAHA LOTIA	
SHEET NO. 16 OF 147	

FILE PATH: C:\Users\andres.martinezjr\DC\ACCDocs\Tetra Tech Inc\200-317106-24001 COH LS Rehab Design\Project Files\CAD\R-000267-01(2026 4:24:14 PM) TRAILWOOD VILLAGE LS.dwg

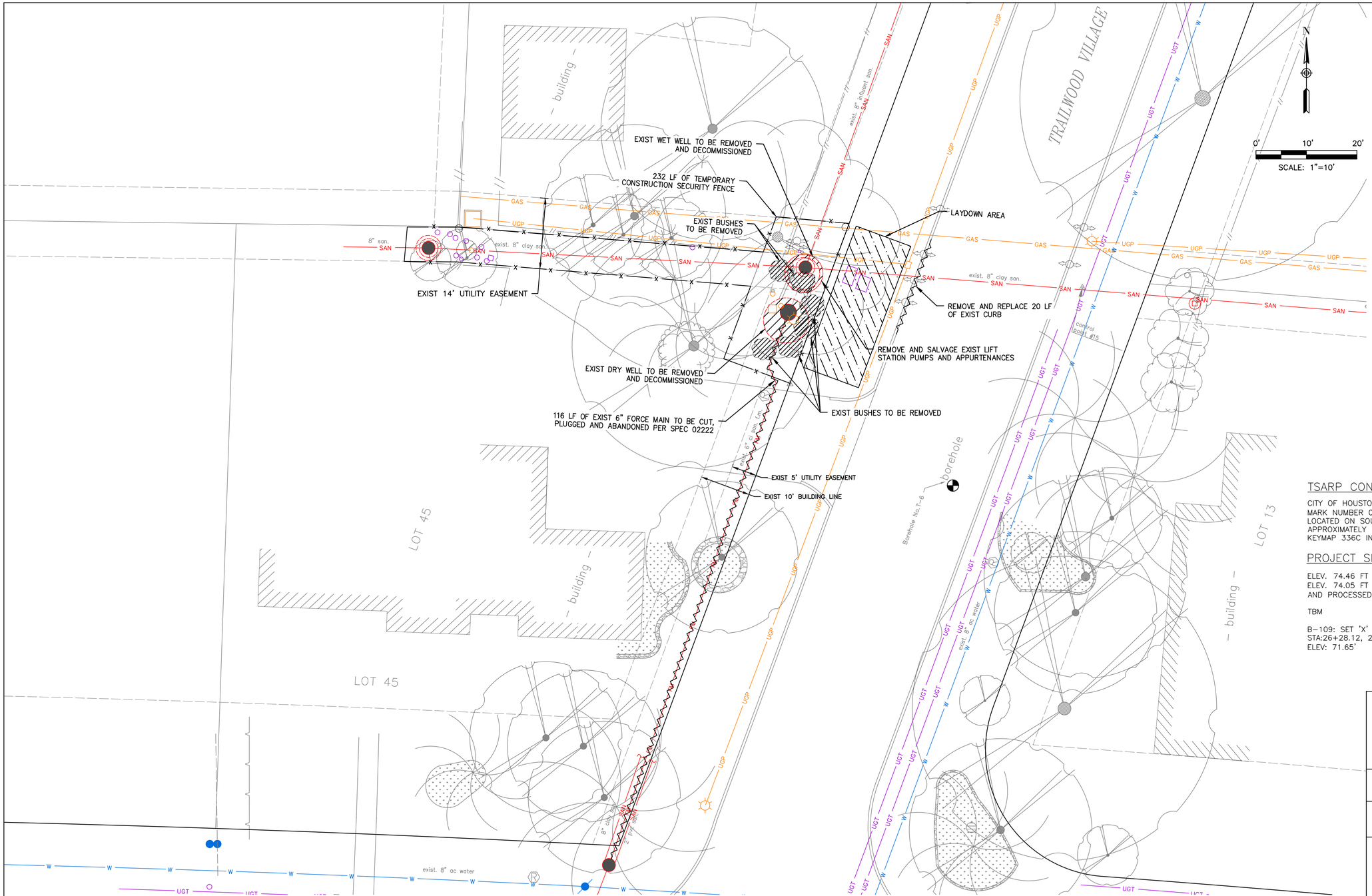

NOTES:

1. CONTRACTOR TO PREPARE BYPASS PLAN AND SUBMIT FOR REVIEW.
2. CONTRACTOR TO REMOVE AND SALVAGE ALL THE EXISTING PUMP, VALVES AND APPURENTANACES.
3. CONTRACTOR TO FIELD VERITY EXISTING CONDITIONS PRIOR TO ANY DEMOLITION WORK, REPORT ANY DISCREPANCIES TO THE ENGINEER.
4. CONSULT WITH ENGINEER FOR PHASES OR SEQUENCES OF DEMOLITION.
5. REMOVE AND SALVAGE EXISTING PUMPS, MOTORS, VALVES, PIPING, AND FITTINGS. SALVAGED ITEMS SHALL BE DELIVERED AS DIRECTED BY THE CITY OF HOUSTON MAINTENANCE OFFICE.
6. WET WELL STEEL CAN MUST BE REMOVED AND DISPOSED OF IN ITS ENTIRETY.
7. DEMOLISHED WET WELL SHALL BE COMPLETELY FILLED WITH ACCEPTABLE FLOWABLE FILL THAT FOLLOWS COH SPECIFICATION AND APPROVED BY THE ENGINEER.
8. CLEAN EXISTING WET WELL OF ACCUMULATED SLUDGE. CONTRACTOR SHALL DISPOSE ALL DEMOLISHED DEBRIS AND SLUDGE IN ACCORDANCE WITH THE CITY OF HOUSTON STANDARDS.
9. CONTRACTOR SHALL RETAIN A QUALIFIED AND LICENSED ENVIRONMENTAL PROFESSIONAL TO PERFORM COMPREHENSIVE LEAD-BASED PAINT AND ASBESTOS-CONTAINING MATERIAL SURVEYS PRIOR TO INITIATION OF ANY ABANDONMENT ACTIVITIES AT THIS LIFT STATION (LS). ALL WORK SHALL BE CONDUCTED IN ACCORDANCE WITH APPLICABLE FEDERAL, STATE, AND LOCAL REGULATIONS, AND SURVEY RESULTS SHALL BE SUBMITTED FOR REVIEW AND APPROVAL BY ENGINEER BEFORE PROCEEDING AND DISPOSE OFF PER CITY STANDARDS.
10. PER GEOTECH REPORT PREPARED BY HVJ INC, THE GROUND WATER WAS ENCOUNTERED AT 30 FT AND AFTER 10 MINUTES AT 17.2-FT BELOW GROUND.

TSARP CONVERSION REFERENCE MONUMENT

CITY OF HOUSTON MONUMENT 5770-7302 (ALSO FLOODPLAIN REFERENCE MARK NUMBER 070265) IS AN ALUMINUM DISK STAMPED G 103-38 BM 01 LOCATED ON SOUTH SIDEWALK ON KINGWOOD DRIVE EASTBOUND BRIDGE APPROXIMATELY 1.5 MILES EAST FROM THE INTERSECTION OF US 59 IN KEYMAP 336C IN THE SAN JACINTO RIVER WATERSHED.

PROJECT SITE MONUMENT

ELEV. 74.46 FT (NAVD 1988, 2001 ADJ. – PROJECT DATUM)
ELEV. 74.05 FT (NAVD 1988, (GEOID '18) – OBSERVED BY GPS SURVEYING AND PROCESSED IN REFERENCE TO THE CORS DATED MARCH 18, 2025)

TBM

B-109: SET 'X' CUT ON CONC.,
STA:26+28.12, 20.50LT
ELEV: 71.65'

EXISTING UTILITY NOTE:

EXISTING UNDERGROUND UTILITY INFORMATION (TYPE. SIZE & OWNERSHIP) ARE APPROXIMATELY BASE ON THE AVAILABLE RECORD DRAWINGS AND FIELD VERIFICATION (WHERE FEASIBLE) WITHOUT PROBING AND EXCAVATION. NO WARRANTY IS MADE AS TO THE ACCURACY OR COMPLETENESS OF UTILITY LOCATION SHOWN ON THE DRAWING. CAUTION SHOULD BE EXERCISED WHEN EXCAVATING OR BORE AND JACKING IN THE VICINITY OF UNDERGROUND UTILITIES. OWNERS OF THE UTILITIES SHOULD BE NOTIFIED PRIOR TO SUCH ACTIVITIES. CALL UTILITY COORDINATING COMMITTEE AT 713-2223-4567. AT LEAST 48 HOURS PRIOR TO EXCAVATING IN THE STREET RIGHT-OF-WAY.

DEMOLITION NOTE:

WHEN MEASURED FROM THE PROPERTY LINE OF ANY NEARBY RESIDENTIAL PROPERTY. ANY SOUND PRODUCED BY THE ERECTION, EXCAVATION, CONSTRUCTION, OR DEMOLITION OF ANY STRUCTURE. INCLUDING THE USE OF TOOLS OR EQUIPMENT (CONDUCTED BETWEEN THE HOURS OF 7 A.M. ABD 8 P.M. SHALL NOT EXCEED 85 DB(A).

RIGHT OF REFUSAL NOTE:

SALVAGED MATERIAL AND EQUIPMENT LISTED HEREINAFTER SHALL BECOME THE PROPERTY OF THE CITY OF HOUSTON UNLESS OTHERWISE DESIGNATED IN WRITING. THE CITY OF HOUSTON SHALL HAVE FIRST REFUSAL RIGHTS TO RETAIN ALL ITEMS SHOWN TO BE DEMOLISHED AND/OR REMOVED IN THE DRAWINGS PRIOR TO INITIATING DEMOLITION. THE CONTRACTOR AND THE CITY OF HOUSTON PROJECT MANAGER SHALL MAKE A JOINT INSPECTION TO IDENTITY ALL ITEMS TO BE RETAINED BY THE CITY OF HOUSTON. THE CONTRACTOR SHALL RELOCATED AND STORE ITEMS, TO BE RETAINED BY THE CITY OF HOUSTON, WHERE DIRECTED ONSITE OR OFFSITE.

RPS
A TETRA TECH COMPANY
Texas PE Firm Reg. #F-929
575 N. Dairy Ashford, Suite 700,
Houston, Texas 77079
T +1 281 589 7257
E usinfrastructure@rpsgroup.com

SURVEYED BY: KUO Inc.
FB NO. F-4578

This document is released for the purposes of interim review only under the authority of:

Neha Raval, P.E.
Texas P.E. No. 141506
09/11/2026

It is not to be used for bidding, construction, or permitting purposes.

CITY OF HOUSTON
HOUSTON PUBLIC WORKS

LIFT STATION REHABILITATION & RECONSTRUCTION

DEMOLITION SITE PLAN – TRAILWOOD VILLAGE LS TV-C-2

WBS NUMBER	FOR CITY OF HOUSTON USE ONLY
R-000267-178A-3	
DRAWING SCALE	
AS NOTED	
CITY OF HOUSTON PM	
TAHA LOTIA	
SHEET NO. 17 OF 147	

FILE PATH: C:\Users\andres.martinezjr\DC\ACCDocs\Tetra Tech Inc\200-317106-24001 COH LS Rehab Design\Project Files\CAD\R-000267-178A-3-TV-C-2 DEMOLITION SITE PLAN - TRAILWOOD VILLAGE LS.dwg
9/11/2026 4:24:41 PM

National Flood Hazard Layer FIRMette

FEMA

95°14'2"W 30°2'53"N

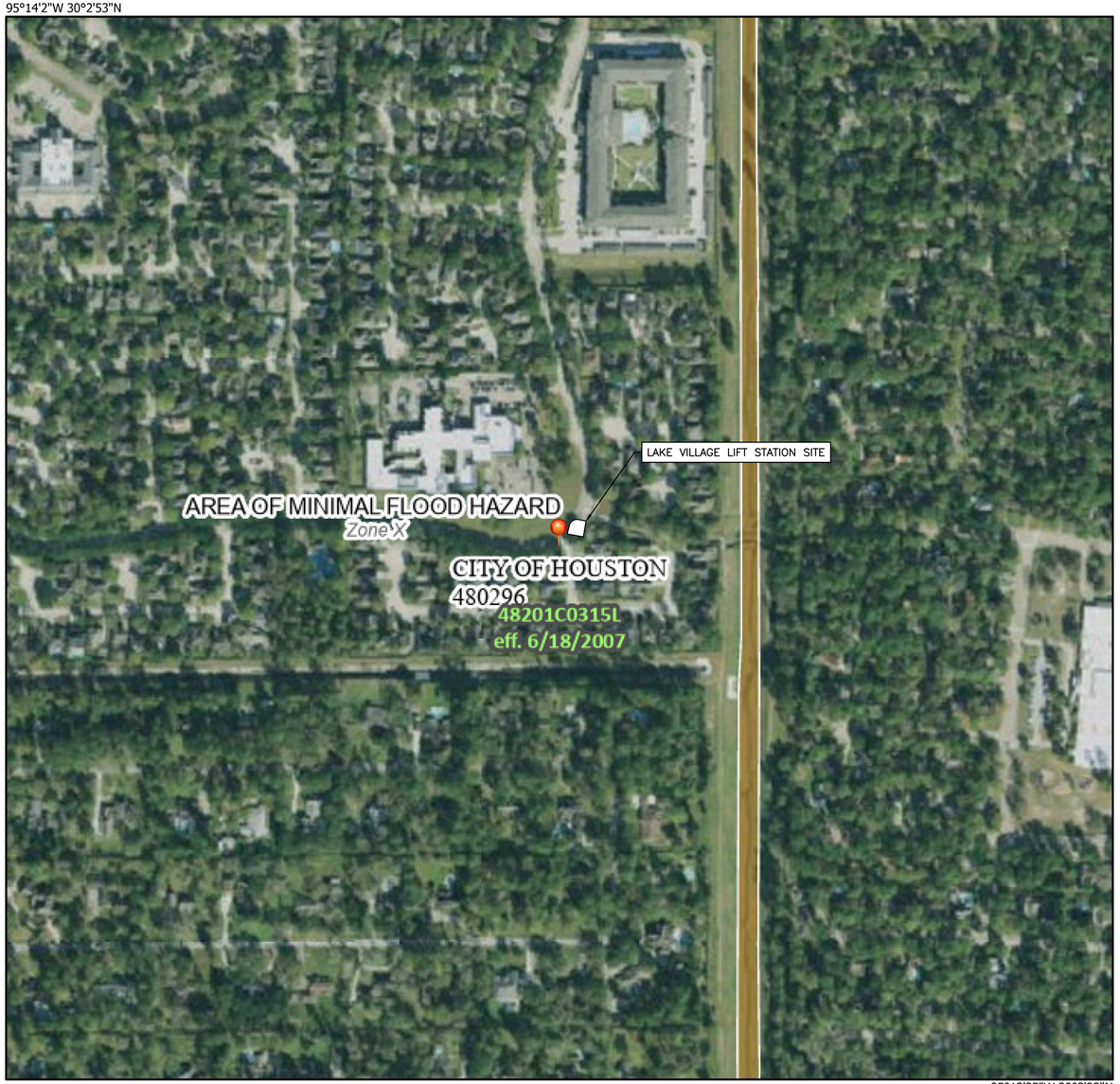

95°13'25"W 30°2'22"N

0 250 500 1,000 1,500 2,000 Feet

1:6,000

Basemap Imagery Source: USGS National Map 2023

Legend

SEE FIS REPORT FOR DETAILED LEGEND AND INDEX MAP FOR FIRM PANEL LAYOUT

SPECIAL FLOOD HAZARD AREAS
- Without Base Flood Elevation (BFE) *Zone A, V, A99*
- With BFE or Depth *Zone AE, AO, AH, VE, AR*
- Regulatory Floodway

OTHER AREAS OF FLOOD HAZARD
- 0.2% Annual Chance Flood Hazard, Areas of 1% annual chance flood with average depth less than one foot or with drainage areas of less than one square mile *Zone X*
- Future Conditions 1% Annual Chance Flood Hazard *Zone X*
- Area with Reduced Flood Risk due to Levee. See Notes. *Zone X*
- Area with Flood Risk due to Levee *Zone D*

OTHER AREAS
- NO SCREEN Area of Minimal Flood Hazard *Zone X*
- Effective LOMRs
- Area of Undetermined Flood Hazard *Zone D*

GENERAL STRUCTURES
- Channel, Culvert, or Storm Sewer
- Levee, Dike, or Floodwall

OTHER FEATURES
- B 20.2 17.5 Cross Sections with 1% Annual Chance Water Surface Elevation
- 8 Coastal Transect
- 513 Base Flood Elevation Line (BFE)
- Limit of Study
- Jurisdiction Boundary
- Coastal Transect Baseline
- Profile Baseline
- Hydrographic Feature

MAP PANELS
- Digital Data Available
- No Digital Data Available
- Unmapped

N

The pin displayed on the map is an approximate point selected by the user and does not represent an authoritative property location.

This map complies with FEMA's standards for the use of digital flood maps if it is not void as described below. The basemap shown complies with FEMA's basemap accuracy standards

The flood hazard information is derived directly from the authoritative NFHL web services provided by FEMA. This map was exported on 7/31/2024 at 1:47 PM and does not reflect changes or amendments subsequent to this date and time. The NFHL and effective information may change or become superseded by new data over time.

This map image is void if the one or more of the following map elements do not appear: basemap imagery, flood zone labels, legend, scale bar, map creation date, community identifiers, FIRM panel number, and FIRM effective date. Map images for unmapped and unmodernized areas cannot be used for regulatory purposes.

rps
A TETRA TECH COMPANY
Texas PE Firm Reg. #F-929
575 N. Dairy Ashford, Suite 700,
Houston, Texas 77079
T +1 281 589 7257
E usinfrastructure@rpsgroup.com

This document is released for the purposes of interim review only under the authority of:

Neha Raval, P.E.
Texas P.E. No. 141506
09/11/2026

It is not to be used for bidding, construction, or permitting purposes.

SURVEYED BY: KUO Inc.
FB NO. F-4578

CITY OF HOUSTON
HOUSTON PUBLIC WORKS

LIFT STATION REHABILITATION & RECONSTRUCTION

FIRMETTE
LAKE VILLAGE LIFT STATION
NATIONAL FLOOD HAZARD
LAYER FIRMETTE MAP
LV-FC-1

WBS NUMBER	FOR CITY OF HOUSTON USE ONLY
R-000267-178A-3	
DRAWING SCALE	
AS NOTED	
CITY OF HOUSTON PM	
TAHA LOTIA	
SHEET NO. 18 OF 147	

FILE PATH: C:\Users\andres.martinezjr\DC\ACCDocs\Tetra Tech Inc\200-317106-24001 COH LS Rehab Design\Project Files\CAD\R-000267-178A-3\Sheet Files\FEMA\FEMA.dwg PLOTTED: 9/9/2026 4:54 PM

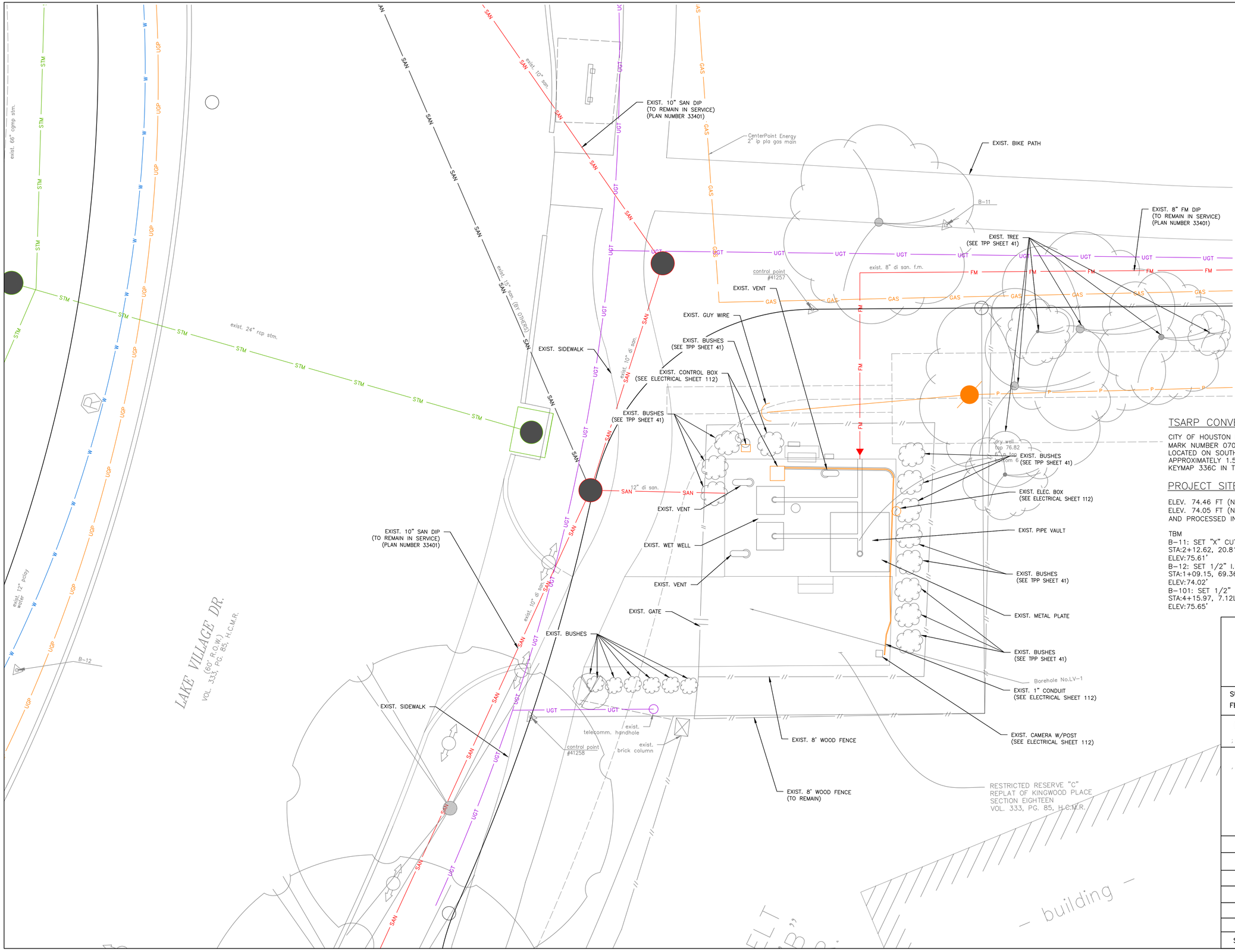

NOTES:

1. CONTRACTOR TO PREPARE BYPASS PLAN AND SUBMIT FOR REVIEW BEFORE DEMOLITION.
2. CONTRACTOR TO REMOVE AND SALVAGE ALL THE EXISTING PUMP, VALVES AND APPURENTANACES.
3. MATERIALS TO BE PLACED AWAY FROM DRIVEWAYS AND ACCESS TO PRIVATE PROPERTIES WITHIN ROW.
4. ALL FORCE MAIN BENDS AND FITTINGS MUST BE MECHANICALLY RESTRAINED OR ENCASED.
5. ALL NEW SANITARY SEWER, MANHOLES, AND FORCEMAIN TO BE INSTALLED VIA OPEN CUT UNLESS OTHERWISE SPECIFIED. FOR PVC PIPE INSTALLED BY TRENCHLESS METHODS, PROVIDE INTEGRAL RESTRAINED JOINTS AND PULL PIPE THROUGH HOLE OR CASING. FOR PVC PIPE PUSHED THROUGH HOLE OR CASING, PROVIDE APPROVED BELL INSERTION PROTECTION SYSTEM.
6. ALL PROPOSED SANITARY SEWER MANHOLES TO BE FLUSHED WITH ROADWAY PAVEMENT.
7. PER GEOTECH REPORT PREPARED BY HVJ INC, THE GROUND WATER WAS ENCOUNTERED AT 28-FT AND AFTER 10 MINUTES AT 17.2-FT BELOW GROUND.

TSARP CONVERSION REFERENCE MONUMENT

CITY OF HOUSTON MONUMENT 5770-7302 (ALSO FLOODPLAIN REFERENCE MARK NUMBER 070265) IS AN ALUMINUM DISK STAMPED G 103-38 BM 01 LOCATED ON SOUTH SIDEWALK ON KINGWOOD DRIVE EASTBOUND BRIDGE APPROXIMATELY 1.5 MILES EAST FROM THE INTERSECTION OF US 59 IN KEYMAP 336C IN THE SAN JACINTO RIVER WATERSHED.

PROJECT SITE MONUMENT

ELEV. 74.46 FT (NAVD 1988, 2001 ADJ. – PROJECT DATUM)
ELEV. 74.05 FT (NAVD 1988, (GEOID '18) – OBSERVED BY GPS SURVEYING AND PROCESSED IN REFERENCE TO THE CORS DATED MARCH 18, 2025)

TBM
B-11: SET "X" CUT ON CONC,
STA:2+12.62, 20.81RT
ELEV:75.61'
B-12: SET 1/2" I.R. W/CAP,
STA:1+09.15, 69.36RT
ELEV:74.02'
B-101: SET 1/2" I.R. W/CAP,
STA:4+15.97, 7.12LT
ELEV:75.65'

TPS
A TETRA TECH COMPANY
Texas PE Firm Reg. #F-929
575 N. Dairy Ashford, Suite 700,
Houston, Texas 77079
T +1 281 589 7257
E usinfrastructure@rpsgroup.com

SURVEYED BY: KUO Inc.
FB NO. F-4578

This document is released for the purposes of interim review only under the authority of:

Neha Raval, P.E.
Texas P.E. No. 141506
09/11/2026

It is not to be used for bidding, construction, or permitting purposes.

CITY OF HOUSTON
HOUSTON PUBLIC WORKS

LIFT STATION REHABILITATION & RECONSTRUCTION

EXISTING SITE PLAN –
LAKE VILLAGE LS
LV-C-1

WBS NUMBER	FOR CITY OF HOUSTON USE ONLY
R-000267-178A-3	
DRAWING SCALE	
AS NOTED	
CITY OF HOUSTON PM	
TAHA LOTIA	
SHEET NO. 19 OF 147	

FILE PATH: C:\Users\andres.martinezjr\DC\ACCDocs\Tetra Tech Inc\200-317106-24001 COH LS Rehab Design\Project Files\CAD\R-000267-178A-3_LV_EXISTING SITE PLAN PLOTTED:09/10/2025 04:54 PM

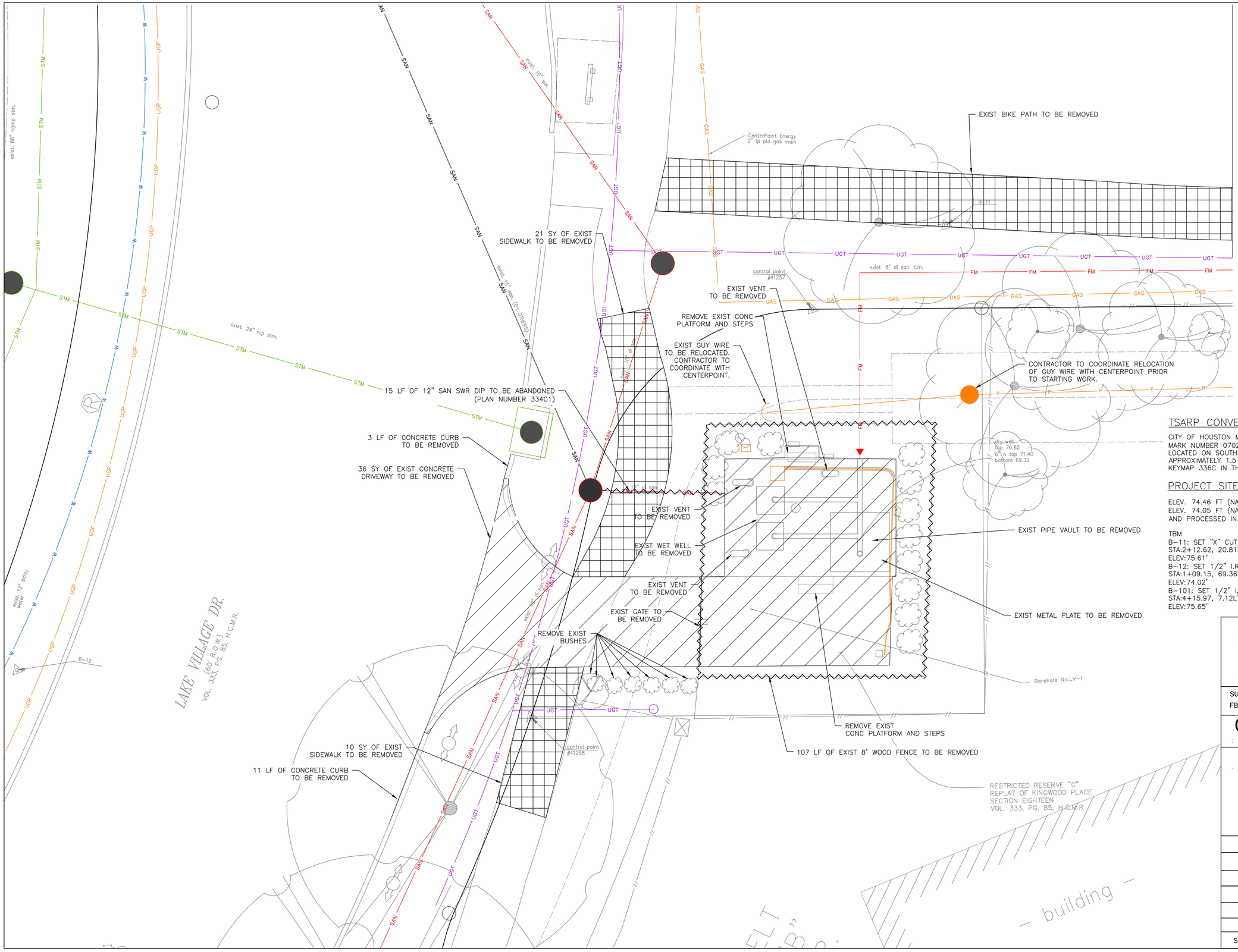

N

0' 5' 10'

SCALE: 1"=5'

NOTES:

1. CONTRACTOR TO PREPARE BYPASS PLAN AND SUBMIT FOR REVIEW BEFORE DEMOLITION.
2. CONTRACTOR TO REMOVE AND SALVAGE ALL THE EXISTING PUMP, VALVES AND APPURENTANACES.
3. MATERIALS TO BE PLACED AWAY FROM DRIVEWAYS AND ACCESS TO PRIVATE PROPERTIES WITHIN ROW.
4. ALL FORCE MAIN BENDS AND FITTINGS MUST BE MECHANICALLY RESTRAINED OR ENCASED.
5. ALL NEW SANITARY SEWER, MANHOLES, AND FORCEMAIN TO BE INSTALLED VIA OPEN CUT UNLESS OTHERWISE SPECIFIED. FOR PVC PIPE INSTALLED BY TRENCHLESS METHODS, PROVIDE INTEGRAL RESTRAINED JOINTS AND PULL PIPE THROUGH HOLE OR CASING. FOR PVC PIPE PUSHED THROUGH HOLE OR CASING, PROVIDE APPROVED BELL INSERTION PROTECTION SYSTEM.
6. ALL PROPOSED SANITARY SEWER MANHOLES TO BE FLUSHED WITH ROADWAY PAVEMENT.
7. PER GEOTECH REPORT PREPARED BY HVJ INC, THE GROUND WATER WAS ENCOUNTERED AT 28-FT AND AFTER 10 MINUTES AT 17.2-FT BELOW GROUND.

TSARP CONVERSION REFERENCE MONUMENT

CITY OF HOUSTON MONUMENT 5770-7302 (ALSO FLOODPLAIN REFERENCE MARK NUMBER 070265) IS AN ALUMINUM DISK STAMPED G 103-38 BM 01 LOCATED ON SOUTH SIDEWALK ON KINGWOOD DRIVE EASTBOUND BRIDGE APPROXIMATELY 1.5 MILES EAST FROM THE INTERSECTION OF US 59 IN KEYMAP 336C IN THE SAN JACINTO RIVER WATERSHED.

PROJECT SITE MONUMENT

ELEV. 74.46 FT (NAVD 1988, 2001 ADJ. – PROJECT DATUM)
ELEV. 74.05 FT (NAVD 1988, (GEOID '18) – OBSERVED BY GPS SURVEYING AND PROCESSED IN REFERENCE TO THE CORS DATED MARCH 18, 2025)

TBM
B-11: SET "X" CUT ON CONC,
STA:2+12.62, 20.81RT
ELEV:75.61'
B-12: SET 1/2" I.R. W/CAP,
STA:1+09.15, 69.36RT
ELEV:74.02'
B-101: SET 1/2" I.R. W/CAP,
STA:4+15.97, 7.12LT
ELEV:75.65'

RPS
A TETRA TECH COMPANY
Texas PE Firm Reg. #F-929
575 N. Dairy Ashford, Suite 700,
Houston, Texas 77079
T +1 281 589 7257
E usinfrastructure@rpsgroup.com

SURVEYED BY: KUO Inc.
FB NO. F-4578

This document is released for the purposes of interim review only under the authority of:

Neha Raval, P.E.
Texas P.E. No. 141506
09/11/2026

It is not to be used for bidding, construction, or permitting purposes.

CITY OF HOUSTON

HOUSTON PUBLIC WORKS

LIFT STATION REHABILITATION & RECONSTRUCTION

DEMOLITION SITE PLAN
– LAKE VILLAGE LS
LV-C-2

WBS NUMBER	FOR CITY OF HOUSTON USE ONLY
R-000267-178A-3	
DRAWING SCALE	
AS NOTED	
CITY OF HOUSTON PM	
TAHA LOTIA	
SHEET NO. 20 OF 147	

FILE PATH: C:\Users\andres.martinezjr\DC\ACCDocs\Tetra Tech Inc\200-317106-24001 COH LS Rehab Design\Project Files\CAD\R-000267-[illegible] PLAN PLOTTED: 9/9/2025 3:54:54 PM

NOTES:

1. CONTRACTOR TO MAINTAIN POSITIVE DRAINAGE.
2. MATERIALS TO BE PLACED AWAY FROM DRIVEWAYS AND ACCESS TO PRIVATE PROPERTIES WITHIN ROW.
3. ALL FORCE MAIN BENDS AND FITTINGS MUST BE MECHANICALLY RESTRAINED OR ENCASED.
4. ALL NEW SANITARY SEWER, MANHOLES, AND FORCEMAIN TO BE INSTALLED VIA OPEN CUT UNLESS OTHERWISE SPECIFIED. FOR PVC PIPE INSTALLED BY TRENCHLESS METHODS, PROVIDE INTEGRAL RESTRAINED JOINTS AND PULL PIPE THROUGH HOLE OR CASING. FOR PVC PIPE PUSHED THROUGH HOLE OR CASING, PROVIDE APPROVED BELL INSERTION PROTECTION SYSTEM.
5. ALL PROPOSED SANITARY SEWER MANHOLES TO BE FLUSHED WITH ROADWAY PAVEMENT.
6. CONTRACTOR TO CONTAIN WORK IN SHOWN WORK AREA WITHIN THE EASEMENT.
7. LAYDOWN AREA MUST BE USED FOR MATERIAL AND EQUIPMENT STORAGE. ONCE THE CONSTRUCTION IS OVER, AREA MUST BE RESTORED TO EXISTING OR BETTER CONDITION.
8. LAYDOWN AREA MUST BE FENCED AND SECURED AT CONTRACTOR'S RESPONSIBILITY.
9. ALL AFFECTED AREA MUST MAINTAIN POSITIVE DRAINAGE AT ALL TIME AND AFTER CONSTRUCTION.
10. THE WORK AREA TO BE FENCED WITH OSHA AND COH APPROVED SECURITY FENCE FROM ALL SIDES.

N

0' 5' 10'

SCALE: 1"=5'

LEGEND

EX XX.XX	EXISTING GRADE
PR XX.XX	PROPOSED GRADE
TOP XX.XX	TOP OF PAVEMENT
TBC XX.XX	TOP OF BACK OF CURB
XX.XX%	DRAINAGE ARROW
	CONCRETE PAVEMENT
	CONCRETE SIDEWALK
	CONCRETE DRIVEWAY

TSARP CONVERSION REFERENCE MONUMENT

CITY OF HOUSTON MONUMENT 5770-7302 (ALSO FLOODPLAIN REFERENCE MARK NUMBER 070265) IS AN ALUMINUM DISK STAMPED C 103-38 BM 01 LOCATED ON SOUTH SIDEWALK ON KINGWOOD DRIVE EASTBOUND BRIDGE APPROXIMATELY 1.5 MILES EAST FROM THE INTERSECTION OF US 59 IN KEYMAP 336C IN THE SAN JACINTO RIVER WATERSHED.

PROJECT SITE MONUMENT

ELEV. 74.46 FT (NAVD 1988, 2001 ADJ. – PROJECT DATUM)
ELEV. 74.05 FT (NAVD 1988, (GEOID '18) – OBSERVED BY GPS SURVEYING AND PROCESSED IN REFERENCE TO THE CORS DATED MARCH 18, 2025)

TBM
B-11: SET "X" CUT ON CONC,
STA:2+12.62, 20.81RT
ELEV:75.61'
B-12: SET 1/2" I.R. W/CAP,
STA:1+09.15, 69.36RT
ELEV:74.02'
B-101: SET 1/2" I.R. W/CAP,
STA:4+15.97, 7.12LT
ELEV:75.65'

RPS
A TETRA TECH COMPANY
Texas PE Firm Reg. #F-929
575 N. Dairy Ashford, Suite 700,
Houston, Texas 77079
T +1 281 589 7257
E usinfrastructure@rpsgroup.com

SURVEYED BY: KUO Inc.
FB NO. F-4578

This document is released for the purposes of interim review only under the authority of:

Neha Raval, P.E.
Texas P.E. No. 141506
09/11/2026

It is not to be used for bidding, construction, or permitting purposes.

CITY OF HOUSTON
HOUSTON PUBLIC WORKS

LIFT STATION REHABILITATION & RECONSTRUCTION

GRADING & DRAINAGE PLAN
– LAKE VILLAGE LS
LV-C-3

WBS NUMBER	FOR CITY OF HOUSTON USE ONLY
R-000267-178A-3	
DRAWING SCALE	
AS NOTED	
CITY OF HOUSTON PM	
TAHA LOTIA	
SHEET NO. 21 OF 147	

FILE PATH: C:\Users\andres.martinezjr\DC\ACCDocs\Tetra Tech Inc\200-317106-24001 COH LS Rehab Design\Project Files\CAD\R-000267-0702A-3TYE GRADING & DRAINAGE PLAN.dwg
PLOTTED: 9/8/2026 6:24:14 PM

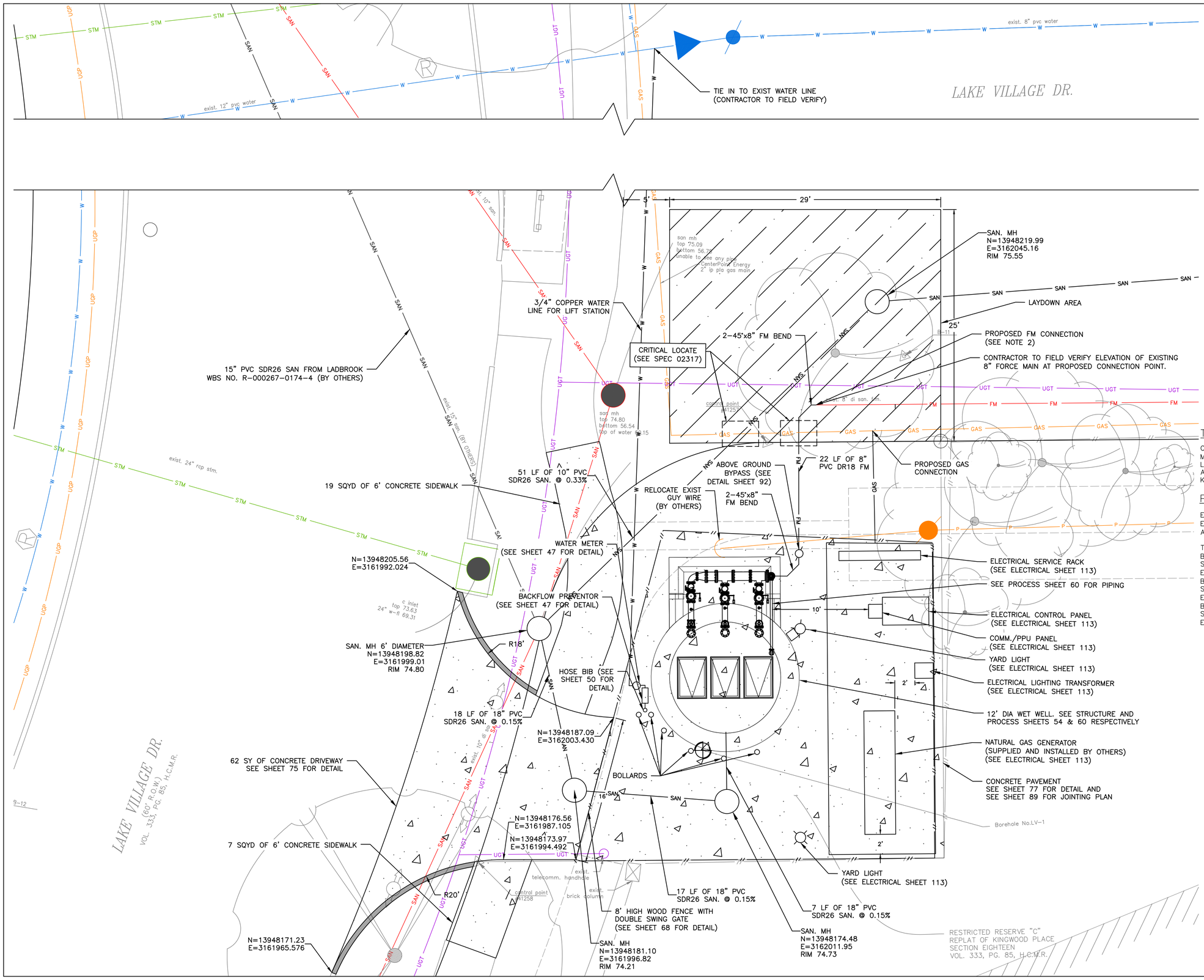

0' 5' 10'

SCALE: 1"=5'

NOTES:.

1. MATERIALS TO BE PLACED AWAY FROM DRIVEWAYS AND ACCESS TO PRIVATE PROPERTIES WITHIN ROW.
2. ALL FORCE MAIN BENDS AND FITTINGS MUST BE MECHANICALLY RESTRAINED OR ENCASED.
3. ALL NEW SANITARY SEWER, MANHOLES, AND FORCEMAIN TO BE INSTALLED VIA OPEN CUT UNLESS OTHERWISE SPECIFIED. FOR PVC PIPE INSTALLED BY TRENCHLESS METHODS, PROVIDE INTEGRAL RESTRAINED JOINTS AND PULL PIPE THROUGH HOLE OR CASING. FOR PVC PIPE PUSHED THROUGH HOLE OR CASING, PROVIDE APPROVED BELL INSERTION PROTECTION SYSTEM.
4. ALL PROPOSED SANITARY SEWER MANHOLES TO BE FLUSHED WITH ROADWAY PAVEMENT

LEGEND

CONCRETE PAVEMENT

CONCRETE CURB

TSARP CONVERSION REFERENCE MONUMENT

CITY OF HOUSTON MONUMENT 5770-7302 (ALSO FLOODPLAIN REFERENCE MARK NUMBER 070265) IS AN ALUMINUM DISK STAMPED G 103-38 BM 01 LOCATED ON SOUTH SIDEWALK ON KINGWOOD DRIVE EASTBOUND BRIDGE APPROXIMATELY 1.5 MILES EAST FROM THE INTERSECTION OF US 59 IN KEYMAP 336C IN THE SAN JACINTO RIVER WATERSHED.

PROJECT SITE MONUMENT

ELEV. 74.46 FT (NAVD 1988, 2001 ADJ. – PROJECT DATUM)
ELEV. 74.05 FT (NAVD 1988, (GEOID '18) – OBSERVED BY GPS SURVEYING AND PROCESSED IN REFERENCE TO THE CORS DATED MARCH 18, 2025)

TBM
B-11: SET "X" CUT ON CONC,
STA:2+12.62, 20.81RT
ELEV:75.61'
B-12: SET 1/2" I.R. W/CAP,
STA:1+09.15, 69.36RT
ELEV:74.02'
B-101: SET 1/2" I.R. W/CAP,
STA:4+15.97, 7.12LT
ELEV:75.65'

TETRA TECH COMPANY
Texas PE Firm Reg. #F-929
575 N. Dairy Ashford, Suite 700,
Houston, Texas 77079
T +1 281 589 7257
E usinfrastructure@rpsgroup.com

SURVEYED BY: KUO Inc.
FB NO. 000000

This document is released for the purposes of interim review only under the authority of:

Neha Raval, P.E.
Texas P.E. No. 141506
09/11/2026

It is not to be used for bidding, construction, or permitting purposes.

CITY OF HOUSTON
HOUSTON PUBLIC WORKS

RECONSTRUCTION & REHABILITATION
COH LIFT STATIONS

PROPOSED SITE PLAN –
LAKE VILLAGE LS
LV-C-4

WBS NUMBER	FOR CITY OF HOUSTON USE ONLY
R-000267-00178A-3	
DRAWING SCALE	
AS NOTED	
CITY OF HOUSTON PM	
TAHA LOTIA	
SHEET NO. 22 OF 137	

FILE PATH: C:\Users\andres.martinez\jr\DC\ACCDocs\Tetra Tech Inc\200-317106-24001 COH LS Rehab Design\Project Files\CAD\R-000267-

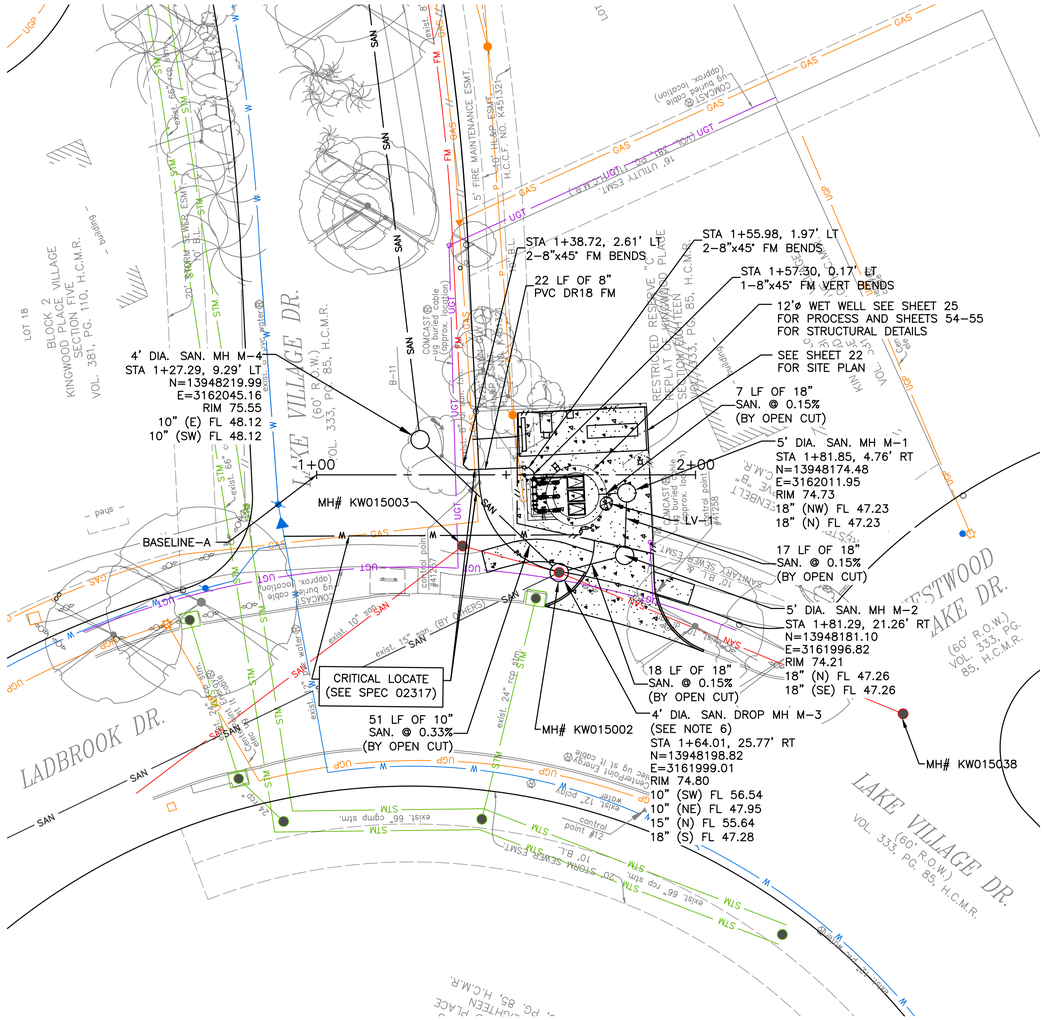
4' DIA. SAN. MH M-4
STA 1+27.29, 9.29' LT
N=13948219.99
E=3162045.16
RIM 75.55
10" (E) FL 48.12
10" (SW) FL 48.12
MH# KW015003
BASELINE-A
1+00
2+00
STA 1+38.72, 2.61' LT
2-8"x45° FM BENDS
22 LF OF 8"
PVC DR18 FM
STA 1+55.98, 1.97' LT
2-8"x45° FM BENDS
STA 1+57.30, 0.17' LT
1-8"x45° FM VERT BENDS
12'ø WET WELL SEE SHEET 25
FOR PROCESS AND SHEETS 54-55
FOR STRUCTURAL DETAILS
SEE SHEET 22
FOR SITE PLAN
7 LF OF 18"
SAN. @ 0.15%
(BY OPEN CUT)
5' DIA. SAN. MH M-1
STA 1+81.85, 4.76' RT
N=13948174.48
E=3162011.95
RIM 74.73
18" (NW) FL 47.23
18" (N) FL 47.23
17 LF OF 18"
SAN. @ 0.15%
(BY OPEN CUT)
5' DIA. SAN. MH M-2
STA 1+81.29, 21.26' RT
N=13948181.10
E=3161996.82
RIM 74.21
18" (N) FL 47.26
18" (SE) FL 47.26
18 LF OF 18"
SAN. @ 0.15%
(BY OPEN CUT)
4' DIA. SAN. DROP MH M-3
(SEE NOTE 6)
STA 1+64.01, 25.77' RT
N=13948198.82
E=3161999.01
RIM 74.80
10" (SW) FL 56.54
10" (NE) FL 47.95
15" (N) FL 55.64
18" (S) FL 47.28
MH# KW015002
MH# KW015038
51 LF OF 10"
SAN. @ 0.33%
(BY OPEN CUT)
CRITICAL LOCATE
(SEE SPEC 02317)
LADBROOK DR.
LAKE VILLAGE DR.
(60' R.O.W.)
VOL. 333, PG. 85, H.C.M.R.
WESTWOOD
LAKE DR.
(60' R.O.W.)
VOL. 333, PG. 85, H.C.M.R.
LOT 18
BLOCK 2
KINGWOOD PLACE VILLAGE
SECTION FIVE
VOL. 381, PG. 110, H.C.M.R.
RESTRICTED RESERVE "A"
KINGWOOD PLACE
SECTION FIFTEEN
VOL. 333, PG. 85, H.C.M.R.
5' FIRE MAINTENANCE ESMT.
16' HL&P ESMT.
H.C.C.F. NO. K451521
16' UTILITY ESMT.
H.C.C.F. NO. K451521
10' BL.
20' STORM SEWER ESMT.
H.C.C.F. NO. K451521
10' BL.
20' STORM SEWER ESMT.
H.C.C.F. NO. K451521
10' BL.
COMCAST @
10' buried cable
(approx. location)
control point #1258
control point #12
existing 12" water
existing 10" san. (BY OWNER)
existing 24" RCP storm
existing 66" comp storm
existing 66" rcp storm
existing 12" water
existing 8" san.
existing 6" san.
existing 6" water
existing 8" water
existing 6" water
existing 12" water
existing 8" water
existing 6" water
existing 8" water
existing 6" water
existing 8" water
existing 6

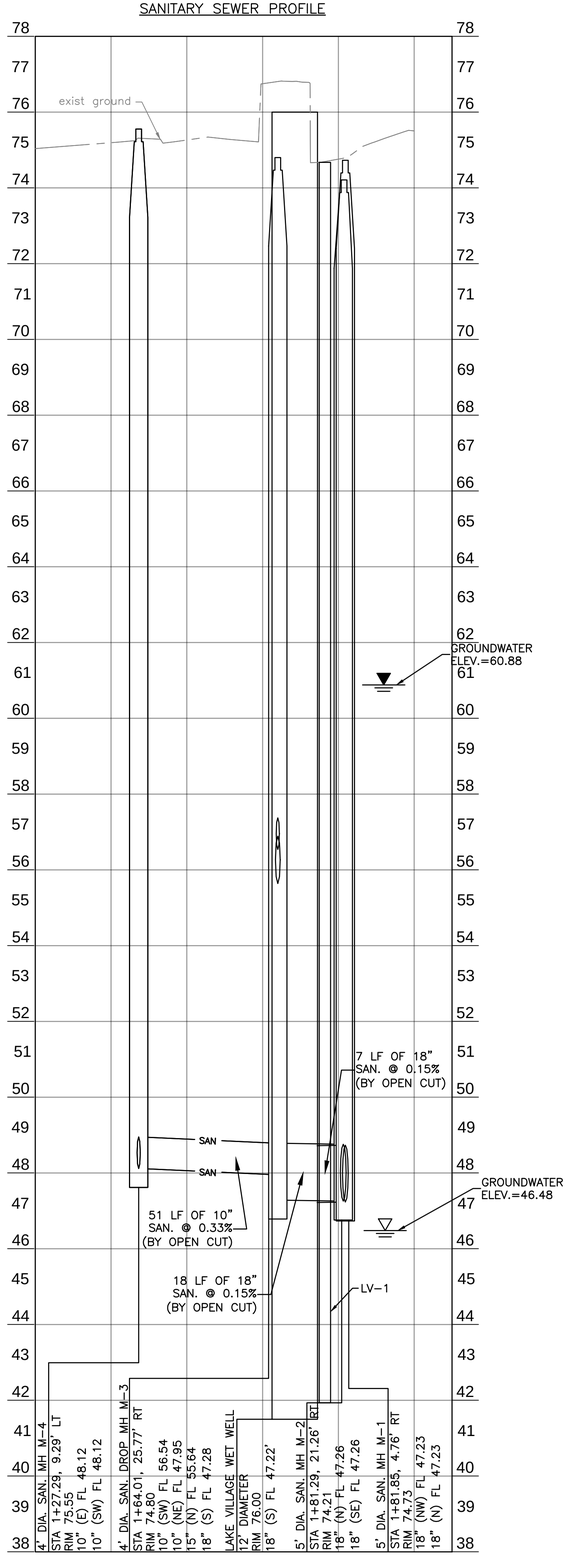

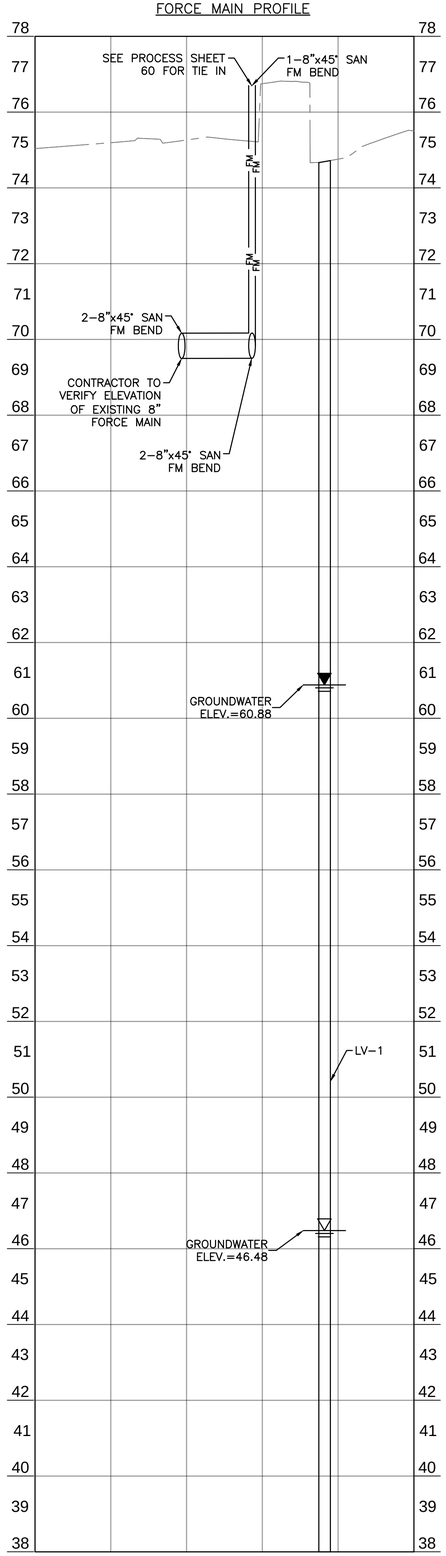

0' 10' 20' 40'
SCALE: 1"=20'
0' 1' 2' 4'
V SCALE: 1"=2'

LEGEND

FREE WATER DURING DRILLING

WATER DEPTH 24 HOURS AFTER DRILLING

rps
A TETRA TECH COMPANY
Texas PE Firm Reg. #F-929
575 N. Dairy Ashford, Suite 700,
Houston, Texas 77079
T +1 281 589 7257
E usinfrastructure@rpsgroup.com

This document is released for the purposes of interim review only under the authority of:

Neha Raval, P.E.
Texas P.E. No. 141506
09/11/2026

It is not to be used for bidding, construction, or permitting purposes.

SURVEYED BY: KUO Inc.
FB NO. F-4578

CITY OF HOUSTON
HOUSTON PUBLIC WORKS

LIFT STATION REHABILITATION & RECONSTRUCTION

LAKE VILLAGE LIFT STATION – PROFILE
STA. 1+00 TO 2+00
BASELINE-A
GS-C-2

WBS NUMBER	FOR CITY OF HOUSTON USE ONLY
R-000267-178A-3	
DRAWING SCALE	
AS NOTED	
CITY OF HOUSTON PM	
TAHA LOTIA	
SHEET NO. 24 OF 147	

FILE PATH: C:\Users\andres.martinezjr\DC\ACCDocs\Tetra Tech Inc\200-317106-24001 COH LS Rehab Design\Project Files\CAD\R-000267-0178A-3\Sheet Files\Lake Village LIFT STATION 9/9/2026 STA 1+00 TO 2+00.dwg

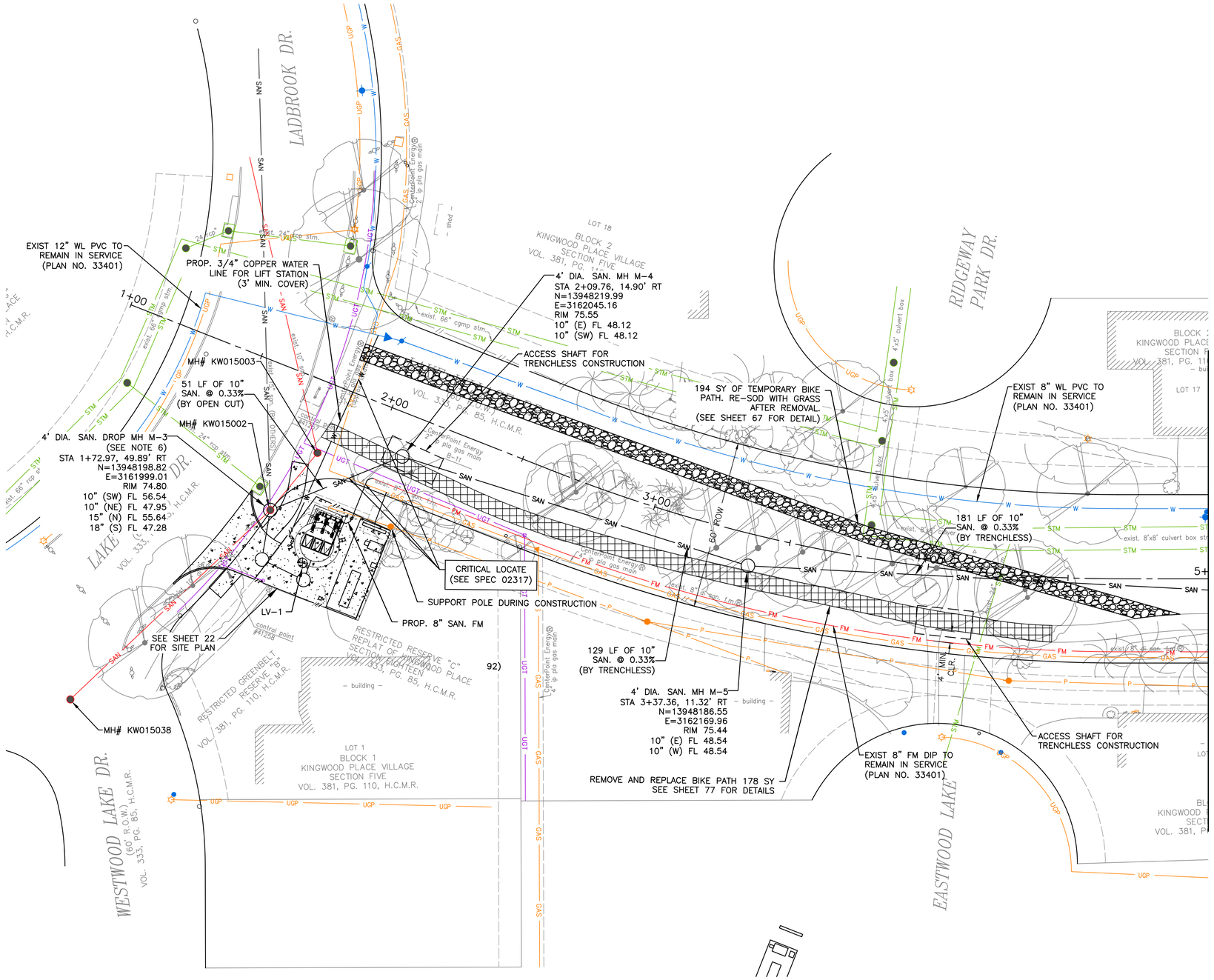

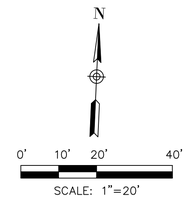

NOTES:
1. WASTE WATER LINE SHOWN ON THIS PLAN SHALL BE CONSTRUCTED BY MEANS OF OPEN CUT CONSTRUCTION UNLESS OTHERWISE STATED.
2. REFER TO TREE PROTECTION PLANS SHEET 41 TO 44 FOR APPROPROATE PROTECTION MEASURES. TREES OUTSIDE OF THE PROJECT LIMITS ARE TO BE PROTECTED AND REMAIN IN PLACE.
3. CONTRACTOR TO PROTECT AND REPLACE DAMAGED PAVEMENT AND CURB DURING SITE RESTORATION PER COH STANDARD DETAIL 2951-01 & 02.
4. ALL NEW SANITARY MANHOLES SHALL BE 4 FEET DIAMETER MANHOLES, UNLESS SPECIFIED OTHERWISE.
5. ALL PROPOSED MH MUST BE FLUSHED WITH THE PAVEMENT.
6. SEE SHEET 84 FOR DROP MH DETAIL 02082-02.
7. ACCESS SHAFT FOR TRENCHLESS CONSTRUCTION 20' BY 10'
8. ALL MATERIALS TO BE INSTALLED SHALL BE STORED WITHIN DESIGNATED LAYDOWN AREAS OR WITHIN THE RIGHT-OF-WAY ADJACENT TO THE WORK AREA AND SHALL NOT OBSTRUCT ANY DRIVEWAYS OR ACCESS TO RESIDENTIAL PROPERTIES.

TSARP CONVERSION REFERENCE MONUMENT

CITY OF HOUSTON MONUMENT 5770-7302 (ALSO FLOODPLAIN REFERENCE MARK NUMBER 070265) IS AN ALUMINUM DISK STAMPED G 103-38 BM 01 LOCATED ON SOUTH SIDEWALK ON KINGWOOD DRIVE EASTBOUND BRIDGE APPROXIMATELY 1.5 MILES EAST FROM THE INTERSECTION OF US 59 IN KEYMAP 336C IN THE SAN JACINTO RIVER WATERSHED.

PROJECT SITE MONUMENT

ELEV. 74.46 FT (NAVD 1988, 2001 ADJ. – PROJECT DATUM)
ELEV. 74.05 FT (NAVD 1988, (GEOID '18) – OBSERVED BY GPS SURVEYING AND PROCESSED IN REFERENCE TO THE CORS DATED MARCH 18, 2025)

TBM
B-11: SET "X" CUT ON CONC,
STA:2+12.62, 20.81RT
ELEV:75.61'
B-12: SET 1/2" I.R. W/CAP,
STA:1+09.15, 69.36RT
ELEV:74.02'
B-101: SET 1/2" I.R. W/CAP,
STA:4+15.97, 7.12LT
ELEV:75.65'

RPS
A TETRA TECH COMPANY
Texas PE Firm Reg. #F-929
575 N. Dairy Ashford, Suite 700,
Houston, Texas 77079
T +1 281 589 7257
E usinfrastructure@rpsgroup.com

SURVEYED BY: KUO Inc.
FB NO. F-4578

This document is released for the purposes of interim review only under the authority of:

Neha Raval, P.E.
Texas P.E. No. 141506
09/11/2026

It is not to be used for bidding, construction, or permitting purposes.

CITY OF HOUSTON
HOUSTON PUBLIC WORKS

LIFT STATION REHABILITATION & RECONSTRUCTION

TRAILWOOD GRAVITY DIVERSION PLAN
STA. 1+00 TO STA. 5+00
GS-C-3

WBS NUMBER	FOR CITY OF HOUSTON USE ONLY
R-000267-178A-3	
DRAWING SCALE	
AS NOTED	
CITY OF HOUSTON PM	
TAHA LOTIA	
SHEET NO. 25 OF 147	

FILE PATH: C:\Users\andres.martinezjr\DC\ACCDocs\Tetra Tech Inc\200-317106-24001 COH LS Rehab Design\Project Files\CAD\R-000267-0[illegible] 9/23/2026 3:26:00 PM GRAVITY DIVERSION STA. 5+00.dwg

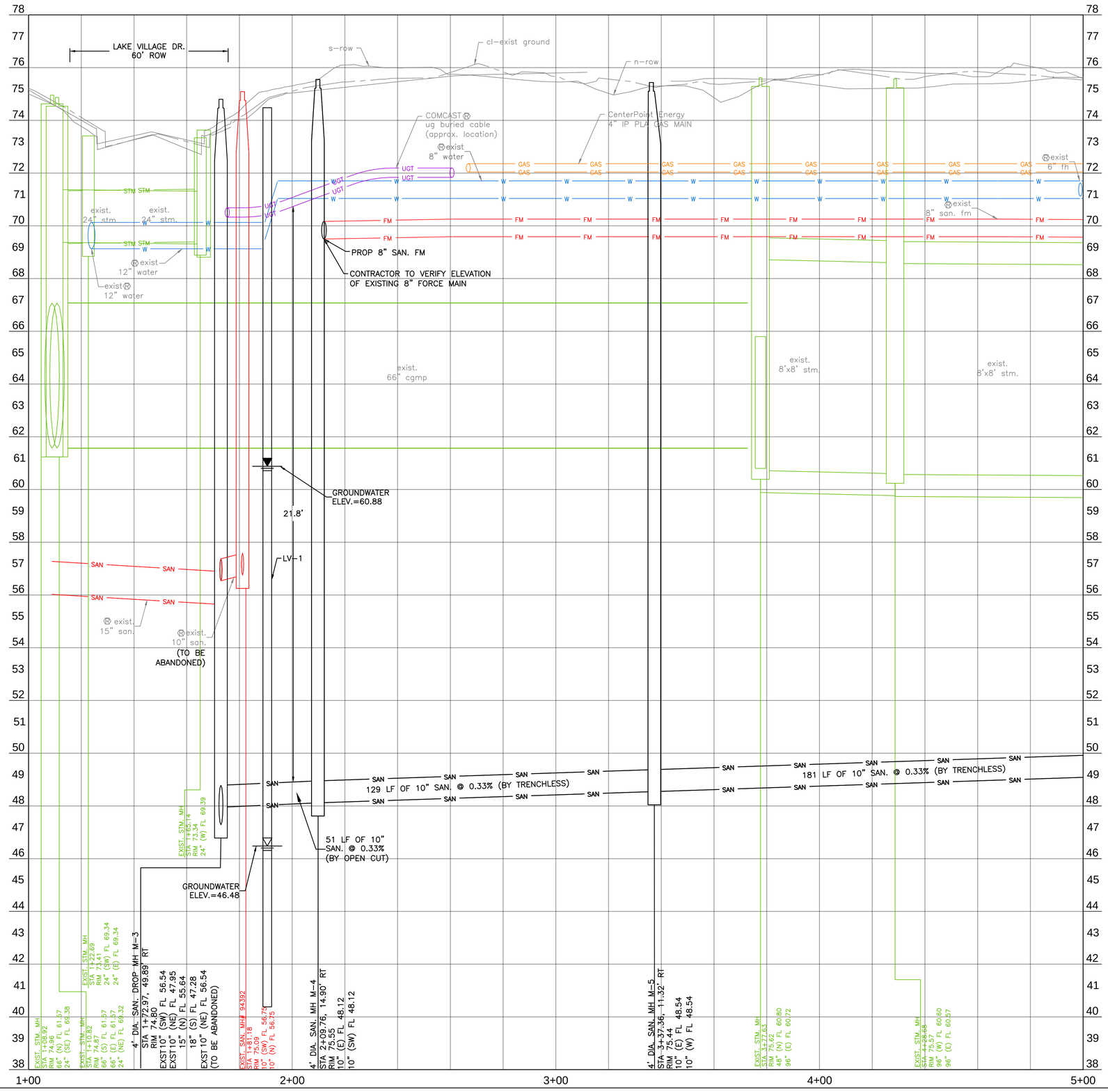

0' 10' 20' 40'
SCALE: 1"=20'
0' 1' 2' 4'
V SCALE: 1"=2'

LEGEND

FREE WATER DURING DRILLING

WATER DEPTH 24 HOURS AFTER DRILLING

rps
A TETRA TECH COMPANY
Texas PE Firm Reg. #F-929
575 N. Dairy Ashford, Suite 700,
Houston, Texas 77079
T +1 281 589 7257
E usinfrastructure@rpsgroup.com

SURVEYED BY: KUO Inc.
FB NO. F-4578

This document is released for the purposes of interim review only under the authority of:

Neha Raval, P.E.
Texas P.E. No. 141506
09/11/2026

It is not to be used for bidding, construction, or permitting purposes.

CITY OF HOUSTON
HOUSTON PUBLIC WORKS

LIFT STATION REHABILITATION & RECONSTRUCTION

TRAILWOOD GRAVITY DIVERSION PROFILE
STA. 1+00 TO STA. 5+00
GS-C-4

WBS NUMBER	FOR CITY OF HOUSTON USE ONLY
R-000267-178A-3	
DRAWING SCALE	
AS NOTED	
CITY OF HOUSTON PM	
TAHA LOTIA	
SHEET NO. 26 OF 147	

FILE PATH: C:\Users\andres.martinezjr\DC\ACCDocs\Tetra Tech Inc\200-317106-24001 COH LS Rehab Design\Project Files\CAD\R-000267-178A-3_TRAILWOOD GRAVITY DIVERSION PROFILE STA. 5+00.dwg

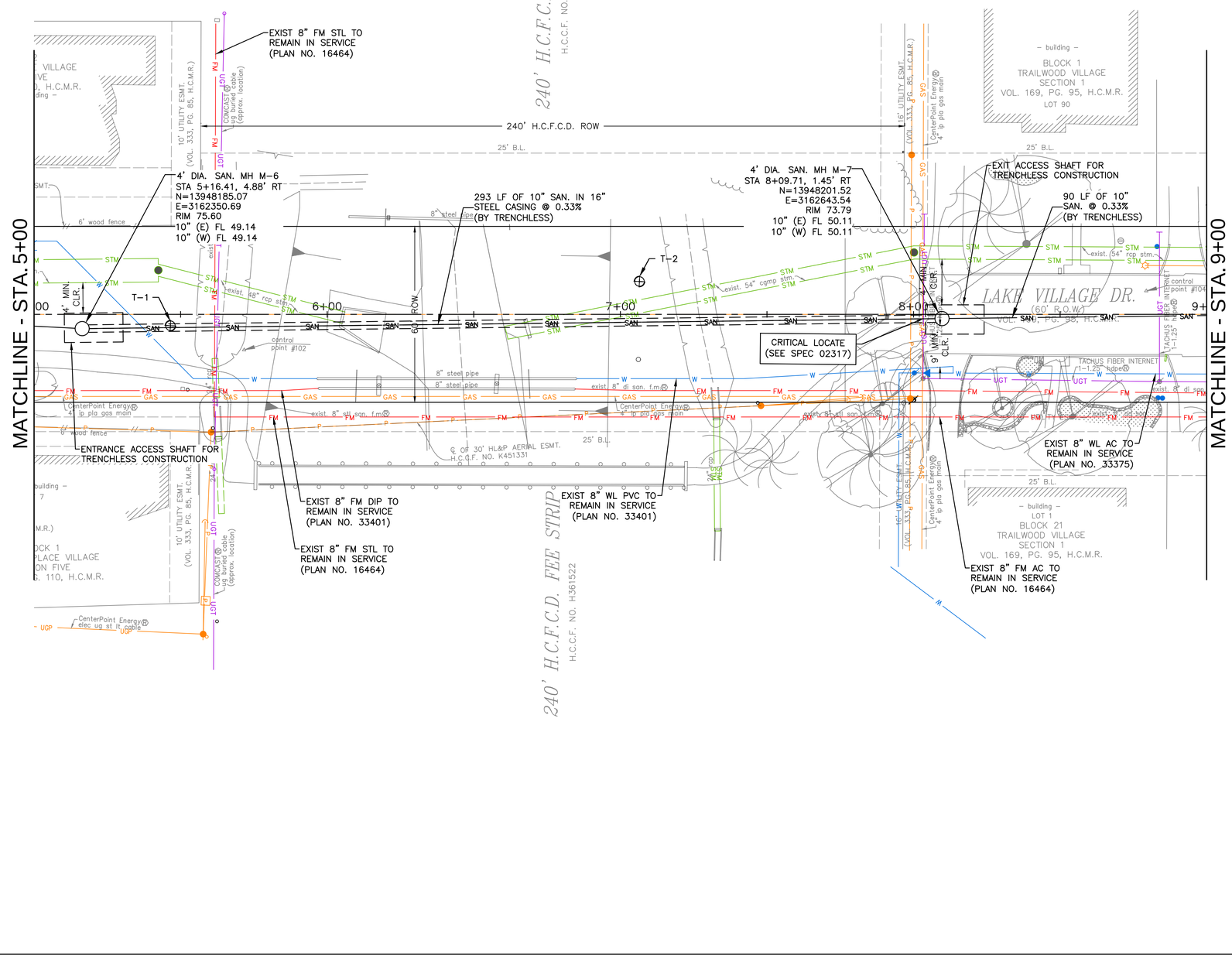

N

0' 10' 20' 40'

SCALE: 1"=20'

NOTES:
1. WASTE WATER LINE SHOWN ON THIS PLAN SHALL BE CONSTRUCTED BY MEANS OF OPEN CUT CONSTRUCTION UNLESS OTHERWISE STATED.
2. REFER TO TREE PROTECTION PLANS SHEET 41 TO 44 FOR APPROPROATE PROTECTION MEASURES. TREES OUTSIDE OF THE PROJECT LIMITS ARE TO BE PROTECTED AND REMAIN IN PLACE.
3. CONTRACTOR TO PROTECT AND REPLACE DAMAGED PAVEMENT AND CURB DURING SITE RESTORATION.
4. ALL NEW SANITARY MANHOLES SHALL BE 4 FEET DIAMETER MANHOLES, UNLESS SPECIFIED OTHERWISE.
5. ALL PROPOSED MH MUST BE FLUSHED WITH THE PAVEMENT
6. REFER TO COH SPECIFICATION 02426 FOR TRENCHLESS INSTALLATION OF SEWER.
7. ACCESS SHAFT FOR TRENCHLESS CONSTRUCTION 20' BY 10'

TSARP CONVERSION REFERENCE MONUMENT

CITY OF HOUSTON MONUMENT 5770-7302 (ALSO FLOODPLAIN REFERENCE MARK NUMBER 070265) IS AN ALUMINUM DISK STAMPED G 103-38 BM 01 LOCATED ON SOUTH SIDEWALK ON KINGWOOD DRIVE EASTBOUND BRIDGE APPROXIMATELY 1.5 MILES EAST FROM THE INTERSECTION OF US 59 IN KEYMAP 336C IN THE SAN JACINTO RIVER WATERSHED.

PROJECT SITE MONUMENT

ELEV. 74.46 FT (NAVD 1988, 2001 ADJ. – PROJECT DATUM)
ELEV. 74.05 FT (NAVD 1988, (GEOID '18) – OBSERVED BY GPS SURVEYING AND PROCESSED IN REFERENCE TO THE CORS DATED MARCH 18, 2025)

TBM

B-101: SET 1/2" I.R. W/CAP,
STA:4+15.97, 7.12LT
ELEV:75.65'
B-102: FND 5/8" I.R. W/UNITED CAP
STA:5+71.68, 12.12RT
ELEV:75.05'
B-103: SET 'X' CUT ON CONC.,
STA:7+06.14, 15.38RT
ELEV:76.24'
B-104: SET 'X' CUT ON CONC.,
STA:8+79.40, 8.00LT
ELEV:73.45'

RPS A TETRA TECH COMPANY
Texas PE Firm Reg. #F-929
575 N. Dairy Ashford, Suite 700,
Houston, Texas 77079
T +1 281 589 7257
E usinfrastructure@rpsgroup.com

SURVEYED BY: KUO Inc.
FB NO. F-4578

This document is released for the purposes of interim review only under the authority of:

Neha Raval, P.E.
Texas P.E. No. 141506
09/11/2026

It is not to be used for bidding, construction, or permitting purposes.

CITY OF HOUSTON
HOUSTON PUBLIC WORKS

LIFT STATION REHABILITATION & RECONSTRUCTION

TRAILWOOD GRAVITY DIVERSION PLAN
STA. 5+00 TO STA. 9+00
GS-C-5

WBS NUMBER	FOR CITY OF HOUSTON USE ONLY
R-000267-178A-3	
DRAWING SCALE	
AS NOTED	
CITY OF HOUSTON PM	
TAHA LOTIA	
SHEET NO. 27 OF 147	

FILE PATH: C:\Users\andres.martinezjr\DC\ACCDocs\Tetra Tech Inc\200-317106-24001 COH LS Rehab Design\Project Files\CAD\R-000267-178A-3_TRAILWOOD GRAVITY DIVERSION 9+00 TO STA. 9+00.dwg

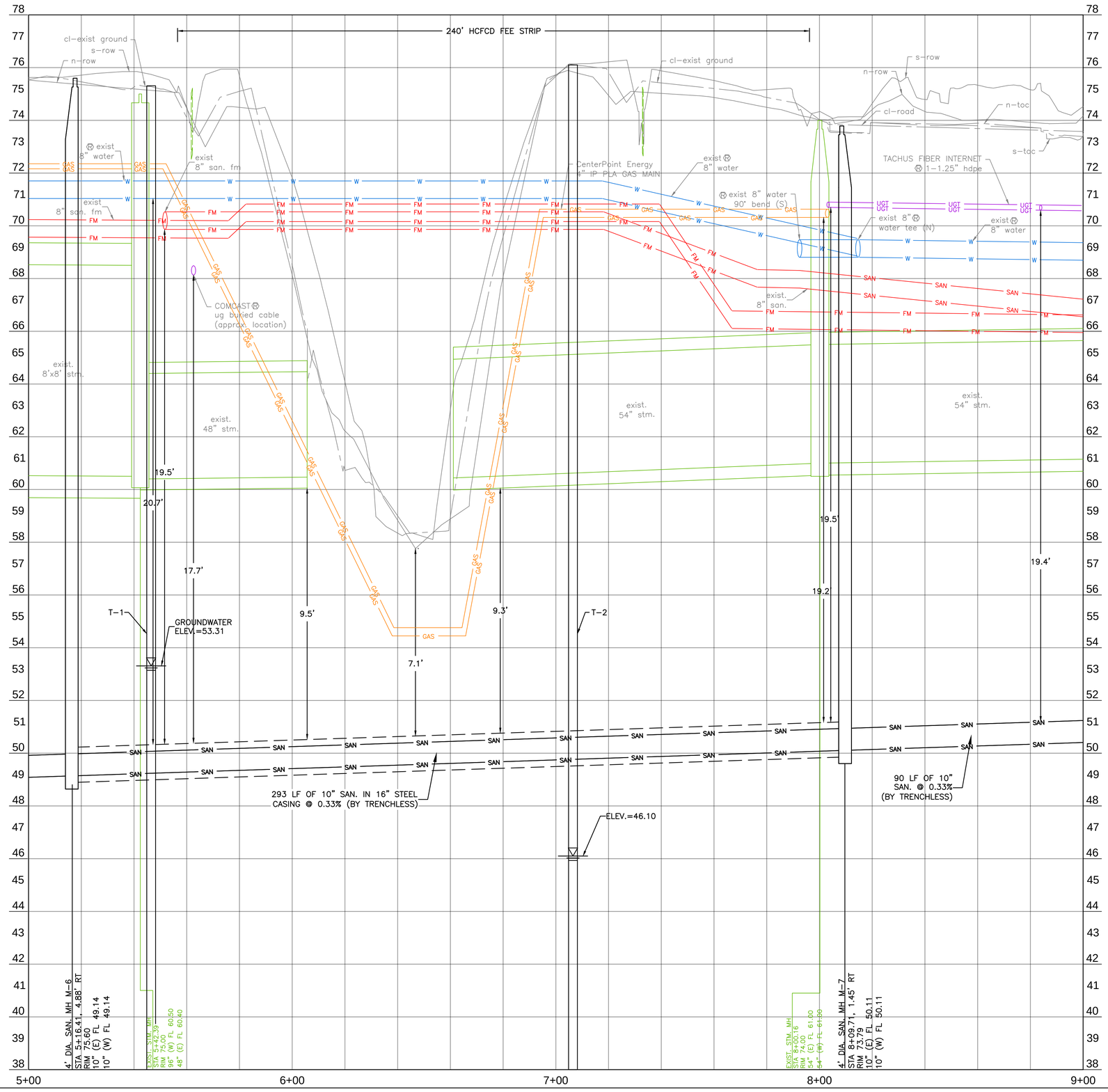

0' 10' 20' 40'
SCALE: 1"=20'
0' 1' 2' 4'
V SCALE: 1"=2'

LEGEND

FREE WATER DURING DRILLING

WATER DEPTH 24 HOURS AFTER DRILLING

RPS A TETRA TECH COMPANY
Texas PE Firm Reg. #F-929
575 N. Dairy Ashford, Suite 700, Houston, Texas 77079
T +1 281 589 7257
E usinfrastructure@rpsgroup.com

SURVEYED BY: KUO Inc.
FB NO. F-4578

This document is released for the purposes of interim review only under the authority of:

Neha Raval, P.E.
Texas P.E. No. 141506
09/11/2026

It is not to be used for bidding, construction, or permitting purposes.

CITY OF HOUSTON
HOUSTON PUBLIC WORKS

LIFT STATION REHABILITATION & RECONSTRUCTION

TRAILWOOD GRAVITY DIVERSION PROFILE
STA. 5+00 TO STA. 9+00
GS-C-6

WBS NUMBER	FOR CITY OF HOUSTON USE ONLY
R-000267-178A-3	
DRAWING SCALE	
AS NOTED	
CITY OF HOUSTON PM	
TAHA LOTIA	
SHEET NO. 28 OF 147	

FILE PATH: C:\Users\andres.martinezjr\DC\ACCDocs\Tetra Tech Inc\200-317106-24001 COH LS Rehab Design\Project Files\CAD\R-000267-178A-3_TRAILWOOD GRAVITY DIVERSION 9+00 TO STA. 5+00.dwg

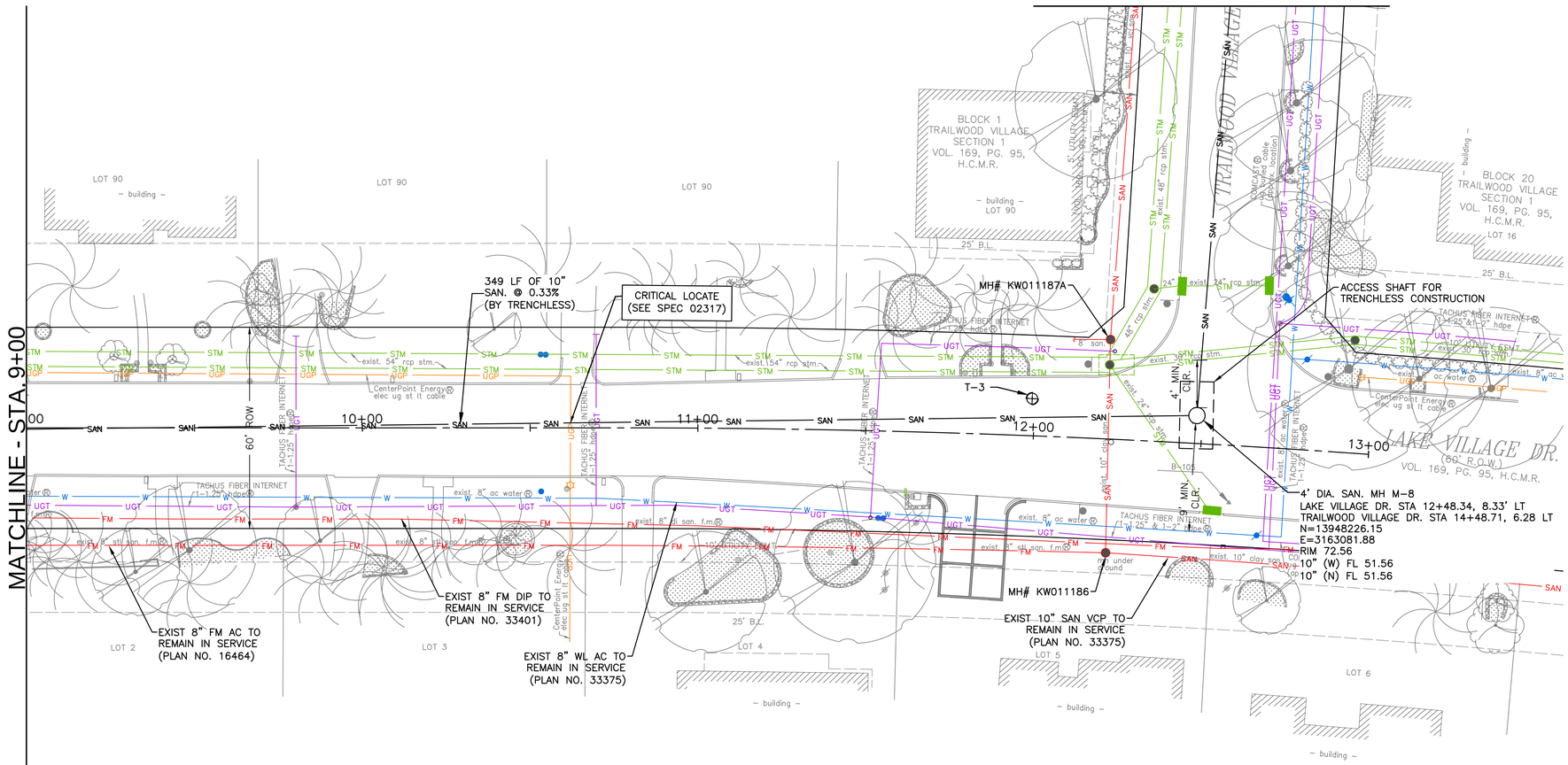

N

0' 10' 20' 40'

SCALE: 1"=20'

NOTES:
1. WASTE WATER LINE SHOWN ON THIS PLAN SHALL BE CONSTRUCTED BY MEANS OF OPEN CUT CONSTRUCTION UNLESS OTHERWISE STATED.
2. REFER TO TREE PROTECTION PLANS SHEET 41 TO 44 FOR APPROPROATE PROTECTION MEASURES. TREES OUTSIDE OF THE PROJECT LIMITS ARE TO BE PROTECTED AND REMAIN IN PLACE.
3. CONTRACTOR TO PROTECT AND REPLACE DAMAGED PAVEMENT AND CURB DURING SITE RESTORATION.
4. ALL NEW SANITARY MANHOLES SHALL BE 4 FEET DIAMETER MANHOLES, UNLESS SPECIFIED OTHERWISE.
5. ALL PROPOSED MH MUST BE FLUSHED WITH THE PAVEMENT
6. REFER TO COH SPECIFICATION 02426 FOR TRENCHLESS INSTALLATION OF SEWER.
7. ACCESS SHAFT FOR TRENCHLESS CONSTRUCTION 20' BY 10'

TSARP CONVERSION REFERENCE MONUMENT

CITY OF HOUSTON MONUMENT 5770-7302 (ALSO FLOODPLAIN REFERENCE MARK NUMBER 070265) IS AN ALUMINUM DISK STAMPED G 103-38 BM 01 LOCATED ON SOUTH SIDEWALK ON KINGWOOD DRIVE EASTBOUND BRIDGE APPROXIMATELY 1.5 MILES EAST FROM THE INTERSECTION OF US 59 IN KEYMAP 336C IN THE SAN JACINTO RIVER WATERSHED.

PROJECT SITE MONUMENT

ELEV. 74.46 FT (NAVD 1988, 2001 ADJ. – PROJECT DATUM)
ELEV. 74.05 FT (NAVD 1988, (GEOID '18) – OBSERVED BY GPS SURVEYING AND PROCESSED IN REFERENCE TO THE CORS DATED MARCH 18, 2025)

TBM

B-105: SET 'X' CUT ON CONC.,
STA:14+23.36, 4.82RT
ELEV:72.21'

RPS A TETRA TECH COMPANY
Texas PE Firm Reg. #F-929
575 N. Dairy Ashford, Suite 700,
Houston, Texas 77079
T +1 281 589 7257
E usinfrastructure@rpsgroup.com

SURVEYED BY: KUO Inc.
FB NO. F-4578

This document is released for the purposes of interim review only under the authority of:

Neha Raval, P.E.
Texas P.E. No. 141506
09/11/2026

It is not to be used for bidding, construction, or permitting purposes.

CITY OF HOUSTON
HOUSTON PUBLIC WORKS

LIFT STATION REHABILITATION & RECONSTRUCTION

TRAILWOOD GRAVITY DIVERSION PLAN
STA. 9+00 TO STA. 13+00
GS-C-7

WBS NUMBER	FOR CITY OF HOUSTON USE ONLY
R-000267-178A-3	
DRAWING SCALE	
AS NOTED	
CITY OF HOUSTON PM	
TAHA LOTIA	
SHEET NO. 29 OF 147	

FILE PATH: C:\Users\andres.martinezjr\DC\ACCDocs\Tetra Tech Inc\200-317106-24001 COH LS Rehab Design\Project Files\CAD\R-000267-178A-3_TRAILWOOD GRAVITY DIVERSION 9+00 TO STA. 13+00.dwg

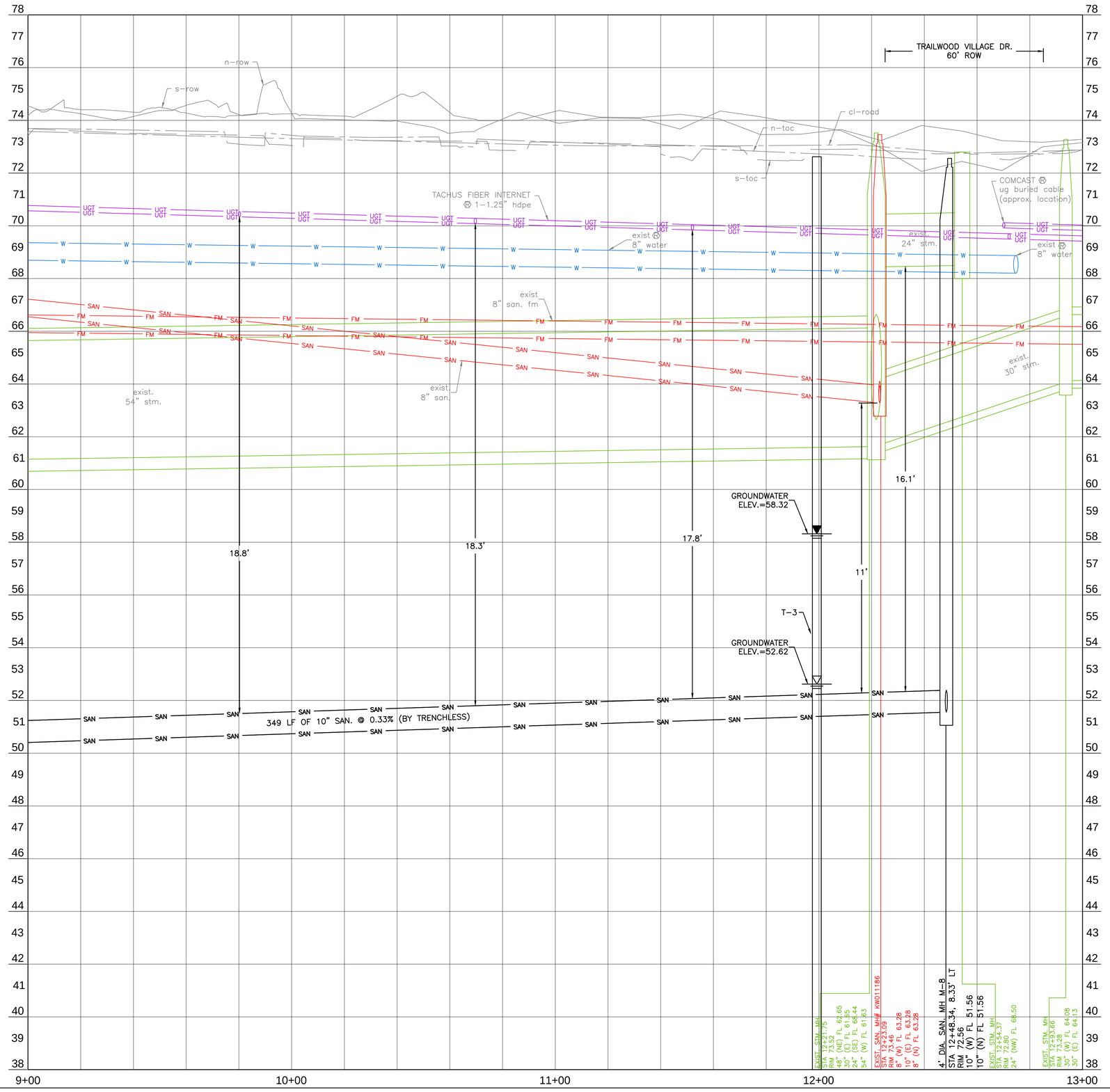

0' 10' 20' 40'
SCALE: 1"=20'
0' 1' 2' 4'
V SCALE: 1"=2'

LEGEND

FREE WATER DURING DRILLING

WATER DEPTH 24 HOURS AFTER DRILLING

RPS
A TETRA TECH COMPANY
Texas PE Firm Reg. #F-929
575 N. Dairy Ashford, Suite 700,
Houston, Texas 77079
T +1 281 589 7257
E usinfrastructure@rpsgroup.com

This document is released for the purposes of interim review only under the authority of:

Neha Raval, P.E.
Texas P.E. No. 141506
09/11/2026

It is not to be used for bidding, construction, or permitting purposes.

SURVEYED BY: KUO Inc.
FB NO. F-4578

CITY OF HOUSTON
HOUSTON PUBLIC WORKS

LIFT STATION REHABILITATION & RECONSTRUCTION

TRAILWOOD GRAVITY DIVERSION
PROFILE STA. 9+00 TO STA. 13+00
GS-C-8

WBS NUMBER	FOR CITY OF HOUSTON USE ONLY
R-000267-178A-3	
DRAWING SCALE	
AS NOTED	
CITY OF HOUSTON PM	
TAHA LOTIA	
SHEET NO. 30 OF 147	

FILE PATH: C:\Users\andres.martinezjr\DC\ACCDocs\Tetra Tech Inc\200-317106-24001 COH LS Rehab Design\Project Files\CAD\R-000267-178A-3_TRAILWOOD GRAVITY DIVERSION_9+00 TO STA. 13+00.dwg

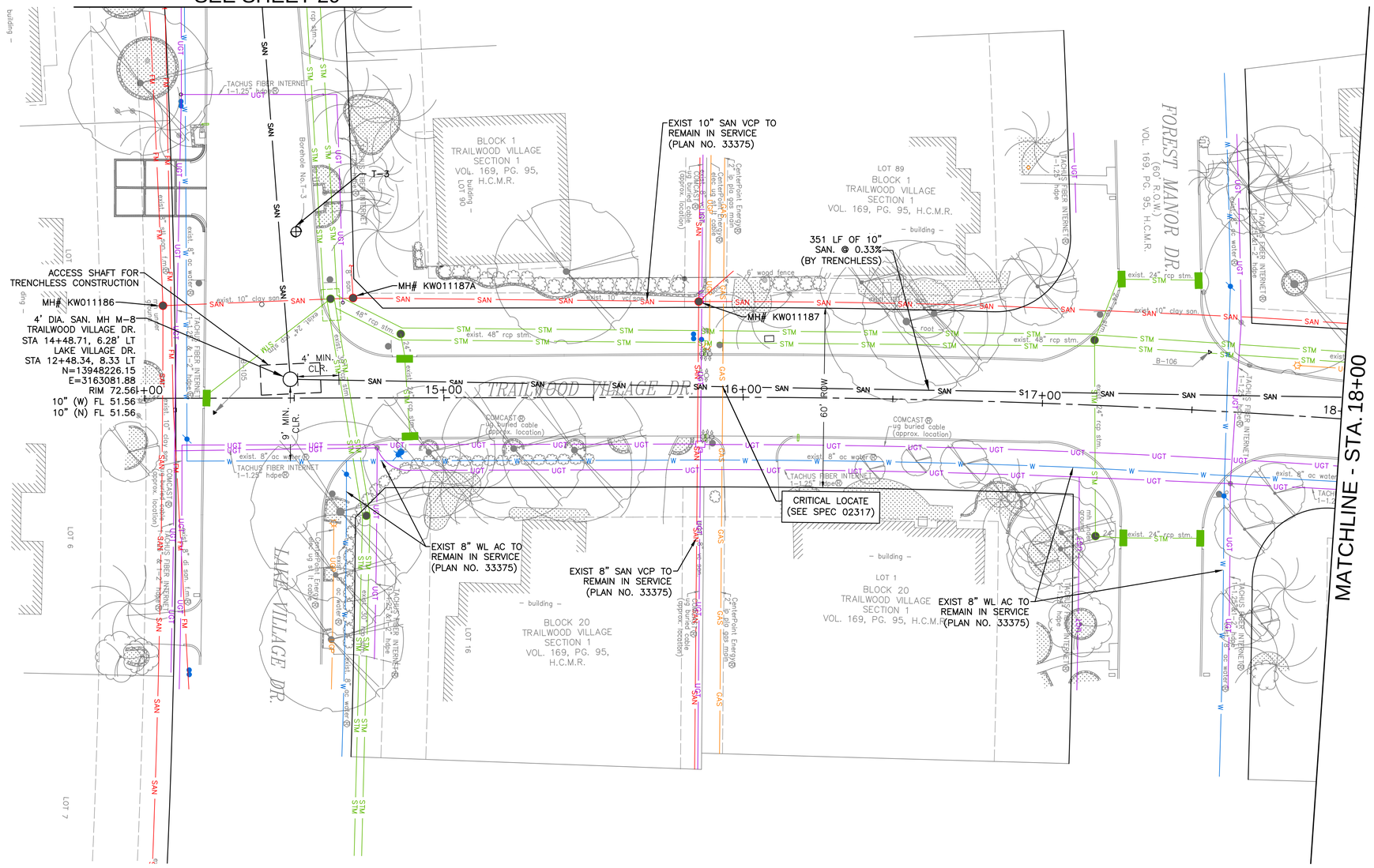

NOTES:
1. WASTE WATER LINE SHOWN ON THIS PLAN SHALL BE CONSTRUCTED BY MEANS OF OPEN CUT CONSTRUCTION UNLESS OTHERWISE STATED.
2. REFER TO TREE PROTECTION PLANS SHEET 41 TO 44 FOR APPROPROATE PROTECTION MEASURES. TREES OUTSIDE OF THE PROJECT LIMITS ARE TO BE PROTECTED AND REMAIN IN PLACE.
3. CONTRACTOR TO PROTECT AND REPLACE DAMAGED PAVEMENT AND CURB DURING SITE RESTORATION.
4. ALL NEW SANITARY MANHOLES SHALL BE 4 FEET DIAMETER MANHOLES, UNLESS SPECIFIED OTHERWISE.
5. ALL PROPOSED MH MUST BE FLUSHED WITH THE PAVEMENT
6. REFER TO COH SPECIFICATION 02426 FOR TRENCHLESS INSTALLATION OF SEWER.
7. ACCESS SHAFT FOR TRENCHLESS CONSTRUCTION 20' BY 10'

SCALE: 1"=20'

TSARP CONVERSION REFERENCE MONUMENT

CITY OF HOUSTON MONUMENT 5770-7302 (ALSO FLOODPLAIN REFERENCE MARK NUMBER 070265) IS AN ALUMINUM DISK STAMPED G 103-38 BM 01 LOCATED ON SOUTH SIDEWALK ON KINGWOOD DRIVE EASTBOUND BRIDGE APPROXIMATELY 1.5 MILES EAST FROM THE INTERSECTION OF US 59 IN KEYMAP 336C IN THE SAN JACINTO RIVER WATERSHED.

PROJECT SITE MONUMENT

ELEV. 74.46 FT (NAVD 1988, 2001 ADJ. – PROJECT DATUM)
ELEV. 74.05 FT (NAVD 1988, (GEOID '18) – OBSERVED BY GPS SURVEYING AND PROCESSED IN REFERENCE TO THE CORS DATED MARCH 18, 2025)

TBM

B-105: SET 'X' CUT ON CONC.,
STA:14+23.36, 4.82RT
ELEV:72.21'
B-106: SET 'X' CUT ON CONC.,
STA:17+54.86, 19.57RT
ELEV:72.75'

RPS A TETRA TECH COMPANY
Texas PE Firm Reg. #F-929
575 N. Dairy Ashford, Suite 700,
Houston, Texas 77079
T +1 281 589 7257
E usinfrastructure@rpsgroup.com

SURVEYED BY: KUO Inc.
FB NO. F-4578

This document is released for the purposes of interim review only under the authority of:

Neha Raval, P.E.
Texas P.E. No. 141506
09/11/2026

It is not to be used for bidding, construction, or permitting purposes.

CITY OF HOUSTON
HOUSTON PUBLIC WORKS

LIFT STATION REHABILITATION & RECONSTRUCTION

TRAILWOOD GRAVITY DIVERSION PLAN
STA. 14+00 TO STA. 18+00
GS-C-9

WBS NUMBER	FOR CITY OF HOUSTON USE ONLY
R-000267-178A-3	
DRAWING SCALE	
AS NOTED	
CITY OF HOUSTON PM	
TAHA LOTIA	
SHEET NO. 31 OF 147	

FILE PATH: C:\Users\andres.martinezjr\DC\ACCDocs\Tetra Tech Inc\200-317106-24001 COH LS Rehab Design\Project Files\CAD\R-000267-178A-3_TRAILWOOD GRAVITY DIVERSION STA. 18+00.dwg

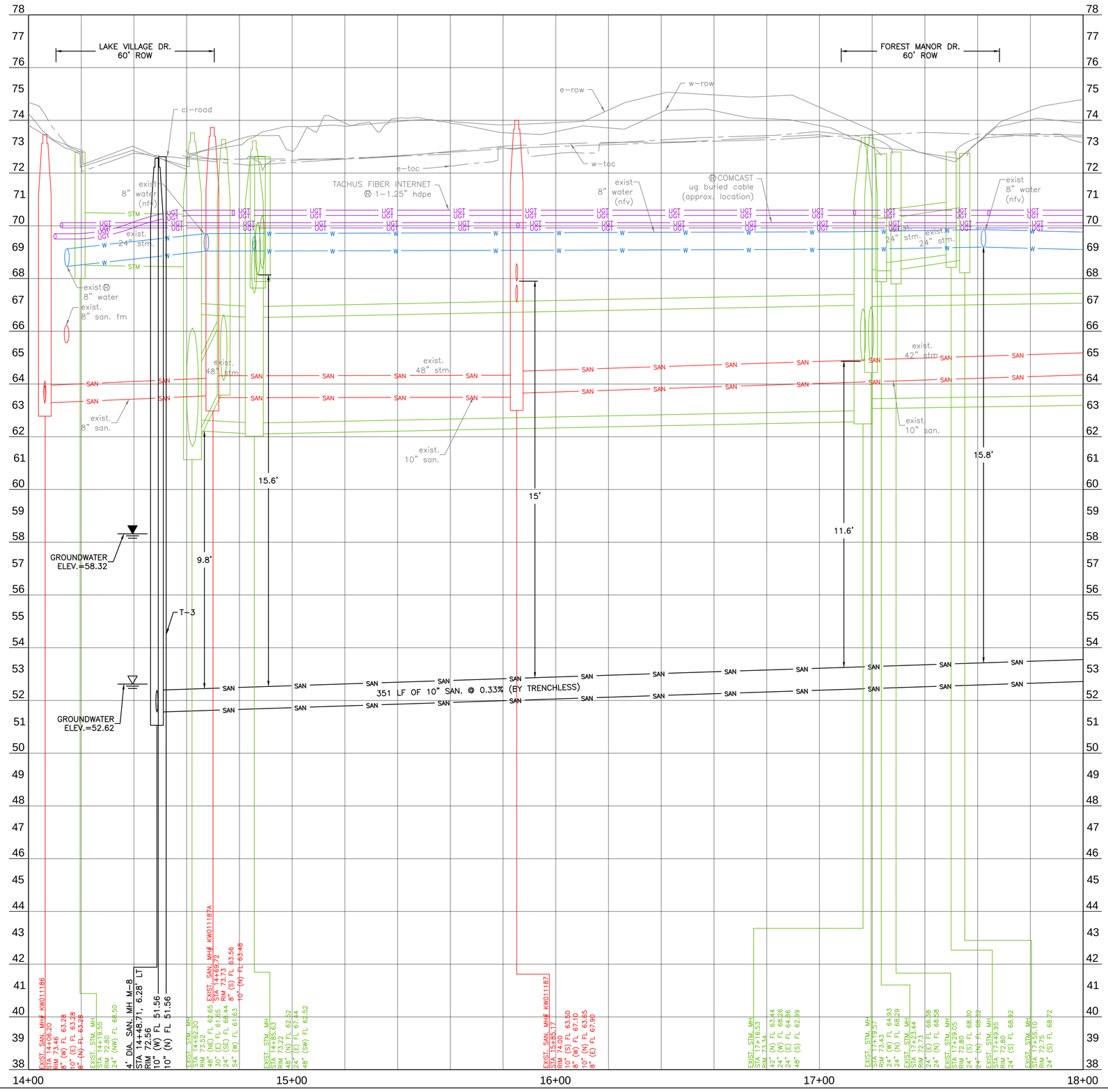

0' 10' 20' 40'
SCALE: 1"=20'
0' 1' 2' 4'
V SCALE: 1"=2'

LEGEND

FREE WATER DURING DRILLING

WATER DEPTH 24 HOURS AFTER DRILLING

RPS A TETRA TECH COMPANY
Texas PE Firm Reg. #F-929
575 N. Dairy Ashford, Suite 700,
Houston, Texas 77079
T +1 281 589 7257
E usinfrastructure@rpsgroup.com

SURVEYED BY: KUO Inc.
FB NO. F-4578

This document is released for the purposes of interim review only under the authority of:

Neha Raval, P.E.
Texas P.E. No. 141506
09/11/2026

It is not to be used for bidding, construction, or permitting purposes.

CITY OF HOUSTON
HOUSTON PUBLIC WORKS

LIFT STATION REHABILITATION & RECONSTRUCTION

TRAILWOOD GRAVITY DIVERSION
PROFILE STA. 14+00 TO STA. 18+00
GS-C-10

WBS NUMBER	FOR CITY OF HOUSTON USE ONLY
R-000267-178A-3	
DRAWING SCALE	
AS NOTED	
CITY OF HOUSTON PM	
TAHA LOTIA	
SHEET NO. 32 OF 147	

FILE PATH: C:\Users\andres.martinezjr\DC\ACCDocs\Tetra Tech Inc\200-317106-24001 COH LS Rehab Design\Project Files\CAD\R-000267-178A-3_TRAILWOOD GRAVITY DIVERSION STA. 18+00.dwg

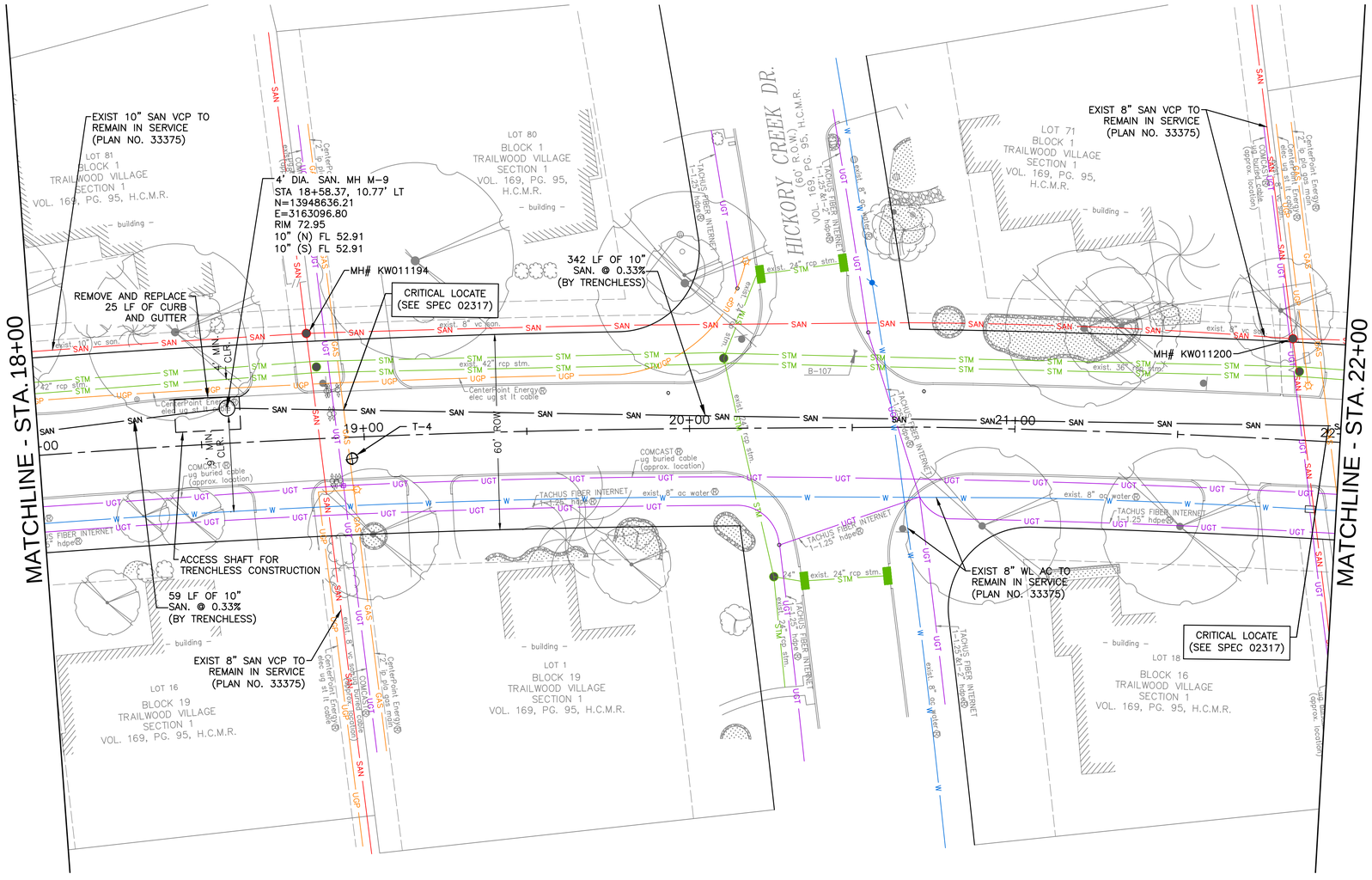

0' 10' 20' 40'

SCALE: 1"=20'

NOTES:
1. WASTE WATER LINE SHOWN ON THIS PLAN SHALL BE CONSTRUCTED BY MEANS OF OPEN CUT CONSTRUCTION UNLESS OTHERWISE STATED.
2. REFER TO TREE PROTECTION PLANS SHEET 41 TO 44 FOR APPROPROATE PROTECTION MEASURES. TREES OUTSIDE OF THE PROJECT LIMITS ARE TO BE PROTECTED AND REMAIN IN PLACE.
3. CONTRACTOR TO PROTECT AND REPLACE DAMAGED PAVEMENT AND CURB DURING SITE RESTORATION.
4. ALL NEW SANITARY MANHOLES SHALL BE 4 FEET DIAMETER MANHOLES, UNLESS SPECIFIED OTHERWISE.
5. ALL PROPOSED MH MUST BE FLUSHED WITH THE PAVEMENT
6. REFER TO COH SPECIFICATION 02426 FOR TRENCHLESS INSTALLATION OF SEWER.
7. ACCESS SHAFT FOR TRENCHLESS CONSTRUCTION 20' BY 10'

TSARP CONVERSION REFERENCE MONUMENT

CITY OF HOUSTON MONUMENT 5770-7302 (ALSO FLOODPLAIN REFERENCE MARK NUMBER 070265) IS AN ALUMINUM DISK STAMPED G 103-38 BM 01 LOCATED ON SOUTH SIDEWALK ON KINGWOOD DRIVE EASTBOUND BRIDGE APPROXIMATELY 1.5 MILES EAST FROM THE INTERSECTION OF US 59 IN KEYMAP 336C IN THE SAN JACINTO RIVER WATERSHED.

PROJECT SITE MONUMENT

ELEV. 74.46 FT (NAVD 1988, 2001 ADJ. – PROJECT DATUM)
ELEV. 74.05 FT (NAVD 1988, (GEOID '18) – OBSERVED BY GPS SURVEYING AND PROCESSED IN REFERENCE TO THE CORS DATED MARCH 18, 2025)

TBM

B-107: SET 'X' CUT ON CONC.,
STA:20+51.03, 23.40LT
ELEV:72.34'

RPS
A TETRA TECH COMPANY
Texas PE Firm Reg. #F-929
575 N. Dairy Ashford, Suite 700,
Houston, Texas 77079
T +1 281 589 7257
E usinfrastructure@rpsgroup.com

SURVEYED BY: KUO Inc.
FB NO. F-4578

This document is released for the purposes of interim review only under the authority of:

Neha Raval, P.E.
Texas P.E. No. 141506
09/11/2026

It is not to be used for bidding, construction, or permitting purposes.

CITY OF HOUSTON
HOUSTON PUBLIC WORKS

LIFT STATION REHABILITATION & RECONSTRUCTION

TRAILWOOD GRAVITY DIVERSION
PLAN STA. 18+00 TO STA. 22+00
GS-C-11

WBS NUMBER	FOR CITY OF HOUSTON USE ONLY
R-000267-178A-3	
DRAWING SCALE	
AS NOTED	
CITY OF HOUSTON PM	
TAHA LOTIA	
SHEET NO. 33 OF 147	

FILE PATH: C:\Users\andres.martinezjr\DC\ACCDocs\Tetra Tech Inc\200-317106-24001 COH LS Rehab Design\Project Files\CAD\R-000267--01GRA-STYEastPlanAndProfileGRAVITY DIVERSION 9/3/2026 4:57:08 PM GS-C-11 STA. 22+00.dwg

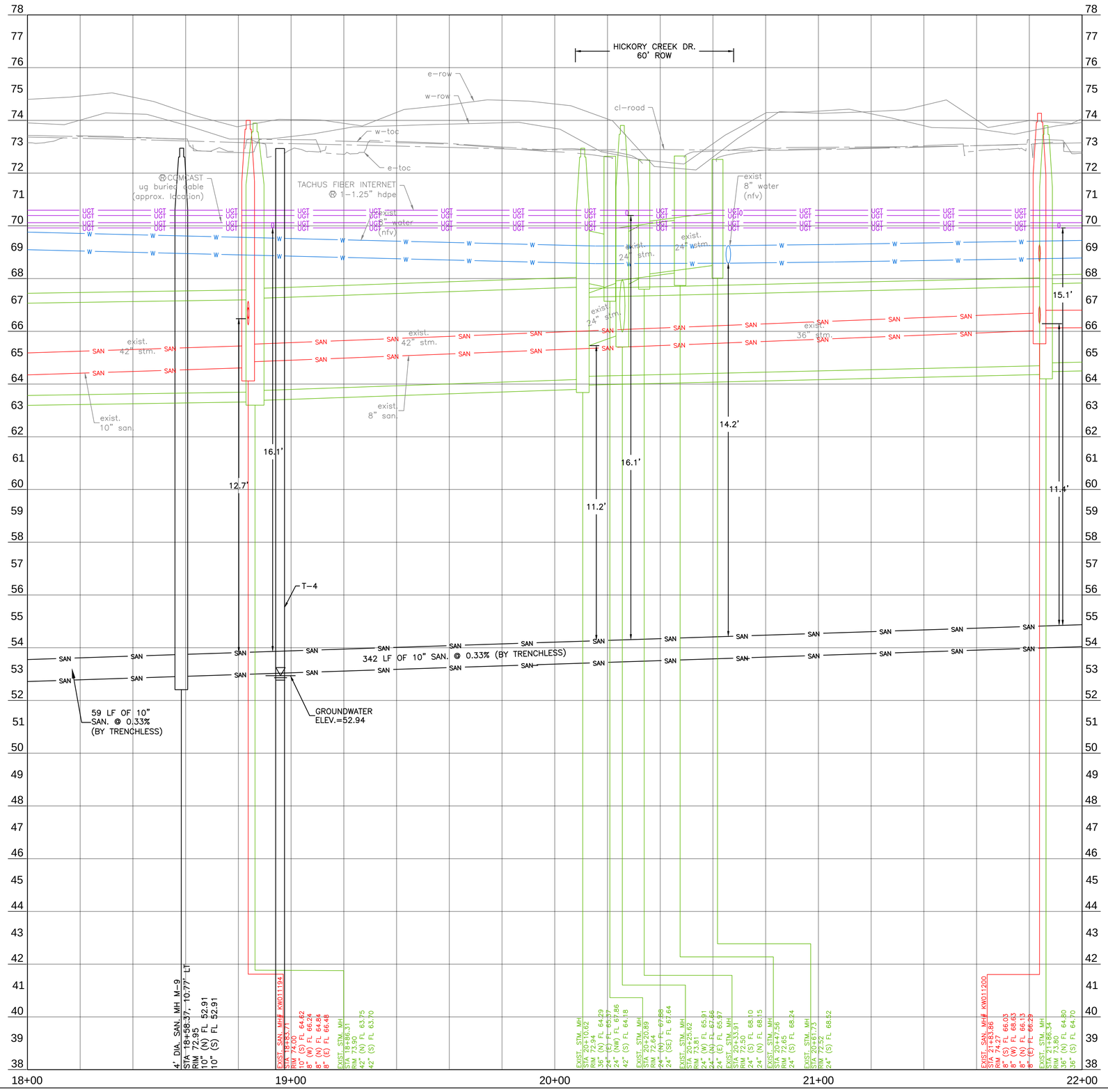

0' 10' 20' 40'
SCALE: 1"=20'
0' 1' 2' 4'
V SCALE: 1"=2'

LEGEND

FREE WATER DURING DRILLING

WATER DEPTH 24 HOURS AFTER DRILLING

rps
A TETRA TECH COMPANY
Texas PE Firm Reg. #F-929
575 N. Dairy Ashford, Suite 700,
Houston, Texas 77079
T +1 281 589 7257
E usinfrastructure@rpsgroup.com

This document is released for the purposes of interim review only under the authority of:

Neha Raval, P.E.
Texas P.E. No. 141506
09/11/2026

It is not to be used for bidding, construction, or permitting purposes.

SURVEYED BY: KUO Inc.
FB NO. F-4578

CITY OF HOUSTON

HOUSTON PUBLIC WORKS

LIFT STATION REHABILITATION & RECONSTRUCTION

TRAILWOOD GRAVITY DIVERSION PROFILE
STA. 18+00 TO STA. 22+00
GS-C-12

WBS NUMBER	FOR CITY OF HOUSTON USE ONLY
R-000267-178A-3	
DRAWING SCALE	
AS NOTED	
CITY OF HOUSTON PM	
TAHA LOTIA	
SHEET NO. 34 OF 147	

FILE PATH: C:\Users\andres.martinezjr\DC\ACCDocs\Tetra Tech Inc\200-317106-24001 COH LS Rehab Design\Project Files\CAD\R-000267-0178A-3\Sheet Files\R-000267-0178A-3-GS-C-12.dwg

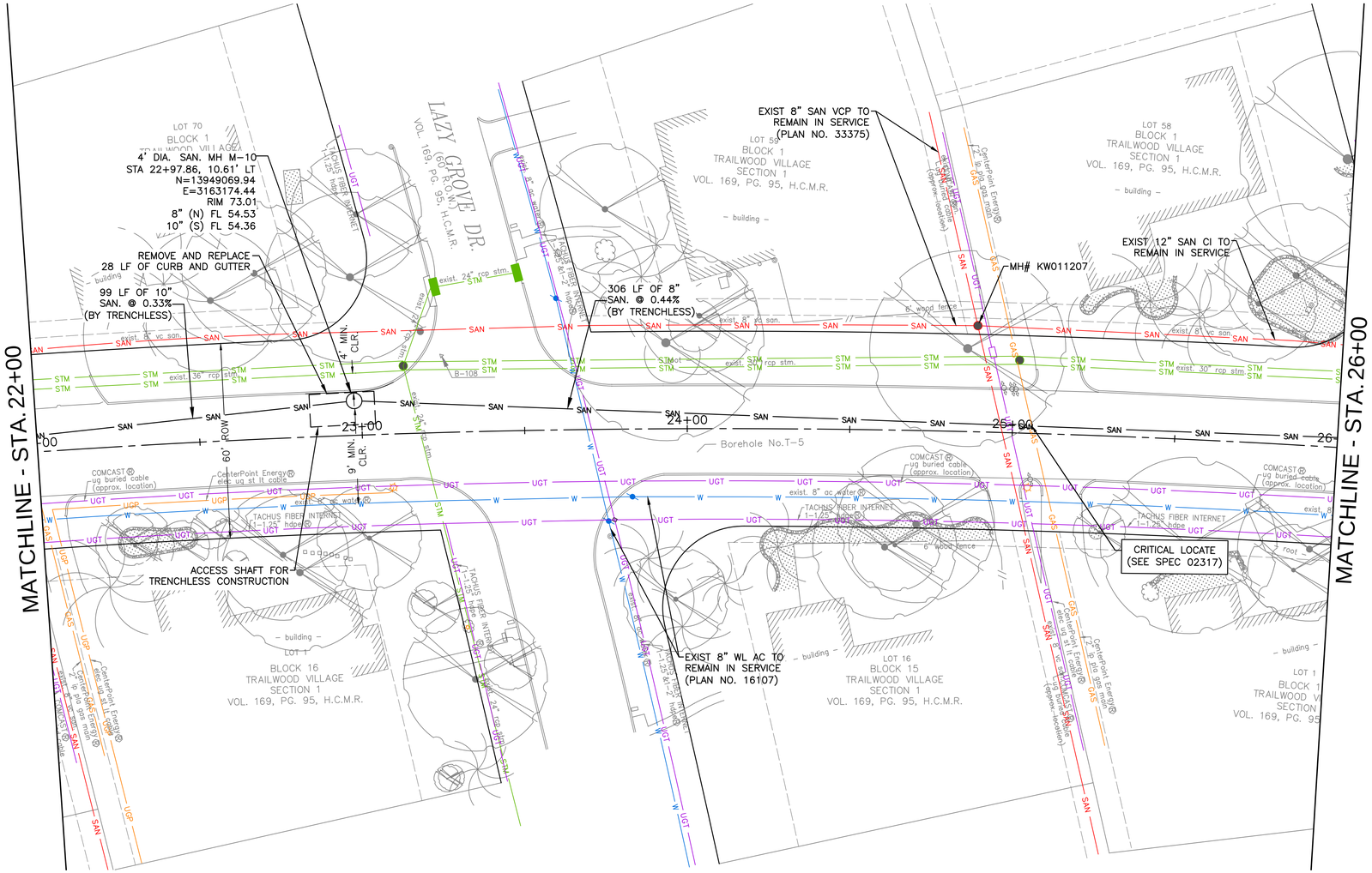

0' 10' 20' 40'

SCALE: 1"=20'

NOTES:
1. WASTE WATER LINE SHOWN ON THIS PLAN SHALL BE CONSTRUCTED BY MEANS OF OPEN CUT CONSTRUCTION UNLESS OTHERWISE STATED.
2. REFER TO TREE PROTECTION PLANS SHEET 41 TO 44 FOR APPROPROATE PROTECTION MEASURES. TREES OUTSIDE OF THE PROJECT LIMITS ARE TO BE PROTECTED AND REMAIN IN PLACE.
3. CONTRACTOR TO PROTECT AND REPLACE DAMAGED PAVEMENT AND CURB DURING SITE RESTORATION.
4. ALL NEW SANITARY MANHOLES SHALL BE 4 FEET DIAMETER MANHOLES, UNLESS SPECIFIED OTHERWISE.
5. ALL PROPOSED MH MUST BE FLUSHED WITH THE PAVEMENT
6. REFER TO COH SPECIFICATION 02426 FOR TRENCHLESS INSTALLATION OF SEWER.
7. ACCESS SHAFT FOR TRENCHLESS CONSTRUCTION 20' BY 10'

TSARP CONVERSION REFERENCE MONUMENT

CITY OF HOUSTON MONUMENT 5770-7302 (ALSO FLOODPLAIN REFERENCE MARK NUMBER 070265) IS AN ALUMINUM DISK STAMPED G 103-38 BM 01 LOCATED ON SOUTH SIDEWALK ON KINGWOOD DRIVE EASTBOUND BRIDGE APPROXIMATELY 1.5 MILES EAST FROM THE INTERSECTION OF US 59 IN KEYMAP 336C IN THE SAN JACINTO RIVER WATERSHED.

PROJECT SITE MONUMENT

ELEV. 74.46 FT (NAVD 1988, 2001 ADJ. – PROJECT DATUM)
ELEV. 74.05 FT (NAVD 1988, (GEOID '18) – OBSERVED BY GPS SURVEYING AND PROCESSED IN REFERENCE TO THE CORS DATED MARCH 18, 2025)

TBM

B-108: SET 'X' CUT ON CONC.,
STA:23+24.99, 23.63LT
ELEV:72.48'

RPS
A TETRA TECH COMPANY
Texas PE Firm Reg. #F-929
575 N. Dairy Ashford, Suite 700,
Houston, Texas 77079
T +1 281 589 7257
E usinfrastructure@rpsgroup.com

SURVEYED BY: KUO Inc.
FB NO. F-4578

This document is released for the purposes of interim review only under the authority of:

Neha Raval, P.E.
Texas P.E. No. 141506
09/11/2026

It is not to be used for bidding, construction, or permitting purposes.

CITY OF HOUSTON
HOUSTON PUBLIC WORKS

LIFT STATION REHABILITATION & RECONSTRUCTION

TRAILWOOD GRAVITY DIVERSION
PLAN STA. 22+00 TO STA. 26+00
GS-C-13

WBS NUMBER	FOR CITY OF HOUSTON USE ONLY
R-000267-178A-3	
DRAWING SCALE	
AS NOTED	
CITY OF HOUSTON PM	
TAHA LOTIA	
SHEET NO. 35 OF 147	

FILE PATH: C:\Users\andres.martinezjr\DC\ACCDocs\Tetra Tech Inc\200-317106-24001 COH LS Rehab Design\Project Files\CAD\R-000267-178A-3-TRAILWOOD GRAVITY DIVERSION STA. 22+00 TO STA. 26+00.dwg

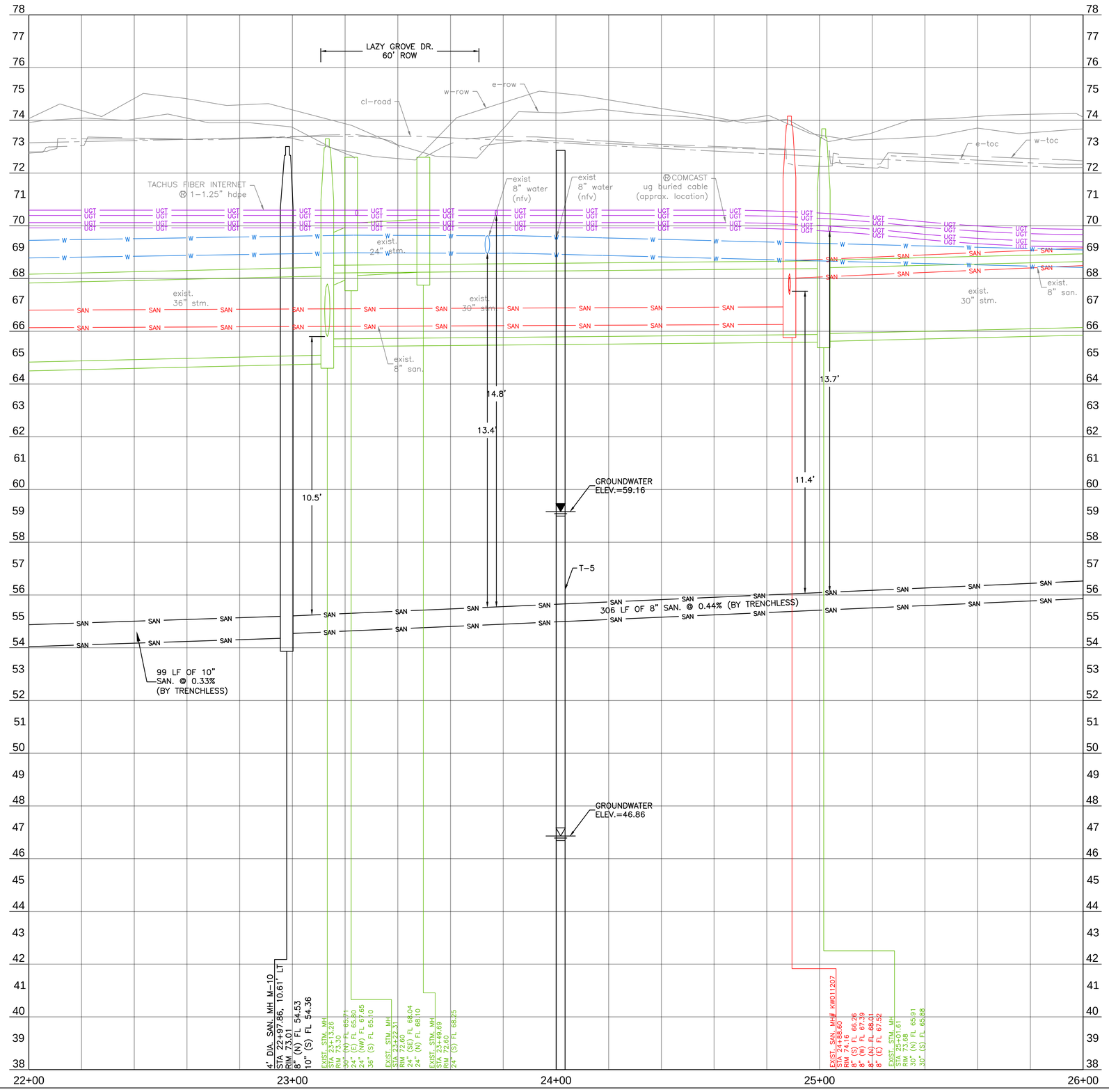

0' 10' 20' 40'
SCALE: 1"=20'
0' 1' 2' 4'
V SCALE: 1"=2'

LEGEND

FREE WATER DURING DRILLING

WATER DEPTH 24 HOURS AFTER DRILLING

rps
A TETRA TECH COMPANY
Texas PE Firm Reg. #F-929
575 N. Dairy Ashford, Suite 700,
Houston, Texas 77079
T +1 281 589 7257
E usinfrastructure@rpsgroup.com

This document is released for the purposes of interim review only under the authority of:

Neha Raval, P.E.
Texas P.E. No. 141506
09/11/2026

It is not to be used for bidding, construction, or permitting purposes.

SURVEYED BY: KUO Inc.
FB NO. F-4578

CITY OF HOUSTON
HOUSTON PUBLIC WORKS

LIFT STATION REHABILITATION & RECONSTRUCTION

TRAILWOOD GRAVITY DIVERSION
PROFILE STA. 22+00 TO STA. 26+00
GS-C-14

WBS NUMBER	FOR CITY OF HOUSTON USE ONLY
R-000267-178A-3	
DRAWING SCALE	
AS NOTED	
CITY OF HOUSTON PM	
TAHA LOTIA	
SHEET NO. 36 OF 147	

FILE PATH: C:\Users\andres.martinezjr\DC\ACCDocs\Tetra Tech Inc\200-317106-24001 COH LS Rehab Design\Project Files\CAD\R-000267-178A-3_GRAVITY DIVERSION 9_3_2026 4_27_08 PM.dwg

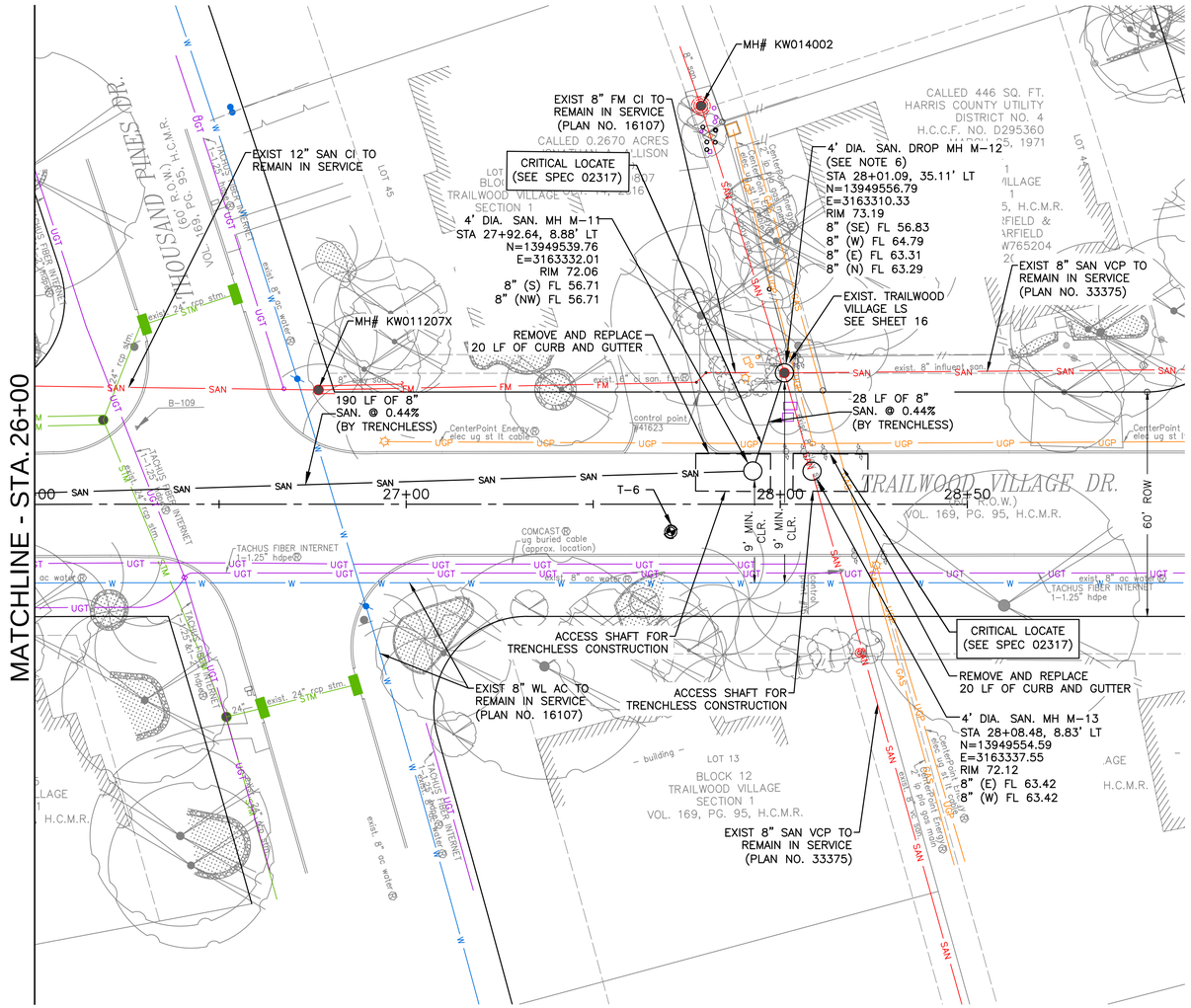

0' 10' 20' 40'

SCALE: 1"=20'

NOTES:
1. WASTE WATER LINE SHOWN ON THIS PLAN SHALL BE CONSTRUCTED BY MEANS OF OPEN CUT CONSTRUCTION UNLESS OTHERWISE STATED.
2. REFER TO TREE PROTECTION PLANS SHEET 41 TO 44 FOR APPROPROATE PROTECTION MEASURES. TREES OUTSIDE OF THE PROJECT LIMITS ARE TO BE PROTECTED AND REMAIN IN PLACE.
3. CONTRACTOR TO PROTECT AND REPLACE DAMAGED PAVEMENT AND CURB DURING SITE RESTORATION.
4. ALL NEW SANITARY MANHOLES SHALL BE 4 FEET DIAMETER MANHOLES, UNLESS SPECIFIED OTHERWISE.
5. ALL PROPOSED MH MUST BE FLUSHED WITH THE PAVEMENT
6. SEE SHEET 84 FOR DROP MH DETAIL 02082-02.
7. REFER TO COH SPECIFICATION 02426 FOR TRENCHLESS INSTALLATION OF SEWER.
8. ACCESS SHAFT FOR TRENCHLESS CONSTRUCTION 20' BY 10'
9. CONTRACTOR TO REFER TO GEOTECHNICAL REPORT FOR SOIL AND GROUNDWATER RELATED INFORMATION.

TSARP CONVERSION REFERENCE MONUMENT

CITY OF HOUSTON MONUMENT 5770-7302 (ALSO FLOODPLAIN REFERENCE MARK NUMBER 070265) IS AN ALUMINUM DISK STAMPED G 103-38 BM 01 LOCATED ON SOUTH SIDEWALK ON KINGWOOD DRIVE EASTBOUND BRIDGE APPROXIMATELY 1.5 MILES EAST FROM THE INTERSECTION OF US 59 IN KEYMAP 336C IN THE SAN JACINTO RIVER WATERSHED.

PROJECT SITE MONUMENT

ELEV. 74.46 FT (NAVD 1988, 2001 ADJ. – PROJECT DATUM)
ELEV. 74.05 FT (NAVD 1988, (GEOID '18) – OBSERVED BY GPS SURVEYING AND PROCESSED IN REFERENCE TO THE CORS DATED MARCH 18, 2025)

TBM

B-109: SET 'X' CUT ON CONC.,
STA:26+28.12, 20.50LT
ELEV:71.65'

RPS
A TETRA TECH COMPANY
Texas PE Firm Reg. #F-929
575 N. Dairy Ashford, Suite 700,
Houston, Texas 77079
T +1 281 589 7257
E usinfrastructure@rpsgroup.com

SURVEYED BY: KUO Inc.
FB NO. F-4578

This document is released for the purposes of interim review only under the authority of:

Neha Raval, P.E.
Texas P.E. No. 141506
09/11/2026

It is not to be used for bidding, construction, or permitting purposes.

CITY OF HOUSTON
HOUSTON PUBLIC WORKS

LIFT STATION REHABILITATION & RECONSTRUCTION

TRAILWOOD GRAVITY DIVERSION
PLAN STA. 26+00 TO STA. 28+50
GS-C-15

WBS NUMBER	FOR CITY OF HOUSTON USE ONLY
R-000267-178A-3	
DRAWING SCALE	
AS NOTED	
CITY OF HOUSTON PM	
TAHA LOTIA	
SHEET NO. 37 OF 147	

FILE PATH: C:\Users\andres.martinezjr\DC\ACCDocs\Tetra Tech Inc\200-317106-24001 COH LS Rehab Design\Project Files\CAD\R-000267-178A-3_TRAILWOOD GRAVITY DIVERSION STA. 26+00 TO STA. 28+50.dwg

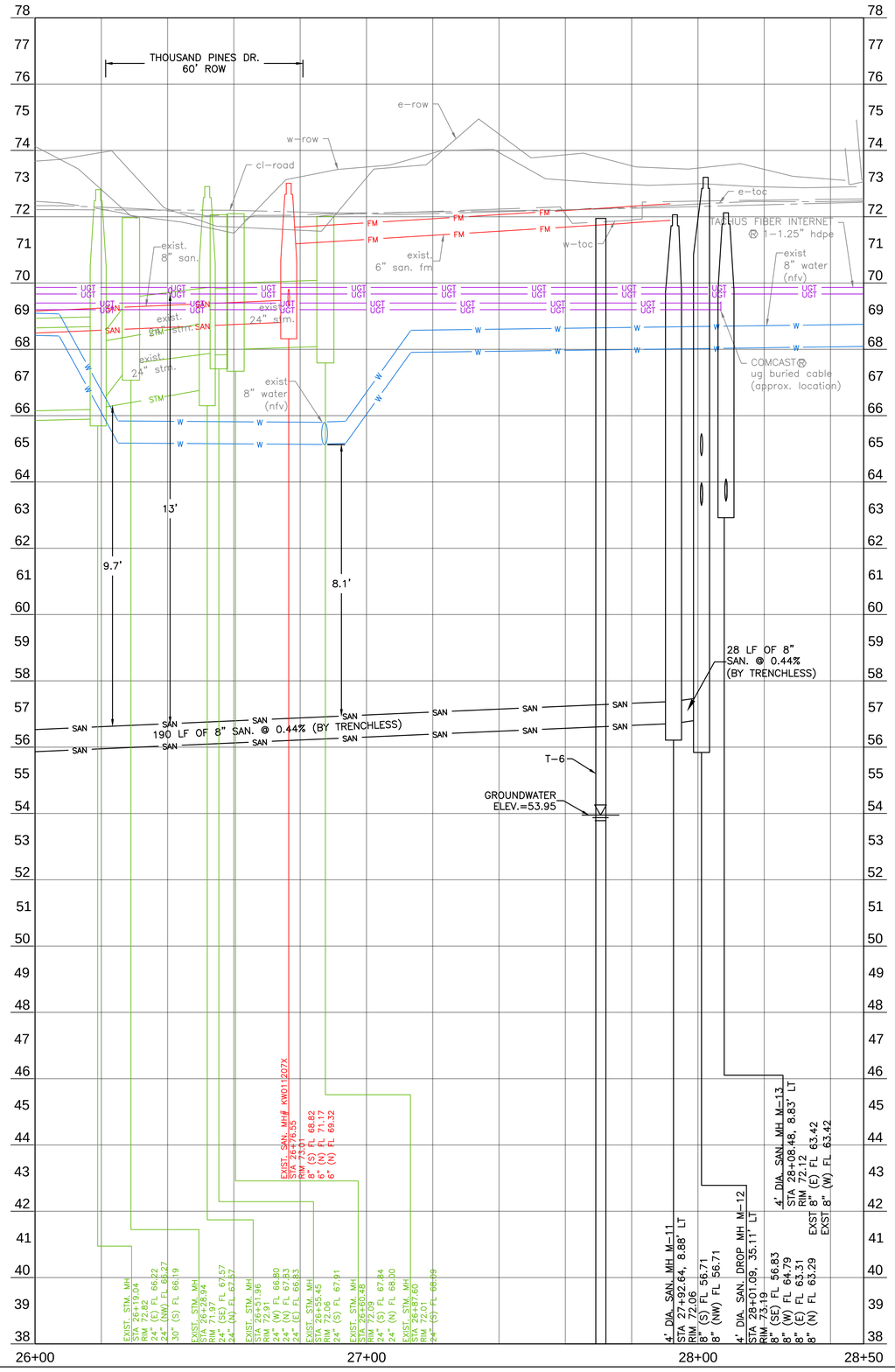

0' 10' 20' 40'
SCALE: 1"=20'
0' 1' 2' 4'
V SCALE: 1"=2'

LEGEND

FREE WATER DURING DRILLING

WATER DEPTH 24 HOURS AFTER DRILLING

RPS
A TETRA TECH COMPANY
Texas PE Firm Reg. #F-929
575 N. Dairy Ashford, Suite 700,
Houston, Texas 77079
T +1 281 589 7257
E usinfrastructure@rpsgroup.com

SURVEYED BY: KUO Inc.
FB NO. F-4578

This document is released for the purposes of interim review only under the authority of:

Neha Raval, P.E.
Texas P.E. No. 141506
09/11/2026

It is not to be used for bidding, construction, or permitting purposes.

CITY OF HOUSTON
HOUSTON PUBLIC WORKS

LIFT STATION REHABILITATION & RECONSTRUCTION

TRAILWOOD GRAVITY DIVERSION
PROFILE STA. 26+00 TO STA. 28+50
GS-C-16

WBS NUMBER	FOR CITY OF HOUSTON USE ONLY
R-000267-178A-3	
DRAWING SCALE	
AS NOTED	
CITY OF HOUSTON PM	
TAHA LOTIA	
SHEET NO. 38 OF 147	

FILE PATH: C:\Users\andres.martinezjr\DC\ACCDocs\Tetra Tech Inc\200-3177106-24001 COH LS Rehab Design\Project Files\CAD\R-000267-01[illegible] 9/11/2026 4:57:10 PM CDT

NOTES:
1. REFER TO SHEET 69 FOR SWPPP NEAR HCFCD CHANNEL.

LEGEND

- RFB — REINFORCED FILTER FABRIC BARRIER
- IPB — INLET PROTECTION BARRIER
- SCA — STABILIZED CONSTRUCTION ACCESS
- CTW — CONCRETE TRUCK WASHOUT AREA

RPS A TETRA TECH COMPANY
Texas PE Firm Reg. #F-929
575 N. Dairy Ashford, Suite 700,
Houston, Texas 77079
T +1 281 589 7257
E usinfrastructure@rpsgroup.com

SURVEYED BY: KUO Inc.
FB NO. F-4578

This document is released for the purposes of interim review only under the authority of:

Neha Raval, P.E.
Texas P.E. No. 141506
09/11/2026

It is not to be used for bidding, construction, or permitting purposes.

CITY OF HOUSTON
HOUSTON PUBLIC WORKS

LIFT STATION REHABILITATION & RECONSTRUCTION

STORM WATER POLLUTION PREVENTION PLAN (SWPPP)
GS-C-17

WBS NUMBER	FOR CITY OF HOUSTON USE ONLY
R-000267-178A-3	
DRAWING SCALE	
AS NOTED	
CITY OF HOUSTON PM	
TAHA LOTIA	
SHEET NO. 39 OF 147	

FILE PATH: C:\Users\andres.martinezjr\DC\ACCDocs\Tetra Tech Inc\200-317106-24001 COH LS Rehab Design\Project Files\CAD\R-000267-178A-3_SWPPP_POLLUPCNT_TEBE (4/1/2026 2:18:55 PM) (SWPPP).dwg

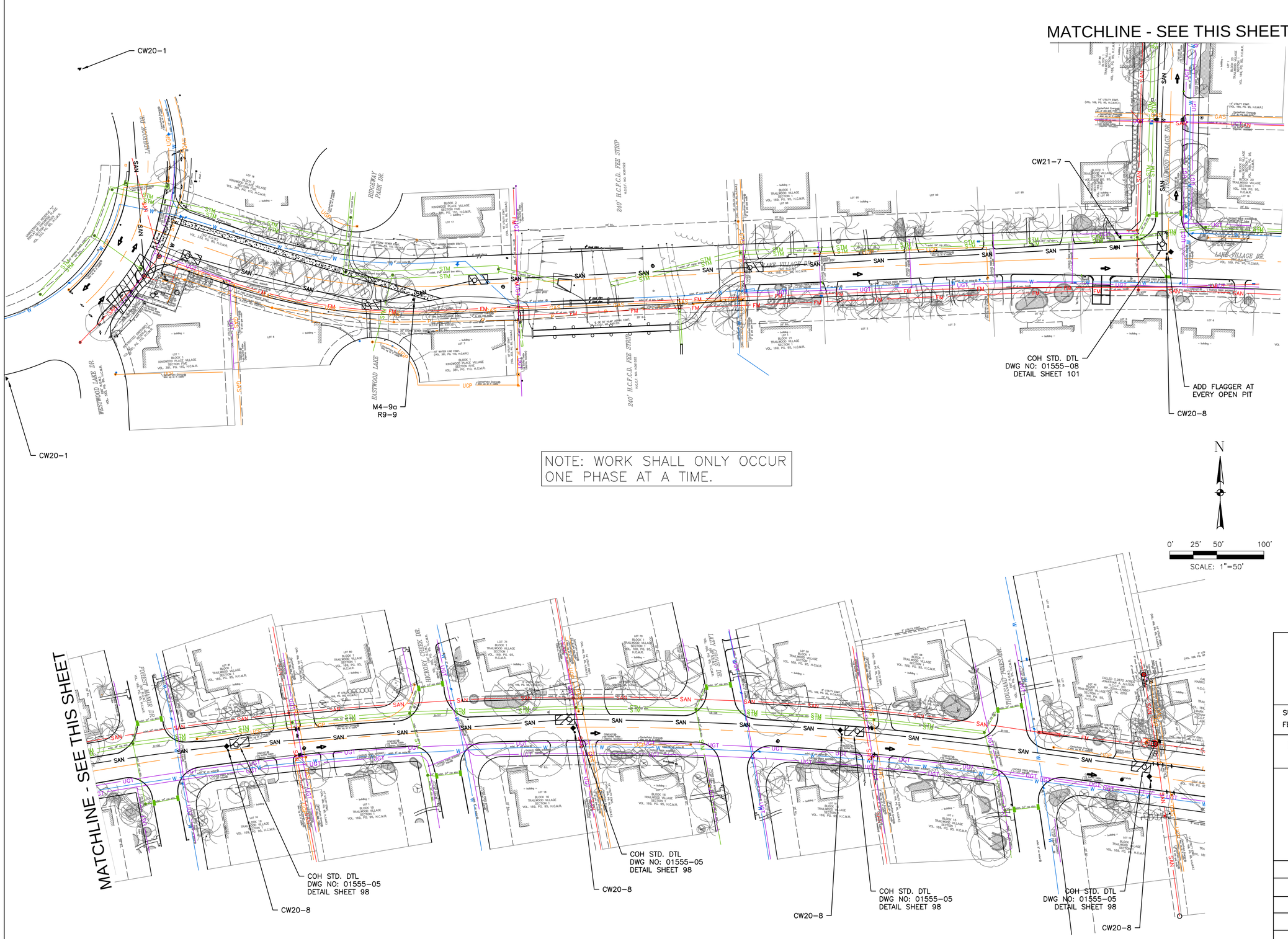

LEGEND:

ROAD WORK AHEAD — CW20-1	SLOW — CW20-8
DETOUR — M4-9a	SIDEWALK CLOSED — R9-9
UTILITY WORK AHEAD — CW21-7	

WORK ZONE

FLAGGER

NOTES:
1. CONTRACTOR TO COORDINATE DRIVEWAY CLOSURES WITH EACH PROPERTY OWNER AT LEAST TWO WEEKS BEFORE STARTING CONSTRUCTION.
2. ALL DRIVEWAYS TO BE OPEN BY END OF EACH DAY.
3. CONTRACTOR TO ONLY CONSTRUCT ONE PHASE AT A TIME
4. CONTRACTOR TO MAINTAIN A MINIMUM OF 20' OF ROADWAY OPEN AT ALL TIMES.
5. CONTRACTOR TO COORDINATE PEDESTRIAN DETOURS WITH AFFECTED PROPERTY OWNERS.
6. PROVIDE BARRICADES AROUND ANY OPENINGS THAT CANNOT BE CLOSED AT THE END OF EACH DAY. OPENINGS IN PAVED AREAS TO BE COVERED WITH ROAD PLATES OR SIMILAR APPROVED ITEM BY ENGINEER OF RECORD.
7. CONTRACTOR MUST FOLLOW WORKING TIMES PROVIDED IN SPECIFICATION 01110.

TPS A TETRA TECH COMPANY
Texas PE Firm Reg. #F-929
575 N. Dairy Ashford, Suite 700,
Houston, Texas 77079
T +1 281 589 7257
E usinfrastructure@rpsgroup.com

This document is released for the purposes of interim review only under the authority of:

Jeremy Austin, P.E.
Texas P.E. No. 116816
09/11/2026

It is not to be used for bidding, construction, or permitting purposes.

SURVEYED BY: KUO Inc.
FB NO. F-4578

CITY OF HOUSTON
HOUSTON PUBLIC WORKS

LIFT STATION REHABILITATION & RECONSTRUCTION

TRAFFIC CONTROL PHASING PLAN
GS-C-18

WBS NUMBER	FOR CITY OF HOUSTON USE ONLY
R-000267-178A-3	
DRAWING SCALE	
AS NOTED	
CITY OF HOUSTON PM	
TAHA LOTIA	
SHEET NO. 40 OF 147	

FILE PATH: C:\Users\andres.martinezjr\DC\ACCDocs\Tetra Tech Inc\200-317106-24001 COH LS Rehab Design\Project Files\CAD\R-000267-178A-3_GS-C-18.dwg PLOTTED: 9/9/2026 4:58 PM

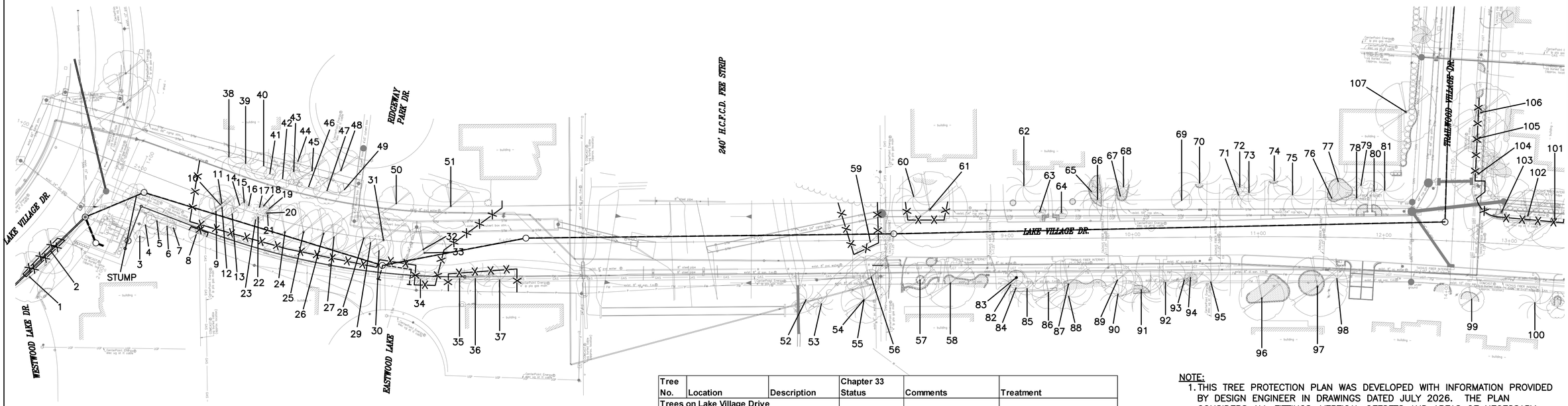

Tree No.	Location	Description	Chapter 33 Status	Comments	Treatment
Trees on Lake Village Drive					
1	1802 Ladbrook	20" Live Oak	Protected		Fence
2	1802 Ladbrook	23" Live Oak	Protected	30% dieback	Fence
3	1802 1/2 Lake Village	12" Crepe Myrtle	Not protected	Topped	
4	1802 1/2 Lake Village	12" Crepe Myrtle	Not protected	Topped	
5	1802 1/2 Lake Village	12" Crepe Myrtle	Not protected	Topped	
6	1802 1/2 Lake Village	12" Crepe Myrtle	Not protected	Topped	
7	1802 1/2 Lake Village	12" Crepe Myrtle	Not protected	Topped	
8	1802 1/2 Lake Village	5" Water Oak	Protected		Fence
9	Public Right of Way	15" Sweet Gum	Protected		Trenchless construction, Fence
10	Public Right of Way	12" Sweet Gum	Protected		Trenchless construction, Fence
11	Public Right of Way	14" Sweet Gum	Protected		Trenchless construction, Fence
12	Not used				Trenchless construction, Fence
13	Public Right of Way	5" Winged Elm	Protected		Trenchless construction, Fence
14	Public Right of Way	5" Water Oak	Protected		Trenchless construction, Fence
15	Public Right of Way	4" Pine	Protected		Trenchless construction, Fence
16	Public Right of Way	4" Pine	Protected		Trenchless construction, Fence
17	Public Right of Way	9" Pine	Protected		Trenchless construction, Fence
18	Public Right of Way	11" Pine	Protected		Trenchless construction, Fence
19	Public Right of Way	14" Pine	Protected		Trenchless construction, Fence
20	Public Right of Way	3" Pine	Protected		Trenchless construction, Fence
21	Public Right of Way	3" Pine	Protected		Trenchless construction, Fence
22	Public Right of Way	8" Pine	Protected		Trenchless construction, Fence
23	Public Right of Way	6" Pine	Protected		Trenchless construction, Fence
24	Public Right of Way	13" Hawthorn	Protected		Trenchless construction, Fence
25	Public Right of Way	17" Tallow	Not protected		
26	Public Right of Way	17" Water Oak	Protected		Trenchless construction, Fence
27	Public Right of Way	10" Water Oak	Protected		Trenchless construction, Fence
28	Public Right of Way	18" Water Oak	Protected		Trenchless construction, Fence
29	Public Right of Way	5" Water Oak	Protected		Trenchless construction, Fence
30	Public Right of Way	5" Tallow	Not protected		
31	Public Right of Way	19" Willow Oak	Protected		Fence, Root prune
32	Public Right of Way	15" Willow Oak	Protected		Fence, Root prune
33	Public Right of Way	17" Willow Oak	Protected		Fence, Root prune
34	1914 Eastwood	13" Pine	Protected	Pruned by CPE	Fence
35	1914 Eastwood	13" Pine	Protected	Pruned by CPE	Fence
36	1914 Eastwood	18" Pine	Protected	Pruned by CPE	Fence
37	1914 Eastwood	17" Pine	Protected	Pruned by CPE	Fence
38	2003 Ridgeway Park	19" Pine	Not protected	Private tree	
39	2003 Ridgeway Park	16" Pine	Not protected	Private tree	
40	2003 Ridgeway Park	15" Crepe Myrtle	Not protected	Topped, Private tree	
41	2003 Ridgeway Park	3" Crepe Myrtle	Not protected	Topped, Private tree	
42	2003 Ridgeway Park	10" Crepe Myrtle	Not protected	Topped, Private tree	
43	2003 Ridgeway Park	19" Pine	Not protected	Private tree	
44	2003 Ridgeway Park	18" Pine	Not protected	Private tree	
45	2003 Ridgeway Park	11" Tallow	Not protected	Private tree	
46	2003 Ridgeway Park	8" Crepe Myrtle	Not protected	Private tree	
47	2003 Ridgeway Park	8" Crepe Myrtle	Not protected	Private tree	
48	2003 Ridgeway Park	16" Green Ash	Protected	Not impacted	
49	2003 Ridgeway Park	6" Live Oak	Protected	70% dieback, Not impacted	
50	2002 Ridgeway Park	12" Willow Oak	Protected		Fence

Tree No.	Location	Description	Chapter 33 Status	Comments	Treatment
Trees on Lake Village Drive					
51	2002 Ridgeway Park	15" Willow Oak	Protected		Fence
52	HCCF No. H361522	18" Pine	Not protected	Not impacted	
53	HCCF No. H361522	14" Pine	Not protected	Not impacted	
54	HCCF No. H361522	24" Pine	Not protected	Topped by CPE	
55	HCCF No. H361522	14" Willow Oak	Not protected	Not impacted	
56	HCCF No. H361522	8" Yaupon	Not protected	Not impacted	
57	1902 Lake Village	14" Big Tooth Maple	Not protected	Private tree	
58	1902 Lake Village	17" Bald Cypress	Not protected	Private tree	
59	HCCF No. H361522	13" Pine	Not protected	Pruned by CPE	Trenchless construction, Fence
60	1903 Lake Village	23" Pine	Protected	Corridor Tree	Fence
61	1903 Lake Village	32" Willow Oak	Protected		Fence
62	1907 Lake Village	23" Pine	Protected	Corridor tree, Not impacted	
63	1907 Lake Village	5" Crepe Myrtle	Not protected	Topped	
64	1907 Lake Village	5" Crepe Myrtle	Not protected	Topped	
65	1907 Lake Village	21" Pine	Protected	Corridor tree, Not impacted	
66	1911 Lake Village	22" Pine	Protected	Corridor tree, Not impacted	
67	1911 Lake Village	24" Pine	Protected	Corridor tree, Not impacted	
68	1911 Lake Village	20" Pine	Protected	Corridor tree, Not impacted	
69	1911 Lake Village	7" Red Maple	Not protected	Private tree	
70	1911 Lake Village	25" Pine	Protected	Corridor tree, Not impacted	
71	1915 Lake Village	16" Pine	Not protected	Private tree	
72	1915 Lake Village	23" Pine	Protected	Corridor tree, Not impacted	
73	1915 Lake Village	20" Pine	Protected	Corridor tree, Not impacted	
74	1915 Lake Village	18" Pine	Not protected	Private tree	
75	1915 Lake Village	23" Pine	Protected	Corridor tree, Not impacted	
76	1919 Lake Village	20" Pine	Protected	Corridor tree, Not impacted	
77	1919 Lake Village	22" Pine	Protected	Corridor tree, Not impacted	
78	1919 Lake Village	17" Pine	Not protected	Private tree	
79	1919 Lake Village	11" Pine	Not protected	Private tree	
80	1919 Lake Village	11" Pine	Not protected	Private tree	
81	1919 Lake Village	25" Pine	Protected	Corridor tree, Not impacted	
82	1906 Lake Village	14" Pine	Not protected	Private tree	
83	1906 Lake Village	5" Crepe Myrtle	Not protected	Private tree	
84	1906 Lake Village	16" Pine	Not protected	Private tree	
85	1906 Lake Village	24" Pine	Protected	Corridor tree, Not impacted	
86	1906 Lake Village	13" Magnolia	Not protected	Private tree	
87	1906 Lake Village	18" Water Oak	Not protected	Private tree	
88	1906 Lake Village	25" Pine	Protected	Corridor tree, Not impacted	
89	1910 Lake Village	13" Willow Oak	Not protected	Private tree	
90	1910 Lake Village	17" Pine	Not protected	Private tree	
91	1910 Lake Village	26" Pine	Protected	Corridor tree, Not impacted	
92	1910 Lake Village	18" Pine	Not protected	Private tree	
93	1910 Lake Village	21" Pine	Protected	Corridor tree, Not impacted	
94	1910 Lake Village	3' Sago	Not protected	Private tree	
95	1910 Lake Village	18" Pine	Not protected	Private tree	
96	1914 Lake Village	21" Magnolia	Protected	Corridor tree, Not impacted	
97	1914 Lake Village	20" Live Oak	Protected	Corridor tree, Not impacted	
98	1918 Lake Village	21" Pine	Protected	Corridor tree, Not impacted	
99	2002 Lake Village	8" Ligustrum	Not protected	Private tree	
100	2002 Lake Village	22" Pine	Protected	Corridor tree, Not impacted	
101	2002 Lake Village	22" Live Oak	Protected		Fence
102	2003 Lake Village	17" Live Oak	Protected		Fence
103	2003 Lake Village	28" Live Oak	Protected		Clearance prune, Fence

NOTE:

1. THIS TREE PROTECTION PLAN WAS DEVELOPED WITH INFORMATION PROVIDED BY DESIGN ENGINEER IN DRAWINGS DATED JULY 2026. THE PLAN CONSIDERS ALL FITTINGS, VERTICAL OFFSETS AND AREAS OF NECESSARY EXCAVATION. CHANGES MADE TO DESIGN MAY COMPROMISE THE TREE PROTECTION PLAN. REFER SPECIFICATIONS 01562 AND 02915.
2. CN KOEHL URBAN FORESTRY, INC. HAS NOT BEEN CONTRACTED TO COMPLETE ANY TREE RISK ASSESSMENTS ON THIS PROJECT–THIS TPP INCLUDES PROTECTION MEASURES FOR SPECIES OF TREES PROTECTED BY APPLICABLE ORDINANCE ONLY. CN KOEHL URBAN FORESTRY, INC. DOES NOT GUARANTEE CONDITION OR STRUCTURAL INTEGRITY OF ANY TREE LOCATED ON OR ADJACENT TO THIS PROJECT.
3. IN AREAS WHERE INDIVIDUAL TREES HAVE NOT BEEN TIED IN BY SURVEY, APPROXIMATE LOCATION IS INDICATED ON TPP WITH A DOT AND TREE NUMBER. ACCURACY OF REPRESENTED LOCATION IS NOT GUARANTEED BY CN KOEHL URBAN FORESTRY, INC.

TREE PRESERVATION PLAN LEGEND

- 1 — TREE NUMBER/LOCATION
- (1) — TREE TO BE REMOVED
- —X— TREE PROTECTION FENCE
- ROOT PRUNING TRENCH

N

40 0 40 80

SCALE: 1"=40'

NO.	DATE	REVISION	APP.

C.N. Koehl
Urban Forestry, Inc.
210 Stone Bush Ct. ◦ Katy, Texas 77493
281-391-0022 ckoehl@koehlurbanforestry.com
APPROVED:

RPS A TETRA TECH COMPANY
Texas PE Firm Reg. #F-929
575 N. Dairy Ashford, Suite 700,
Houston, Texas 77079
T +1 281 589 7257
E usinfrastructure@rpsgroup.com

SURVEYED BY: KUO Inc.
FB NO. 000000

CITY OF HOUSTON
HOUSTON PUBLIC WORKS

RECONSTRUCTION & REHABILITATION
COH LIFT STATIONS

TREE PROTECTION PLAN
GS-C-19

SHEET 1 OF 4

WBS NUMBER	FOR CITY OF HOUSTON USE ONLY
R-000267-178A-3	
DRAWING SCALE	
AS NOTED	
CITY OF HOUSTON PM	
TAHA LOTIA, P.E.	
SHEET NO. 41 OF 147	

PLOTTED: 8/5/2026 1:58 PM
FILE PATH: C:\Users\nedb\OneDrive - Gulf Interstate Engineering Company\desktop\INFO\RPS TRAILWOOD\RPS LIFT STATION 0178 TP-1.dwg PLOT STYLE: COH.ctb

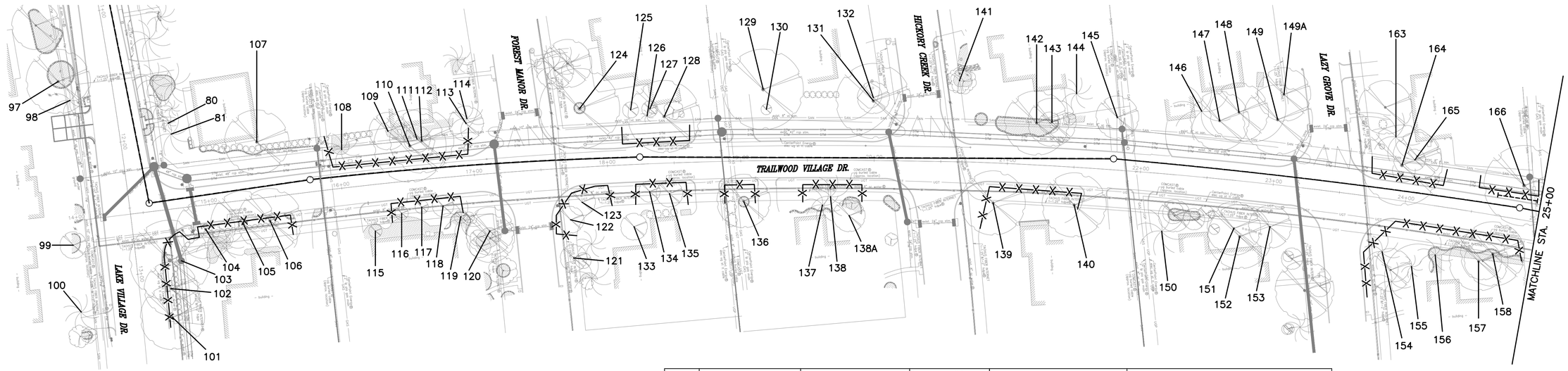

Tree No.	Location	Description	Chapter 33 Status	Comments	Treatment
Trees on Trailwood Village Drive					
104	2003 Lake Village	20" Live Oak	Protected		Clearance prune, Fence
105	2003 Lake Village	20" Live Oak	Protected		Clearance prune, Fence
106	2003 Lake Village	21" Live Oak	Protected		Fence
107	1919 Lake Village	21" Water Oak	Protected	Corridor tree, Not impacted	
108	1918 Forest Manor	22" Pine	Protected		Fence
109	1918 Forest Manor	14" Cherrybark Oak	Not protected	Private tree	
110	1918 Forest Manor	27" Arizona Ash	Protected	Trunk decay	Clearance prune, Fence
111	1918 Forest Manor	10" Cherrybark Oak	Protected		Fence
112	1918 Forest Manor	23" Water Oak	Protected		Fence
113	1918 Forest Manor	15" Water Oak	Not protected	Private tree	
114	1918 Forest Manor	24" Pine	Protected	Corridor Tree	Fence
115	2002 Forest Manor	5" Magnolia	Not protected	Private tree	
116	2002 Forest Manor	5" Sweetgum	Protected		Fence
117	2002 Forest Manor	5" Sweetgum	Protected		Fence
118	2002 Forest Manor	9" Water Oak	Protected		Fence
119	2002 Forest Manor	21" Pine	Protected	Corridor Tree	Fence
120	2002 Forest Manor	18" Sweetgum	Not protected	Private tree	
121	2003 Forest Manor	10" Arizona Ash	Not protected		
122	2003 Forest Manor	9" Shumard Oak	Protected		Fence
123	2003 Forest Manor	11" Shumard Oak	Protected		Fence
124	1919 Forest Manor	25" Cherrybark Oak	Protected	Corridor tree, Not impacted	
125	1919 Forest Manor	3" Vitex	Not protected	Private tree	
126	1919 Forest Manor	4' Sago	Not protected	Private tree	
127	1919 Forest Manor	5" Yaupon	Not protected	Private tree	
128	1919 Forest Manor	24" Willow Oak	Protected	Corridor Tree	Clearance prune, Fence
129	1918 Hickory Creek	27" Cherrybark oak	Protected	Corridor tree, Not impacted	
130	1918 Hickory Creek	2" Citrus	Not protected	Private tree	
131	1918 Hickory Creek	25" Sweetgum	Protected	Corridor tree, Not impacted	
132	1918 Hickory Creek	11" Winged Elm	Not protected	Private tree	
133	2003 Forest Manor	10" Live Oak	Not protected	Private tree	

Tree No.	Location	Description	Chapter 33 Status	Comments	Treatment
Trees on Trailwood Village Drive					
134	2003 Forest Manor	9" Hackberry	Not protected		
135	2003 Forest Manor	10" Cherrybark Oak	Protected		Fence
136	2002 Hickory Creek	15" Post Oak	Protected	Trunk cavity	Fence
137	2002 Hickory Creek	19" Pine	Not protected	Private tree	
138	2002 Hickory Creek	22" Pine	Protected		Fence
138A	2002 Hickory Creek	12" Post Oak	Not protected	Private tree	
139	2003 Hickory Creek	22" Post Oak	Protected	40% dieback	Fence
140	2003 Hickory Creek	22" Cherrybark Oak	Protected		Clearance prune, Fence
141	1919 Hickory Creek	5" Crepe Myrtle	Not protected		
142	1919 Hickory Creek	22" Willow Oak	Protected	Corridor tree, Not impacted	
143	1919 Hickory Creek	16" Bradford Pear	Not protected	Private tree	
144	1919 Hickory Creek	20" Pine	Protected	Corridor tree, Not impacted	
145	1919 Hickory Creek	14" Sweetgum	Not protected	Private tree	
146	1922 Lazy Grove	30" Pine	Protected	Corridor tree, Not impacted	
147	1922 Lazy Grove	22" Sweetgum	Protected	Corridor tree, Not impacted	
148	1922 Lazy Grove	18" Cherrybark Oak	Protected	Corridor tree, Not impacted	
149	1922 Lazy Grove	23" Sweetgum	Protected	Corridor tree, Not impacted	
149A	1922 Lazy Grove	17" Live Oak	Protected	Not impacted	
150	2002 Lazy Grove	24" Pine	Protected	Corridor tree, Not impacted	
151	2002 Lazy Grove	19" Water Oak	Not protected	Private tree	
152	2002 Lazy Grove	22" Cherrybark Oak	Protected	Corridor tree, Not impacted	
153	2002 Lazy Grove	16" Sweetgum	Not protected	Private tree	
154	2003 Lazy Grove	19" Pine	Protected		Fence
155	2003 Lazy Grove	12" Pine	Not protected	Private tree	
156	2003 Lazy Grove	20" Pine	Protected	Corridor Tree	Fence
157	2003 Lazy Grove	18" Post Oak	Not protected	Private tree	
158	2003 Lazy Grove	24" Post Oak	Protected	Corridor Tree	Fence
163	1923 Lazy Grove	24" Pine	Protected	Corridor tree, Not impacted	
164	1923 Lazy Grove	23" Water Oak	Protected		Fence
165	1923 Lazy Grove	9" Magnolia	Protected		Fence
166	1923 Lazy Grove	25" Cherrybark Oak	Protected		Fence, Root prune for manhole, Clearance prune

N

40 0 40 80

SCALE: 1"=40'

TREE PRESERVATION PLAN LEGEND

- 1 — TREE NUMBER/LOCATION
- ① — TREE TO BE REMOVED
- —X— TREE PROTECTION FENCE
- ----- ROOT PRUNING TRENCH

NOTE:

1. THIS TREE PROTECTION PLAN WAS DEVELOPED WITH INFORMATION PROVIDED BY DESIGN ENGINEER IN DRAWINGS DATED JULY 2026. THE PLAN CONSIDERS ALL FITTINGS, VERTICAL OFFSETS AND AREAS OF NECESSARY EXCAVATION. CHANGES MADE TO DESIGN MAY COMPROMISE THE TREE PROTECTION PLAN. REFER SPECIFICATIONS 01562 AND 02915.
2. CN KOEHL URBAN FORESTRY, INC. HAS NOT BEEN CONTRACTED TO COMPLETE ANY TREE RISK ASSESSMENTS ON THIS PROJECT–THIS TPP INCLUDES PROTECTION MEASURES FOR SPECIES OF TREES PROTECTED BY APPLICABLE ORDINANCE ONLY. CN KOEHL URBAN FORESTRY, INC. DOES NOT GUARANTEE CONDITION OR STRUCTURAL INTEGRITY OF ANY TREE LOCATED ON OR ADJACENT TO THIS PROJECT.
3. IN AREAS WHERE INDIVIDUAL TREES HAVE NOT BEEN TIED IN BY SURVEY, APPROXIMATE LOCATION IS INDICATED ON TPP WITH A DOT AND TREE NUMBER. ACCURACY OF REPRESENTED LOCATION IS NOT GUARANTEED BY CN KOEHL URBAN FORESTRY, INC.

NO.	DATE	REVISION	APP.

C.N. Koehl
Urban Forestry, Inc.
210 Stone Bush Ct. ◦ Katy, Texas 77493
281-391-0022 ckoehl@koehlurbanforestry.com

APPROVED:

RPS A TETRA TECH COMPANY
Texas PE Firm Reg. #F-929
575 N. Dairy Ashford, Suite 700, Houston, Texas 77079
T +1 281 589 7257
E usinfrastructure@rpsgroup.com

SURVEYED BY: KUO Inc.
FB NO. 000000

CITY OF HOUSTON
HOUSTON PUBLIC WORKS

RECONSTRUCTION & REHABILITATION
COH LIFT STATIONS

TREE PROTECTION PLAN
GS-C-20

SHEET 2 OF 4

WBS NUMBER	FOR CITY OF HOUSTON USE ONLY
R-000267-178A-3	
DRAWING SCALE	
AS NOTED	
CITY OF HOUSTON PM	
TAHA LOTIA, P.E.	
SHEET NO. 42 OF 147	

PLOTTED: 8/5/2026 1:58 PM
FILE PATH: C:\Users\nedb\OneDrive - Gulf Interstate Engineering Company\desktop\INFO\RPS TRAILWOOD\RPS LIFT STATION 0178 TP-2.dwg PLOT STYLE: CNKoehl.ctb

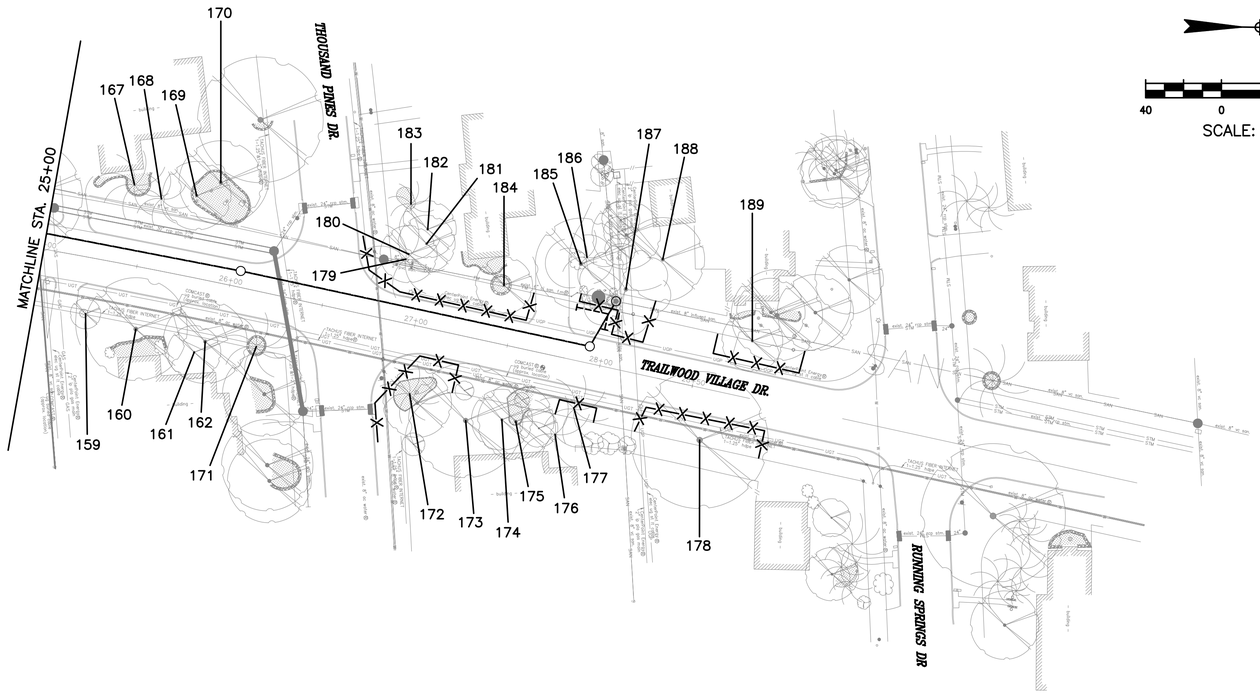

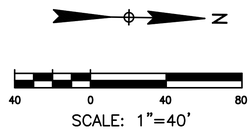

TREE PRESERVATION PLAN LEGEND

1	TREE NUMBER/LOCATION
①	TREE TO BE REMOVED
—X—	TREE PROTECTION FENCE
⊢----⊣	ROOT PRUNING TRENCH

NOTE:

1. THIS TREE PROTECTION PLAN WAS DEVELOPED WITH INFORMATION PROVIDED BY DESIGN ENGINEER IN DRAWINGS DATED JULY 2026. THE PLAN CONSIDERS ALL FITTINGS, VERTICAL OFFSETS AND AREAS OF NECESSARY EXCAVATION. CHANGES MADE TO DESIGN MAY COMPROMISE THE TREE PROTECTION PLAN. REFER SPECIFICATIONS 01562 AND 02915.
2. CN KOEHL URBAN FORESTRY, INC. HAS NOT BEEN CONTRACTED TO COMPLETE ANY TREE RISK ASSESSMENTS ON THIS PROJECT–THIS TPP INCLUDES PROTECTION MEASURES FOR SPECIES OF TREES PROTECTED BY APPLICABLE ORDINANCE ONLY. CN KOEHL URBAN FORESTRY, INC. DOES NOT GUARANTEE CONDITION OR STRUCTURAL INTEGRITY OF ANY TREE LOCATED ON OR ADJACENT TO THIS PROJECT.
3. IN AREAS WHERE INDIVIDUAL TREES HAVE NOT BEEN TIED IN BY SURVEY, APPROXIMATE LOCATION IS INDICATED ON TPP WITH A DOT AND TREE NUMBER. ACCURACY OF REPRESENTED LOCATION IS NOT GUARANTEED BY CN KOEHL URBAN FORESTRY, INC.

NO.	DATE	REVISION	APP.

Tree No.	Location	Description	Chapter 33 Status	Comments	Treatment
Trees on Trailwood Village Drive					
159	2002 Thousand Pines	3" Citrus	Not protected		
160	2002 Thousand Pines	23" Post Oak	Protected	Corridor tree, Not impacted	
161	2002 Thousand Pines	12" Sweetgum	Not protected	Private tree	
162	2002 Thousand Pines	18" Sweetgum	Not protected	Private tree, Broken top	
167	1926 Thousand Pines	28" Pine	Protected	Private tree, Heart rot	
168	1926 Thousand Pines	24" Pine	Protected	Corridor tree, Not impacted	
169	1926 Thousand Pines	18" Cherrybark Oak	Not protected	Private tree	
170	1926 Thousand Pines	21" Cherrybark Oak	Protected	Corridor tree, Not impacted	
171	2002 Thousand Pines	23" Pine	Protected	Not impacted	
172	2003 Thousand Pines	22" Pine	Protected		Fence
173	2003 Thousand Pines	24" Cherrybark Oak	Protected	Corridor tree, Not impacted	
174	2003 Thousand Pines	14" Sweetgum	Not protected	Private tree	
175	2003 Thousand Pines	19" Sweetgum	Not protected	Private tree	
176	2003 Thousand Pines	29" Pine	Protected	Private tree, Heart rot	
177	2003 Thousand Pines	2" Pine	Protected		Fence
178	2002 Running Springs	33" Willow Oak	Protected	Broken top	Fence
179	1927 Thousand Pines	27" Pine	Protected	Corridor Tree	Trenchless construction, Fence
180	1927 Thousand Pines	15" Sweetgum	Not protected	Private tree	Trenchless construction, Fence
181	1927 Thousand Pines	16" Sweetgum	Not protected	Private tree	Trenchless construction, Fence
182	1927 Thousand Pines	19" Sweetgum	Not protected	Private tree	Trenchless construction, Fence
183	1927 Thousand Pines	21" Pine	Protected	Corridor tree, Not impacted	
184	1927 Thousand Pines	16" Magnolia	Not protected	Private tree	Trenchless construction, Fence
185	1927 Thousand Pines	28" Post Oak	Protected	Corridor Tree	Root prune for manhole, Fence, Clearance prune
186	1927 Thousand Pines	24" Pine	Protected	Corridor Tree	Root prune for manhole, Fence
187	2451 Trailwood Village	22" Crepe Myrtle	Not protected	Private tree	Root prune for manhole, Fence
188	2451 Trailwood Village	22" Live Oak	Protected	Corridor tree, Not impacted	
189	2451 Trailwood Village	15" Live Oak	Protected		Fence

C.N. Koehl
Urban Forestry, Inc.
210 Stone Bush Ct. ◦ Katy, Texas 77493
281-391-0022 ckoehl@koehlurbanforestry.com

APPROVED:

RPS
A TETRA TECH COMPANY
Texas PE Firm Reg. #F-929
575 N. Dairy Ashford, Suite 700,
Houston, Texas 77079
T +1 281 589 7257
E usinfrastructure@rpsgroup.com

SURVEYED BY: KUO Inc.
FB NO. 000000

CITY OF HOUSTON
HOUSTON PUBLIC WORKS

RECONSTRUCTION & REHABILITATION
COH LIFT STATIONS

TREE PROTECTION PLAN

GS-C-21

SHEET 3 OF 4

WBS NUMBER	FOR CITY OF HOUSTON USE ONLY
R-000267-178A-3	
DRAWING SCALE	
AS NOTED	
CITY OF HOUSTON PM	
TAHA LOTIA, P.E.	
SHEET NO. 43 OF 147	

FILE PATH: C:\Users\nedb\OneDrive - Gulf Interstate Engineering Company\desktop\INFO\RPS TRAILWOOD\RPS LIFT STATION 0178 TP-3.dwg PLOT STYLE: CNKoehl.ctb PLOTTED: 8/5/2026 1:58 PM

Arboriculturally Significant Tree List

Tree No.	Location	Description
54	HCCF No. H361522	24" Pine
61	1903 Lake Village	32" Willow Oak
67	1911 Lake Village	24" Pine
70	1911 Lake Village	25" Pine
81	1919 Lake Village	25" Pine
85	1906 Lake Village	24" Pine
88	1906 Lake Village	25" Pine
91	1910 Lake Village	26" Pine
103	2003 Lake Village	28" Live Oak
114	1918 Forest Manor	24" Pine
124	1919 Forest Manor	25" Cherrybark Oak
128	1919 Forest Manor	24" Willow Oak
129	1918 Hickory Creek	27" Cherrybark oak
131	1918 Hickory Creek	25" Sweetgum
146	1922 Lazy Grove	30" Pine
150	2002 Lazy Grove	24" Pine
158	2003 Lazy Grove	24" Post Oak
163	1923 Lazy Grove	24" Pine
166	1923 Lazy Grove	25" Cherrybark Oak
167	1926 Thousand Pines	28" Pine
168	1926 Thousand Pines	24" Pine
173	2003 Thousand Pines	24" Cherrybark Oak
176	2003 Thousand Pines	29" Pine
178	2002 Running Springs	33" Willow Oak
179	1927 Thousand Pines	27" Pine
185	1927 Thousand Pines	28" Post Oak
186	1927 Thousand Pines	24" Pine

Trees Identified by City of Houston Forestry/Parks & Recreation Department as Arboriculturally Significant are identified here and/or in treatment schedule included on TPP sheets. Arboriculturally Significant trees are to be pruned under direct supervision of City of Houston Forestry. Minimal pruning will be allowed for construction equipment access, and in some cases no pruning will be allowed. Contractor must review conditions around and/or under the canopy of Arboriculturally Significant trees and consider restrictions when preparing cost estimate and planning construction equipment that will be necessary to accomplish design installation with minimal to no tree pruning.

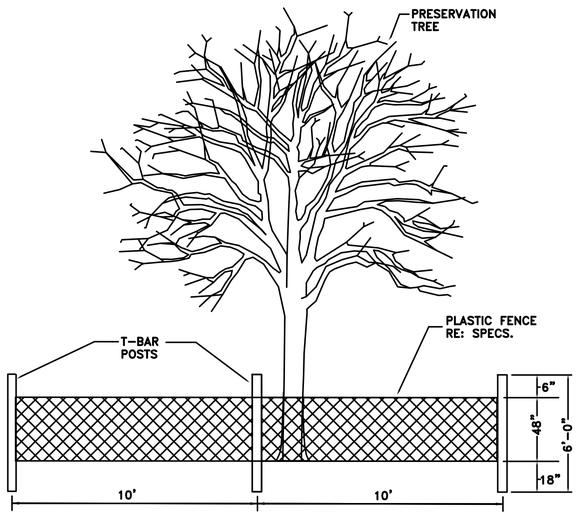

TREE PROTECTION FENCING DETAIL A
NOT TO SCALE

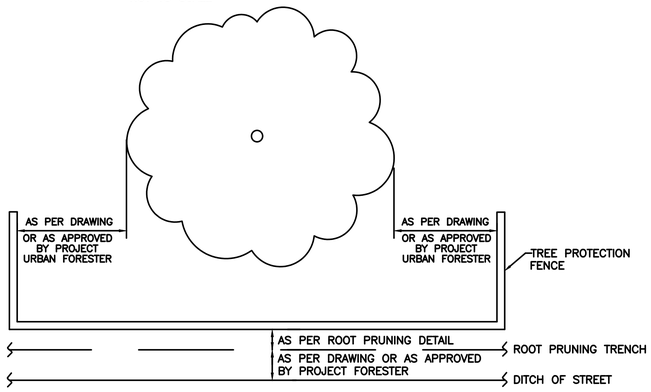

TREE PROTECTION FENCING DETAIL B
NOT TO SCALE

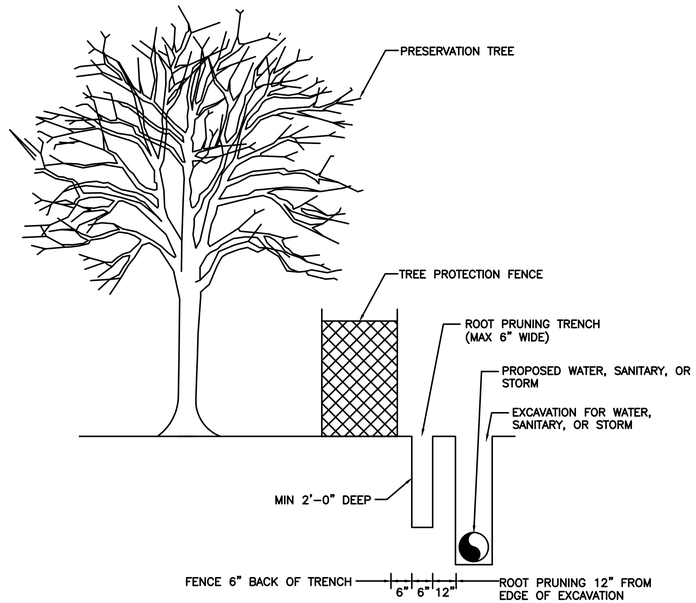

ROOT PRUNE FOR WATER, SANITARY, OR STORM LINE
NOT TO SCALE

NO.	DATE	REVISION	APP.

C.N. Koehl
Urban Forestry, Inc.
210 Stone Bush Ct. ◦ Katy, Texas 77493
281-391-0022 ckoehl@koehlurbanforestry.com

APPROVED:

RPS A TETRA TECH COMPANY
Texas PE Firm Reg. #F-929
575 N. Dairy Ashford, Suite 700,
Houston, Texas 77079
T +1 281 589 7257
E usinfrastructure@rpsgroup.com

SURVEYED BY: KUO Inc.
FB NO. 000000

CITY OF HOUSTON
HOUSTON PUBLIC WORKS

RECONSTRUCTION & REHABILITATION
COH LIFT STATIONS

TREE PROTECTION PLAN

GS-C-22

SHEET 4 OF 4

WBS NUMBER	FOR CITY OF HOUSTON USE ONLY
R-000267-178A-3	
DRAWING SCALE	
AS NOTED	
CITY OF HOUSTON PM	
TAHA LOTIA, P.E.	
SHEET NO. 44 OF 147	

PLOTTED: 8/5/2026 1:58 PM
FILE PATH: C:\Users\nedb\OneDrive - Gulf Interstate Engineering Company\desktop\INFO\RPS TRAILWOOD\RPS LIFT STATION 0178 TP-4.dwg PLOT STYLE: CNKoehl.ctb

MECHANICAL LEGEND

- 20x12 SA — DUCT SIZE & SYSTEM ABBREVIATION; FIRST FIGURE IS DIMENSION SHOWN ON PLAN
- DUCT SECTION, POSITIVE PRESSURE
- DUCT SECTION, NEGATIVE PRESSURE
- NEW DUCTWORK
- FLEXIBLE DUCTWORK
- DUCT TRANSITION
- RECT. TO ROUND TRANSITION
- BRANCH DUCTWORK
- TURNING VANES
- CEILING DIFFUSER - SUPPLY
- CEILING DIFFUSER - RETURN
- CEILING DIFFUSER - EXHAUST
- CEILING DIFFUSER - ROUND
- LINEAR SLOT DIFFUSER (DOUBLE SLOT)
- LOUVER AND SCREEN
- FIRE DAMPER, PROVIDE ACCESS DOOR
- VOLUME DAMPER
- BD — BACKDRAFT DAMPER
- SUPPLY/INTAKE AIRFLOW DIRECTION
- EXHAUST AIRFLOW DIRECTION
- GRILLE OR REGISTER, SIDEWALL
- PIPE CAP
- PIPE CONNECTION, BOTTOM
- PIPE CONNECTION, TOP
- PIPE ELBOW, TURNED UP
- PIPE ELBOW, TURNED DOWN
- PIPE TEE
- ANCHOR, INTERMEDIATE
- BUTTERFLY VALVE
- GATE VALVE
- BALL VALVE
- CHECK VALVE
- STRAINER VALVE
- THREE-WAY CONTROL VALVE
- TWO-WAY CONTROL VALVE
- PRESSURE GAUGE
- ·U· — DOOR UNDERCUT
- Ø — DIAMETER

- MANUAL AIR VENT
- AUTOMATIC AIR VENT
- PUMP (SCHEMATIC)
- (T) — THERMOSTAT
- CO_2 — CARBON DIOXIDE SENSOR
- CO — CARBON MONOXIDE SENSOR
- (M) — MOTORIZED DAMPER
- (A) — PNEUMATIC DAMPER
- (S) — EMERGENCY SHUTDOWN SWITCH
- DP — DIFFERENTIAL PRESSURE SENSOR
- SD — DUCT SMOKE DETECTOR
- (M) — MASTER EMERGENCY SHUTDOWN SWITCH
- (H) — HUMIDISTAT
- HVAC - # — EQUIPMENT TAG
- BOD: 4' - 7" — BOTTOM OF DUCT ELEVATION TAG
- POINT OF DISCONNECTION
- POINT OF CONNECTION
- (#) — KEYED NOTE
- CD-A W X H ### — AIR TERMINAL AND AIRFLOW TAG
  - AIR QUANTITY DELIVERED BY DEVICE IN CFM
  - AIR TERMINAL NECK SIZE (IN.)
  - AIR TERMINAL MARK AS INDICATED IN SCHEDULE
- OR
- SAD-# ### CFM — AIR TERMINAL MARK AS INDICATED IN SCHEDULE; AIR QUANTITY DELIVERED BY DEVICE
- AREA OUT OF SCOPE
- AREA OF DEMOLITION

NOTES:

1. THIS LEGEND IS FOR REFERENCE ONLY.
2. ALL SYMBOLS WITHIN THIS LEGEND MAY NOT APPLY TO THIS PROJECT.

MECHANICAL ABBREVIATIONS

(D)	DEMOLITION
(E)	EXISTING
(R)	RELOCATED
AAV	AUTOMATIC AIR VENT
ABS	ABSOLUTE
AD	ACCESS DOOR
ADJ	ADJUSTABLE
AFF	ABOVE FINISHED FLOOR
AFG	ABOVE FINISHED GRADE
AHU	AIR HANDLING UNIT
AP	ACCESS PANEL
APD	AIR PRESSURE DROP
APPROX	APPROXIMATE
BFF	BELOW FINISHED FLOOR
BHP	BRAKE HORSEPOWER
CAP	CAPACITY
CHWR	CHILLED WATER RETURN
CHWS	CHILLED WATER SUPPLY
CONC	CONCRETE
COND	CONDENSATE
CONN	CONNECTION
CONT	CONTINUATION
CP-1	CONTROL PANEL WITH DESIGNATION
CU	CONDENSING UNIT
CW	CHILLED WATER
DB	DRY BULB
DEG	DEGREES
DEMO	DEMOLITION
DIA	DIAMETER
DN	DOWN
DWG	DRAWING
EA	EXHAUST AIR
EAG	EXHAUST AIR GRILLE
EAT	ENTERING AIR TEMPERATURE
EF	EXHAUST FAN
EMCS	EMERGENCY MANAGEMENT AND CONTROL SYSTEM
ENT	ENTERING
ERV	ENERGY RECOVERY VENTILATOR
ESP	EXTERNAL STATIC PRESSURE
ET	EXPANSION TANK
EUH	ELECTRIC UNIT HEATER
EWT	ENETERING WATER TEMPERATURE
EXH	EXHAUST
F	FAHRENHEIT
FCU	FAN COIL UNIT
FD	FIRE DAMPER
FH	FIRE HYDRANT
FLEX	FLEXIBLE
FM	FLOW METER
FPM	FEET PER MINUTE
GAL	GALLONS
GH	GRAVITY HOOD
GM	GAS METER
GPM	GALLONS PER MINUTE
GUH	GAS UNIT HEATER
HP	HORSEPOWER
HWR	HOT WATER RETURN
HWS	HOT WATER SUPPLY
ID	INSIDE DIAMETER/DIMENSION
IE	INVERT ELEVATION
IN	INCH
L	LOUVER
LAT	LEAVING AIR TEMPERATURE
LP	LOUVERED PENTHOUSE
LVL	LEVEL
LWT	LEAVING WATER TEMPERATURE
M	METER
MAX	MAXIMUM
MEZZ	MEZZANINE
MFR	MANUFACTURER
MIN	MINIMUM
MISC	MISCELLANEOUS
N/A	NOT APPLICABLE
NG	NATURAL GAS
NTS	NOT TO SCALE
OA	OUTDOOR AIR
OD	OUTSIDE DIAMETER
OED	OPEN ENDED DUCT
PD	PRESSURE DROP
PSI	POUNDS PER SQUARE INCH
R	RADIUS
RA	RETURN AIR
RAG	RETURN AIR GRILLE
REFRIG	REFRIGERANT
RH	RADIANT HEATER
RL	REFRIGERANT LIQUID LINE
RPM	REVOLUTIONS PER MINUTE
RS	REFRIGERANT SUCTION LINE
SA	SUPPLY AIR
SAG	SUPPLY AIR GRILLE
SB	SECURITY BARS
SF	SUPPLY FAN
SPEC	SPECIFICATION
STD	STANDARD
T	THERMOMETER
TA	TRANSFER AIR
TBD	TO BE DETERMINED
TEMP	TEMPERATURE
TSP	TOTAL STATIC PRESSURE
TSTAT	THERMOSTAT
TYP	TYPICAL
UH	UNIT HEATER
V	VENT
VAV	VARIABLE AIR VOLUME
VFD	VARIABLE FREQUENCY DRIVE
VIF	VERIFY IN FIELD
VRF	VARIABLE REFRIGERANT FLOW
W	WATT
WB	WET BULB
WMS	WIRE MESH SCREEN
WS	WASTE STACK

APPLICABLE CODES AND STANDARDS

HOUSTON BUILDING CODE	HBC 2021 (IBC 2021)
HOUSTON BUILDING CODE, EXISTING BLDG	HEBC 2021 (IEBC 2021)
HOUSTON PLUMBING CODE	HPC 2021 (UPC 2021)
TEXAS IHB FUEL GAS CODE	TFGC 2021 (IFGC 2021)
HOUSTON ELECTRICAL CODE	HEC 2023 (NFPA 70 2023)
OCCUPATIONAL SAFETY AND HEALTH ACT	OSHA
COH DPW&E ENGINEERING DESIGN MANUAL FOR SUBMERSIBLE LIFT STATIONS	COH DPW&E 2016

NOTE: ALL APPLICABLE BUILDING CODES AND STANDARDS NOT SPECIFIED HEREIN.

MECHANICAL GENERAL NOTES

GENERAL NOTES

1. THESE GENERAL NOTES APPLY TO ALL SHEETS. REFER TO INDIVIDUAL SHEETS FOR SHEET SPECIFIC NOTES.
2. CONTRACT DOCUMENT DRAWINGS ARE DIAGRAMMATIC AND ARE INTENDED TO CONVEY SCOPE AND GENERAL ARRANGEMENT ONLY. DO NOT SCALE FOR MATERIAL QUANTITIES. ALL SCALING SHOULD BE REFERENCED TO ARCHITECTURAL PLANS ONLY.
3. COORDINATE CONSTRUCTION OF ALL MECHANICAL WORK WITH ALL OTHER DISCIPLINES AND AS SHOWN ON OTHER CONTRACT DRAWINGS.
4. CONTRACTOR SHALL VISIT SITE AND VERIFY ALL EXISTING CONDITIONS AND CONNECTIONS TO EXISTING WORK PRIOR TO BIDDING AND CONSTRUCTION.
5. COORDINATE CUTTING AND PATCHING WITH GENERAL CONTRACTOR AND OTHER DISCIPLINES. CONTRACTOR SHALL BE RESPONSIBLE FOR ALL CUTTING AND PATCHING RELATED TO THEIR WORK.
6. ALL ATTACHMENTS TO THE BUILDING STRUCTURE SHALL BE COORDINATED WITH THE STRUCTURAL DESIGN. ALL BRACING AND MOUNTING OF PIPES AND DUCTS SHALL MEET THE MINIMUM REQUIREMENTS OF THE MOST RECENT SMACNA HVAC DUCT CONSTRUCTION STANDARDS-METAL AND FLEXIBLE. CONTRACTOR SHALL MAINTAIN ONE COPY OF THIS MANUAL ON SITE AT ALL TIMES.
7. FOR SEISMIC ZONES REFER TO STRUCTURAL DESIGN FOR SEISMIC ATTACHMENT REQUIREMENTS PER THE BUILDING CODE. ALL SEISMIC RESTRAINTS OF PIPES AND DUCTS SHALL MEET THE MINIMUM REQUIREMENTS OF THE MOST RECENT SMACNA SEISMIC RESTRAINT MANUAL. CONTRACTOR SHALL MAINTAIN ONE COPY ON SITE AT ALL TIMES.
8. PROVIDE FLASHING AND COUNTERFLASHING FOR ALL PENETRATIONS THROUGH WALLS OR ROOF TO MAKE WATERPROOF INSTALLATION.
9. ALL MISCELLANEOUS STEEL REQUIRED TO ENSURE PROPER INSTALLATION AND AS SHOWN IN THE DETAILS FOR PIPING, DUCTWORK, AND EQUIPMENT (UNLESS OTHERWISE NOTED) SHALL BE FURNISHED AND INSTALLED BY THE MECHANICAL CONTRACTOR.
10. AT COMPLETION OF CONSTRUCTION, CONTRACTOR SHALL PROVIDE DIGITAL OR PRINTED COPIES OF BOUND OPERATIONS AND MAINTENANCE MANUALS.

ANCHORAGE NOTES

1. ALL MECHANICAL EQUIPMENT SHALL BE ANCHORED OR BRACED TO MEET THE HORIZONTAL AND VERTICAL FORCES PRESCRIBED IN CHAPTER 13 OF ASCE 7-16, IBC 2108 SECTION 1613, AND AS MODIFIED BY CHAPTER 2 OF UFC 3-301-01.
2. THE ATTACHMENT OF THE FOLLOWING ITEMS SHALL RESIST THE ASSIGNED FORCES BUT NEED NOT BE DETAILED ON THE PLANS. THE INSPECTOR SHALL VERIFY THAT THESE EQUIPMENT AND DISTRIBUTION SYSTEMS HAVE BEEN ANCHORED.
   - TEMPORARY OR MOVABLE EQUIPMENT WITH FLEXIBLE CONNECTION TO POWER OR UTILITIES.
   - EQUIPMENT WEIGHING 20 LB OR LESS OR IN CASE OF DISTRIBUTED SYSTEM 5 LB/FT OR LESS.
3. INSTALLATION OF THE COMPONENTS NOT SPECIFICALLY DETAILED ON THE PLANS SHALL BE SUBJECT TO THE APPROVAL OF THE OWNER'S REPRESENTATIVE AND/OR STRUCTURAL ENGINEER.
4. PROVIDE CALCULATIONS AND DETAILS FOR THE SUPPORTS, ATTACHMENTS, AND BRACING OF ALL PIPES, DUCTS, AND CONDUITS.
5. A LICENSED PROFESSIONAL ENGINEER SHALL VERIFY THE ADEQUACY OF STRUCTURE FOR SUPPORT AND ANCHORAGE OF THE EQUIPMENT.

NO	DATE	REVISION	APP.

RPS — A TETRA TECH COMPANY
Texas PE Firm Reg. #F-929
575 N. Dairy Ashford, Suite 700, Houston, Texas 77079
T +1 281 589 7257
E usinfrastructure@rpsgroup.com

SURVEYED BY: KUO INC.
FB NO. F-4578

This document is released for the purposes of interim review only under the authority of:

Jeffrey Johnston, P.E.
Texas P.E. No. 160726
2/16/26

It is not to be used for bidding, construction, or permitting purposes.

CITY OF HOUSTON
HOUSTON PUBLIC WORKS

RECONSTRUCTION & REHABILITATION
COH LIFT STATIONS

ABBREVIATIONS, LEGENDS, & NOTES

M-1

WBS NUMBER	FOR CITY OF HOUSTON USE ONLY
R-000267-178A-3	
DRAWING SCALE	
AS NOTED	
CITY OF HOUSTON PM	
TAHA LOTIA	
SHEET NO. 45 OF 147	

PLOTTED: 9/2/2026 3:18:59 PM
PLOT STYLE:
Autodesk Docs://200-317106-24001 COH LS Rehab Design/M-LIFT STATIONS-200-317106-24001_v25.rvt

PLOTTED: 9/2/2026 3:19:16 PM
PLOT STYLE:
Autodesk Docs://200-317106-24001 COH LS Rehab Design/M-LIFT STATIONS-200-317106-24001_v25.rvt

KEYNOTE

1 PROVIDE PASSIVE GOOSENECK VENT FOR LIFT STATION WET WELL. COORDINATE WITH STRUCTURAL FOR PIPE PENETRATION THROUGH SIDEWALL OF WET WELL PER MECHANICAL DETAILS. ENSURE VENT LOCATION DOES NOT CLASH WITH ACCESS HATCH OPENING. VENT PIPE IS TO BE OF CORROSIVE RESISTANT CONSTRUCTION. PROVIDE REPLACEABLE STAINLESS STEEL INSECT SCREEN OVER VENT INLET/OUTLET.

NO.	DATE	REVISION	APP.

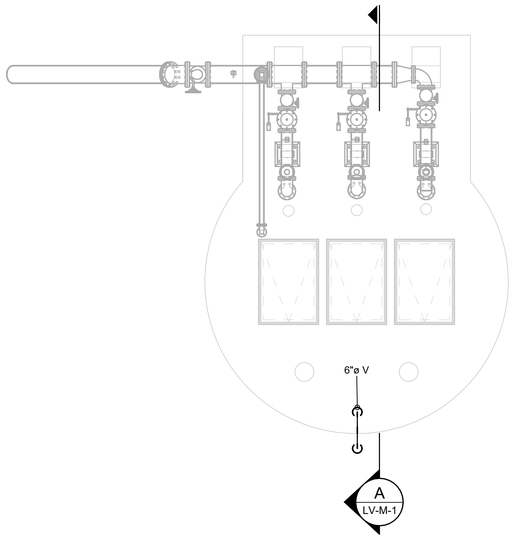

LAKE VILLAGE LIFT STATION MECHANICAL PLAN
SCALE: 1/4" = 1'-0"

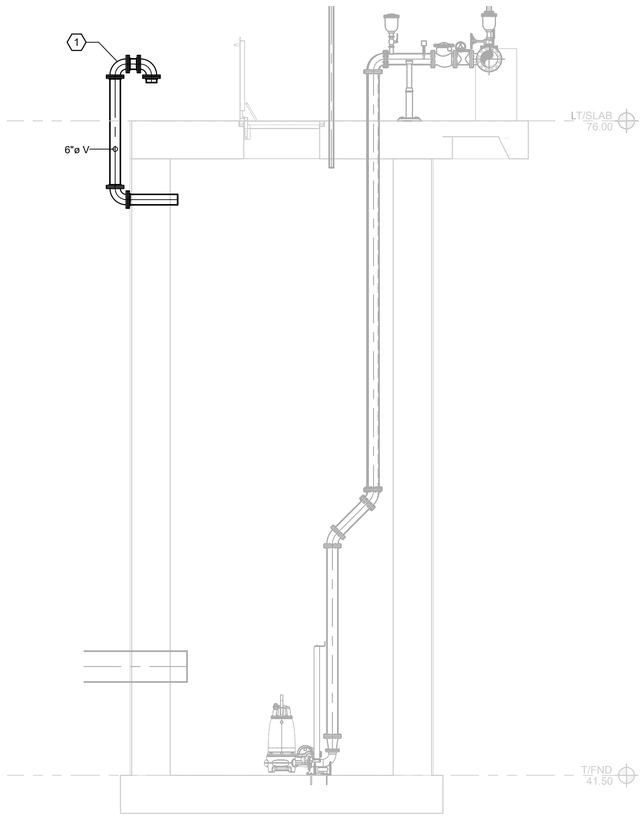

A LV-M-1 LAKE VILLAGE LIFT STATION MECHANICAL SECTION
SCALE: 1/4" = 1'-0"

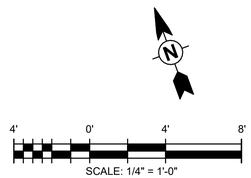

SCALE: 1/4" = 1'-0"

RPS A TETRA TECH COMPANY
Texas PE Firm Reg. #F-929
575 N. Dairy Ashford, Suite 700,
Houston, Texas 77079
T +1 281 589 7257
E usinfrastructure@rpsgroup.com

SURVEYED BY: KUO INC.
FB NO. F-4578

This document is released for the purposes of interim review only under the authority of:

Jeffrey Johnston, P.E.
Texas P.E. No. 160726
2/16/26

It is not to be used for bidding, construction, or permitting purposes.

CITY OF HOUSTON
HOUSTON PUBLIC WORKS

RECONSTRUCTION & REHABILITATION
COH LIFT STATIONS

LAKE VILLAGE LS MECHANICAL PLAN AND SECTION

LV-M-1

WBS NUMBER
R-000267-178A-3
DRAWING SCALE
AS NOTED
CITY OF HOUSTON PM
TAHA LOTIA
SHEET NO. 46 OF 147

FOR CITY OF HOUSTON USE ONLY

1 TYPICAL WET WELL GOOSENECK VENT DETAIL

SCALE: N.T.S.

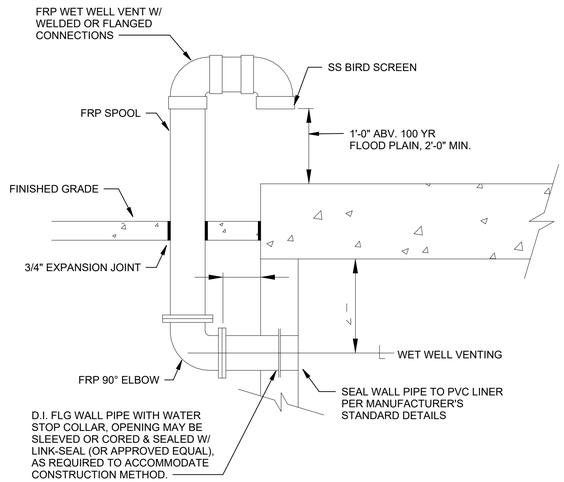

2 WET WELL LOW PROFILE VENT DETAIL

SCALE: N.T.S.

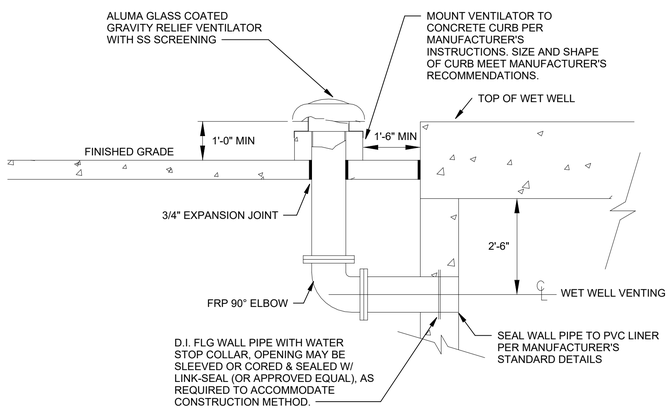

NOTE: PROVIDED UPON REQUEST, DETAIL 1 IS STANDARD.

NO	DATE	REVISION	APP.

A TETRA TECH COMPANY
Texas PE Firm Reg. #F-929
575 N. Dairy Ashford, Suite 700,
Houston, Texas 77079
T +1 281 589 7257
E usinfrastructure@rpsgroup.com

SURVEYED BY: KUO INC.
FB NO. F-4578

This document is released for the purposes of interim review only under the authority of:

Jeffrey Johnston, P.E.
Texas P.E. No. 160726
2/16/26

It is not to be used for bidding, construction, or permitting purposes.

CITY OF HOUSTON

HOUSTON PUBLIC WORKS

RECONSTRUCTION & REHABILITATION
COH LIFT STATIONS

STANDARD MECHANICAL DETAILS

STD-M-1

WBS NUMBER
R-000267-178A-3
DRAWING SCALE
AS NOTED
CITY OF HOUSTON PM
TAHA LOTIA
SHEET NO. 47 OF 147

FOR CITY OF HOUSTON USE ONLY

PLOTTED: 9/2/2026 3:19:17 PM
PLOT STYLE:
Autodesk Docs://200-317106-24001 COH LS Rehab Design/M-LIFT STATIONS-200-317106-24001_v25.rvt

PLUMBING LEGEND

SANITARY SEWER PIPING
COLD WATER PIPING
HOT WATER PIPING
HOT WATER RECIRCULATION PIPING
VENT PIPING
STORM PIPING
HIDDEN / UNDERGROUND PIPING

VENT THROUGH ROOF
CLEAN OUT, EXPOSED
CLEAN OUT
DOUBLE YARD CLEANOUT
FLOOR DRAIN
TPL — TRAP PRIMER LINE
HB — HOSE BIBB W/INTEGRAL VACUUM BREAKER (INTERIOR SURFACE)
WH — WALL HYDRANT W/INTEGRAL VACUUM BREAKER (EXTERIOR SURFACE)
PIPE CAP
PIPE CONNECTION, BOTTOM
PIPE CONNECTION, TOP
PIPE ELBOW, TURNED UP
PIPE ELBOW, TURNED DOWN
PIPE TEE
ANCHOR, INTERMEDIATE
BUTTERFLY VALVE
GATE VALVE
BALL VALVE
CHECK VALVE
STRAINER VALVE
STRAINER (BLOW-OFF)
GAS COCK/GAS STOP
THERMOMETER
BALANCING VALVE
THERMOSTATIC MIXING VALVE
SOLENOID VALVE
PRESSURE REGULATOR
RELIEF VALVE
WATER HAMMER ARRESTER/SHOCK ABSORBER
UNION
PUMP (SCHEMATIC)
W — WATER METER
BFP — BACK FLOW PREVENTER
M — GAS METER
Ø — DIAMETER

SK - # — FIXTURE TAG
LIMIT OF DEMOLITION
CONNECT TO EXISTING
KEYED NOTE
3/4"ø HW — PIPE SIZE AND SYSTEM TAG
AREA OUT OF SCOPE
AREA OF DEMOLITION

NOTES:

1. THIS LEGEND IS FOR REFERENCE ONLY.
2. ALL SYMBOLS WITHIN THIS LEGEND MAY NOT APPLY TO THIS PROJECT.

PLUMBING ABBREVIATIONS

(D)	DEMOLITION
(E)	EXISTING
(R)	RELOCATED
AFF	ABOVE FINISHED FLOOR
AFG	ABOVE FINISHED GRADE
APPROX	APPROXIMATE
BFF	BELOW FINISHED FLOOR
BFP	BACKFLOW PREVENTER
CA	COMPRESSED AIR
CAP	CAPACITY
CO	CLEAN OUT
COND	CONDENSATE
CONN	CONNECTION
CONT	CONTINUATION
D	DRAIN
DCW	DOMESTIC COLD WATER
DEG	DEGREES
DEMO	DEMOLITION
DIA	DIAMETER
DN	DOWN
DS	DOWNSPOUT
DWG	DRAWING
EA	EACH
EEW	EMERGENCY EYE/FACE WASH
ENT	ENTERING
ESS	EMERGENCY SAFETY SHOWER
ET	EXPANSION TANK
F	FAHRENHEIT
FCO	FLOOR CLEAN OUT
FD	FLOOR DRAIN
FH	FIRE HYDRANT
FM	FLOW METER
FPH	FREEZE PROOF HYDRANT
FPM	FEET PER MINUTE
GAL	GALLONS
GD	GARBAGE DISPOSAL
GM	GAS METER
GPM	GALLONS PER MINUTE
GWH	GAS WATER HEATER
HB	HOSE BIBB
HD	HEAD
HO	HUB OUTLET
HP	HORSEPOWER
HW	HOT WATER
HWR	HOT WATER RETURN
ID	INSIDE DIAMETER/DIMENSION
IE	INVERT ELEVATION
IMVB	ICE MAKER VALVE BOX
IN	INCH
IW	INDUSTRIAL WASTE
IWH	INSTANTANEOUS WATER HEATER
LAV	LAVATORY
M	METER
MAX	MAXIMUM
MEZZ	MEZZANINE
MFR	MANUFACTURER
MIN	MINIMUM
MISC	MISCELLANEOUS
N/A	NOT APPLICABLE
NG	NATURAL GAS
NPW	NON-POTABLE WATER
NTS	NOT TO SCALE
OD	OUTSIDE DIAMETER
PCV	PRESSURE CONTROL VALVE
PD	PRESSURE DROP
PG	PRESSURE GAUGE
PRV	PRESSURE REDUCING VALVE
PSI	POUNDS PER SQUARE INCH
PVC	POLYVINYL CHLORIDE
PW	POTABLE WATER
R	RADIUS
RD	ROOF DRAIN
RP	RECIRCULATION PUMP
RPBP	REDUCED PRESSURE BACKFLOW PREVENTER
RPM	REVOLUTIONS PER MINUTE
SAN	SANITARY SEWER PIPING
SK	SINK
SP	SUMP PUMP
SPEC	SPECIFICATION
STD	STANDARD
STO	STORM
SW	SERVICE WATER
TBD	TO BE DETERMINED
TCV	TEMPERING VALVE
TD	TRENCH DRAIN
TEMP	TEMPERATURE
TMV	THERMOSTATIC MIXING VALVE
TP	TRAP PRIMER
TW	TEPID WATER
TYP	TYPICAL
UR	URINAL
V	VENT
VIF	VERIFY IN FIELD
VS	VENT STACK
VTR	VENT THRU ROOF
WB	WASHER BOX
WC	WATER CLOSET
WCO	WALL CLEAN OUT
WG	WATER GAUGE
WPD	WATER PRESSURE DROP
YH	YARD HYDRANT

PLUMBING GENERAL NOTES

APPLICABLE CODES AND STANDARDS	
HOUSTON BUILDING CODE	HBC 2021 (IBC 2021)
HOUSTON BUILDING CODE, EXISTING BLDG	HEBC 2021 (IEBC 2021)
HOUSTON PLUMBING CODE	HPC 2021 (UPC 2021)
TEXAS IHB FUEL GAS CODE	TFGC 2021 (IFGC 2021)
HOUSTON ELECTRICAL CODE	HEC 2023 (NFPA 70 2023)
OCCUPATIONAL SAFETY AND HEALTH ACT	OSHA
COH DPW&E ENGINEERING DESIGN MANUAL FOR SUBMERSIBLE LIFT STATIONS	COH DPW&E 2016

NOTE: ALL APPLICABLE BUILDING CODES AND STANDARDS NOT SPECIFIED HEREIN.

GENERAL NOTES

1. THESE GENERAL NOTES APPLY TO ALL SHEETS. REFER TO INDIVIDUAL SHEETS FOR SHEET NOTES.
2. CONTRACT DOCUMENT DRAWINGS ARE DIAGRAMMATIC AND ARE INTENDED TO CONVEY SCOPE AND GENERAL ARRANGEMENT ONLY. DO NOT SCALE FOR MATERIAL QUANTITIES. ALL SCALING SHOULD BE REFERENCED TO ARCHITECTURAL PLANS ONLY.
3. ALL EQUIPMENT AND PIPING SHALL BE INSTALLED IN COMPLIANCE WITH THE CODES LISTED IN THE TABLE ABOVE.
4. ALL INTERIOR FLOOR DRAINS AND OPEN RECEPTACLES WITH TRAPS SHALL BE PROTECTED BY A TRAP PRIMER.
5. WATER LINES SHALL NOT BE ROUTED ABOVE ANY ELECTRICAL ROOMS, ELECTRICAL PANELS, OR TELEPHONE ROOMS.
6. CONTRACTOR IS RESPONSIBLE FOR COORDINATION WITH OTHER TRADES TO MINIMIZE SPATIAL CONFLICTS.
7. CONTRACTOR SHALL VERIFY ALL FIELD CONDITIONS AND DIMENSIONS BEFORE CONSTRUCTION BEGINS.
8. PROVIDE ISOLATION VALVES AT ALL PIPE CONNECTIONS TO EQUIPMENT.
9. COORDINATE NEW WATER METER LOCATION WITH LOCAL UTILITY AUTHORITY.
10. PROPOSED SCOPE OF WORK IS TO BE PERFORMED BY A LICENSED CONTRACTOR IN THE STATE OF TEXAS, CONTRACTOR TO PROVIDE PROOF OF LICENSURE AS SUBMITTAL.

NATURAL GAS PIPING NOTES

1. ALL GAS PIPING SHALL BE PAINTED AND LABELED IN ACCORDANCE WITH APPLICABLE CODES AND SPECIFICATIONS.
2. COORDINATE NEW METER LOCATION FOR BUILDING WITH LOCAL UTILITIES.
3. ALL GAS PIPING SHALL BE LABELED AT BEGINNING, ALL ENDS, AND AT 6' INTERVALS DESIGNATING GAS & PRESSURE. LABELS SHALL BE PER SPECIFICATIONS.

NO	DATE	REVISION	APP.

A TETRA TECH COMPANY
Texas PE Firm Reg. #F-929
575 N. Dairy Ashford, Suite 700,
Houston, Texas 77079
T +1 281 589 7257
E usinfrastructure@rpsgroup.com

SURVEYED BY: KUO INC.
FB NO. F-4578

This document is released for the purposes of interim review only under the authority of:

Jeffrey Johnston, P.E.
Texas P.E. No. 160726
2/16/26

It is not to be used for bidding, construction, or permitting purposes.

CITY OF HOUSTON

HOUSTON PUBLIC WORKS

RECONSTRUCTION & REHABILITATION
COH LIFT STATIONS

ABBREVIATIONS, LEGENDS, & NOTES

P-1

WBS NUMBER	FOR CITY OF HOUSTON USE ONLY
R-000267-178A-3	
DRAWING SCALE	
AS NOTED	
CITY OF HOUSTON PM	
TAHA LOTIA	
SHEET NO. 48 OF 147	

PLOTTED: 9/2/2026 3:19:17 PM
PLOT STYLE:
Autodesk Docs://200-317106-24001 COH LS Rehab Design/M-LIFT STATIONS-200-317106-24001_v25.rvt

PLOTTED: 9/2/2026 3:19:18 PM
PLOT STYLE:
Autodesk Docs://200-317106-24001 COH LS Rehab Design/M-LIFT STATIONS-200-317106-24001_v25.rvt

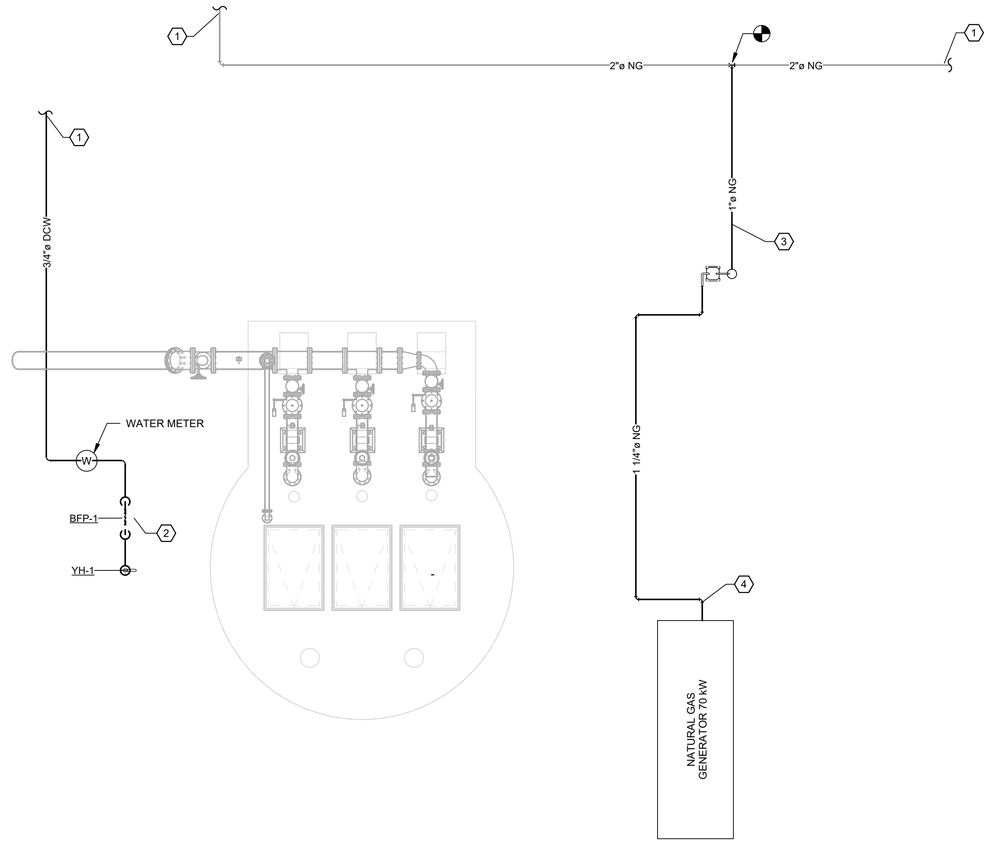

KEYNOTE

#	
1	REFER TO CIVIL PLANS FOR YARD PIPING CONTINUATION.
2	PROVIDE DOMESTIC COLD WATER SERVICE PIPING TO LIFT STATION SITE. COORDINATE WITH CIVIL FOR SERVICE CONNECTION TO WATER MAIN. TRANSITION PIPING TO ABOVE GRADE REDUCED PRESSURE ZONE BACKFLOW PREVENTER. COORDINATE WITH LOCAL UTILITY TO PROVIDE NEW WATER METER. PROVIDE PAINTED METAL CAGE ENCLOSURE FOR BACKFLOW PREVENTER PER MECHANICAL DETAILS.
3	PROVIDE NATURAL GAS SERVICE PIPING TO LIFT STATION SITE. COORDINATE WITH LOCAL UTILITY FOR NATURAL GAS SERVICE CONNECTION TO MAIN. CONTRACTOR TO COORDINATE WITH LOCAL UTILITY TO PROVIDE NEW NATURAL GAS METER AND PRESSURE REDUCING VALVE FOR SERVICE.
4	REFER TO ELECTRICAL DRAWINGS AND GENERATOR MANUFACTURER SPECIFICATIONS FOR FINAL NATURAL GAS PIPING CONNECTION LOCATION. PROVIDE SHUT OFF VALVE FOR ISOLATION AND FLEXIBLE CONNECTION AT GENERATOR.

NO	DATE	REVISION	APP.

LAKE VILLAGE LIFT STATION PLUMBING PLAN

SCALE: 1/4" = 1'-0"

PLUMBING FIXTURE SCHEDULE

MARK	DESCRIPTION	CONNECTION SIZE (IN)				MANUFACTURER	MODEL	NOTES
		CW	HW	WASTE	VENT			
YH-1	FREEZE-PROOF YARD HYDRANT	3/4"	-	-	-	ZURN	Z1396XL	1

NOTES:
1. PROVIDE WITH CONCRETE PROTECTIVE BASE, GUARD CASING, VACUUM BREAKER.

LAKE VILLAGE BACKFLOW PREVENTER SCHEDULE

MARK	DESCRIPTION	LOCATION	SIZE (IN)	FLOW (GPM)	MAXIMUM OPERATING PRESSURE (PSIG)	MAXIMUM INLET TEMPERATURE (°F)	PRESSURE LOSS AT RATED FLOW (PSIG)	MANUFACTURER	MODEL	NOTES
BFP-1	REDUCED PRESSURE ZONE BACKFLOW PREVENTER	LAKE VILLAGE	3/4"	10	175	180	13.0	WATTS	LF009-QT-S	1

NOTES:
1. PROVIDE WITH BALL VALVES FOR SHUT OFF, STRAINER, INSULATED VANDAL-PROOF ENCLOSURE (HOT BOX TYPE OR APPROVED EQUAL)

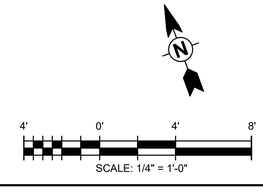

rps A TETRA TECH COMPANY
Texas PE Firm Reg. #F-929
575 N. Dairy Ashford, Suite 700,
Houston, Texas 77079
T +1 281 589 7257
E usinfrastructure@rpsgroup.com

SURVEYED BY: KUO INC.
FB NO. F-4578

This document is released for the purposes of interim review only under the authority of:

Jeffrey Johnston, P.E.
Texas P.E. No. 160726
2/16/26

It is not to be used for bidding, construction, or permitting purposes.

CITY OF HOUSTON

HOUSTON PUBLIC WORKS

RECONSTRUCTION & REHABILITATION
COH LIFT STATIONS

LAKE VILLAGE LS PLUMBING PLAN AND SCHEDULES

LV-P-1

WBS NUMBER	FOR CITY OF HOUSTON USE ONLY
R-000267-178A-3	
DRAWING SCALE	
AS NOTED	
CITY OF HOUSTON PM	
TAHA LOTIA	
SHEET NO. 49 OF 147	

1 OPEN CAGE REDUCED PRESSURE BACKFLOW PREVENTER DETAIL

SCALE: 12" = 1'-0"

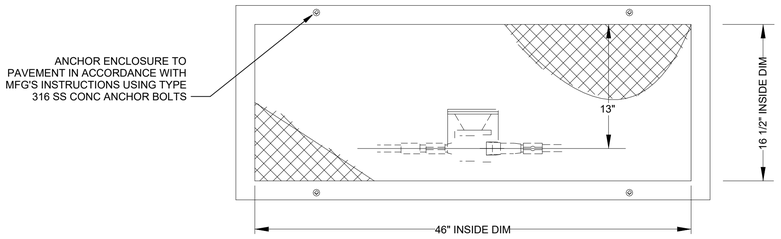

PLAN VIEW

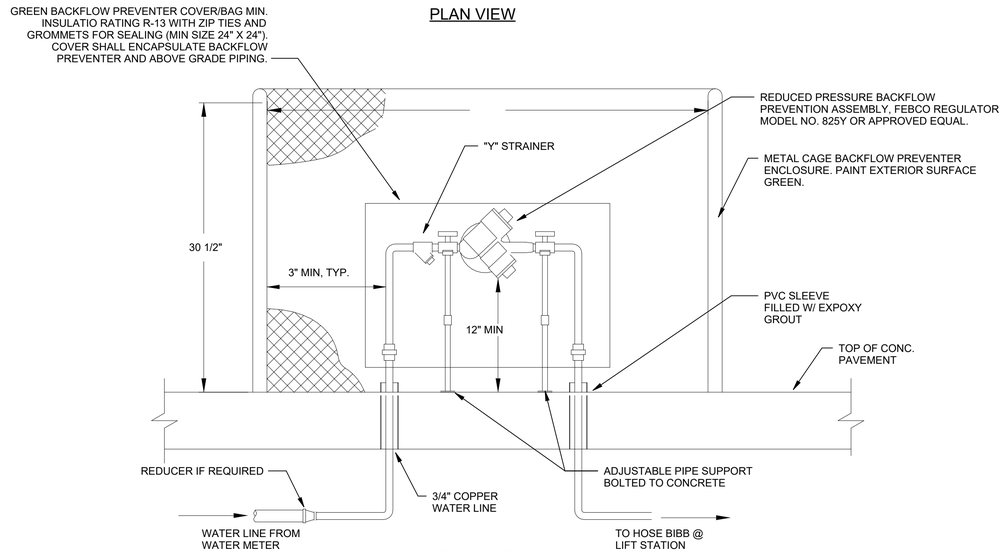

FRONT VIEW

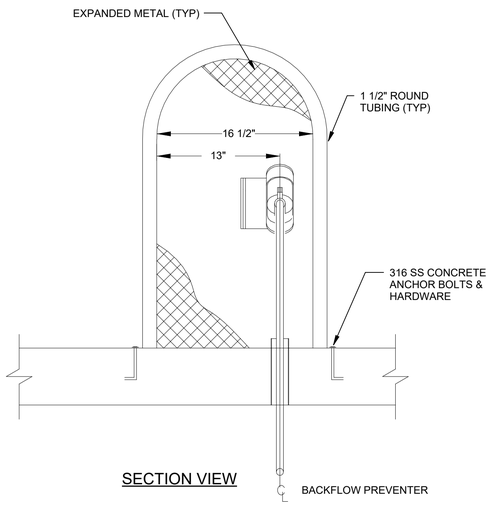

SECTION VIEW

2 TYPICAL NON-FREEZE YARD HYDRANT DETAIL

SCALE: N.T.S.

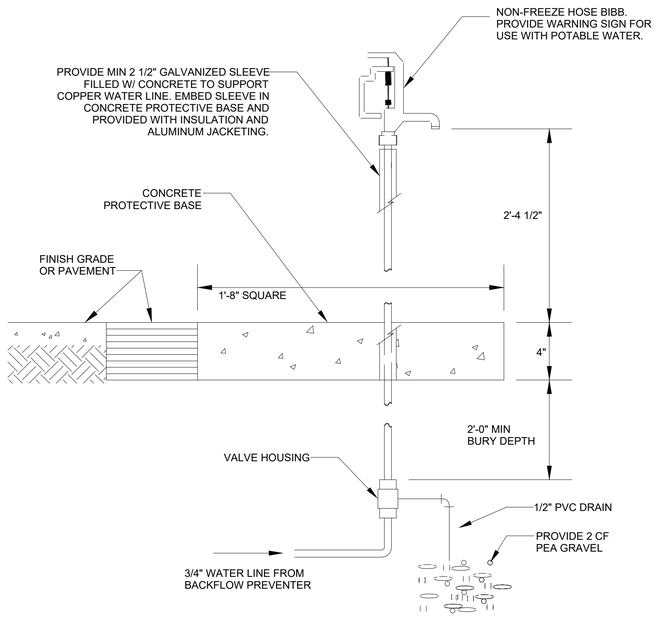

NO.	DATE	REVISION	APP.

A TETRA TECH COMPANY
Texas PE Firm Reg. #F-929
575 N. Dairy Ashford, Suite 700,
Houston, Texas 77079
T +1 281 589 7257
E usinfrastructure@rpsgroup.com

SURVEYED BY: KUO INC.
FB NO. F-4578

This document is released for the purposes of interim review only under the authority of:

Jeffrey Johnston, P.E.
Texas P.E. No. 160726
2/16/26

It is not to be used for bidding, construction, or permitting purposes.

CITY OF HOUSTON

HOUSTON PUBLIC WORKS

RECONSTRUCTION & REHABILITATION
COH LIFT STATIONS

STANDARD PLUMBING DETAILS

STD-P-1

WBS NUMBER	FOR CITY OF HOUSTON USE ONLY
R-000267-178A-3	
DRAWING SCALE	
AS NOTED	
CITY OF HOUSTON PM	
TAHA LOTIA	
SHEET NO. 50 OF 147	

PLOTTED: 9/2/2026 3:19:19 PM
PLOT STYLE:
Autodesk Docs://200-317106-24001 COH LS Rehab Design/M-LIFT STATIONS-200-317106-24001_v25.rvt

1 TYPICAL WATER SERVICE LINE AND METER DETAIL

SCALE: N.T.S.

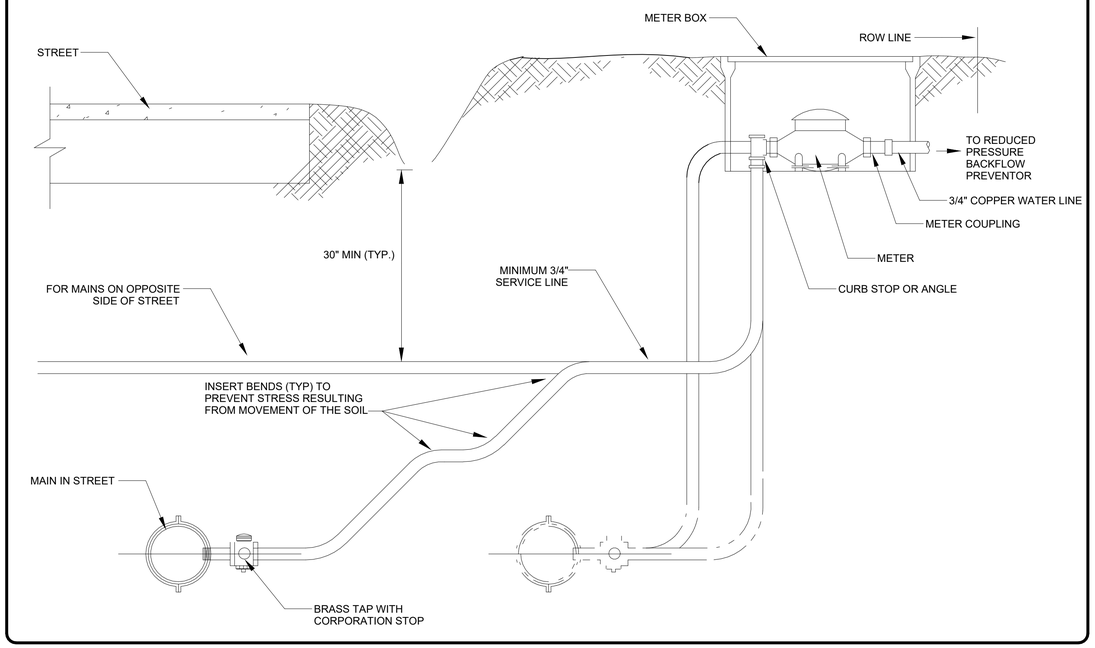

2 GAS SERVICE ENTRANCE DETAIL

SCALE: N.T.S.

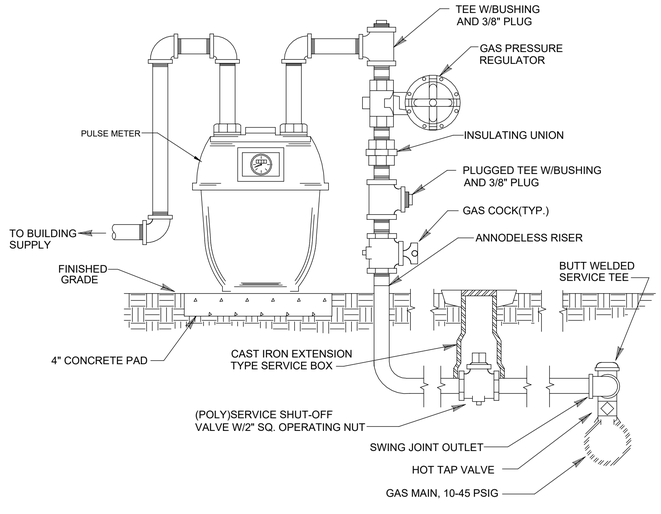

NOTE: LINE SIZES AS CALLED FOR ON SITE PLAN

3 GAS CONNECTION TO EQUIPMENT

SCALE: N.T.S.

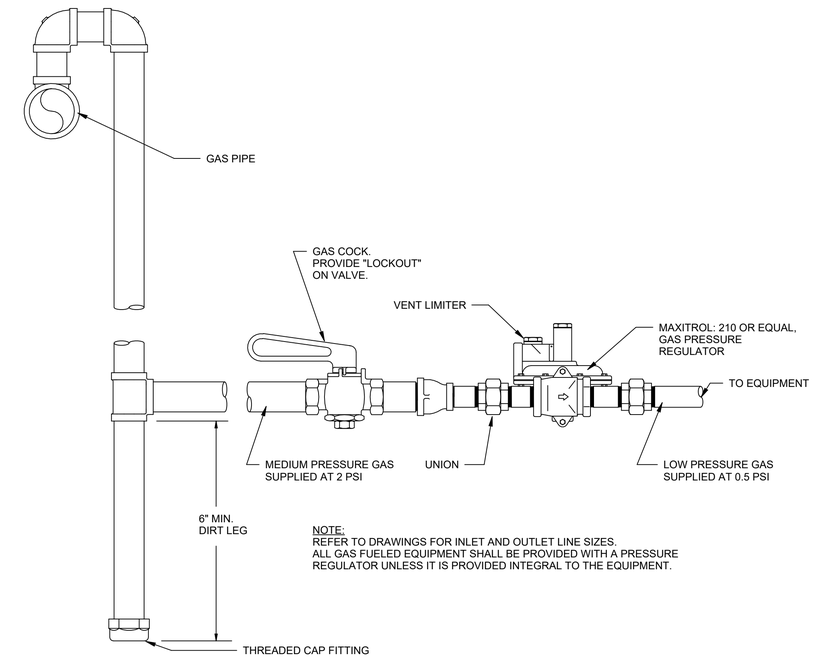

NOTE:
REFER TO DRAWINGS FOR INLET AND OUTLET LINE SIZES.
ALL GAS FUELED EQUIPMENT SHALL BE PROVIDED WITH A PRESSURE REGULATOR UNLESS IT IS PROVIDED INTEGRAL TO THE EQUIPMENT.

NO	DATE	REVISION	APP.

A TETRA TECH COMPANY
Texas PE Firm Reg. #F-929
575 N. Dairy Ashford, Suite 700,
Houston, Texas 77079
T +1 281 589 7257
E usinfrastructure@rpsgroup.com

SURVEYED BY: KUO INC.
FB NO. F-4578

This document is released for the purposes of interim review only under the authority of:

Jeffrey Johnston, P.E.
Texas P.E. No. 160726
2/16/26

It is not to be used for bidding, construction, or permitting purposes.

CITY OF HOUSTON

HOUSTON PUBLIC WORKS

RECONSTRUCTION & REHABILITATION
COH LIFT STATIONS

STANDARD PLUMBING DETAILS

STD-P-2

WBS NUMBER
R-000267-178A-3
DRAWING SCALE
AS NOTED
CITY OF HOUSTON PM
TAHA LOTIA
SHEET NO. 51 OF 147

FOR CITY OF HOUSTON USE ONLY

PLOTTED: 9/2/2026 3:19:19 PM
PLOT STYLE:
Autodesk Docs://200-317106-24001 COH LS Rehab Design/M-LIFT STATIONS-200-317106-24001_v25.rvt

PLOTTED 9/2/2026 2:20:43 PM
PLOT STYLE:
Autodesk Docs://200-317106-24001 COH LS Rehab Design/S-LIFT STATIONS-200-317106-24001_v25.rvt

STRUCTURAL GENERAL NOTES

1. THESE GENERAL NOTES PRESENT AND/OR SUMMARIZE KEY PROJECT INFORMATION FOR THE DRAWING READER'S CONVENIENCE. SEE ALSO INDIVIDUAL DRAWING NOTES AND PROJECT SPECIFICATIONS FOR FURTHER DETAILS AND REQUIREMENTS.
2. ALL REFERENCED STANDARDS HEREIN ARE TO MOST RECENT ISSUE IN EFFECT AS OF THE DATE OF THESE DOCUMENTS, UNLESS NOTED OTHERWISE IN PROJECT SPECIFICATIONS OR ON THE DRAWING.
3. DATUM ELEVATION IS SITE/CIVIL ELEVATIONS. ALL ELEVATIONS ARE TO BE VERIFIED WITH CIVIL DRAWINGS.
4. ALL EXISTING DIMENSIONS SHOWN WITH THE ± SYMBOL ARE APPROXIMATE AND SHALL BE FIELD VERIFIED BY THE CONTRACTOR BEFORE FABRICATION AND CONSTRUCTION.
5. DIMENSIONS MARKED WITH A "X" SHALL BE DETERMINED BY EQUIPMENT MANUFACTURER AND COORDINATED BY CONTRACTOR
6. SUBMIT SHOP DRAWINGS, PROJECT DATA AND SAMPLES AS SPECIFIED IN PROJECT SPECIFICATIONS.
7. ABBREVIATIONS:

ADD'L	ADDITIONAL	FLG.	FLANGE	ORIG	ORIGINAL
AISC	AMERICAN INSTITUTE OF STEEL CONSTRUCTION	FLR	FLOOR	PERP	PERPENDICULAR
ALUM.	ALUMINUM	FND.	FOUNDATION	PL	PLATE
APPROX.	APPROXIMATE	FRMG	FRAMING	PLF	POUNDS PER LINEAR FOOT
ARCH.	ARCHITECT(URAL)	FT	FOOT	PREFAB	PREFABRICATED
B.M.	BEAM	FTG	FOOTING	PSF	POUNDS PER SQUARE FOOT
B.O.F	BOTTOM OF FOOTING	GA	GAGE, GAUGE	PSI	POUNDS PER SQUARE INCH
B.O.S.	BOTTOM OF STEEL	GALV	GALVANIZED	QTY	QUANTITY
BLDG.	BUILDING	GR.	GRADE	R	RISER
BOT.	BOTTOM	GRTG	GRATING	RAD.	RADIUS
BRG.	BEARING	H.P.	HIGH POINT	REF	REFERENCE
BTWN	BETWEEN	H.R.	HAND RAIL	REINF.	REINFORCEMENT
CCJ	CRACK CONTROL JOINT	HK	HOOK	REQ/REQ'D	REQUIRED
CJ	CONSTRUCTION JOINT	HORIZ	HORIZONTAL	REV	REVISION
CL	CENTER LINE	HR	HEATHER RIDGE	RO	ROUGH OPENING
CLR	CLEAR	HT	HEIGHT	SCHED	SCHEDULE
COH	CITY OF HOUSTON	HVAC	HEATING VENTILATION AND AIR CONDITIONING	SF	SQUARE FOOT
COL	COLUMN	I.D.	INSIDE DIAMETER	SHT.	SHEET
CONC	CONCRETE	I.F.	INSIDE FACE	SIM.	SIMILAR
CONST	CONSTRUCTION	I.J.	ISOLATION JOINT	SM	SHADY MAPLES
CONT	CONTINUOUS	IN.	INCH	SPA.	SPACE
COORD	COORDINATE	INSUL	INSULATION	SPEC	SPECIFICATIONS
CTR	CENTER	L	ANGLE	SQ	SQUARE
DBA	DEFORMED BAR ANCHOR	L.P.	LOW POINT	SS	STAINLESS STEEL
DEMO	DEMOLISH	LBS	POUNDS	STAG.	STAGGER
DIA	DIAMETER	LF	LINEAR FOOT (FEET)	STD	STANDARD
DIM	DIMENSION	LLH	LONG LEG HORIZONTAL	STL	STEEL
DIST	DISTANCE	LLV	LONG LEG VERTICAL	STRUCT	STRUCTURE(AL)
DN	DOWN	LOC	LOCATION	SYM	SYMMETRICAL
DTL.	DETAIL	MATL	MATERIAL	T	TREAD
DWG(S)	DRAWING(S)	MAX	MAXIMUM	T/	TOP OF
DWL	DOWEL	MECH	MECHANICAL	TEMP	TEMPORARY
E/EX/EXIST.	EXISTING	MFR	MANUFACTURER	THK	THICKNESS
EA	EACH	MID	MIDDLE / MIDPOINT	TOF	TOP OF FOOTING
EF	EACH FACE	MIN	MINIMUM, MINUTE	TOS	TOP OF SLAB
EJ	EXPANSION JOINT	MISC.	MISCELLANEOUS	TRANSV.	TRANSVERE
EL / ELEV.	ELEVATION	MTL	METAL	TYP	TYPICAL
ELEC	ELECTRIC(AL)	N	NEW	UNO	UNLESS NOTED OTHERWISE
ENGR	ENGINEER	N.S.	NEAR SIDE	V.I.F.	VERIFY IN FIELD
EQ	EQUAL	N.T.S.	NOT TO SCALE	VERT	VERTICAL
EQUIP	EQUIPMENT	NA	NOT APPLICABLE	W.P.	WORK POINT
EW	EACH WAY	NO	NUMBER	W/	WITH
EXP	EXPANSION	NOM	NOMINAL	W/O	WITHOUT
F.S.	FAR SIDE	O.C.	ON CENTER	WC	WILL CLAYTON
F.V.	FIELD VERIFY	O.D.	OUTSIDE DIAMETER	WS	WATER STOP
FD	FLOOR DRAIN	OPH	OPPOSITE HAND		
FFE	FINISH FLOOR ELEVATION	OPNG	OPENING		
FIN	FINISH (ED)	OPP	OPPOSITE		

FOUNDATIONS

1. **(DRAFT GEOTECH REPORT - FINAL PENDING)** SEE GEOTECHNICAL/SUBSURFACE INVESTIGATION REPORT BY HVJ ASSOCIATES. REPORT DATE FOR EACH RESPECTIVE SITE IS INDICATED BELOW. IT SHALL BE THE CONTRACTOR'S RESPONSIBILITY TO DETERMINE WHETHER OR NOT ADDITIONAL GEOTECHNICAL INFORMATION IS REQUIRED AND TO PROVIDE SUCH INFORMATION AS THE CONTRACTOR DEEMS NECESSARY AT NO ADDITIONAL COST TO THE OWNER.

   A. LAKE VILLAGE REPORT DATED: **JULY 10, 2026**

2. ALLOWABLE BEARING PRESSURES AS FOLLOWS:

   A. LAKE VILLAGE WET WELL MAT FOUNDATIONS: **XXXXX** PSF (BEARING APPROX 35 FT BELOW GRADE)
   B. SHALLOW FOUNDATIONS: **XXXXX** PSF (BEARING NEAR GRADE)

3. GEOTECHNICAL ENGINEER SHALL BE RETAINED BY THE CONTRACTOR TO PROVIDE OBSERVATION AND TESTING SERVICES DURING THE GRADING AND FOUNDATION PHASE OF CONSTRUCTION. INSPECTION AND TESTING REPORTS SHALL BE SUBMITTED TO THE STRUCTURAL ENGINEER.
4. MATERIAL REQUIREMENTS:

   A. STRUCTURAL FILL

      a. THE FOLLOWING FILL MATERIALS ARE ACCEPTABLE FOR BACKFILL PLACED AROUND NEW WET WELL WALLS:
         - CEMENT STABILIZED SAND IN ACCORDANCE WITH COH STANDARD SPECIFICATION SECTION 02321.
         - BANK SAND IN ACCORDANCE WITH COH STANDARD SPECIFICATION SECTION 02316.
         - SELECT FILL CONSISTING OF SANDY CLAY WITH LIQUID LIMIT (LL) LESS THAN 40 AND PLASTICITY INDEX (PI) BETWEEN 8 AND 20.

5. PRIOR TO PLACING ENGINEERED FILL, THE SITE SHALL BE STRIPPED AND PROOF ROLLED. ANY SOFT SPOTS ENCOUNTERED SHALL BE REMOVED AND REPLACED WITH ENGINEERED FILL. REFER TO EARTHWORK SPECIFICATION FOR ADDITIONAL INFORMATION.
6. FOR STRUCTURES WITH CONCRETE TOP SLABS, THERE SHALL BE NO BACKFILLING OPERATIONS UNTIL THE TOP SLAB IS IN PLACE, HAS BEEN CURED A MINIMUM OF 7 DAYS, AND HAS REACHED 70% OF ITS 28 DAY DESIGN STRENGTH, UNLESS NOTED OTHERWISE OR APPROVED BY THE ENGINEER.
7. THERE SHALL BE NO BACKFILLING OPERATIONS UNTIL THE CONCRETE WALLS HAVE REACHED THEIR 28 DAY DESIGN STRENGTH, UNLESS NOTED OTHERWISE OR APPROVED BY THE ENGINEER IN WRITING.
8. HEAVY EQUIPMENT OR WHEELED/TRACKED VEHICLES EXCEEDING 20 PSF CONTACT PRESSURE ARE NOT ALLOWED ON ELEVATED SLABS, ROOFS, OR WITHIN 10 FT OF EARTH RETAINING WALLS UNLESS NOTED OTHERWISE ON PLANS OR APPROVED BY STRUCTURAL ENGINEER OF RECORD PRIOR TO CONSTRUCTION.

DESIGN CRITERIA

1. REFERENCES:

   A. ICC INTERNATIONAL BUILDING CODE, 2021 EDITION, RISK CATEGORY III IN ACCORDANCE WITH TABLE 1604.5
   B. ASCE/SEI 7-16 - MINIMUM DESIGN LOADS FOR BUILDINGS AND OTHER STRUCTURES
   C. CITY OF HOUSTON DEPARTMENT OF PUBLIC WORKS AND ENGINEERING, ENGINEERING DESIGN MANUAL FOR SUBMERSIBLE LIFT STATIONS.

2. DEAD LOADS: = (SELF WEIGHT)
3. LIVE LOADS (U.N.O.):

ELEVATED TOP SLABS	= 300 PSF
STAIRS, WALKWAYS, OR PLATFORMS	= 100 PSF
PROCESS FLOORS	= 200 PSF
VEHICLE SURCHARGE LOAD	= 250 PSF (AT GRADE, ADJACENT TO LIFT STATIONS)

4. FROST DEPTH = 6" (PENDING GEOTECH CONFIRMATION)
5. ROOF SNOW LOAD: = 0 (NOT APPLICABLE)
6. WIND LOAD:

BASIC DESIGN WIND SPEED, V	= 145 MPH
NOMINAL DESIGN WIND SPEED, Vasd	= 113 (Vult*√0.6) MPH
RISK CATEGORY	= III
WIND EXPOSURE CATEGORY	= C
DIRECTIONALITY FACTOR, Kd	= 0.85
TOPOGRAPHIC FACTOR, Kzt	= 1.0
INTERNAL PRESSURE COEFFICIENT, GCpi	= N/A
BUILDING ENCLOSURE CLASSIFICATION	= N/A

7. SEISMIC DESIGN DATA:

RISK CATEGORY	= III
SEISMIC IMPORTANCE FACTOR, Ie	= 1.25
SDS	= 0.072
SD1	= 0.062
SS	= 0.068
S1	= 0.039
SITE CLASS	= D
SEISMIC DESIGN CATEGORY	= A
RESPONSE MODIFICATION FACTOR, R	= 4
BASIC SEISMIC FORCE RESISTING SYSTEM	= ORDINARY REINFORCED CONCRETE WALLS
SEISMIC RESPONSE COEFFICIENT, Cs	= 0.023
DESIGN BASE SHEAR:	= 0.01*W KIPS
ANALYSIS PROCEDURE:	= NOTIONAL LOADS (ASCE 7-16, 1.4)

NO	DATE	REVISION	APP.

A TETRA TECH COMPANY
Texas PE Firm Reg. #F-929
575 N. Dairy Ashford, Suite 700,
Houston, Texas 77079
T +1 281 589 7257
E usinfrastructure@rpsgroup.com

SURVEYED BY: KUO Inc.
FB NO. F-4578

This document is released for the purposes of interim review only under the authority of:

Phillip A. Fleming, P.E.
Texas P.E. No. 131982
8/21/26

It is not to be used for bidding, construction, or permitting purposes.

CITY OF HOUSTON
HOUSTON PUBLIC WORKS

RECONSTRUCTION & REHABILITATION
COH LIFT STATIONS

STRUCTURAL GENERAL NOTES

S-1

WBS NUMBER	FOR CITY OF HOUSTON USE ONLY
R-000267-178A-3	
DRAWING SCALE	
AS NOTED	
CITY OF HOUSTON PM	
TAHA LOTIA	
SHEET NO. 52 OF 147	

PLOTTED 9/2/2026 2:20:43 PM
PLOT STYLE:
Autodesk Docs://200-317106-24001 COH LS Rehab Design/S-LIFT STATIONS-200-317106-24001_v25.rvt

CONCRETE

1. REFERENCES

   A. ACI 318-19 BUILDING CODE REQUIREMENTS FOR STRUCTURAL CONCRETE
   B. ACI 350-06 CODE REQUIREMENTS FOR ENVIRONMENTAL ENGINEERING CONCRETE STRUCTURES
   C. ACI SP-66 ACI DETAILING MANUAL
   D. ACI 301-16 SPECIFICATION FOR STRUCTURAL CONCRETE
   E. ACI 117-10 SPECIFICATION FOR TOLERANCES FOR CONCRETE CONSTRUCTION AND MATERIALS
   F. CRSI MSP-2-01 MANUAL OF STANDARD PRACTICE
   G. CRSI REINFORCING BAR DETAILING
   H. CRSI PLACING REINFORCING BARS

2. MATERIALS

   A. STRUCTURAL CONCRETE

      a. MINIMUM COMPRESSIVE STRENGTH AT 28 DAYS (f'c): 4,500 PSI
      b. UNLESS NOTED OTHERWISE ON THE PLANS, ALL CONCRETE TO HAVE THE FOLLOWING EXPOSURE CLASSIFICATION AS DEFINED IN ACI 318-19, CHAPTER 19: F2, S0, W2, C1
      c. ALL CONCRETE EXPOSED TO THE ELEMENTS SHALL BE AIR-ENTRAINED IN ACCORDANCE WITH ASTM C260. SEE SPECIFICATIONS.
      d. ALL CONCRETE AGGREGATE SHALL COMPLY WITH ASTM C33 (NORMAL WEIGHT).
      e. WATER TO CEMENT RATIO (MAX) = 0.42
      f. WATER-REDUCING ADMIXTURE: ASTM C 494, TYPE A.
      g. PROHIBITED ADMIXTURES: CALCIUM CHLORIDE THYOCYANATES OR ADMIXTURES CONTAINING MORE THAN 0.1 PERCENT CHLORIDE IONS.

   B. REINFORCEMENT

      a. REINFORCING BARS: ASTM A615, GRADE 60

   C. CAST-IN-PLACE ANCHOR RODS

      a. SHALL BE GALVANIZED, FURNISHED WITH CHAMFERED ENDS, AND SHALL MEET STRENGTH AND DUCTILITY REQUIREMENTS EQUIVALENT ASTM F1554, GR 55 WELDABLE MATERIAL.

   D. GROUT: HIGH STRENGTH, NON-SHRINK STRUCTURAL GROUT. SEE SPECIFICATIONS.

3. REINFORCEMENT DETAILING

   A. ALL REINFORCING STEEL DETAILS SHALL BE IN ACCORDANCE WITH THE ACI CODE REQUIREMENTS (ACI 350 - CURRENT EDITION).
   B. REINFORCING STEEL PLACING DRAWINGS AND BAR LISTS SHALL CONFORM TO THE ACI OR CRSI DETAILING MANUALS. ALL BAR SUPPORTS MUST BE CLEARLY DETAILED
   C. CONCRETE COVER FOR REINFORCING SHALL BE INDICATED ON THE APPLICABLE REINFORCING STEEL SHOP DRAWINGS. HOWEVER, NO REINFORCING IN AREAS EXPOSED TO EARTH, WEATHER, SEWAGE OR WATER SHALL HAVE COVER LESS THAN TWO INCHES.
   D. SPECIFIED COVER FOR REINFORCING PER ACI 350 (WATER CONTAINMENT STRUCTURES):

FOOTINGS (BOTTOM)	3.0"
FOOTINGS (TOP)	2.0" (U.N.O.)
BEAMS (PRIMARY REINF)	2.5"
BEAMS (STIRRUPS/ TIES)	2.0"
WALLS	2.0" (U.N.O.)
SUSPENDED SLABS (BOTTOM)	2.0"
SUSPENDED SLABS (TOP)	2.0"
SLAB-ON-GRADE (REBAR)	2" FROM TOP OF SLAB (U.N.O.)

   E. REINFORCEMENT IN WALLS SHALL BE CONTINUOUS. HORIZONTAL BAR LAP SPLICES SHALL BE STAGGERED
   F. PROVIDE CORNER BARS AT ALL WALL AND FOUNDATION CORNERS, AND LAP WITH THE HORIZONTAL BARS. CORNER BARS ARE TO MATCH THE HORIZONTAL BARS IN SIZE, GRADE AND SPACING UNLESS OTHERWISE SHOWN.
   G. HOOKS AND BENDS SHALL MEET ACI STANDARD UNLESS OTHERWISE INDICATED.
   H. SPLICES: CONTINUOUS REINFORCING BARS SHALL BE FURNISHED WITH CLASS 'B' TENSION LAPS SPLICES INCLUDING CORNER BARS, UNLESS NOTED OTHERWISE.
   I. MECHANICAL SPLICES SHALL NOT BE PERMITTED UNLESS SHOWN ON THE DRAWINGS OR APPROVED BY THE ENGINEER
   J. REINFORCING STEEL FABRICATION AND PLACEMENT SHALL BE IN ACCORDANCE WITH CRSI MANUAL OF STANDARD PRACTICE AND CRSI PLACING REINFORCING BARS (LATEST EDITIONS).
   K. REINFORCING STEEL IN FOOTINGS SHALL BE ASSEMBLED IN MAT GRILLES EQUALLY SPACED AND SECURELY WIRED TOGETHER BEFORE THE CONCRETE IS POURED.
   L. WALL FOOTING DOWELS ARE TO HAVE A FULL TENSION LAP SPLICE WITH THE WALL STEEL UNLESS NOTED OTHERWISE.
   M. PIER REINFORCEMENT SHALL BE DOWELED TO THE FOOTING. PROVIDE DOWELS EQUAL IN SIZE, NUMBER AND GRADE TO THE PIER REINFORCEMENT UNLESS OTHERWISE INDICATED. DOWELS SHALL BE HOOKED 90 DEGREES AT THE BOTTOM LEVEL OF FOOTING REINFORCEMENT. DOWELS SHALL BE LAPPED WITH THE PIER REINFORCEMENT
   N. SPREAD BARS AROUND SMALL OPENINGS AND SLEEVES IN SLABS AND WALLS WHERE POSSIBLE AND WHERE BAR SPACING WILL NOT EXCEED 1.5 TIMES THE NORMAL SPACING. DISCONTINUE BARS AT LARGE OPENINGS WHERE NECESSARY AND PROVIDE AN AREA OF REINFORCEMENT EQUAL TO THE INTERRUPTED REINFORCEMENT DISTRIBUTING ONE-HALF OF THIS REINFORCEMENT EACH SIDE OF THE OPENING (TENSION LAP SPLICED). HOLES LARGER THAN 12 INCHES IN ANY DIRECTION SHALL HAVE (2) #6 X 4'-0" DIAGONAL BARS IN BOTH FACES AT EACH CORNER
   O. ALL REINFORCING SHALL BE HELD SECURELY IN POSITION WITH STANDARD ACCESSORIES IN CONCRETE
   P. NO REINFORCING STEEL SHALL BE FIELD BENT WITHOUT THE APPROVAL OF THE STRUCTURAL ENGINEER. FIELD BENDING OF PLAIN REINFORCEMENT, IF PERMITTED, SHALL BE PERFORMED USING AN APPROVED AND APPROPRIATE SIZED PORTABLE HYDRAULIC DEVICE THAT MAKES ACI STANDARD RADIUS BENDS. NO OTHER FIELD BENDING METHOD SHALL BE PERMITTED.
   Q. WELDING, INCLUDING TACK WELDING, FOR REINFORCING STEEL IS PROHIBITED. WELDING OF REINFORCING STEEL AND HIGH STRENGTH BOLTS, IE. A36, F1554, WILL BE PERMITTED ONLY BY WRITTEN APPROVAL OF THE ENGINEER.
   R. ALL OPENINGS THROUGH WALLS, SLABS OR OTHER STRUCTURAL ELEMENTS NOT DETAILED ON THE STRUCTURAL DRAWINGS MUST BE LOCATED BY THE CONTRACTOR AND SHOWN ON THE APPLICABLE REINFORCING STEEL SHOP DRAWINGS. THE FINAL LOCATION OF ALL OPENINGS MUST BE REVIEWED BY THE ENGINEER BEFORE THE CONCRETE IS POURED.
   S. MODIFICATION AND REPAIR TO EXISTING CONCRETE:

      a. SEE CONCRETE SPECIFICATIONS FOR COMPLETE EXPLANATION.
      b. CONNECTION METHODS:

         1. METHOD A - BONDING TO SATURATED SURFACE
         2. METHOD B - BONDING BY USING BONDING AGENT
         3. METHOD C - DOWELS USING EPOXY BONDING AGENT

CONCRETE - (CONTINUED)

4. FORMWORK

   A. SEE SPECIFICATIONS
   B. CAMBER: PROVIDE CAMBER TO COMPENSATE FOR DISPLACEMENT OF FORMS (SEE ALSO SPECS.) AND TO PROVIDE AS-CAST MEMBER CAMBER AS NOTED ON DRAWINGS.
   C. RUSTICATION STRIPS, CHAMFERS, DRIPS, MISC. EMBEDS, ETC. SEE DRAWINGS AND/OR ARCHITECTURAL DRAWINGS.
   D. PROVIDE 3/4" CHAMFER AT ALL EXPOSED CORNERS OF BEAMS, WALLS ETC. UNLESS OTHERWISE NOTED.
   E. OPENINGS FOR MEP TRADES ARE TO BE INCLUDED IN THE BID. ALL HOLES FOR OTHER TRADES WHICH MUST BE CUT OR FORMED AND WHICH ARE NOT SHOWN ON THE STRUCTURAL DESIGN DRAWINGS SHALL BE SUBMITTED TO THE STRUCTURAL ENGINEER FOR REVIEW AND APPROVAL. ANY STRENGTHENING OR ADDITIONAL REINFORCEMENT REQUIRED SHALL BE FURNISHED BY THE CONTRACTOR WITHOUT ADDITIONAL COST TO THE OWNER.

5. CONCRETE FINISHES: SEE SPECIFICATIONS

   A. FORMED SURFACES:

      a. EXPOSED TO VIEW: GROUT CLEANED FINISH
      b. COVERED OR AS NOTED ON PLANS: AS-CAST (PATCH TIE HOLES, SEE SPECS)

   B. FLATWORK:

      a. EXTERIOR SLABS AND PADS, SIDEWALKS, DRIVEWAYS: BROOMED
      b. STAIRS OR RAMPS: BROOMED

6. CURING AND PROTECTION: SEE SPECIFICATIONS.

7. SEE THE MECHANICAL, ELECTRICAL AND SUPPLIERS DRAWINGS AND THE SPECIFICATIONS FOR THE LOCATIONS OF SPECIAL ANCHORS, CHAMFERS, SLEEVES, PIPES, CONDUITS AND OTHER DETAILS NOT SHOWN ON THE STRUCTURAL DRAWINGS.

8. EMBEDDED PIPES OR CONDUIT. MAXIMUM DIAMETER ONE THIRD x SLAB OR WALL THICKNESS, SPACED MINIMUM OF 3 TIMES DIAMETER ON CENTER. ALL EMBEDDED PIPES OR CONDUITS SHALL BE APPROVED BY ENGINEER OF RECORD PRIOR TO INSTALLING

9. SIZE AND LOCATION OF EQUIPMENT PADS AND ANCHOR BOLTS SHALL BE AS REQUIRED BY THE EQUIPMENT MANUFACTURER. ALL CONDUIT PLACED IN SLAB SHALL BE APPROVED BY STRUCTURAL ENGINEER OF RECORD PRIOR TO INSTALLING CONDUIT AND POURING SLAB.

10. ANY CONSTRUCTION JOINTS IN STRUCTURES WHERE WATERSTOPS ARE USED SHALL BE PROTECTED BY WATERSTOP UNLESS OTHERWISE NOTED. CONTRACTOR SHALL SUBMIT A CONSTRUCTION JOINT LAYOUT PLAN FOR APPROVAL BY THE ENGINEER OF RECORD PRIOR TO CONSTRUCTION.

11. CONTRACTOR SHALL DESIGN, FURNISH, INSTALL, TEST, OPERATE, MONITOR, AND MAINTAIN A DEWATERING SYSTEM TO CONTROL HYDROSTATIC PRESSURE AND GROUND WATER ENTERING THE EXCAVATION.

12. SUBMITTALS

   A. CONTRACTOR SHALL BE RESPONSIBLE FOR SUBMITTING THE FOLLOWING DOCUMENTS TO THE ENGINEER OF RECORD:

      a. CONCRETE MIX DESIGN
      b. CONCRETE REINFORCING DRAWINGS

CONCRETE POST-INSTALLED ANCHORS

1. MECHANICAL (TORQUE-CONTROLLED) ANCHORS

   A. APPROVED SYSTEMS INCLUDE HILTI KWIK BOLT TZ (ICC ESR 1917) OR HILTI KWIK HUS-EZ (ICC ESR 3027) OR EQUAL CONSIDERING LOAD RESISTANCE. MECHANICAL ANCHORS SHALL BE APPROVED FOR USE WITH CRACKED CONCRETE PER AC 193. CURRENT ICC-ESR SHALL BE SUBMITTED. ALL PERSONNEL INSTALLING ANCHORS SHALL BE TRAINED BY THE MANUFACTURER ON PROPER INSTALLATION TECHNIQUE. TRAINING DOCUMENTATION FROM THE MANUFACTURER SHALL BE AVAILABLE ON REQUEST

2. ADHESIVE ANCHORS

   A. APPROVED SYSTEMS INCLUDE HILTI HIT-RE 500 V3 (ICC ESR 3814) OR HILTI HIT-HY 200 ADHESIVE WITH HAS/HIT-V THREADED ROD WITH SAFESET TECHNOLOGY (ICC ESR 3187) OR EQUAL CONSIDERING LOAD RESISTANCE, IN-SERVICE AND INSTALLATION TEMPERATURE, AVAILABILITY OR COMPREHENSIVE INSTALLATION INSTRUCTIONS, AND CREEP. ADHESIVE ANCHORS SHALL BE APPROVED FOR USE WITH CRACKED CONCRETE PER AC 308. CURRENT ICC-ESR SHALL BE SUBMITTED.
   B. ALL PERSONNEL INSTALLING ANCHORS SHALL BE TRAINED BY THE MANUFACTURER ON PROPER INSTALLATION TECHNIQUE. TRAINING DOCUMENTATION FROM THE MANUFACTURER SHALL BE AVAILABLE ON REQUEST.
   C. HOLE SIZES AND INSTALLATION SHALL BE IN ACCORDANCE WITH MANUFACTURER'S PRINTED INSTALLATION INSTRUCTIONS (MPII)
   D. ADHESIVE FOR REBAR AND ANCHORS SHALL HAVE BEEN TESTED IN ACCORDANCE WITH ACI 355.4 AND ICC-ES AC308 FOR CRACKED CONCRETE AND SEISMIC APPLICATIONS. DESIGN ADHESIVE BOND STRENGTH SHALL BE BASED ON ACI 355.4 TEMPERATURE CATEGORY C WITH INSTALLATIONS INTO DRY HOLES DRILLED USING A CARBIDE DRILL BIT INTO CONCRETE THAT HAS BEEN CURED FOR AT LEAST 21 DAYS.
   E. ANY ADHESIVE ANCHOR INSTALLED HORIZONTALLY OR IN A VERTICALLY INCLINED PLANE SHALL BE INSTALLED BY CERTIFIED ADHESIVE ANCHOR INSTALLER, PER ACI 318-19 17.8.2.2, AND SHALL BE INSPECTED PER ACI 318-19 17.8.2.4.
   F. FILL IN ALL ABANDONED HOLES WITHIN 2" OF NEW ANCHOR LOCATIONS.
   G. WHERE REQUIRED, A PROGRAM FOR ON-SITE PROOF LOADING, THAT IS, PROOF LOADING PROGRAM, TO BE CONDUCTED AS PART OF THE SPECIAL INSPECTION AND SHALL BE ESTABLISHED BY THE ENGINEER OR DESIGN PROFESSIONAL OF RECORD AND SHALL CONFORM TO THE FOLLOWING MINIMUM REQUIREMENTS:

      a. FREQUENCY OF PROOF LOADING BASED ON ANCHOR TYPE, DIAMETER, AND EMBEDMENT.
      b. PROOF LOADS BY ANCHOR TYPE, DIAMETER, EMBEDMENT, AND LOCATION.
      c. ACCEPTABLE DISPLACEMENTS AT PROOF LOAD.
      d. REMEDIAL ACTION IN THE EVENT OF FAILURE TO ACHIEVE PROOF LOAD OR EXCESSIVE DISPLACEMENT.

      UNLESS OTHERWISE DIRECTED BY THE ENGINEER OR DESIGN PROFESSIONAL OF RECORD, PROOF LOADS SHALL BE APPLIED AS CONFINED TENSION TESTS (4.7.2.3). PROOF LOADS LEVELS SHALL NOT EXCEED THE LESSER OF 50 PERCENT OF THE EXPECTED PEAK LOAD BASED ON ADHESIVE BOND STRENGTH, OR 80 PERCENT OF THE ANCHOR YIELD STRENGTH. MAINTAIN THE PROOF LOAD AT THE REQUIRED LOAD LEVEL FOR A MINIMUM OF 10 SECONDS.

3. EQUIPMENT ANCHORS:
   A. SIZE, LENGTH, AND LOCATION OF EQUIPMENT ANCHORS SHALL BE PROVIDED BY EQUIPMENT MANUFACTURER.

TENSION DEVELOPMENT / LAP SPLICE SCHEDULE (UNCOATED BARS)

BAR SIZE	DEVELOPMENT / LAP SPLICE LENGTH IN CONCRETE (f'c = 4500 PSI)						
	DEVELOPMENT LENGTH (IN)		CLASS 'B' LAP SPLICE LENGTH (IN)		STD 90 DEG. HOOK (IN)		
	BAR TYPE 1	BAR TYPE 2	BAR TYPE 1	BAR TYPE 2	EMBED	LEG LENGTH	BEND DIA.
4	18	27	24	35	9	8	3
5	23	34	30	44	12	10	3 3/4
6	27	41	35	53	14	12	4 1/2
7	40	59	51	77	16	14	5 1/4
8	45	67	59	88	18	16	6
9	51	76	66	99	21	20	9 1/2
10	57	86	74	111	23	22	10 1/4

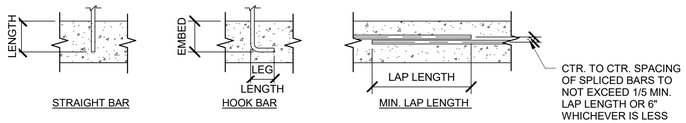

BAR TYPE 1 - CLEAR SPACING OF BARS BEING DEVELOPED OR SPLICED NOT LESS THAN Db, CLEAR COVER NOT LESS THAN Db, AND STIRRUPS OR TIES THROUGHOUT Ld NOT LESS THAN CODE MINIMUM

OR

CLEAR SPACING OF BARS BEING DEVELOPED OR SPLICED NOT LESS THAN 2*Db AND CLEAR COVER NOT LESS THAN Db.

BAR TYPE 2 - TOP BARS WITH MORE THAN 12" OF FRESH CONCRETE CAST BELOW **AND** OTHER CASES

NO	DATE	REVISION	APP.

A TETRA TECH COMPANY
Texas PE Firm Reg. #F-929
575 N. Dairy Ashford, Suite 700,
Houston, Texas 77079
T +1 281 589 7257
E usinfrastructure@rpsgroup.com

SURVEYED BY: KUO Inc.
FB NO. F-4578

This document is released for the purposes of interim review only under the authority of:

Phillip A. Fleming, P.E.
Texas P.E. No. 131982
8/21/26

It is not to be used for bidding, construction, or permitting purposes.

CITY OF HOUSTON
HOUSTON PUBLIC WORKS

RECONSTRUCTION & REHABILITATION
COH LIFT STATIONS

STRUCTURAL GENERAL NOTES

S-2

WBS NUMBER	FOR CITY OF HOUSTON USE ONLY
R-000267-178A-3	
DRAWING SCALE	
AS NOTED	
CITY OF HOUSTON PM	
TAHA LOTIA	
SHEET NO. 53 OF 147	

PLOTTED 9/2/2026 2:20:43 PM
PLOT STYLE:
Autodesk Docs://200-317106-24001 COH LS Rehab Design/S-LIFT STATIONS-200-317106-24001_v25.rvt

PLAN NOTES:

1. SEE SHEETS S-1 THROUGH S-2 FOR GENERAL NOTES AND DESIGN CRITERIA.
2. REFER TO CIVIL FOR STRUCTURE LOCATION, FINAL ELEVATIONS, AND ORIENTATION ON SITE.
3. COORDINATE ALL PIPE LOCATIONS, PENETRATIONS, AND ELEVATIONS WITH PROCESS, MECHANICAL, AND CIVIL DRAWINGS.
4. PROVIDE ADDITIONAL REINFORCEMENT AROUND CONCRETE OPENINGS PER TYPICAL DETAIL 1 / STD-S-1 .
5. ALUMINUM ACCESS HATCHES SHALL BE FLOODTIGHT, RATED FOR 625 PSF MINIMUM UNIFORM LIVE LOAD (10 FT HEAD OF WATER), AND INCLUDE SAFETY GRATING. CONTRACTOR SHALL CONFIRM SIZE AND LOCATION OF ACCESS HATCH OPENINGS ACCORDING TO THE SELECTED HATCH AND PUMP MANUFACTURERS' REQUIREMENTS. REFER TO SPEC "08310 - ACCESS HATCHES" FOR ADDITIONAL REQUIREMENTS.
6. WALLS MAY BE BACKFILLED AND LEAK TEST PERFORMED PRIOR TO CONSTRUCTION OF TOP SLAB.

NO	DATE	REVISION	APP.

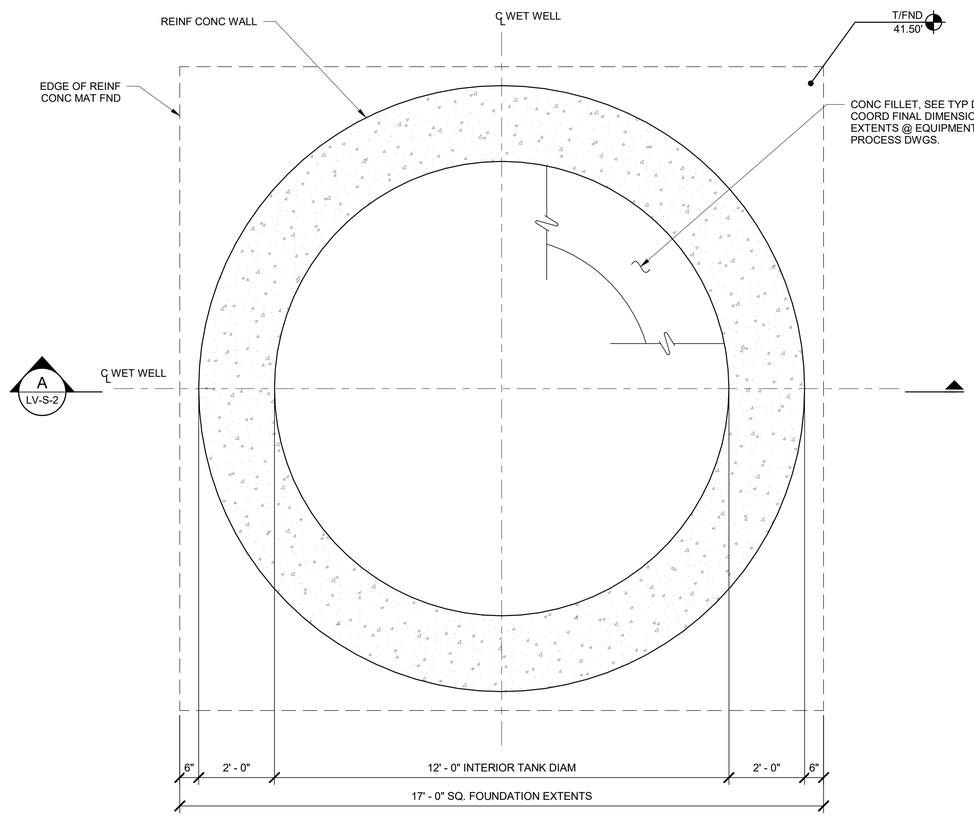

LAKE VILLAGE FND PLAN

SCALE: 1/2" = 1'-0"

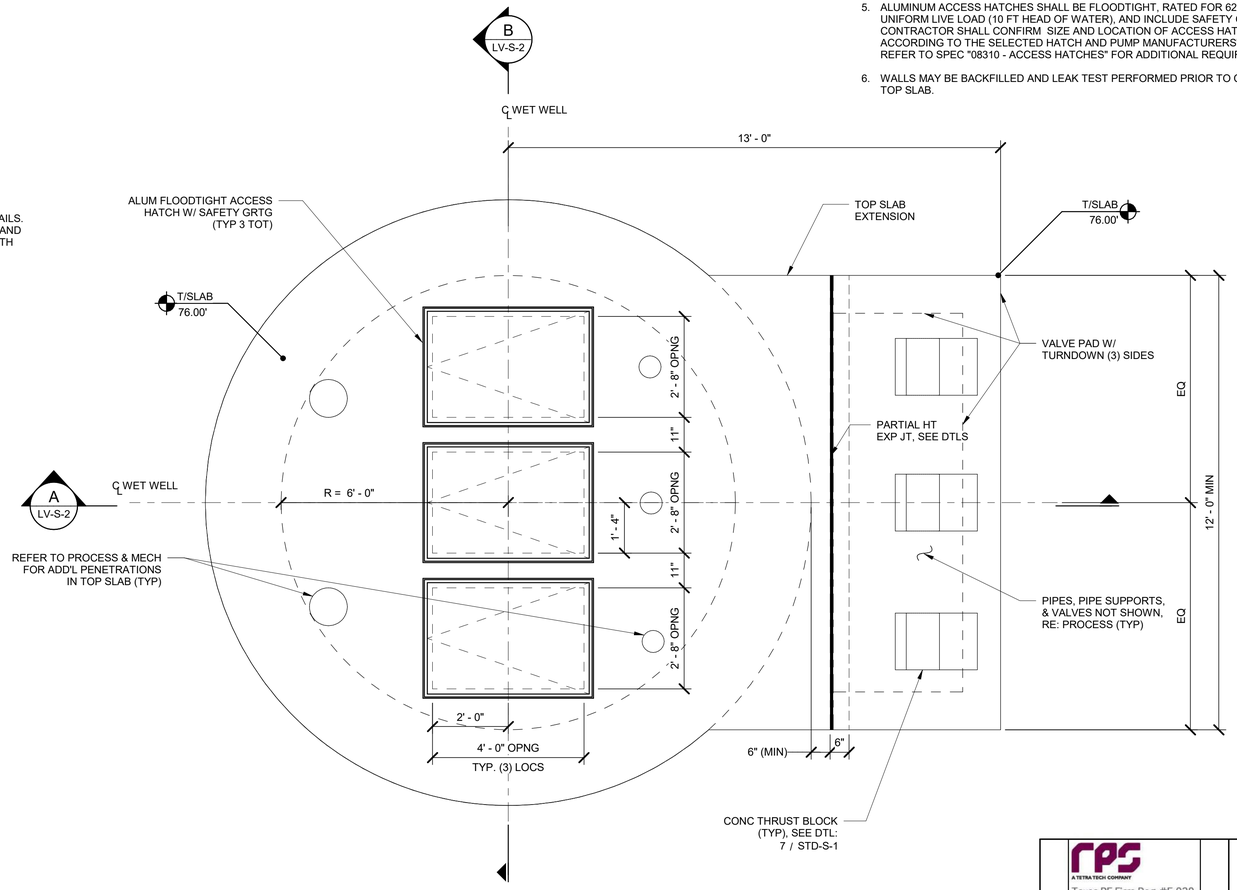

LAKE VILLAGE TOP SLAB PLAN

SCALE: 1/2" = 1'-0"

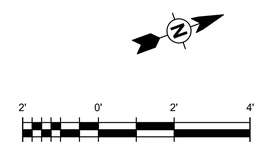

SCALE: 1/2" = 1'-0"

A TETRA TECH COMPANY
Texas PE Firm Reg. #F-929
575 N. Dairy Ashford, Suite 700,
Houston, Texas 77079
T +1 281 589 7257
E usinfrastructure@rpsgroup.com

SURVEYED BY: KUO Inc.
FB NO. F-4578

This document is released for the purposes of interim review only under the authority of:

Phillip A. Fleming, P.E.
Texas P.E. No. 131982
8/21/26

It is not to be used for bidding, construction, or permitting purposes.

CITY OF HOUSTON

HOUSTON PUBLIC WORKS

RECONSTRUCTION & REHABILITATION
COH LIFT STATIONS

LAKE VILLAGE LS STRUCTURAL PLANS

LV-S-1

WBS NUMBER	FOR CITY OF HOUSTON USE ONLY
R-000267-178A-3	
DRAWING SCALE	
AS NOTED	
CITY OF HOUSTON PM	
TAHA LOTIA	
SHEET NO. 54 OF 147	

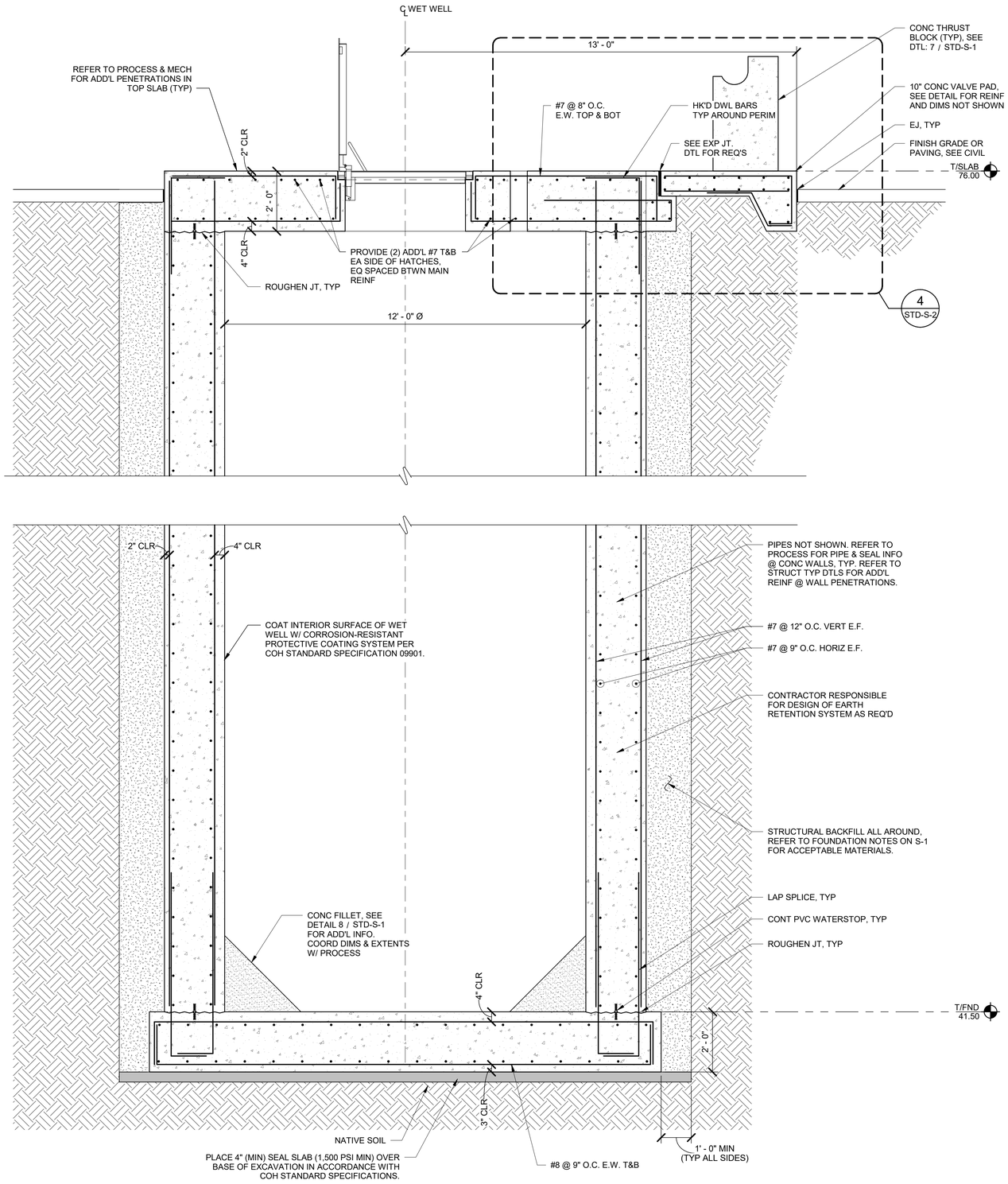

A SECTION
LV-S-2 SCALE: 1/2" = 1'-0"

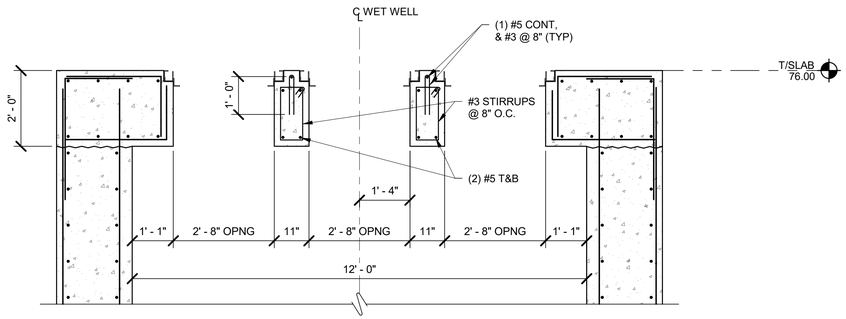

B SECTION
LV-S-2 SCALE: 1/2" = 1'-0"

2' 0' 2' 4'
SCALE: 1/2" = 1'-0"

NO.	DATE	REVISION	APP.

RPS A TETRA TECH COMPANY
Texas PE Firm Reg. #F-929
575 N. Dairy Ashford, Suite 700, Houston, Texas 77079
T +1 281 589 7257
E usinfrastructure@rpsgroup.com

SURVEYED BY: KUO Inc.
FB NO. F-4578

This document is released for the purposes of interim review only under the authority of:

Phillip A. Fleming, P.E.
Texas P.E. No. 131982
8/21/26

It is not to be used for bidding, construction, or permitting purposes.

CITY OF HOUSTON
HOUSTON PUBLIC WORKS

RECONSTRUCTION & REHABILITATION
COH LIFT STATIONS

LAKE VILLAGE LS STRUCTURAL SECTIONS

LV-S-2

WBS NUMBER	FOR CITY OF HOUSTON USE ONLY
R-000267-178A-3	
DRAWING SCALE	
AS NOTED	
CITY OF HOUSTON PM	
TAHA LOTIA	
SHEET NO. 55 OF 147	

PLOTTED 9/2/2026 2:20:43 PM
PLOT STYLE:
Autodesk Docs://200-317106-24001 COH LS Rehab Design/S-LIFT STATIONS-200-317106-24001_v25.rvt

PLOTTED 9/2/2026 2:20:44 PM
PLOT STYLE:
Autodesk Docs://200-317106-24001 COH LS Rehab Design/S-LIFT STATIONS-200-317106-24001_v25.rvt

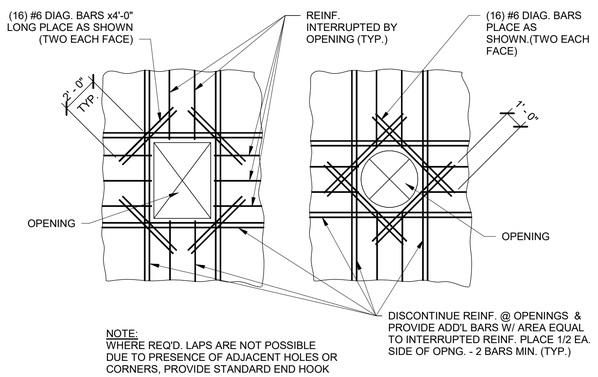

1 STD-S-1 REINF. STEEL @ OPENING
SCALE: NTS

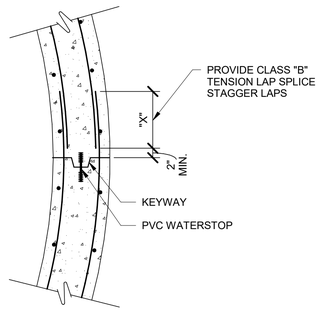

2 STD-S-1 WALL JOINT
SCALE: NTS

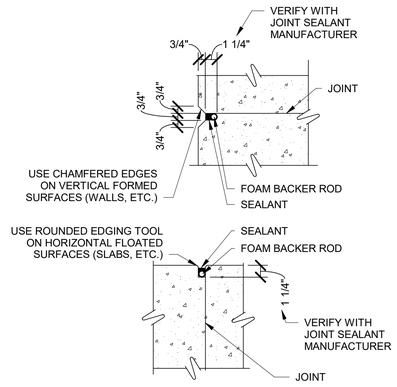

3 STD-S-1 CONTROL JOINT SEALANT
SCALE: NTS

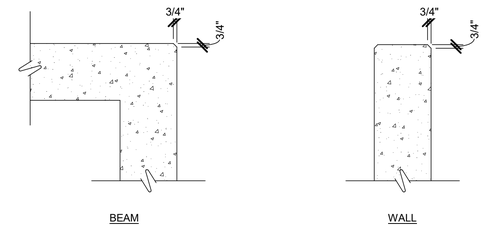

4 STD-S-1 CHAMFER DETAILS
SCALE: NTS

NO.	DATE	REVISION	APP.

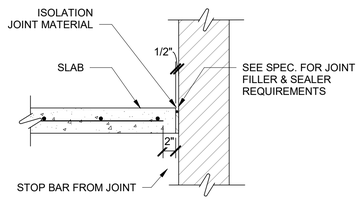

5 STD-S-1 SLAB TO WALL ISOLATION JOINT
SCALE: NTS

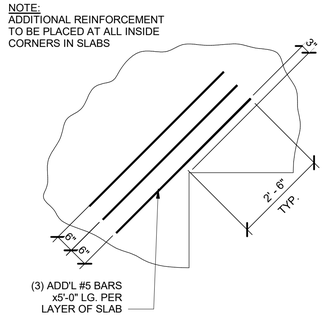

6 STD-S-1 REINF. SLAB RE-ENTRANT CORNER
SCALE: NTS

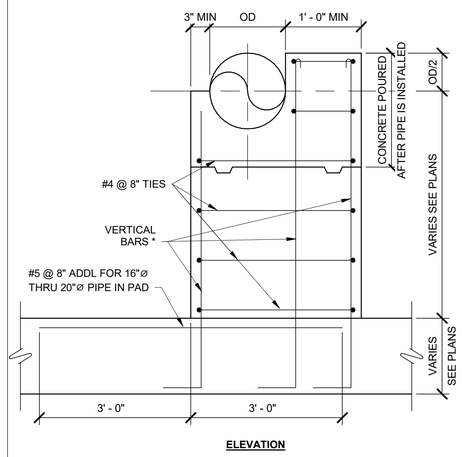

*VERTICAL BARS

PIPE DIA	NO. OF VERT BARS
4" - 8"	3 - 2#5
10" - 12"	3 - 3#5
14" - 16"	3 - 4#5
18" - 20"	3 - 4#5

7 STD-S-1 TYPICAL THRUST BLOCK DETAILS
SCALE: NTS

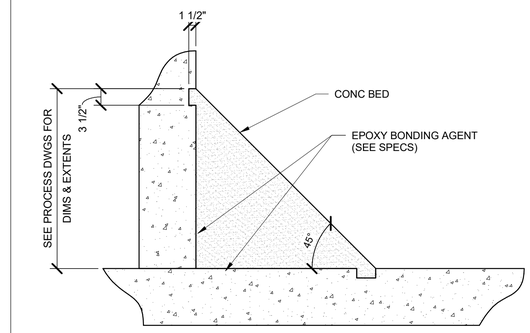

8 STD-S-1 CONCRETE FILLET DETAIL
SCALE: NTS

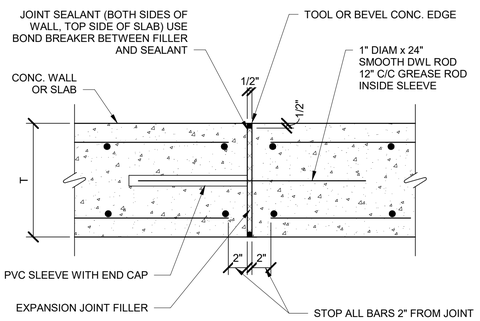

9 STD-S-1 EXPANSION JOINT
SCALE: NTS

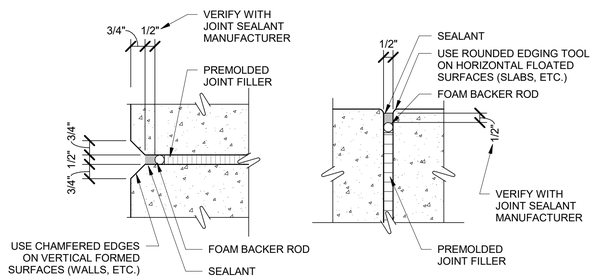

10 STD-S-1 EXPANSION JOINT SEALANT DETAIL
SCALE: NTS

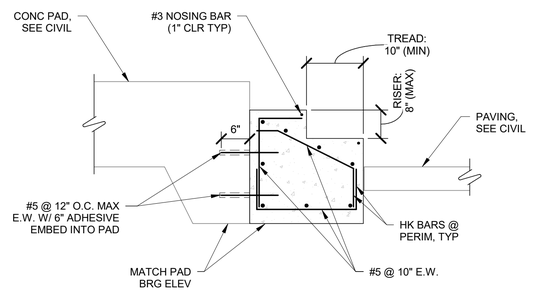

NOTES:
1. SEE CIVIL FOR STAIR LOCATIONS ON SITE AND PAD AND PAVING ELEVATIONS.
2. CONTRACTOR SHALL VERIFY ACTUAL NUMBER OF RISERS REQUIRED BASED ON FINAL ELEVATIONS. RISERS SHALL BE EQUAL HEIGHTS.
3. TOP SURFACE OF STEPS SHALL HAVE HORIZONTAL BROOM FINISH.

11 STD-S-1 TYPICAL STAIR DETAIL
SCALE: 3/4" = 1'-0"

RPS
A TETRA TECH COMPANY
Texas PE Firm Reg. #F-929
575 N. Dairy Ashford, Suite 700, Houston, Texas 77079
T +1 281 589 7257
E usinfrastructure@rpsgroup.com

SURVEYED BY: KUO Inc.
FB NO. F-4578

This document is released for the purposes of interim review only under the authority of:
Phillip A. Fleming, P.E.
Texas P.E. No. 131982
8/21/26
It is not to be used for bidding, construction, or permitting purposes.

CITY OF HOUSTON
HOUSTON PUBLIC WORKS

RECONSTRUCTION & REHABILITATION
COH LIFT STATIONS

STRUCTURAL STANDARD DETAILS

STD-S-1

WBS NUMBER	FOR CITY OF HOUSTON USE ONLY
R-000267-178A-3	
DRAWING SCALE	
AS NOTED	
CITY OF HOUSTON PM	
TAHA LOTIA	
SHEET NO. 56 OF 147	

PLOTTED 9/2/2026 2:20:44 PM
PLOT STYLE:
Autodesk Docs://200-317106-24001 COH LS Rehab Design/S-LIFT STATIONS-200-317106-24001_v25.rvt

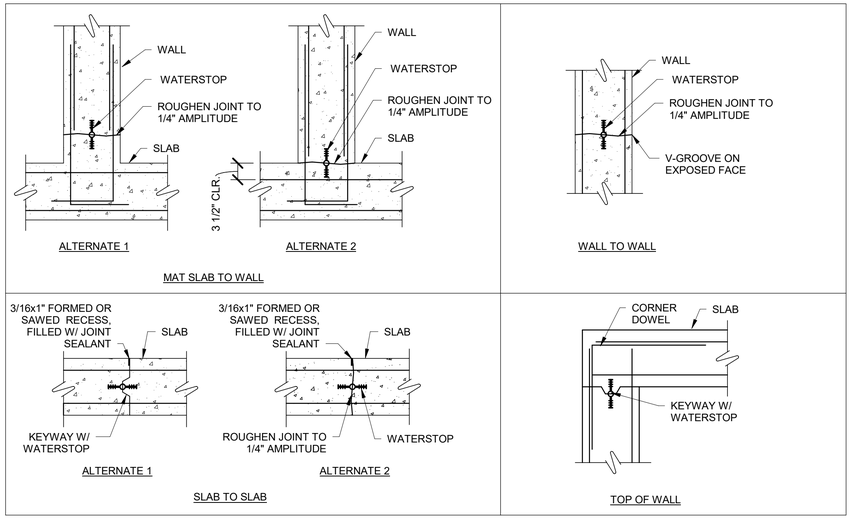

WATERTIGHT CONSTRUCTION JOINTS
6"x3/8" PVC WATERSTOP (SIKA GREEN STREAK PROFILE NO. 732) SHALL BE USED ALL LOCATIONS.

1 WATERSTOP CONSTRUCTION JOINTS
STD-S-2 SCALE: NTS

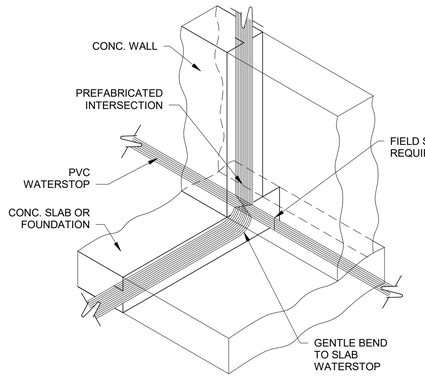

TYP. WATERSTOP AT SLAB AND WALL

SEE DETAIL 1 ON THIS SHEET FOR PVC WATERSTOP SIZE.

2 WATERSTOP AT SLAB & WALL
STD-S-2 SCALE: NTS

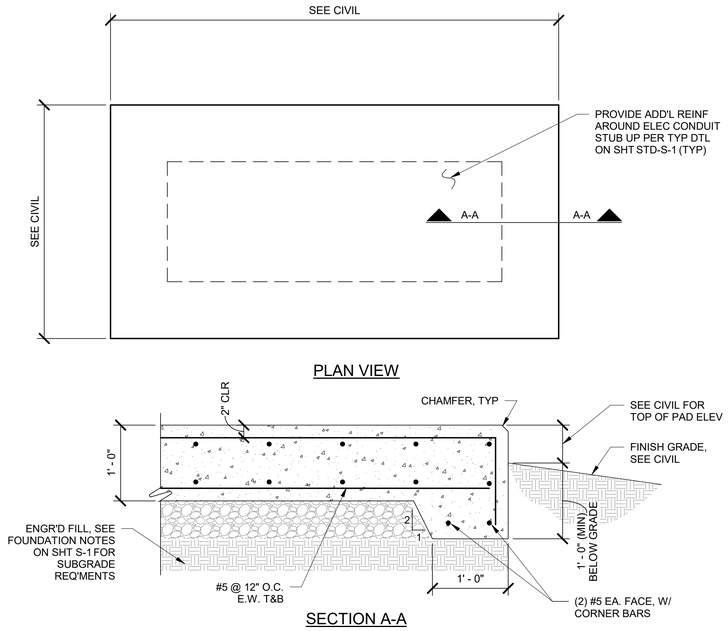

NOTES:
1. SEE CIVIL FOR PAD SIZES, LOCATIONS, ELEVATIONS, AND SLOPE REQUIREMENTS.
2. COORDINATE EQUIPMENT REQUIREMENTS WITH MECHANICAL AND ELECTRICAL.
3. PROVIDE A BROOM FINISH TO TOP CONCRETE SURFACE.
4. THIS DETAIL SHALL NOT BE USED FOR GENERATORS - SEE OTHER DETAIL THIS SHEET.

3 TYPICAL EQUIPMENT PAD DETAIL (NON-GENERATOR)
STD-S-2 SCALE: NTS

NO.	DATE	REVISION	APP.

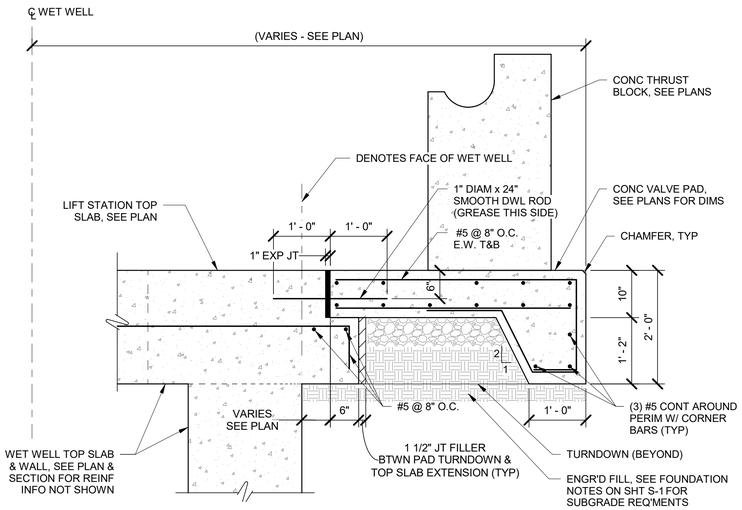

4 TYP NEW VALVE PAD DTL @ NEW WET WELL
STD-S-2 SCALE: NTS

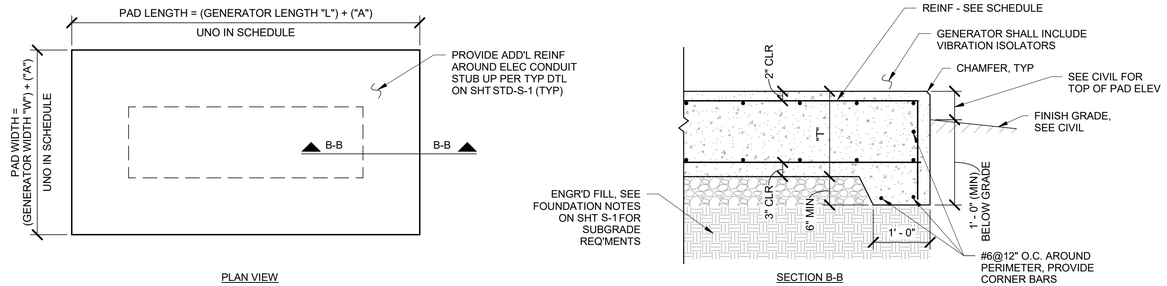

NOTES:
1. SEE CIVIL FOR PAD LOCATION ON SITE.
2. COORDINATE PAD WIDTH AND LENGTH WITH GENERATOR MFR AND CONTRACT DRAWINGS. PROVIDE SCHEDULED CLEARANCE AROUND THE PERIMETER BETWEEN THE OUTSIDE EDGE OF PAD AND OUTERMOST PORTION OF GENERATOR.
3. COORDINATE SIZE AND LOCATION OF REQ'D OPENINGS W/ GENERATOR MFR.
4. PROVIDE A BROOM FINISH TO TOP CONCRETE SURFACE.
5. ANCHOR GENERATOR TO CONC PER MFR RECOMMENDATIONS.
6. COORD DRAIN AND CONC SLOPE REQUIREMENTS

GENERATOR PAD SCHEDULE

SITE LOCATION	"A"	"W"	"L"	"T"	REINFORCEMENT	MODEL	MAX OPERATING WEIGHT	NOTES
LAKE VILLAGE	(SEE NOTES COLUMN)			1'-6"	#6 @ 10" O.C. EW, T&B	-	3,500 LB	REFER TO CIVIL FOR PAD DIMS REQ'D TO SUPPORT ADD'L ELEC EQUIP.
-	-	-	-	-	-	-	-	
-	-	-	-	-	-	-	-	
-	-	-	-	-	-	-	-	

5 TYPICAL GENERATOR PAD DETAIL
STD-S-2 SCALE: NTS

RPS
A TETRA TECH COMPANY
Texas PE Firm Reg. #F-929
575 N. Dairy Ashford, Suite 700, Houston, Texas 77079
T +1 281 589 7257
E usinfrastructure@rpsgroup.com

SURVEYED BY: KUO Inc.
FB NO. F-4578

This document is released for the purposes of interim review only under the authority of:

Phillip A. Fleming, P.E.
Texas P.E. No. 131982
8/21/26

It is not to be used for bidding, construction, or permitting purposes.

CITY OF HOUSTON
HOUSTON PUBLIC WORKS

RECONSTRUCTION & REHABILITATION
COH LIFT STATIONS

STRUCTURAL STANDARD DETAILS

STD-S-2

WBS NUMBER	FOR CITY OF HOUSTON USE ONLY
R-000267-178A-3	
DRAWING SCALE	
AS NOTED	
CITY OF HOUSTON PM	
TAHA LOTIA	
SHEET NO. 57 OF 147	

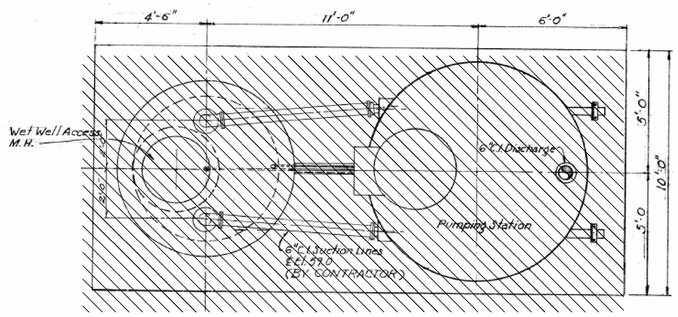

PLAN ON SLAB AT EL 57.0

Scale: 3/8"=1'-0"

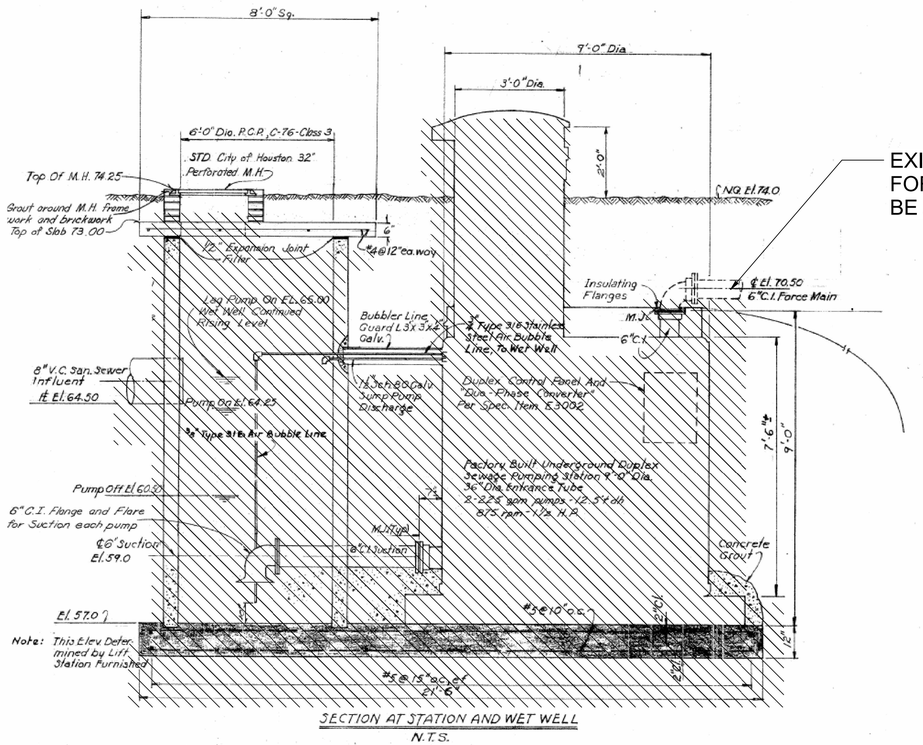

SECTION AT STATION AND WET WELL

N.T.S.

EXISTING 6" FORCE MAIN TO BE ABANDONDED.

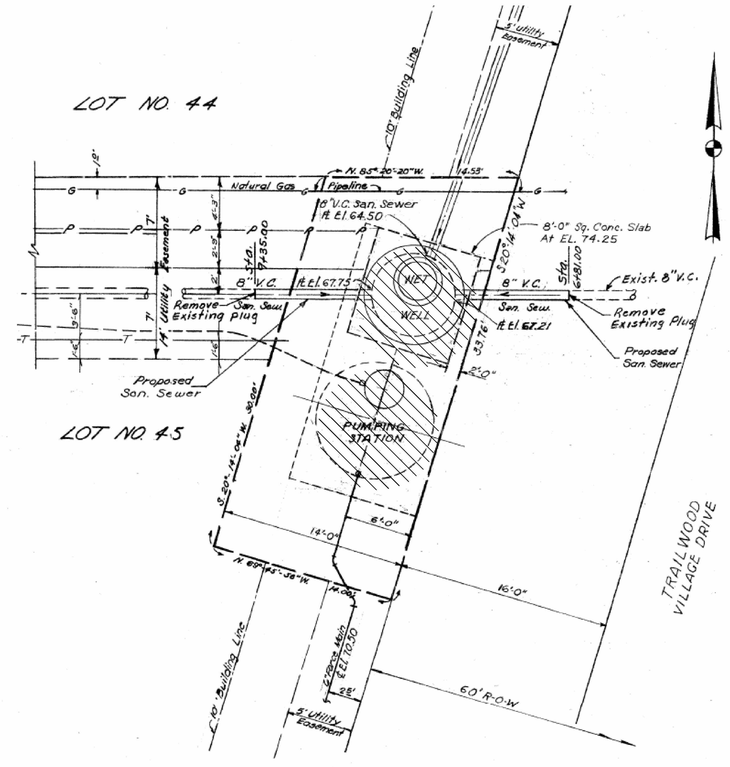

LIFT STATION PLOT PLAN

1" = 5'-0"

-ITEMS TO BE REMOVED

NOTES:

1. CONTRACTOR TO REMOVE AND SALVAGE ALL EXISTING PUMPS, VALVES, AND APPURTENANCES

NO.	DATE	REVISION	APP.

rps A TETRA TECH COMPANY
Texas PE Firm Reg. #F-929
575 N. Dairy Ashford, Suite 700, Houston, Texas 77079
T +1 281 589 7257
E usinfrastructure@rpsgroup.com

SURVEYED BY: KUCO INC.

FB NO. F-4578

This document is released for the purposes of interim review only under the authority of:

Jeremy Austin, P.E.
Texas P.E. No. 116816
08/21/2026

It is not to be used for bidding, construction, or permitting purposes.

CITY OF HOUSTON

HOUSTON PUBLIC WORKS

RECONSTRUCTION & REHABILITATION
COH LIFT STATIONS

TRAILWOOD LIFT STATION DEMOLITION PLAN

D-1

WBS NUMBER	FOR CITY OF HOUSTON USE ONLY
R-000267-178A-3	
DRAWING SCALE	
AS NOTED	
CITY OF HOUSTON PM	
TAHA LOTIA	
SHEET NO. 58 OF 147	

PLOTTED: 8/20/2026 11:55:42 AM
PLOT STYLE:
Autodesk Docs://200-317106-24001 COH LS Rehab Design/D-LIFT STATIONS-200-317106-24001_v25.rvt

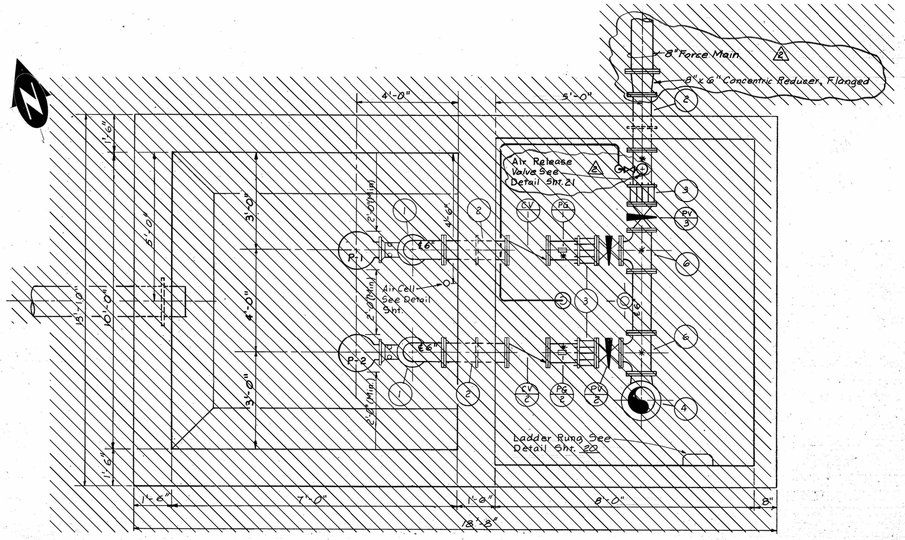

PLAN AT ELEVATION 72.00
N.T.S.

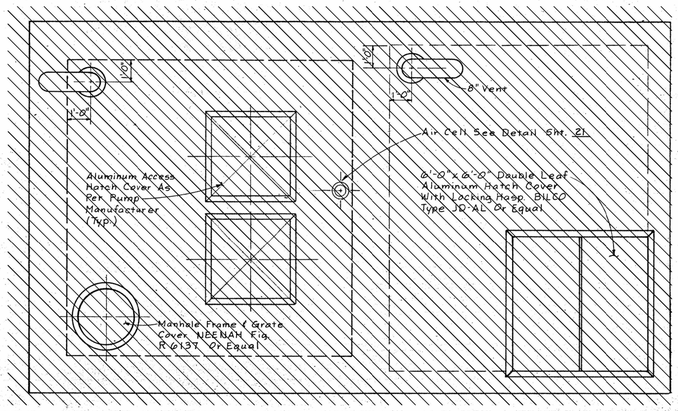

PLAN AT ELEVATION 78.00
N.T.S.

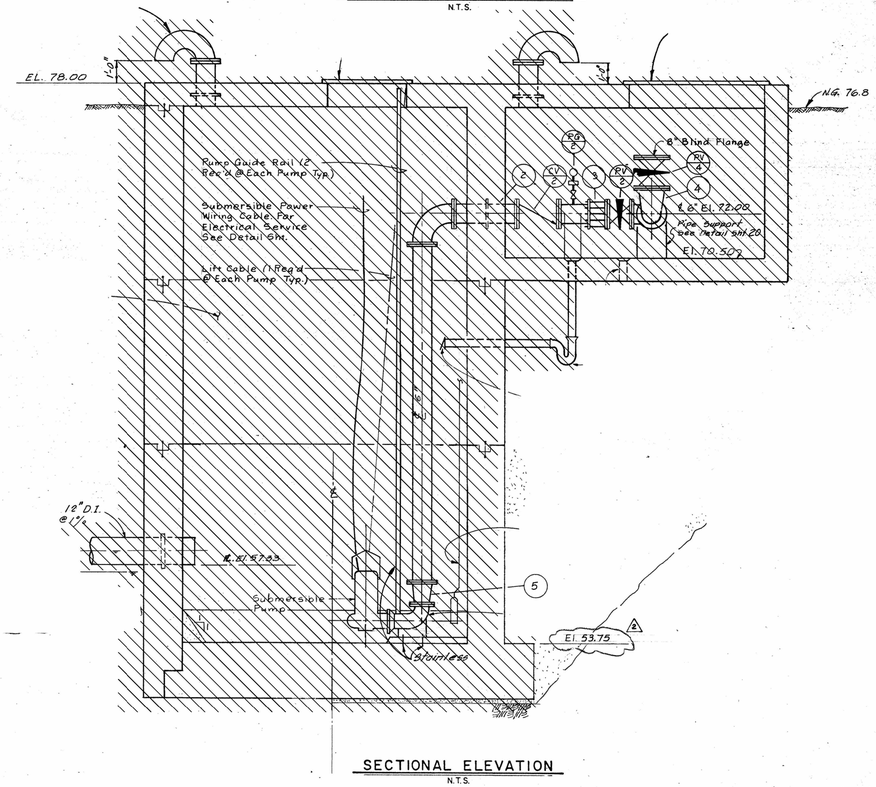

SECTIONAL ELEVATION
N.T.S.

-ITEMS TO BE REMOVED

NOTES:

1. CONTRACTOR TO REMOVE AND SALVAGE ALL EXISTING PUMPS, VALVES, AND APPURTENANCES

NO	DATE	REVISION	APP.

A TETRA TECH COMPANY
Texas PE Firm Reg. #F-929
575 N. Dairy Ashford, Suite 700, Houston, Texas 77079
T +1 281 589 7257
E usinfrastructure@rpsgroup.com

SURVEYED BY: KUCO INC.
FB NO. F-4578

This document is released for the purposes of interim review only under the authority of:

Jeremy Austin, P.E.
Texas P.E. No. 116816
08/21/2026

It is not to be used for bidding, construction, or permitting purposes.

CITY OF HOUSTON
HOUSTON PUBLIC WORKS

RECONSTRUCTION & REHABILITATION
COH LIFT STATIONS

LAKE VILLAGE LIFT STATION DEMOLITION PLAN

D-2

WBS NUMBER	FOR CITY OF HOUSTON USE ONLY
R-000267-178A-3	
DRAWING SCALE	
AS NOTED	
CITY OF HOUSTON PM	
TAHA LOTIA	
SHEET NO. 59 OF 147	

PLOTTED: 8/20/2026 11:55:47 AM
PLOT STYLE:
Autodesk Docs://200-317106-24001 COH LS Rehab Design/D-LIFT STATIONS-200-317106-24001_v25.rvt

NOTES:
1. SEE DETAIL AND STRUCTURAL DRAWINGS FOR DIMENSIONS AND INFORMATION NOT SHOW.
2. ALL PIPING TO BE FLANGED, NO FLANGED COUPLING ADAPTERS OR VICTAULIC STYLE COUPLINGS PERMITTED.
3. DIMENSIONS NOTED ARE RELATIVE TO THE PUMP SIZE AND MANUFACTURER SELECTED. CONTRACTOR SHALL VERIFY.
4. INSTALL PLUG VALVES TO OPEN UPWARD AND CLOSE TO A SEATED POSITION.
5. INSTALL CHECK VALVES SO THAT THE WEIGHT LEVER POSITION IS APPROXIMATELY 45 DEGREES BELOW THE VALVE HORIZONTAL CENTER LINE IN THE CLOSED POSITION; AND APPROXIMATELY 45 DEGREES ABOVE THE VALVE HORIZONTAL CENTER LINE IN THE FULL OPEN POSITION.
6. LABEL HATCHES WITH THE CORRESPONDING PUMP NUMBER USING A 12-INCH BY 12-INCH 316SS PLATE ENGRAVED WITH 6-INCH LETTERING WELDED TO THE HATCH.
7. PUMP BASIS OF DESIGN IS FLYGT NP 3153 SH 3~ 276 WITH 158 MM DIAMETER IMPELLER. REFER TO SPECIFICATIONS FOR PUMP SELECTION CRITERIA.

SYSTEM HEAD CURVE NOTES:
1. MAXIMUM SYSTEM CURVE C=140
2. DESIGN SYSTEM CURVE C=120
3. MINIMUM SYSTEM CURVE C=100

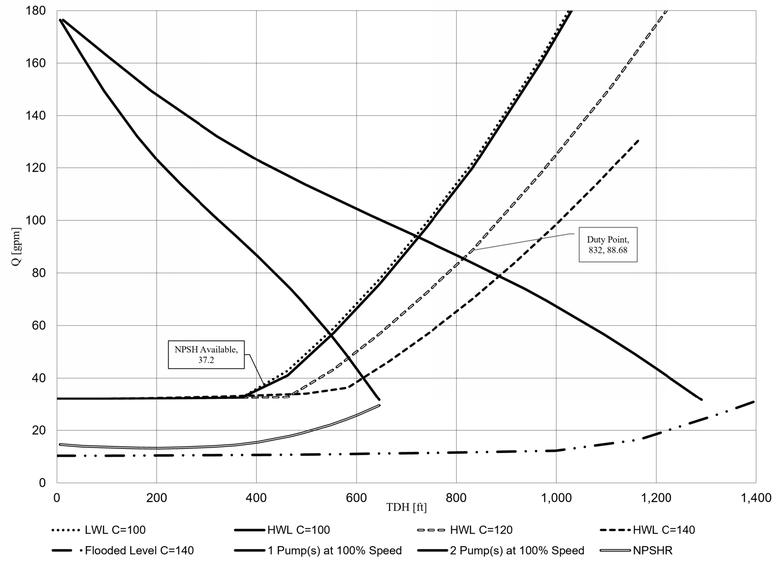

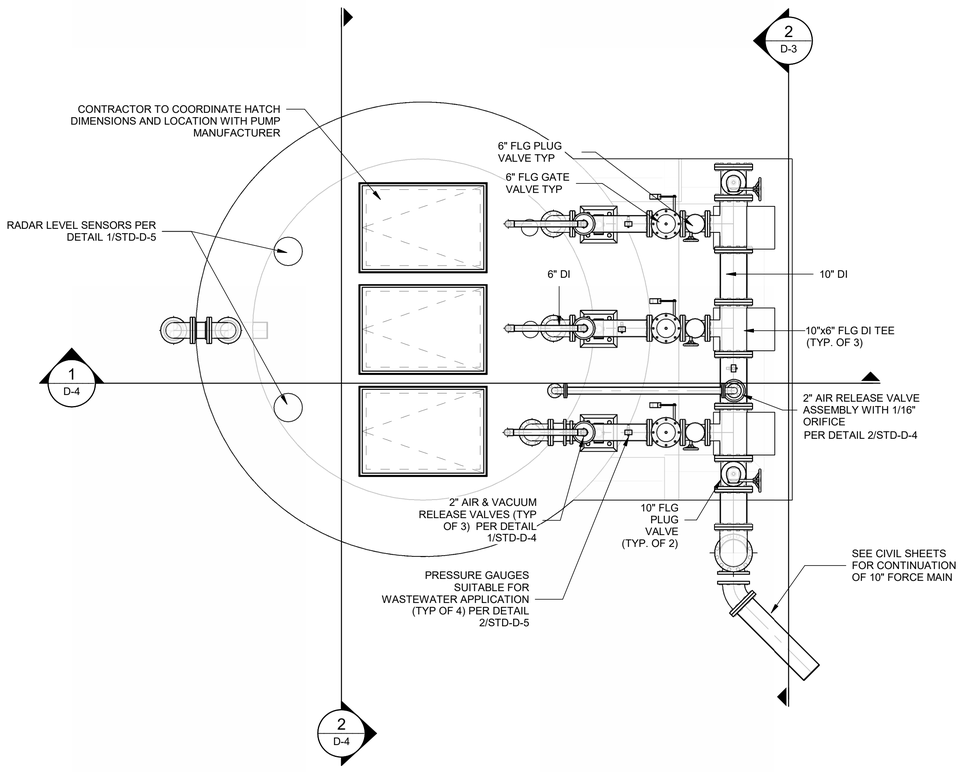

1 LAKE VILLAGE PLAN VIEW
SCALE: 3/8" = 1'-0"

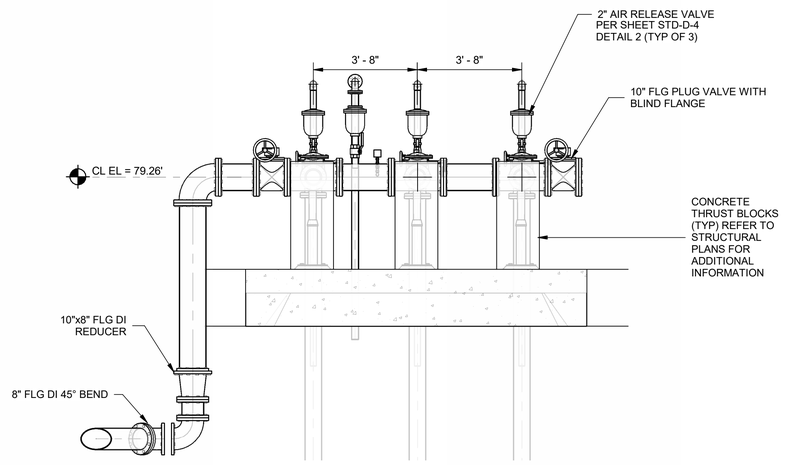

2 DISCHARGE PIPING
SCALE: 3/8" = 1'-0"

8' 0' 8' 16'
SCALE: 1/8" = 1'-0"

NO.	DATE	REVISION	APP.

RPS A TETRA TECH COMPANY
Texas PE Firm Reg. #F-929
575 N. Dairy Ashford, Suite 700, Houston, Texas 77079
T +1 281 589 7257
E usinfrastructure@rpsgroup.com

SURVEYED BY:
FB NO.

This document is released for the purposes of interim review only under the authority of:

Jeremy Austin, P.E.
Texas P.E. No. 116816
08/21/2026

It is not to be used for bidding, construction, or permitting purposes.

CITY OF HOUSTON
HOUSTON PUBLIC WORKS

RECONSTRUCTION & REHABILITATION
COH LIFT STATIONS

LAKE VILLAGE LS PLANS AND SECTIONS

D-3

WBS NUMBER	FOR CITY OF HOUSTON USE ONLY
R-000267-178A-3	
DRAWING SCALE	
AS NOTED	
CITY OF HOUSTON PM	
TAHA LOTIA	
SHEET NO. 60 OF 147	

PLOTTED: 9/4/2026 12:32:57 PM
PLOT STYLE:
Autodesk Docs://200-317106-24001 COH LS Rehab Design/D-LIFT STATIONS-200-317106-24001_v25.rvt

NOTES:
1. SEE DETAIL AND STRUCTURAL DRAWINGS FOR DIMENSIONS AND INFORMATION NOT SHOWN.
2. ALL PIPING TO BE FLANGED, NO FLANGED COUPLING ADAPTERS OR VICTAULIC STYLE COUPLINGS PERMITTED.
3. DIMENSIONS NOTED ARE RELATIVE TO THE PUMP SIZE AND MANUFACTURER SELECTED. CONTRACTOR SHALL VERIFY.
4. INSTALL CHECK VALVES SO THAT THE WEIGHT LEVER POSITION IS APPROXIMATELY 45 DEGREES BELOW THE VALVE HORIZONTAL CENTER LINE IN THE CLOSED POSITION; AND APPROXIMATELY 45 DEGREES ABOVE THE VALVE HORIZONTAL CENTER LINE IN THE FULL OPEN POSITION.
5. PUMP ANCHOR BOLTS ARE TO BE ADHESIVE TYPE, AND EMBEDDED IN CONCRETE SLAB. CONTRACTOR TO SUBMIT DESIGN OF PUMP ANCHOR BOLDS AND PATTERN, INCLUDING CALCULATIONS, DURING SHOP DRAWING SUBMISSION.

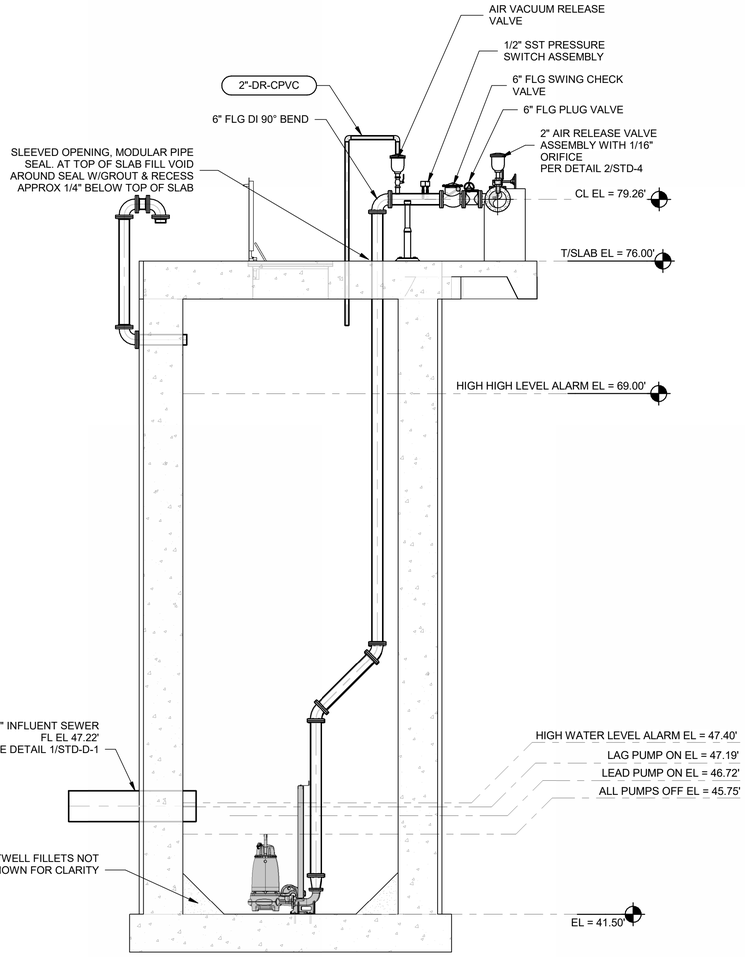

1 WET WELL SECTION VEIW
SCALE: 1/4" = 1'-0"

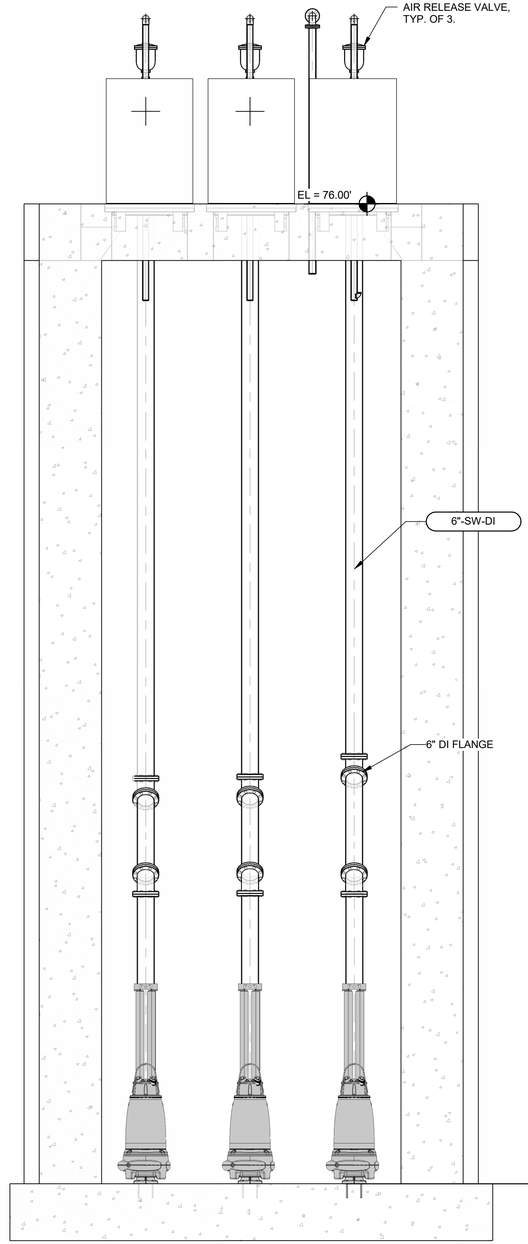

2 WET WELL SECTION VIEW
SCALE: 3/8" = 1'-0"

RISING LEVEL CYCLE			
WATER LEVEL DEPTH	WATER LEVEL ELEVATION	ACTION	PUMP(S) IN OPERATION
4.25	45.75	PUMPS OFF - NO ACTION	ALL PUMPS OFF
5.22	46.72	LEAD PUMP TURNS ON	LEAD PUMP ON
5.69	47.19	LAG PUMP TURNS ON	LEAD & LAG PUMP ON
5.90	47.40	HIGH WATER LEVEL ALARM ON	HIGH WATER LEVEL ALARM SOUND
27.50	69.00	HIGH HIGH LEVEL ALARM (FLOAT ON LEVEL)	ALL PUMPS ON (FLOATS)
FALLING LEVEL CYCLE			
WATER LEVEL DEPTH	WATER LEVEL ELEVATION	ACTION	PUMP(S) IN OPERATION
5.69	47.24	HIGH WATER LEVEL ALARM OFF	LEAD & LAG PUMPS ON
5.69	47.19	LEAD PUMP TURNS OFF	LAG PUMP ON
5.22	46.72	LAG PUMP TURNS OFF	ALL PUMPS STOPPED - STANDBY PUMP SWITCHES TO LEAD PUMP
1.10	42.60	LOW LEVEL ALARM	--

PUMP DATA TABLE

PUMP CHARACTERISTICS	PUMP NO. 1	PUMP NO. 2	PUMP NO. 3
MOTOR DATA			
NOMINAL SIZE (HP)	17	17	17
MAX SPEED (RPM)	3500	3500	3500
SOLIDS PASSAGE			
MIN SPHERE (IN)	4	4	4
CAPACITY (GPM)			
DESIGN	406	406	406
RUNOUT	1,291	1,291	1,291
DISCHARGE HEAD (FT)			
DESIGN	85.9	85.9	85.9
RUNOUT	31.7	31.7	31.7
SHUTOFF	176.5	176.5	176.5
EFFICIENCY (%)			
DESIGN	59.94	59.94	59.94
NPSHR (FT)			
DESIGN	15.6	15.6	15.6
RUNOUT	14.7	14.7	14.7
PUMP CYCLE TIME	6	6	-
CUMULATIVE CAPACITY (GPM)	548	811	-

2' 0' 2' 4' 6'
SCALE: 3/8" = 1'-0"

NO.	DATE	REVISION	APP.

RPS A TETRA TECH COMPANY
Texas PE Firm Reg. #F-929
575 N. Dairy Ashford, Suite 700, Houston, Texas 77079
T +1 281 589 7257
E usinfrastructure@rpsgroup.com

SURVEYED BY: KUCO INC.
FB NO. F-4578

This document is released for the purposes of interim review only under the authority of:

Jeremy Austin, P.E.
Texas P.E. No. 116816
08/21/2026

It is not to be used for bidding, construction, or permitting purposes.

CITY OF HOUSTON
HOUSTON PUBLIC WORKS

RECONSTRUCTION & REHABILITATION
COH LIFT STATIONS

LAKEVILLAGE LS SECTIONS

D-4

WBS NUMBER	FOR CITY OF HOUSTON USE ONLY
R-000267-178A-3	
DRAWING SCALE	
AS NOTED	
CITY OF HOUSTON PM	
TAHA LOTIA	
SHEET NO. 61 OF 147	

PLOTTED: 9/4/2026 12:33:01 PM
PLOT STYLE:
Autodesk Docs://200-317106-24001 COH LS Rehab Design/D-LIFT STATIONS-200-317106-24001_v25.rvt

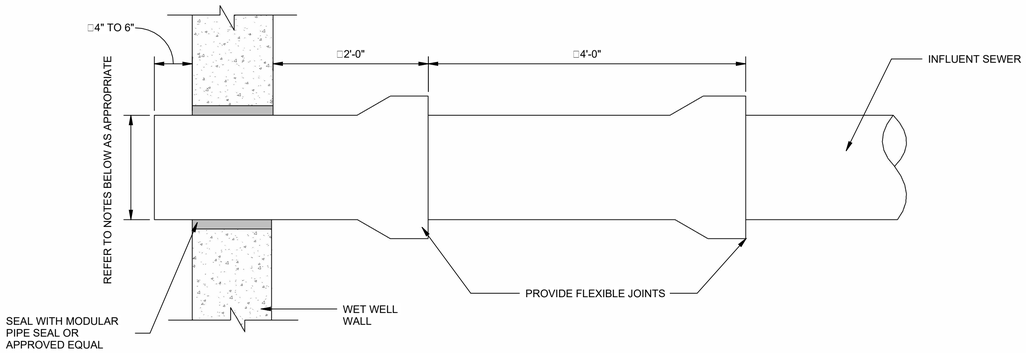

1 TYP INFLUENT SEWER ENTRY DETAIL

NTS

FOR OPENINGS TO BE SLEEVED OR FORMED (CAISSON CONSTRUCTION):
1. IDENTIFY PIPE PENETRATION LOCATION.
2. DIAMETER OF PENETRATION OPENING SHALL BE EQUAL TO PIPE OUTER DIAMETER PLUS 2 TIMES LINK-SEAL THICKNESS. SEE "TYPICAL PIPE BLOCK-OUT DETAIL FOR CAISSON CONSTRUCTION," THIS SHEET.
3. PROVIDE ADDITIONAL REINFORCEMENT AROUND PENETRATION OPENING BEFORE CASTING WALL.

FOR OPENING TO BE FORMED OR SLEEVED (OPEN CUT CONSTRUCTION):
1. IDENTIFY PIPE PENETRATION LOCATION.
2. DIAMETER OF PENETRATION OPENING SHALL BE EQUAL TO PIPE OUTER DIAMETER PLUS 2 TIMES LINK-SEAL THICKNESS.
3. PROVIDE ADDITIONAL REINFORCEMENT AROUND PENETRATION OPENING BEFORE CASTING WALL.

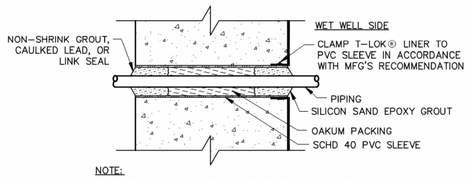

NOTE:
SLEEVED WET WELL PENETRATION IS NOT TO BE USED FOR CONDUIT INSTALLATION. SEE ELECTRICAL DETAIL SHEETS FOR CONDUIT PENETRATIONS.

3 SLEVVED WET WELL PENETRATION FOR PIPING 4" & SMALLER

NTS

NO	DATE	REVISION	APP.

rps A TETRA TECH COMPANY
Texas PE Firm Reg. #F-929
575 N. Dairy Ashford, Suite 700, Houston, Texas 77079
T +1 281 589 7257
E usinfrastructure@rpsgroup.com

SURVEYED BY: KUCO INC.
FB NO. F-4578

This document is released for the purposes of interim review only under the authority of:

Jeremy Austin, P.E.
Texas P.E. No. 116816
08/21/2026

It is not to be used for bidding, construction, or permitting purposes.

CITY OF HOUSTON

HOUSTON PUBLIC WORKS

RECONSTRUCTION & REHABILITATION
COH LIFT STATIONS

PROCESS DETAILS (SHEET 1 OF 5)

STD-D-1

WBS NUMBER	FOR CITY OF HOUSTON USE ONLY
R-000267-178A-3	
DRAWING SCALE	
AS NOTED	
CITY OF HOUSTON PM	
TAHA LOTIA	
SHEET NO. 62 OF 147	

PLOTTED: 8/20/2026 11:56:02 AM
PLOT STYLE:
Autodesk Docs://200-317106-24001 COH LS Rehab Design/D-LIFT STATIONS-200-317106-24001_v25.rvt

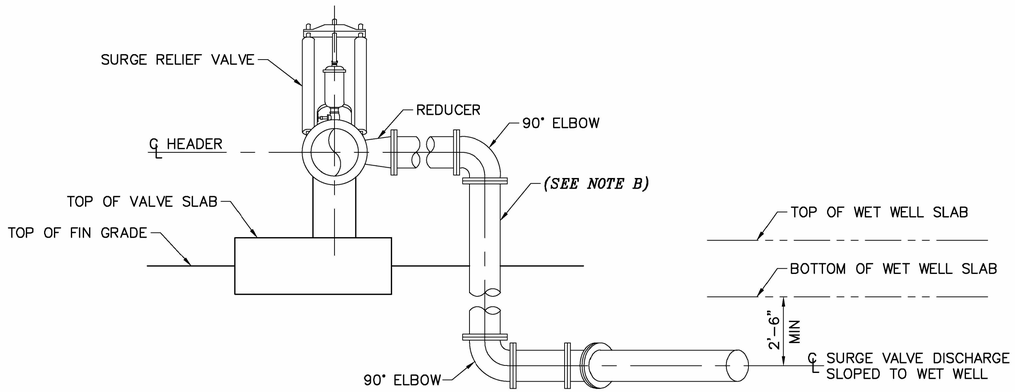

SECTION Y Z0C06

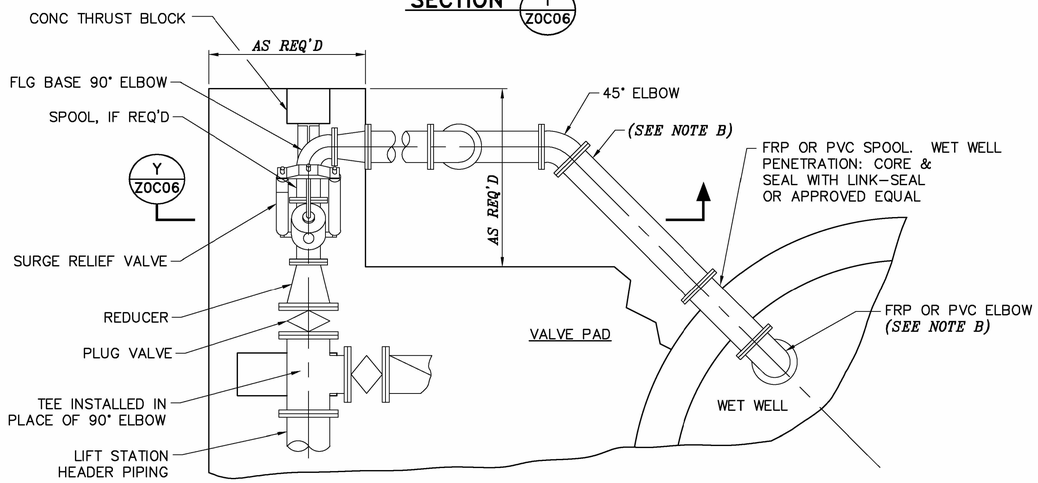

TYP SURGE RELIEF VALVE FOR STATIONS WITHOUT VALVE VAULT

NO	DATE	REVISION	APP.

rps A TETRA TECH COMPANY
Texas PE Firm Reg. #F-929
575 N. Dairy Ashford, Suite 700, Houston, Texas 77079
T +1 281 589 7257
E usinfrastructure@rpsgroup.com

SURVEYED BY: KUCO INC.
FB NO. F-4578

This document is released for the purposes of interim review only under the authority of:

Jeremy Austin, P.E.
Texas P.E. No. 116816
08/21/2026

It is not to be used for bidding, construction, or permitting purposes.

CITY OF HOUSTON
HOUSTON PUBLIC WORKS

RECONSTRUCTION & REHABILITATION
COH LIFT STATIONS

PROCESS DETAILS (SHEET 2 OF 5)

STD-D-2

WBS NUMBER	FOR CITY OF HOUSTON USE ONLY
R-000267-178A-3	
DRAWING SCALE	
AS NOTED	
CITY OF HOUSTON PM	
TAHA LOTIA	
SHEET NO. 63 OF 147	

PLOTTED: 8/20/2026 11:56:06 AM
PLOT STYLE:
Autodesk Docs://200-317106-24001 COH LS Rehab Design/D-LIFT STATIONS-200-317106-24001_v25.rvt

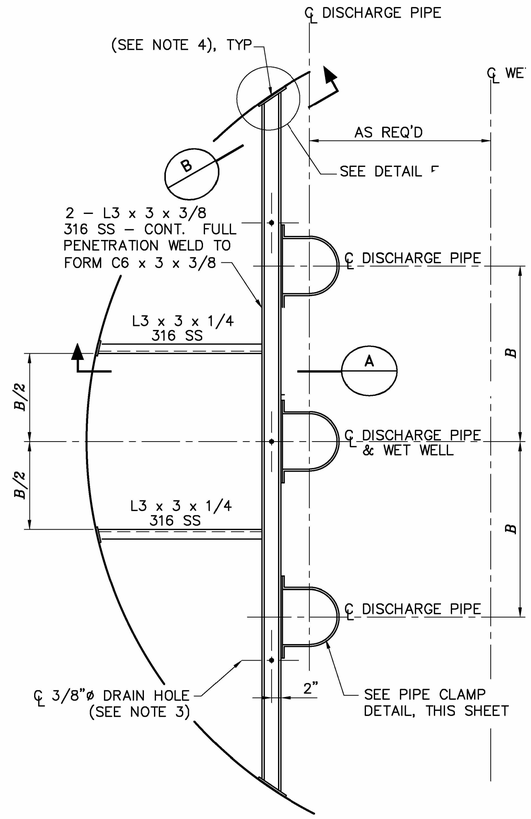

1 TYP DISCHARGE PIPING SUPPORT PLAN FOR 3 PUMPS
NTS

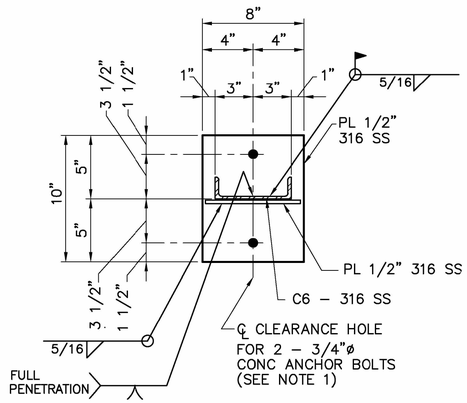

2 SECTION B
NTS

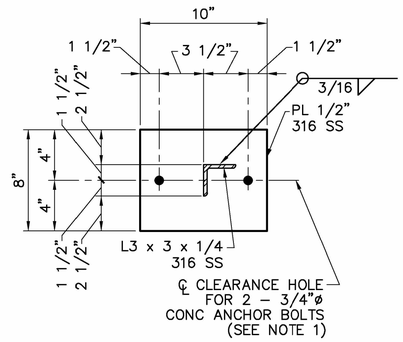

3 SECTION C
NTS

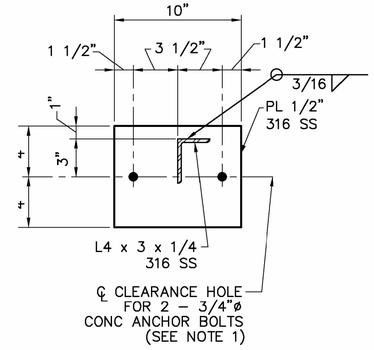

4 SECTION D
NTS

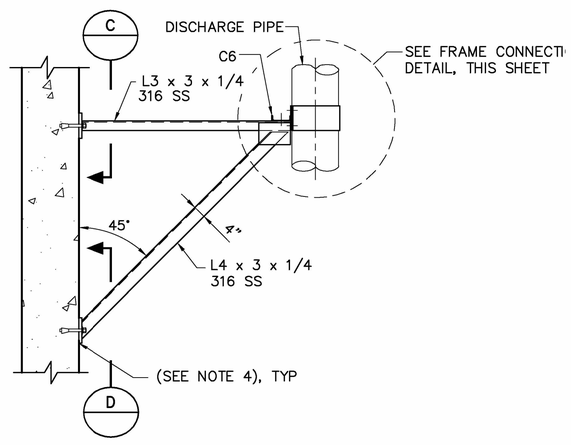

5 TYP LATERAL PIPE SUPPORT FRAME
NTS

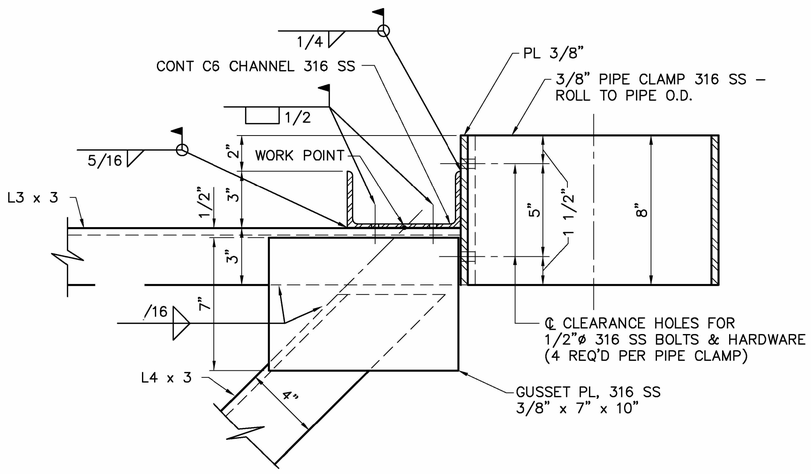

6 FRAME CONNECTION DETAIL
NTS

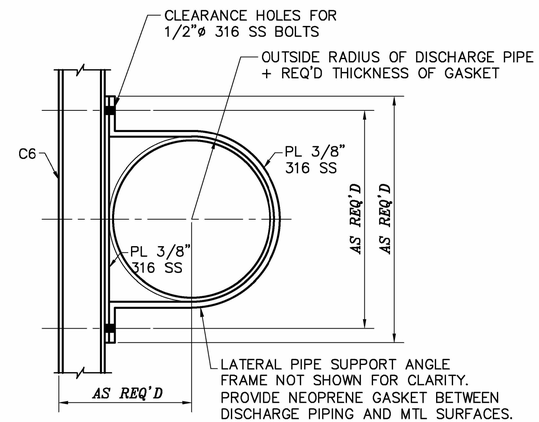

8 PIPE CLAMP DETAIL
NTS

NOTES:

1. CONCRETE ANCHOR BOLTS SHALL HAVE 6" MINIMUM EMBEDMENT AND SHALL BE TYPE 316 STAINLESS STEEL, PER SPECIFICATIONS.
2. SEE STATION AND STRUCTURAL DRAWINGS FOR DIMENSIONS AND INFORMATION NOT SHOWN.
3. DRILL 3/8" ø HOLES 1" OFF C OF C6 AT MIDSPAN BETWEEN LATERAL PIPE SUPPORTS TO ALLOW FOR DRAINAGE. 3 HOLES PER CHANNEL WHERE 2 LATERAL SUPPORTS REQUIRED; 2 HOLES PER CHANNEL WHERE 1 LATERAL SUPPORT REQUIRED.
4. SET 1/4" NOEPRENE GASKET ON WALL SURFACE IN SIKA 1A (OR EQUAL) SEALANT.

NO	DATE	REVISION	APP.

rps
A TETRA TECH COMPANY
Texas PE Firm Reg. #F-929
575 N. Dairy Ashford, Suite 700,
Houston, Texas 77079
T +1 281 589 7257
E usinfrastructure@rpsgroup.com

SURVEYED BY: KUCO INC.
FB NO. F-4578

This document is released for the purposes of interim review only under the authority of:

Jeremy Austin, P.E.
Texas P.E. No. 116816
08/21/2026

It is not to be used for bidding, construction, or permitting purposes.

CITY OF HOUSTON
HOUSTON PUBLIC WORKS

RECONSTRUCTION & REHABILITATION
COH LIFT STATIONS

PROCESS DETAILS (SHEET 3 OF 5)

STD-D-3

WBS NUMBER	FOR CITY OF HOUSTON USE ONLY
R-000267-178A-3	
DRAWING SCALE	
AS NOTED	
CITY OF HOUSTON PM	
TAHA LOTIA	
SHEET NO. 64 OF 147	

PLOTTED: 8/20/2026 11:56:11 AM
PLOT STYLE:
Autodesk Docs://200-317106-24001 COH LS Rehab Design/D-LIFT STATIONS-200-317106-24001_v25.rvt

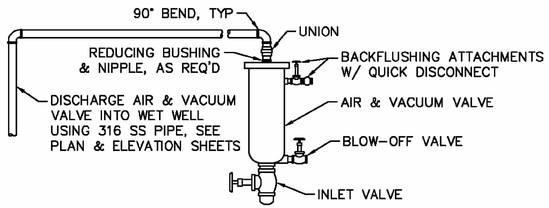

1 TYPICAL AIR & VACUUM VALVE ASSY
NTS

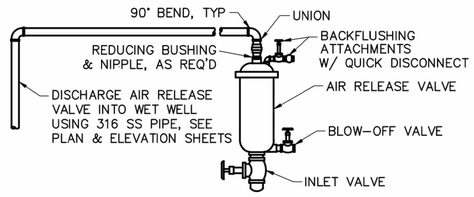

2 TYPICAL AIR RELEASE VALVE
NTS

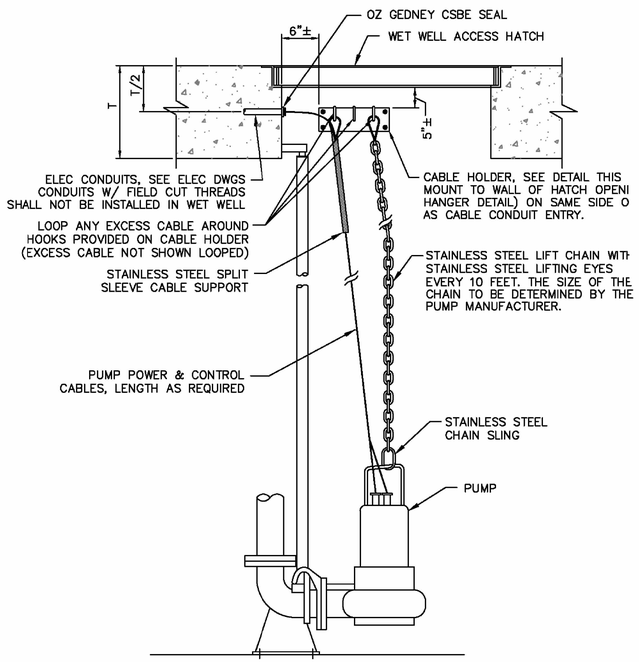

3 TYP PUMP LIFTING & CABLING DETAIL
NTS

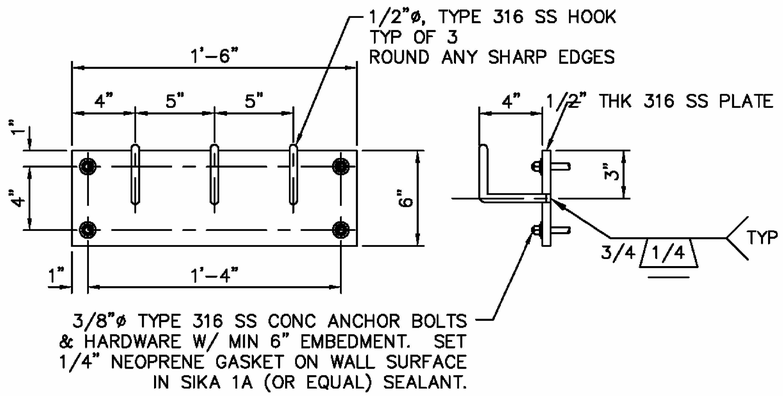

4 TYPICAL CABLE HOLDER ASSY
NTS

NO	DATE	REVISION	APP.

rps
A TETRA TECH COMPANY
Texas PE Firm Reg. #F-929
575 N. Dairy Ashford, Suite 700, Houston, Texas 77079
T +1 281 589 7257
E usinfrastructure@rpsgroup.com

SURVEYED BY: KUCO INC.
FB NO. F-4578

This document is released for the purposes of interim review only under the authority of:

Jeremy Austin, P.E.
Texas P.E. No. 116816
08/21/2026

It is not to be used for bidding, construction, or permitting purposes.

CITY OF HOUSTON
HOUSTON PUBLIC WORKS

RECONSTRUCTION & REHABILITATION
COH LIFT STATIONS

PROCESS DETAILS (SHEET 4 OF 5)

STD-D-4

WBS NUMBER	FOR CITY OF HOUSTON USE ONLY
R-000267-178A-3	
DRAWING SCALE	
AS NOTED	
CITY OF HOUSTON PM	
TAHA LOTIA	
SHEET NO. 65 OF 147	

PLOTTED: 8/20/2026 11:56:16 AM
PLOT STYLE:
Autodesk Docs://200-317106-24001 COH LS Rehab Design/D-LIFT STATIONS-200-317106-24001_v25.rvt

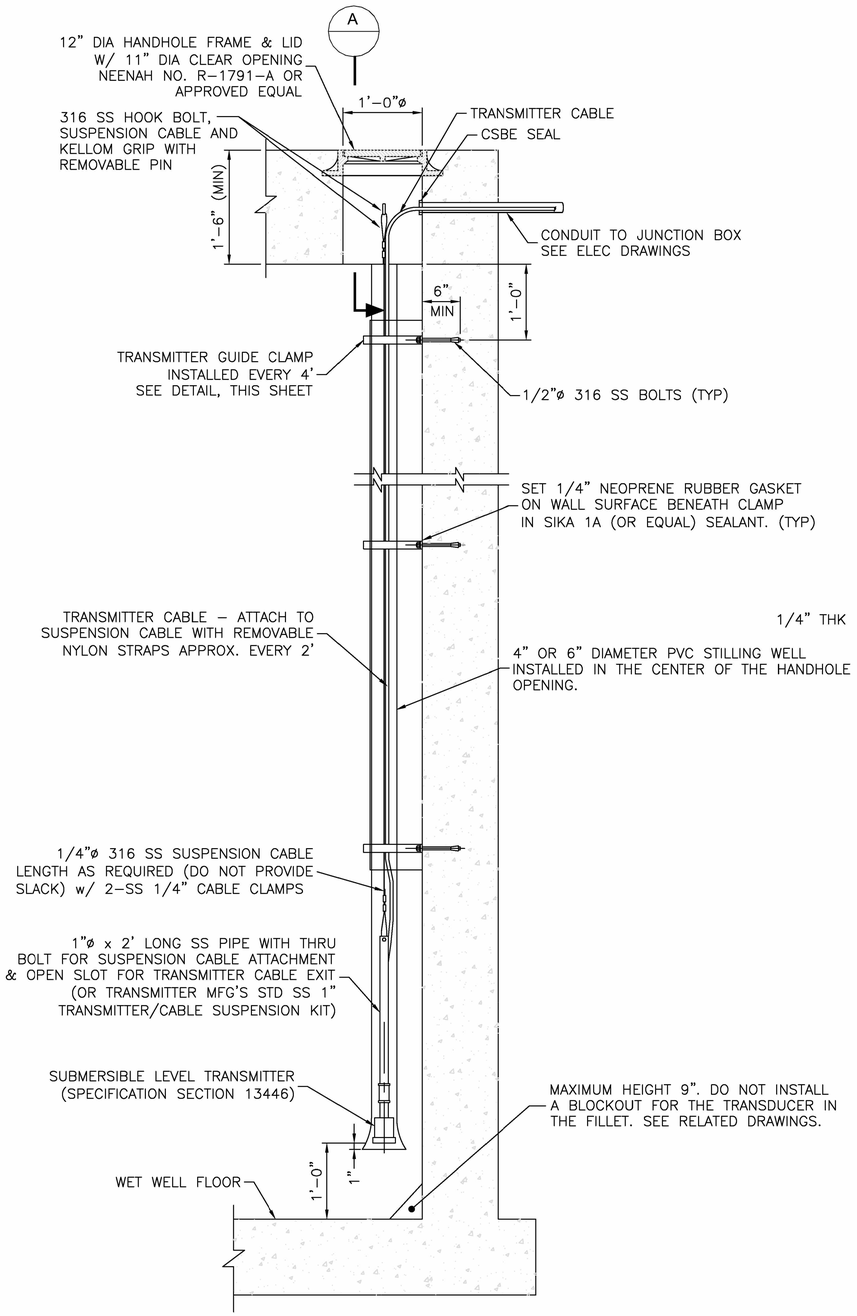

1 SUBMERSIBLE TRANSDUCER WELL LEVEL GAUGING SYSTEM TYP INSTALLATION DETAIL
NTS

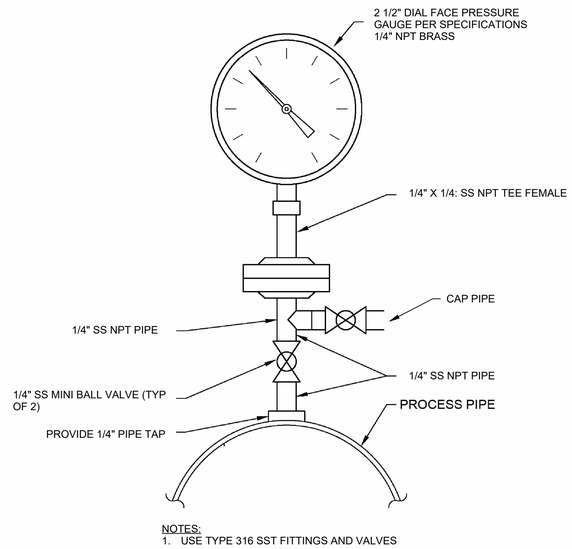

NOTES:
1. USE TYPE 316 SST FITTINGS AND VALVES

2 TYP PRESSURE GAUGE DETAIL
NTS

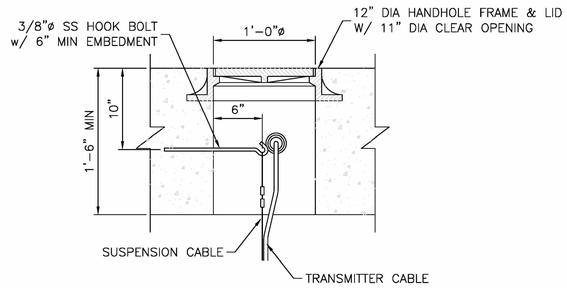

3 SECTION A
NTS

NO	DATE	REVISION	APP.

rps
A TETRA TECH COMPANY
Texas PE Firm Reg. #F-929
575 N. Dairy Ashford, Suite 700, Houston, Texas 77079
T +1 281 589 7257
E usinfrastructure@rpsgroup.com

SURVEYED BY: KUCO INC.
FB NO. F-4578

This document is released for the purposes of interim review only under the authority of:

Jeremy Austin, P.E.
Texas P.E. No. 116816
08/21/2026

It is not to be used for bidding, construction, or permitting purposes.

CITY OF HOUSTON
HOUSTON PUBLIC WORKS

RECONSTRUCTION & REHABILITATION
COH LIFT STATIONS

PROCESS DETAILS (SHEET 5 OF 5)

STD-D-5

WBS NUMBER	FOR CITY OF HOUSTON USE ONLY
R-000267-178A-3	
DRAWING SCALE	
AS NOTED	
CITY OF HOUSTON PM	
TAHA LOTIA	
SHEET NO. 66 OF 147	

PLOTTED: 8/20/2026 11:56:21 AM
PLOT STYLE:
Autodesk Docs://200-317106-24001 COH LS Rehab Design/D-LIFT STATIONS-200-317106-24001_v25.rvt

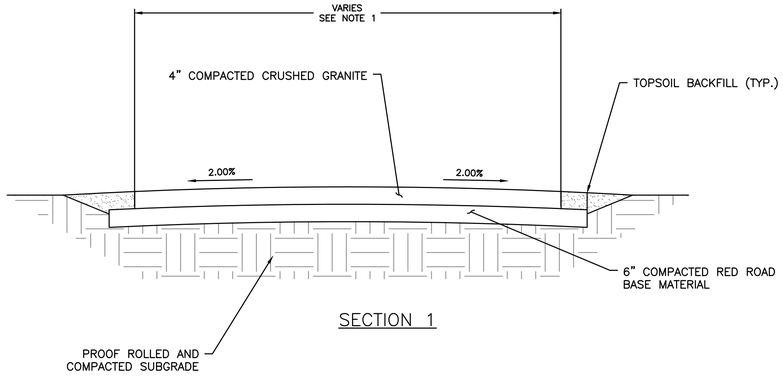

SECTION 1

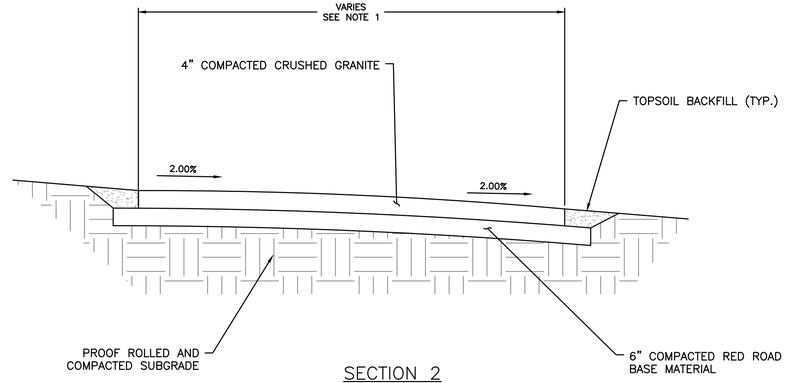

SECTION 2

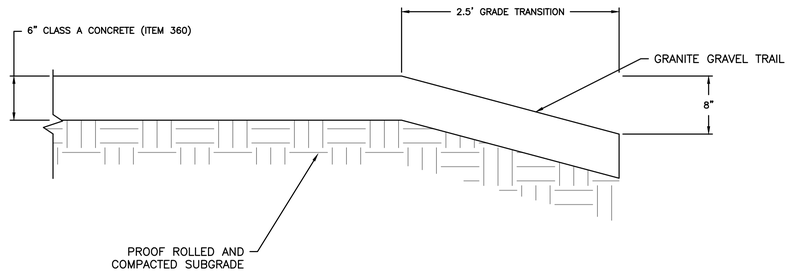

6" CONCRETE TRANSITION

NOTES:

1. ALL WORK SHALL BE PERFORMED IN ACCORDANCE WITH ENGINEERING DRAWINGS.
2. EXISTING TREES, PROPERTY AND PUBLIC RIGHT-OF-WAYS SHALL BE PROTECTED FROM DAMAGE BY TRUCKS AND/OR EQUIPMENT.
3. THE GRANITE GRAVEL WEARING COURSE SHALL BE 4" COMPACTED.
4. THE WEARING MATERIAL SHALL BE COMPRISED OF UNWASHED GRANITE AGGREGATE AND RED CLAY FINES THAT CONFORM TO STANDARD SPECIFICATION ITEM SECTION XX.XX, "MATERIAL."
5. UPON COMPLETION OF TRAIL CONSTRUCTION, ALL GRANITE GRAVEL SHALL BE REMOVED FROM ADJOINING HARD SURFACES (I.E. RETAINING CURB/WALL, SIDEWALKS, RUBBER SAFETY SURFACES, PLAYSCAPE DECKS OR RAMPS).
6. ALL ADJACENT HARD SURFACES, SUCH AS CURBS OR WALKS, SHALL BE INSTALLED PRIOR TO INSTALLATION OF GRANITE GRAVEL.

RPS
A TETRA TECH COMPANY
Texas PE Firm Reg. #F-929
575 N. Dairy Ashford, Suite 700,
Houston, Texas 77079
T +1 281 589 7257
E usinfrastructure@rpsgroup.com

SURVEYED BY: KUO Inc.
FB NO. F-4578

This document is released for the purposes of interim review only under the authority of:

Neha Raval, P.E.
Texas P.E. No. 141506
09/11/2026

It is not to be used for bidding, construction, or permitting purposes.

CITY OF HOUSTON

HOUSTON PUBLIC WORKS

LIFT STATION REHABILITATION & RECONSTRUCTION

BIKE LANE DETAILS
STD-C-1

WBS NUMBER	FOR CITY OF HOUSTON USE ONLY
R-000267-178A-3	
DRAWING SCALE	
AS NOTED	
CITY OF HOUSTON PM	
TAHA LOTIA	
SHEET NO. 67 OF 147	

FILE PATH: C:\Users\andres.martinezjr\DC\ACCDocs\Tetra Tech Inc\200-317106-24001 COH LS Rehab Design\Project Files\CAD\R-000267-178A-3-STD-C-1.dwg PLOTTED: 9/9/2026 4:58 PM

CEDAR FENCE

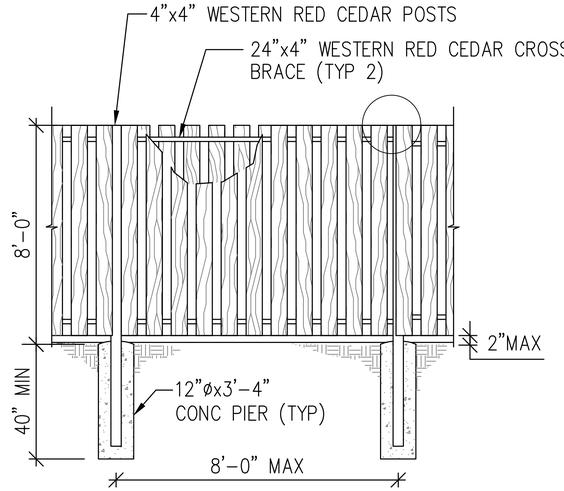

ELEVATION

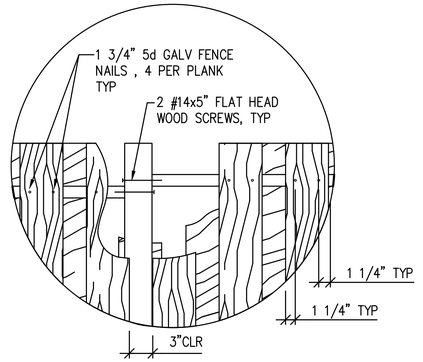

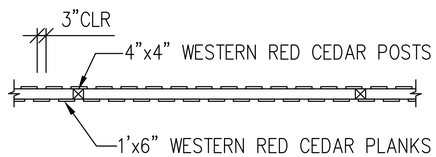

PLAN

MATCH EXST SOLID SLAT ONE SIDE

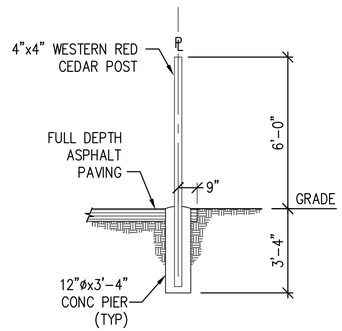

RPS A TETRA TECH COMPANY
Texas PE Firm Reg. #F-929
575 N. Dairy Ashford, Suite 700, Houston, Texas 77079
T +1 281 589 7257
E usinfrastructure@rpsgroup.com

SURVEYED BY: KUO Inc.
FB NO. F-4578

This document is released for the purposes of interim review only under the authority of:

Neha Raval, P.E.
Texas P.E. No. 141506
09/11/2026

It is not to be used for bidding, construction, or permitting purposes.

CITY OF HOUSTON
HOUSTON PUBLIC WORKS

LIFT STATION REHABILITATION & RECONSTRUCTION

FENCE DETAILS
STD-C-2

WBS NUMBER	FOR CITY OF HOUSTON USE ONLY
R-000267-178A-3	
DRAWING SCALE	
AS NOTED	
CITY OF HOUSTON PM	
TAHA LOTIA	
SHEET NO. 68 OF 147	

FILE PATH: C:\Users\andres.martinezjr\DC\ACCDocs\Tetra Tech Inc\200-317106-24001 COH LS Rehab Design\Project Files\CAD\R-000267-178A-3_STD_Fence Details.dwg PLOTTED: 9/9/2026 4:58 PM

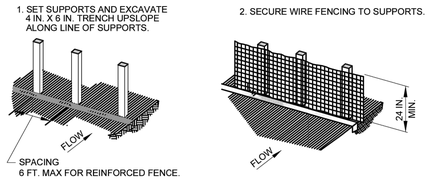

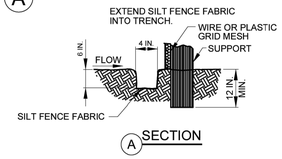

NOTE:

1. SEE SPECIFICATION SECTION NO. 02361-SILT FENCES.

RSF SYMBOL — REINFORCED SILT FENCE

REINFORCED SILT FENCE

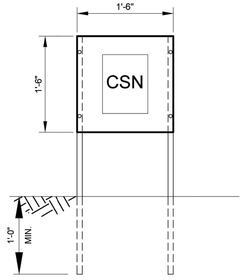

NOTE:
CONSTRUCT IN ACCORDANCE WITH HCFCD SPECIFICATION SECTION 01580 - PROJECT SIGNS.

CSN HOLDER

SWPPP / BMP SIGN AND CONSTRUCTION SITE NOTICE HOLDER DETAILS

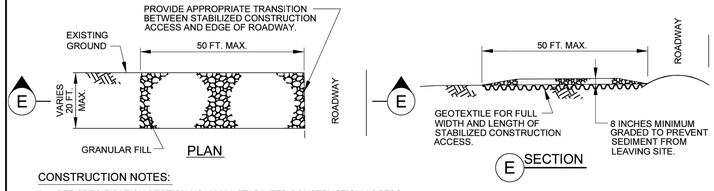

CONSTRUCTION NOTES:

1. SEE SPECIFICATION SECTION NO. 02365-STABILIZED CONSTRUCTION ACCESS.

STABILIZED CONSTRUCTION ACCESS

SCA SYMBOL

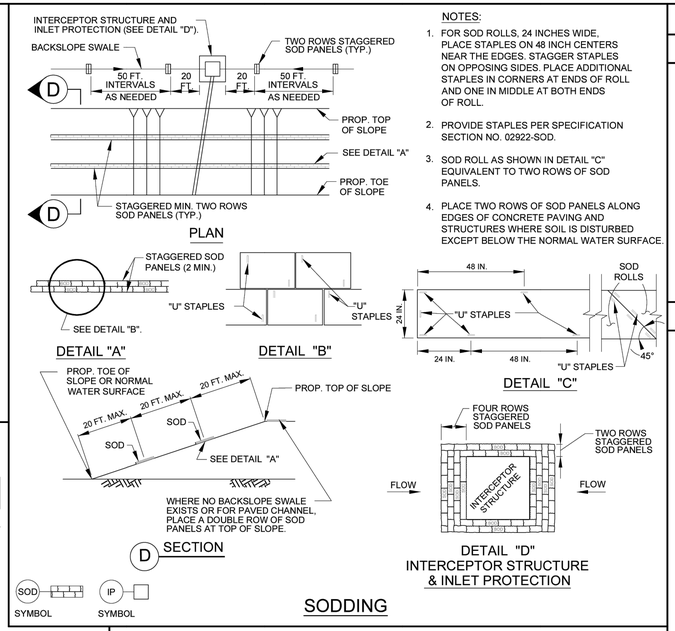

NOTES:

1. FOR SOD ROLLS, 24 INCHES WIDE, PLACE STAPLES ON 48 INCH CENTERS NEAR THE EDGES. STAGGER STAPLES ON OPPOSING SIDES. PLACE ADDITIONAL STAPLES IN CORNERS AT ENDS OF ROLL AND ONE IN MIDDLE AT BOTH ENDS OF ROLL.
2. PROVIDE STAPLES PER SPECIFICATION SECTION NO. 02922-SOD.
3. SOD ROLL AS SHOWN IN DETAIL "C" EQUIVALENT TO TWO ROWS OF SOD PANELS.
4. PLACE TWO ROWS OF SOD PANELS ALONG EDGES OF CONCRETE PAVING AND STRUCTURES WHERE SOIL IS DISTURBED EXCEPT BELOW THE NORMAL WATER SURFACE.

SOD SYMBOL — IP SYMBOL

SODDING

FILTER DAM NOTES:

A. TYPES OF FILTER DAMS
   1. TYPE 1 - NOT USED BY HCFCD
   2. TYPE 2 (REINFORCED).
      a. HEIGHT - 18-36 INCHES. MEASURE VERTICALLY FROM EXISTING GROUND TO TOP OF FILTER DAM.
      b. TOP WIDTH - 2 FEET (MINIMUM).
      c. SLOPES - 2:1 (MAXIMUM).
   3. TYPE 3 - NOT USED BY HCFCD
   4. TYPE 4 (GABION)
      a. HEIGHT - 30 INCHES (MINIMUM). MEASURE VERTICALLY FROM EXISTING GROUND TO TOP OF FILTER DAM.
      b. TOP WIDTH - 2 FEET (MINIMUM).
   5. TYPE 5. AS SHOWN ON THE PLANS.

B. CONSTRUCT FILTER DAMS ACCORDING TO THE FOLLOWING CRITERIA UNLESS SHOWN OTHERWISE ON THE PLANS.
   1. TYPE 2 AND 3 FILTER DAMS: SECURE WITH 20 GAUGE GALVANIZED WOVEN WIRE MESH WITH 1 INCH DIAMETER HEXAGONAL OPENINGS.
   2. GRANULAR FILL:
      a. PLACE ON MESH TO HEIGHT AND SLOPES SHOWN ON PLANS OR AS SPECIFIED BY THE ENGINEER.
      b. 3-5 INCHES FOR ROCK FILTER DAM TYPES 2, AND 4. REFER TO GRANULAR FILL IN SPECIFICATION SECTION NO. 02378-RIPRAP AND GRANULAR FILL.
   3. WIRE MESH: FOLD AT UPSTREAM SIDE OVER GRANULAR FILL AND TIGHTLY SECURE TO ITSELF ON THE DOWNSTREAM SIDE USING WIRE TIES OR HOG RINGS.
   4. IN STREAMS, SECURE OR STAKE MESH TO STREAM BED PRIOR TO AGGREGATE PLACEMENT.
   5. SEE SPECIFICATION SECTION NO. 02364-FILTER DAMS.
   6. EMBED ONE FOOT MINIMUM INTO SLOPE AND AT SLOPE RAISE ONE FOOT HIGHER THAN CENTER OF DEPRESSED AREA.

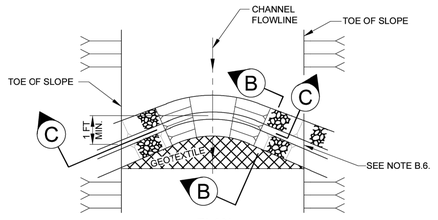

IN-CHANNEL FILTER DAM

GEOTEXTILE NOTES:

MIN. AOS	SIEVE NO.	120 MIN
MAX. AOS	SIEVE NO.	50 MAX
WEIGHT	OZ/SY	4 OZ. MIN

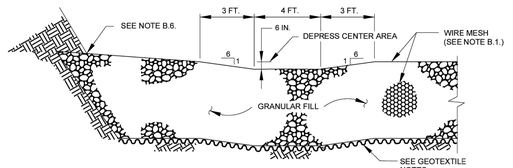

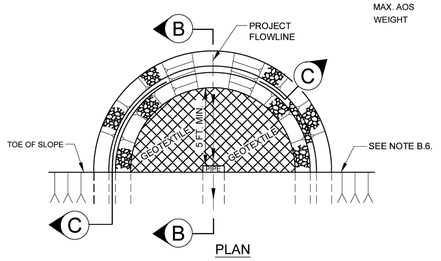

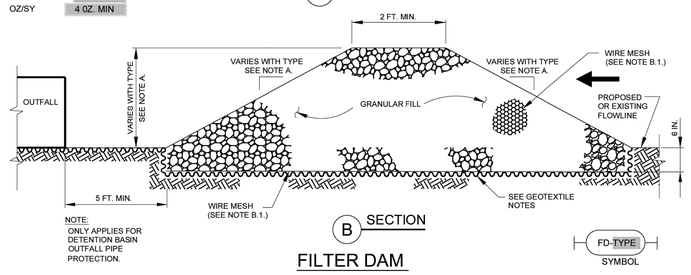

NOTE:
ONLY APPLIES FOR DETENTION BASIN OUTFALL PIPE PROTECTION.

FILTER DAM AT DETENTION BASIN OUTFALL PIPE

FILTER DAM

FD-TYPE SYMBOL

THIS DETAIL SHEET HAS BEEN PREPARED FOR USE ON HCFCD PROJECTS OR PROJECTS TO BE MAINTAINED BY THE HCFCD WHEN COMPLETED BY OTHERS. AN ENGINEER WHO INCORPORATES THE DETAILS ON THIS SHEET BECOMES RESPONSIBLE FOR ITS USE IN THE END PRODUCT IN ACCORDANCE WITH RULE 137.33 (b) AND (c) OF THE TEXAS BOARD OF PROFESSIONAL ENGINEERS.

P.E. SEAL AND SIGNATURE

ENGINEER - CONFIRM, CHANGE, OR FILL IN.

REV	DESCRIPTION	DATE	APPR

PROJECT ID#

PROJECT TITLE

STORMWATER POLLUTION PREVENTION DETAILS

PREPARED:

CHECKED:

APPROVED:

COMPANY INFORMATION AND LOGO GOES HERE

HARRIS COUNTY FLOOD CONTROL DISTRICT
9900 Northwest Freeway
Houston, Texas 77092

DATE: 10-23-2018
SCALE: NTS

SHEET NUMBER
OF

RPS A TETRA TECH COMPANY
Texas PE Firm Reg. #F-929
575 N. Dairy Ashford, Suite 700, Houston, Texas 77079
T +1 281 589 7257
E usinfrastructure@rpsgroup.com

SURVEYED BY: KUO Inc.
FB NO. F-4578

This document is released for the purposes of interim review only under the authority of:

Neha Raval, P.E.
Texas P.E. No. 141506
09/11/2026

It is not to be used for bidding, construction, or permitting purposes.

CITY OF HOUSTON
HOUSTON PUBLIC WORKS

LIFT STATION REHABILITATION & RECONSTRUCTION

STORM WATER POLLUTION PREVENTION PLAN DETAILS
STD-C-3

WBS NUMBER	FOR CITY OF HOUSTON USE ONLY
R-000267-178A-3	
DRAWING SCALE	
AS NOTED	
CITY OF HOUSTON PM	
TAHA LOTIA	
SHEET NO. 69 OF 147	

FILE PATH: C:\Users\andres.martinezjr\DC\ACCDocs\Tetra Tech Inc\200-317106-24001 COH LS Rehab Design\Project Files\CAD\R-000267-178A-3_POLLUPREVENTDETAILS.dwg

S:\Operation\PROJECTS\2000 Standard Detail Sheets\STORMWATER POPULATION PREVENTION DETAILS\Stormwater Pollution Prevention Details.dwg

DISCLAIMER:
THE USE OF THIS STANDARD IS GOVERNED BY THE TEXAS ENGINEERING PRACTICE ACT. THE DESIGN REQUIREMENTS ON THIS STANDARD DO NOT PURPORT TO ADDRESS ALL OF THE SAFETY CONCERNS ASSOCIATED WITH THEIR USE. THE ENGINEER OF RECORD (EOR) IS TO REVIEW THESE DESIGN REQUIREMENTS AND BY AUTHORIZING THEIR USE; ACCEPTS RESPONSIBILITY FOR THEIR APPLICABILITY, ADEQUACY AND SAFETY; NO WARRANTY OF ANY KIND IS MADE BY THE CITY OF HOUSTON FOR ANY PURPOSES WHATSOEVER. THE CITY OF HOUSTON ASSUMES NO RESPONSIBILITY FOR INCORRECT RESULTS OR DAMAGES RESULTING FROM ITS USE.

1. SET POSTS AND EXCAVATE 4"x4" TRENCH UPSLOPE ALONG LINE OF POSTS (SEE NOTE 1).

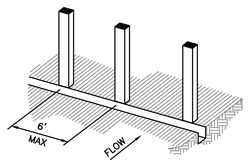

2. SECURE WIRE REINFORCING TO POSTS (SEE NOTE 2).

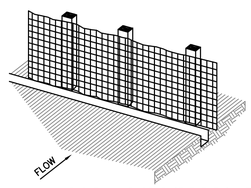

3. ATTACH FILTER MATERIAL TO WIRE REINFORCING AND EXTEND IT INTO THE TRENCH (SEE NOTE 3).

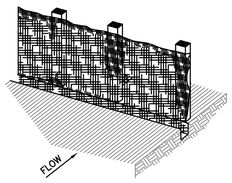

4. BACKFILL AND COMPACT THE EXCAVATED SOIL.

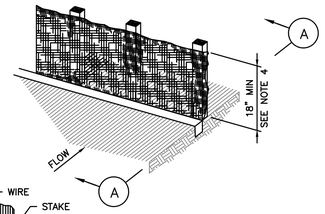

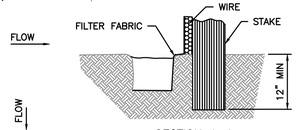

SECTION A–A
EXTENSION OF FABRIC INTO TRENCH

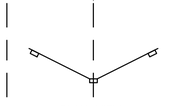

PLAN VIEW

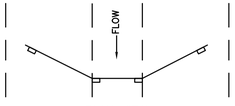

PLAN VIEW

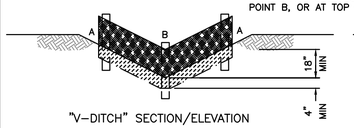

"V–DITCH" SECTION/ELEVATION

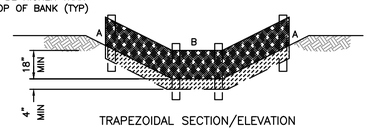

TRAPEZOIDAL SECTION/ELEVATION

CONSTRUCTION NOTES:

1. SET 2 INCH BY 2 INCH WOODEN STAKES SPACED A MAX OF 6 FEET APART AND EMBEDDED A MIN OF 12 INCHES.
2. WOVEN WIRE REINFORCING TO BE FASTENED SECURELY TO BARRIER POSTS WITH STAPLES.
3. FILTER CLOTH TO BE FASTENED SECURELY TO WOVEN WIRE REINFORCING, WITH TIES SPACED EVERY 24 INCHES AT TOP AND MIDSECTION.
4. MINIMUM HEIGHT OF FILTER SHOULD BE 18 INCHES AND A MAXIMUM OF 36 INCHES ABOVE NATURAL GROUND.
5. WHEN TWO SECTIONS OF FILTER CLOTH ADJOIN EACH OTHER THEY SHALL BE OVERLAPPED 6 INCHES AT THE POSTS, AND FOLDED.
6. SEE COH STANDARD SPECIFICATION 01570 FOR FILTER FABRIC BARRIER.

SYMBOL

REINFORCED FILTER FABRIC BARRIER

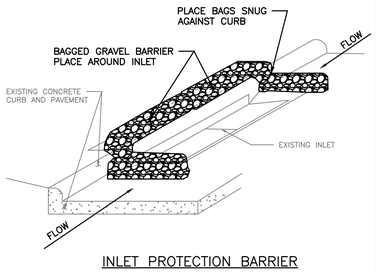

INLET PROTECTION BARRIER
(FOR STAGE II INLETS)
BAGGED GRAVEL BARRIER

1. SET POSTS AT REQUIRED SPACING.

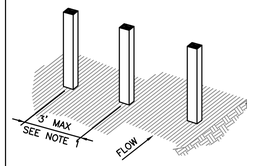

2. EXCAVATE A 4"x4" TRENCH UPSLOPE ALONG THE LINE OF STAKES.

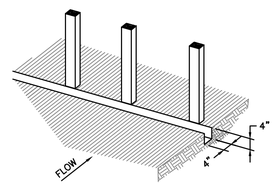

3. ATTACH FILTER MATERIAL TO STAKES AND EXTEND IT INTO THE TRENCH.

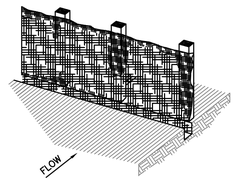

4. BACKFILL AND COMPACT THE EXCAVATED SOIL.

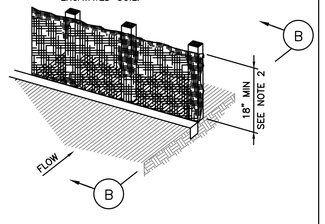

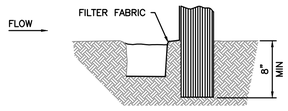

SECTION B–B
EXTENSION OF FABRIC INTO TRENCH

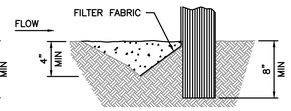

SECTION B–B
ALTERNATE
V–TRENCH EXTENSION OF FABRIC INTO TRENCH

CONSTRUCTION NOTES:

1. 2 INCH THICK BY 2 INCH WOODEN STAKES TO BE SET AT MAX SPACING OF 3 FEET AND EMBEDDED A MIN OF 8 INCHES. IF PREASSEMBLED BARRIER WITH SUPPORT NETTING IS USED, SPACING OF POST MAY BE INCREASED TO 8 FEET MAX.
2. ATTACH FILTER FABRIC TO WOODEN STAKES. FILTER FABRIC BARRIER SHALL HAVE A MIN HEIGHT OF 18 INCHES AND MAX HEIGHT OF 36 INCHES ABOVE NATURAL GROUND.
3. WHEN TWO SECTIONS OF FILTER CLOTH ADJOIN EACH OTHER THEY SHOULD BE OVERLAPPED 6 INCHES AT THE POSTS, AND FOLDED.
4. SEE COH STANDARD SPECIFICATION 01570 FOR FILTER FABRIC BARRIER.

SYMBOL

FILTER FABRIC BARRIER

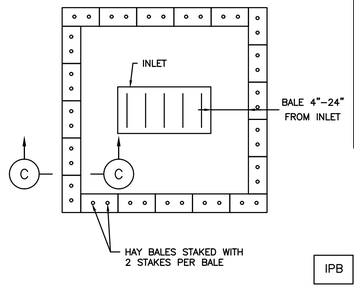

PLAN VIEW

SYMBOL

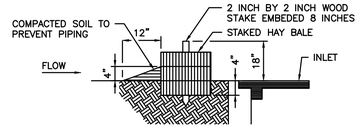

SECTION C–C

HAY BALE INLET PROTECTION BARRIER

CONSTRUCTION NOTES:

1. SEE CONSTRUCTION NOTES FOR RFB.

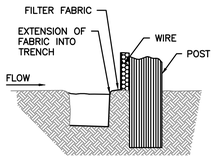

SECTION D–D

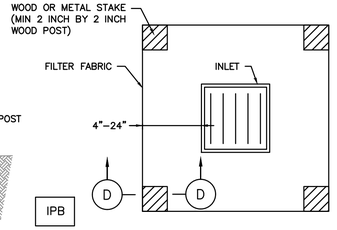

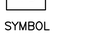

SYMBOL

PLAN VIEW

SILT FENCE INLET PROTECTION BARRIER

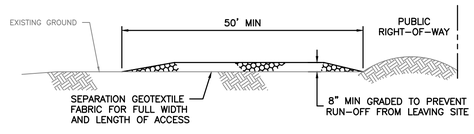

PROFILE

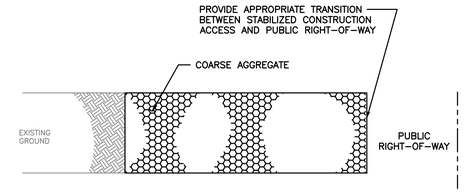

PLAN VIEW

CONSTRUCTION NOTES:

1. LENGTH SHALL BE AS SHOWN ON THE CONSTRUCTION DRAWINGS, BUT NOT LESS THAN 50 FEET.
2. THICKNESS SHALL BE NOT LESS THAN 8 INCHES.
3. WIDTH SHALL BE NOT LESS THAN FULL WIDTH OF ALL POINTS OF INGRESS OR EGRESS.
4. STABILIZATION FOR OTHER AREAS SHALL HAVE THE SAME AGGREGATE THICKNESS AND WIDTH REQUIREMENTS AS THE STABILIZED CONSTRUCTION ACCESS, UNLESS OTHERWISE SHOWN ON THE CONSTRUCTION DRAWINGS.
5. STABILIZED AREA MAY BE WIDENED OR LENGTHENED TO ACCOMODATE A WASHING AREA. AN OUTLET SEDIMENT TRAP MUST BE PROVIDED FOR THE WASHING AREA.
6. COH STANDARD SPECIFICATION 01575 FOR STABILIZED CONSTRUCTION ACCESS.
7. STABILIZED CONSTRUCTION ACCESS SHALL BE MAINTAINED FREE OF SEDIMENT FOR THE DURATION OF THE PROJECT.

SYMBOL

STABILIZED CONSTRUCTION ACCESS

APPROVED BY:	APPROVED BY:
Signed by: THE SIGNATURE OF RACHEL...	Signed by: ... DIRECTOR OF HOUSTON PUBLIC WORKS
CITY ENGINEER	DIRECTOR OF HOUSTON PUBLIC WORKS
EFF DATE: MAR–02–2026	DWG NO: 01570–01

CITY OF HOUSTON
HOUSTON PUBLIC WORKS STANDARD

STORMWATER POLLUTION PREVENTION PLAN DETAILS

	FOR CITY OF HOUSTON USE ONLY
DRAWING SCALE	
NOT TO SCALE	

RPS
A TETRA TECH COMPANY
Texas PE Firm Reg. #F-929
575 N. Dairy Ashford, Suite 700,
Houston, Texas 77079
T +1 281 589 7257
E usinfrastructure@rpsgroup.com

SURVEYED BY: KUO Inc.
FB NO. F–4578

This document is released for the purposes of interim review only under the authority of:

Neha Raval, P.E.
Texas P.E. No. 141506
09/11/2026

It is not to be used for bidding, construction, or permitting purposes.

CITY OF HOUSTON
HOUSTON PUBLIC WORKS

LIFT STATION REHABILITATION & RECONSTRUCTION

SWPPP DETAILS
STD–C–4

WBS NUMBER	FOR CITY OF HOUSTON USE ONLY
R–000267–178A–3	
DRAWING SCALE	
AS NOTED	
CITY OF HOUSTON PM	
TAHA LOTIA	
SHEET NO. 70 OF 147	

FILE PATH: C:\Users\andres.martinezjr\DC\ACCDocs\Tetra Tech Inc\200–317106–24001 COH LS Rehab Design\Project Files\CAD\R–000267–CP1DETAILS.dwg

02632-01

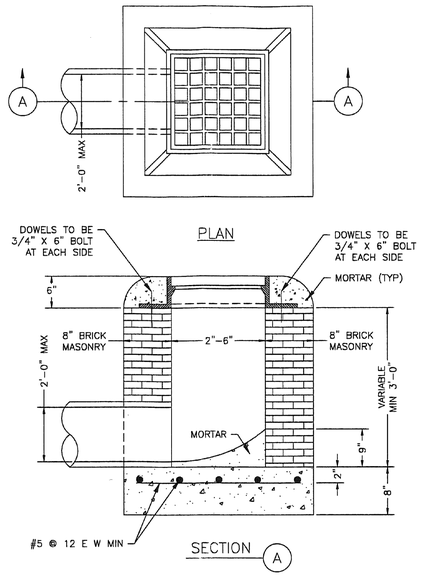

STORM SEWER TYPE "A" GRATE INLET
NTS

COH IS PHASING OUT BRICK. NEW DETAILS TO BE POSTED END OF 2019

02632-03

STEP 1: EXIST TYPE "B" INLET

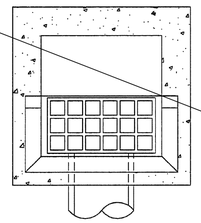

TOP VIEW

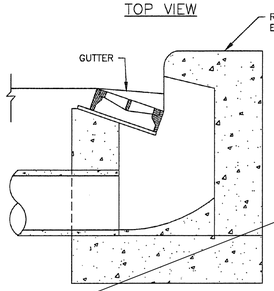

SIDE VIEW

STEP 2:

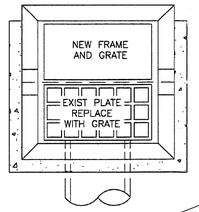

TOP VIEW

NOTES:

1. AFTER REMOVING EXIST CURB, RAISE EXIST FRAME TO GUTTER GRADE.
2. REPLACE EXIST PLATE WITH A GRATE.
3. ADD NEW FRAME AND GRATE NEXT TO EXIST FRAME.
4. BACKFILL INLET TO A POINT ONE FOOT BEHIND THE CURB WITH 1 SACK/TON CEMENT STABILIZED SAND.

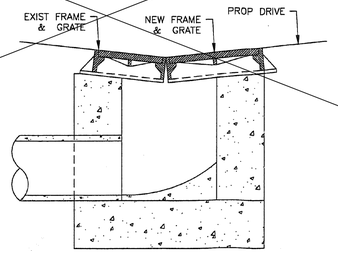

SIDE VIEW

STEP 3: CONSTRUCT NEW TYPE "B-B" INLET ON CURB RETURN OF PROPOSED DRIVEWAY

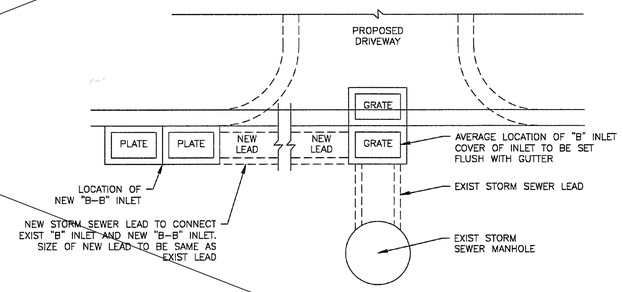

STORM SEWER TYPE "B" INLET RELOCATION
NTS

FIRM INFORMATION | ENGINEER'S SEAL

CITY OF HOUSTON
HOUSTON PUBLIC WORKS

STORM SEWER
02632-01 AND 03

APPROVED BY: CITY ENGINEER | APPROVED BY: DEPUTY DIRECTOR

APPROVED BY: DIRECTOR OF PUBLIC WORKS AND ENGINEERING

EFFECTIVE DATE: JUL-01-2019

FOR CITY OF HOUSTON USE ONLY

SHEET NO. XX OF XX

RPS A TETRA TECH COMPANY
Texas PE Firm Reg. #F-929
575 N. Dairy Ashford, Suite 700, Houston, Texas 77079
T +1 281 589 7257
E usinfrastructure@rpsgroup.com

SURVEYED BY: KUO Inc.
FB NO. F-4578

This document is released for the purposes of interim review only under the authority of:

Neha Raval, P.E.
Texas P.E. No. 141506
09/11/2026

It is not to be used for bidding, construction, or permitting purposes.

CITY OF HOUSTON
HOUSTON PUBLIC WORKS

LIFT STATION REHABILITATION & RECONSTRUCTION

STORM SEWER DETAILS
STD-C-5

WBS NUMBER	FOR CITY OF HOUSTON USE ONLY
R-000267-178A-3	
DRAWING SCALE	
AS NOTED	
CITY OF HOUSTON PM	
TAHA LOTIA	
SHEET NO. 71 OF 147	

FILE PATH: C:\Users\andres.martinezjr\DC\ACCDocs\Tetra Tech Inc\200-317106-24001 COH LS Rehab Design\Project Files\CAD\R-000267-01DGN-STD-C-5 SEWER DETAILS.DWG DATE: 9/9/2026 4:59 PM

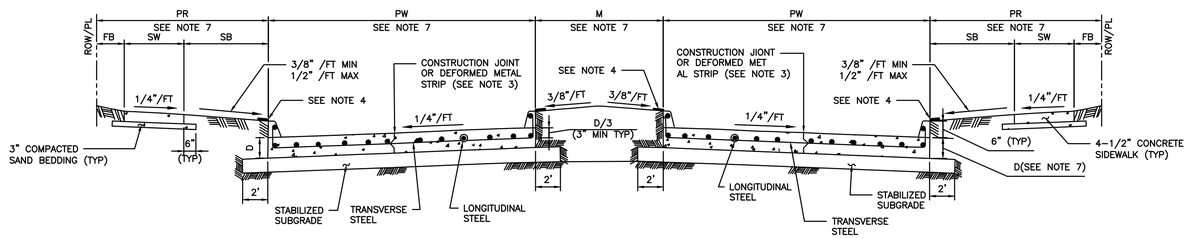

TYPICAL DOUBLE ROADWAY SECTION FOR CONCRETE PAVEMENT WITH CURBS

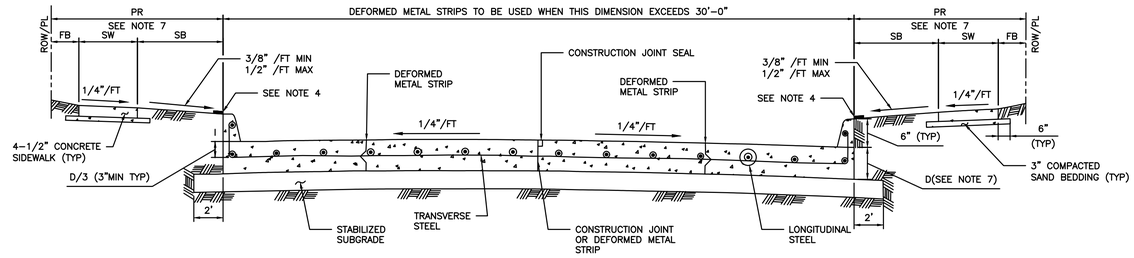

TYPICAL SINGLE ROADWAY SECTION FOR CONCRETE PAVEMENT WITH CURBS

TABLE 1

REINFORCING STEEL BAR SIZES AND SPACINGS FOR VARIOUS PAVEMENT THICKNESSES (D) WITH: MAXIMUM TRANSVERSE CONTROL JOINT SPACING = 20'–0"
MAXIMUM EXPANSION JOINT SPACING = 80'–0"
fc' = 4,000 PSI/28 DAYS AND FY = 60,000 PSI

PAVEMENT THICKNESS "D" (IN)	PAVEMENT WIDTH "PW" (FT)	LONGITUDINAL STEEL									TRAVERSE STEEL		
		#4 BARS			#5 BARS			#6 BARS			#4 BARS	#5 BARS	#6 BARS
		NUMBER OF BARS	SPACING (IN)	END BAR SPACING (IN)	NUMBER OF BARS	SPACING (IN)	END BAR SPACING (IN)	NUMBER OF BARS	SPACING (IN)	END BAR SPACING (IN)	SPACING (IN)	SPACING (IN)	SPACING (IN)
6	28	17	20.50	4.00	–	–	–	–	–	–	36	–	–
7	25	17	18.25	4.00	–	–	–	–	–	–	36	–	–
7	35	24	18.00	3.00	–	–	–	–	–	–	36	–	–
7	36	25	17.75	3.00	–	–	–	–	–	–	36	–	–
7	37	25	18.25	3.00	–	–	–	–	–	–	36	–	–
7	41	28	18.00	3.00	–	–	–	–	–	–	36	–	–
7	45	31	17.75	3.75	–	–	–	–	–	–	36	–	–
8	25	20	15.50	2.75	13	24.50	3.0	–	–	–	36	36	–
8	34	27	15.50	2.50	17	25.00	4.0	–	–	–	36	36	–
8	35	27	16.00	2.00	18	24.25	4.0	–	–	–	36	36	–
8	36	28	15.75	3.25	18	25.00	3.0	–	–	–	30	36	–
8	44	24	15.75	4.00	22	24.75	4.0	–	–	–	30	36	–
8	45	35	15.75	2.25	23	24.25	3.0	–	–	–	30	36	–
9	25	22	14.00	3.00	14	22.50	4.0	–	–	–	36	36	–
9	34	31	13.50	2.00	19	22.25	3.5	–	–	–	30	36	–
9	35	31	13.75	3.75	20	21.75	3.5	–	–	–	30	36	–
9	36	32	13.75	3.00	21	21.25	3.5	–	–	–	30	36	–
9	44	39	13.75	2.75	25	21.75	3.0	–	–	–	24	36	–
9	45	39	14.00	4.00	26	21.25	4.5	–	–	–	24	36	–
10	25	24	12.75	3.50	17	18.25	4.0	–	–	–	36	36	36
10	34	33	12.50	4.00	21	20.00	4.0	–	–	–	30	36	36
10	35	34	12.50	3.75	23	18.75	4.0	–	–	–	30	36	36
10	36	35	12.50	3.50	24	18.50	3.0	–	–	–	30	36	36
10	44	44	12.00	4.00	29	18.50	4.5	–	–	–	24	36	36
10	45	44	12.50	3.00	29	19.00	3.0	–	–	–	24	36	36
11	25	27	11.25	3.00	17	18.25	4.0	12	26.75	3	36	36	36
11	34	36	11.50	2.75	24	17.50	2.5	17	25.00	4	24	36	36
11	35	37	11.50	3.00	24	18.00	3.0	17	25.75	4	24	36	36
11	36	40	11.00	2.00	25	17.75	3.0	17	26.50	4	24	36	36
11	44	48	11.125	2.50	30	18.00	3.0	21	26.00	4	24	36	36
11	45	49	11.125	3.00	31	17.75	4.0	22	25.50	3	24	36	36
12	25	–	–	–	19	16.25	4.0	13	24.50	3	36	36	36
12	34	–	–	–	26	16.00	4.0	18	23.50	4	24	36	36
12	35	–	–	–	26	16.50	4.0	19	23.00	3	24	36	36
12	36	–	–	–	27	16.25	4.5	20	22.25	4.5	24	36	36
12	44	–	–	–	33	16.25	4.0	24	22.50	5	24	30	36
12	45	–	–	–	35	15.75	3.0	25	22.25	3	24	30	36

MINIMUM LAP LENGTH (L):
A. # 4 BARS ; L = 22 INCHES
B. # 5 BARS ; L = 27 INCHES
C. # 6 BARS ; L = 32 INCHES

NOTES:

1. THE MAXIMUM WIDTH BETWEEN LONGITUDINAL JOINTS SHALL NOT EXCEED 15'–0".
2. ALL EARTHEN AREAS ARE TO BE HYDROMULCHED UNLESS SHOWN OTHERWISE ON DRAWINGS.
3. CONTRACTOR MAY SAW CUT IN LIEU OF DEFORMED METAL STRIP.
4. USE STRIP OF SOD GRASS TO PREVENT EROSION UNTIL STAND OF GRASS IS ESTABLISHED.
5. AN EQUAL OR LARGER AREA OF WELDED REINFORCEMENT BAR CONFORMING TO ASTM A497, MAY BE SUBSTITUTED FOR REBARS LISTED IN TABLE 1.
6. IF AVAILABLE ROW IS NOT SUFFICIENT TO ACCOMMODATE SIDEWALK WIDTH (SW) ACCORDING TO IDM REQUIREMENTS, ENGINEER SHALL OBTAIN A VARIANCE FROM THE CITY ENGINEER.
7. REFER TO CONTRACT DRAWINGS FOR PAVEMENT WIDTH (PW) AND PAVEMENT THICKNESS (D), MEDIAN (M), PEDESTRIAN REALM (PR), SIDEWALK (SW), FRONTAGE BUFFER (FB), AND SAFETY BUFFER (SB) WIDTHS.

APPROVED BY:	APPROVED BY:
DocuSigned by: Sudud kanwar 9EF8B8C84 1F5478...	DocuSigned by: HANG NGUYEN 95A29EFDA758ACD...
CITY ENGINEER	CITY TRAFFIC ENGINEER
APPROVED BY: DocuSigned by: Carl Stallock A80C4108F2B3403...	
DIRECTOR OF HOUSTON PUBLIC WORKS	
EFF DATE: NOV–27–2023	DWG NO: 02751–01

CITY OF HOUSTON
HOUSTON PUBLIC WORKS STANDARD

CONCRETE PAVEMENT DETAILS

FOR CITY OF HOUSTON USE ONLY

DRAWING SCALE
NOT TO SCALE

TETRA TECH
Texas PE Firm Reg. #F-929
575 N. Dairy Ashford, Suite 700,
Houston, Texas 77079
T +1 281 589 7257
E usinfrastructure@rpsgroup.com

SURVEYED BY: KUO Inc.
FB NO. F–4578

This document is released for the purposes of interim review only under the authority of:
Neha Raval, P.E.
Texas P.E. No. 141506
09/11/2026
It is not to be used for bidding, construction, or permitting purposes.

CITY OF HOUSTON
HOUSTON PUBLIC WORKS

LIFT STATION REHABILITATION & RECONSTRUCTION

PAVEMENT DETAILS
(SHEET 1 OF 12)
STD–C–6

WBS NUMBER	FOR CITY OF HOUSTON USE ONLY
R–000267–178A–3	
DRAWING SCALE	
AS NOTED	
CITY OF HOUSTON PM	
TAHA LOTIA	
SHEET NO. 72 OF 147	

DISCLAIMER:
THE USE OF THIS STANDARD IS GOVERNED BY THE TEXAS ENGINEERING PRACTICE ACT. THE DESIGN REQUIREMENTS ON THIS STANDARD DO NOT PURPORT TO ADDRESS ALL OF THE SAFETY CONCERNS ASSOCIATED WITH THEIR USE. THE ENGINEER OF RECORD (EOR) IS TO REVIEW THESE DESIGN REQUIREMENTS AND BY AUTHORIZING THEIR USE, ACCEPTS RESPONSIBILITY FOR THEIR APPLICABILITY, ADEQUACY AND SAFETY. NO WARRANTY OF ANY KIND IS MADE BY THE CITY OF HOUSTON FOR ANY PURPOSE WHATSOEVER. THE CITY OF HOUSTON ASSUMES NO RESPONSIBILITY FOR INCORRECT RESULTS OR DAMAGES RESULTING FROM ITS USE.

FILE PATH: C:\Users\andres.martinezjr\DC\ACCDocs\Tetra Tech Inc\200-317106-24001 COH LS Rehab Design\Project Files\CAD\R-000267-178A-3\PAVEMENT DETAILS (SHEET 1 OF 12).dgn LAST EDITED: 09/12/2024 4:59 PM

DISCLAIMER:
THE USE OF THIS STANDARD IS GOVERNED BY THE TEXAS ENGINEERING PRACTICE ACT. THE DESIGN REQUIREMENTS ON THIS STANDARD DO NOT PURPORT TO ADDRESS ALL OF THE SAFETY CONCERNS ASSOCIATED WITH THEIR USE. THE ENGINEER OF RECORD (EOR) IS TO REVIEW THESE DESIGN REQUIREMENTS AND BY AUTHORIZING THEIR USE ASSUMES RESPONSIBILITY FOR ADDRESSING ALL SITE SPECIFIC HAZARDS AND SAFETY ISSUES. THE EOR SHALL BE THE CITY OF HOUSTON FOR ANY PURPOSES WHATSOEVER. THE CITY OF HOUSTON ASSUMES NO RESPONSIBILITY FOR INCORRECT RESULTS OR DAMAGES RESULTING FROM ITS USE.

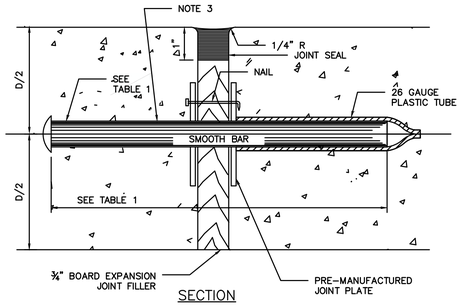

SECTION

DOWEL TYPE EXPANSION JOINT

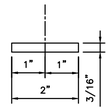

PLAN VIEW

JOINT PLATE

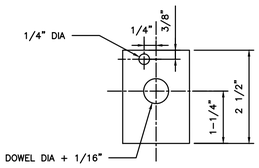

ELEVATION VIEW

JOINT PLATE

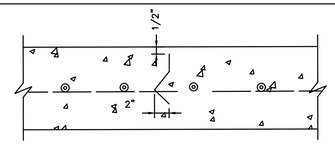

SECTION

DEFORMED METAL STRIP

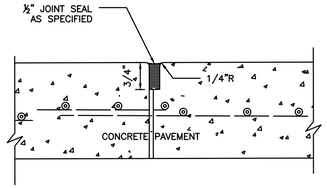

SECTION

CONSTRUCTION JOINT SEAL

TABLE 1

PAVEMENT THICKNESS (IN)	DOWEL SIZES AND SPACINGS		
	DIAMETER (IN)	LENGTH (IN)	SPACING (IN)
6	3/4	18	12
7	1	18	12
8	1	18	12
9	1 1/4	18	12
10	1 1/4	18	12
11	1 1/4	18	12
12	1 1/4	18	12

NOTES:

1. STEEL TO MEET ASTM STANDARD SPECIFICATIONS FOR CONCRETE REINFORCING BARS. UNITS TO BE SPACED 12" CENTER ON CENTER.
2. EXPANSION JOINT TO BE PLACED AT THE END OF EACH CURB RADIUS.
3. CENTER DOWEL HORIZONTALLY ON JOINT.
4. CENTER DOWEL VERTICALLY IN CONCRETE BASE. EXTEND THICKENED CONCRETE AS NEEDED TO MAINTAIN 3" MIN COVER.
5. CITY OF HOUSTON APPROVED PRODUCTS MAY BE USED AS JOINT PLATE ALTERNATIVE.

CITY OF HOUSTON
HOUSTON PUBLIC WORKS STANDARD

PAVEMENT EXPANSION AND CONSTRUCTION JOINT DETAILS

(SCALE: NOT TO SCALE)

APPROVED BY:

DocuSigned by: Sulad Kawwar — CITY ENGINEER

DocuSigned by: KHANG NGUYEN — CITY TRAFFIC ENGINEER

DocuSigned by: Carol Haddock — DIRECTOR OF HPW

EFF DATE: NOV-27-2023 | DWG NO: 02752-01

DISCLAIMER:
THE USE OF THIS STANDARD IS GOVERNED BY THE TEXAS ENGINEERING PRACTICE ACT. THE DESIGN REQUIREMENTS ON THIS STANDARD DO NOT PURPORT TO ADDRESS ALL OF THE SAFETY CONCERNS ASSOCIATED WITH THEIR USE. THE ENGINEER OF RECORD (EOR) IS TO REVIEW THESE DESIGN REQUIREMENTS AND BY AUTHORIZING THEIR USE ASSUMES RESPONSIBILITY FOR ADDRESSING ALL SITE SPECIFIC HAZARDS AND SAFETY ISSUES. THE EOR SHALL BE THE CITY OF HOUSTON FOR ANY PURPOSES WHATSOEVER. THE CITY OF HOUSTON ASSUMES NO RESPONSIBILITY FOR INCORRECT RESULTS OR DAMAGES RESULTING FROM ITS USE.

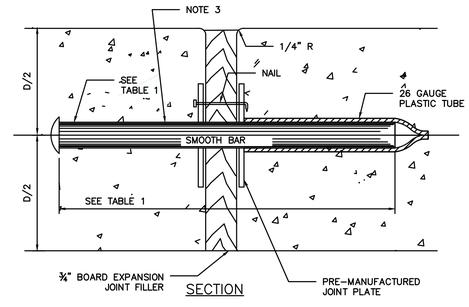

SECTION

DOWEL TYPE EXPANSION JOINT

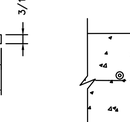

PLAN VIEW

JOINT PLATE

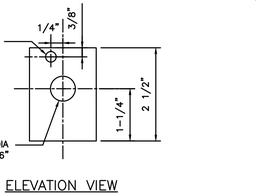

ELEVATION VIEW

JOINT PLATE

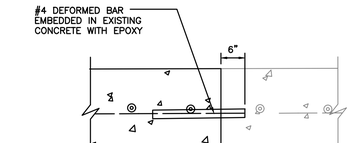

TABLE 1

PAVEMENT THICKNESS (IN)	DOWEL SIZES AND SPACINGS		
	DIAMETER (IN)	LENGTH (IN)	SPACING (IN)
4 1/2	1/2	18	12
5	1/2	18	12
6	3/4	18	12
7	1	18	12

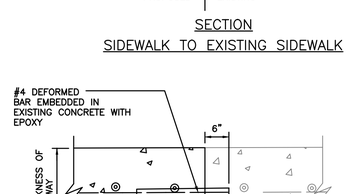

SECTION

SIDEWALK TO EXISTING SIDEWALK

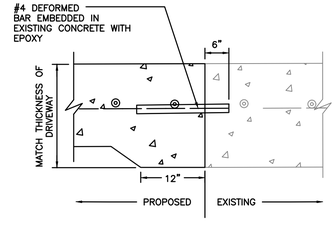

SECTION

SIDEWALK TO EXISTING DRIVEWAY

NOTES:

1. STEEL TO MEET ASTM STANDARD SPECIFICATIONS FOR CONCRETE REINFORCING BARS.
2. EXPANSION JOINT TO BE PLACED AT THE END OF EACH CURB RADIUS AND SPACED AT A MAXIMUM DISTANCE OF 3 FEET MAXIMUM SPACING FOR CONTROL JOINTS SHALL BE 5 FEET.
3. CENTER DOWEL HORIZONTALLY ON JOINT.
4. CENTER DOWEL VERTICALLY IN CONCRETE AS NEEDED TO MAINTAIN A 2 INCH MINIMUM COVER.

CITY OF HOUSTON
HOUSTON PUBLIC WORKS STANDARD

SIDEWALK EXPANSION AND CONSTRUCTION JOINT DETAILS

(SCALE: NOT TO SCALE)

APPROVED BY:

DocuSigned by: Sulad Kawwar — CITY ENGINEER

DocuSigned by: KHANG NGUYEN — CITY TRAFFIC ENGINEER

DocuSigned by: Carol Haddock — DIRECTOR OF HPW

EFF DATE: NOV-27-2023 | DWG NO: 02752-02

A TETRA TECH COMPANY
Texas PE Firm Reg. #F-929
575 N. Dairy Ashford, Suite 700,
Houston, Texas 77079
T +1 281 589 7257
E usinfrastructure@rpsgroup.com

SURVEYED BY: KUO Inc.
FB NO. F-4578

This document is released for the purposes of interim review only under the authority of:

Neha Raval, P.E.
Texas P.E. No. 141506
09/11/2026

It is not to be used for bidding, construction, or permitting purposes.

CITY OF HOUSTON
HOUSTON PUBLIC WORKS

LIFT STATION REHABILITATION & RECONSTRUCTION

PAVEMENT DETAILS
(SHEET 2 OF 12)
STD-C-7

WBS NUMBER	FOR CITY OF HOUSTON USE ONLY
R-000267-178A-3	
DRAWING SCALE	
AS NOTED	
CITY OF HOUSTON PM	
TAHA LOTIA	
SHEET NO. 73 OF 147	

FILE PATH: C:\Users\andres.martinezjr\DC\ACCDocs\Tetra Tech Inc\200-317106-24001 COH LS Rehab Design\Project Files\CAD\R-000267-178A-3_PAVEMENT DETAILS (SHEET 2 OF 12).DGN
PLOTTED: 09/12/2025 4:59 PM

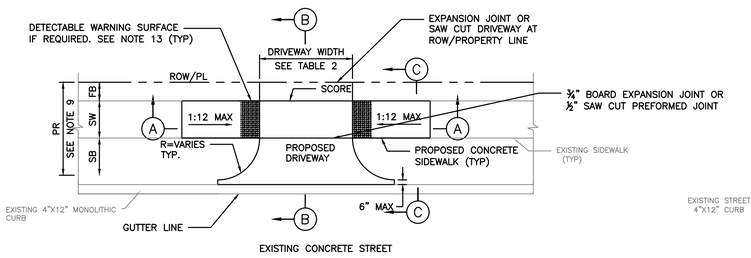

PLAN VIEW
DRIVEWAY

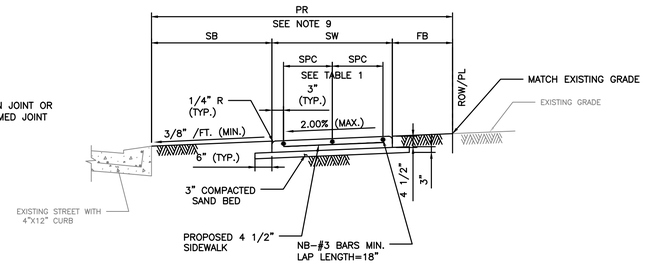

SECTION C–C
TYPICAL SIDEWALK SECTION

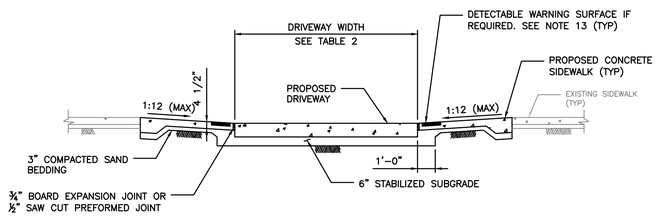

SECTION A–A
PROPOSED SIDEWALK, THROUGH DRIVEWAY WITH EXCESSIVE GRADES

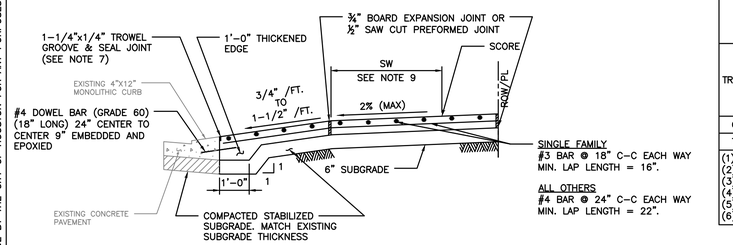

SECTION B–B
TYPICAL DRIVEWAY SECTION

TABLE 1

REINFORCING STEEL INFORMATION
FOR 4 ½ " THICK SIDEWALKS
EXPANSION JOINT SPACING = 40 FT
fc' = 3,500 PSI AND fy = 60,000 PSI
REFER TO CONTRACT DRAWINGS FOR SIDEWALKS WIDER THAN 6 FEET.

SIDEWALK THICKNESS (IN)	SIDEWALK WIDTH (FT)	LONGITUDINAL STEEL			TRANSVERSE STEEL #3 BARS SPACING (IN)
		#3 BARS			
		NO. OF BARS "NB"	SPACING "SPC" (IN)	END BAR SPACING (IN)	
4.5	5	3	27	3	48
4.5	6	4	22	3	48

TABLE 2

DRIVEWAY DESIGN CRITERIA (1)(2)

TRAFFIC TYPE	TYPE A DRIVEWAY (FOR SINGLE FAMILY RESIDENTIAL HOUSES OR DUPLEXES)				TYPE B DRIVEWAY (SHARED ACCESS/SHARED DRIVEWAY)				TYPE C DRIVEWAY (COMMERCIAL DRIVEWAY)			
	WIDTH (FT)		RADIUS (FT)		WIDTH (FT)		RADIUS (FT)		WIDTH (FT)		RADIUS (FT)	
	MIN	MAX	MIN	MAX	MIN	MAX	MIN	MAX	MIN	MAX	MIN	MAX
ONE-WAY	10	12	4	10	12(5)	16(5)	4(5)	10(5)	15	20	10	20
TWO-WAY	10(3)	24(4)	4	10	16(6)	24	4	10	24	35	10	20

(1) REFER TO INFRASTRUCTURE DESIGN MANUAL ARTICLE 15.2.07.C.1.F FOR DRIVEWAYS THAT REQUIRE A VEHICLE SWEPT PATH ANALYSIS.
(2) REFER TO INFRASTRUCTURE DESIGN MANUAL ARTCILES 15.2.07.C.1.G.(1) AND 15.2.07.C.1.G.(2) FOR TYPE 1 PAE AND TYPE 2 PAE REQUIREMENTS.
(3) THE MINIMUM WIDTH FOR JOINT ACCESS DRIVEWAY IS 12 FT.
(4) REFER TO CHAPTER 42 OF THE CODE OF ORDINANCES FOR DRIVEWAY WIDTHS FOR NARROW LOTS.
(5) ONLY MURS AND COURTYARD STYLE DEVELOPMENTS ON CORNER LOTS CAN HAVE ONE-WAY DRIVEWAYS.
(6) REFER TO CHAPTER 42, SECTION 42-146 OF THE CODE OF ORDINANCES FOR EXCEPTIONS TO THE MINIMUM DRIVEWAY WIDTH FOR SHARED DRIVEWAYS.

NOTES:

1. REPAIR, RECONSTRUCTION OR REPLACEMENT OF SIDEWALKS SHALL MEET PERMITTING REQUIREMENTS OF CODE OF ORDINANCES SECTION 40–552.
2. FOR REPAIR, RECONSTRUCTION, OR REPLACEMENT OF EXISTING SIDEWALKS:
   - 2.1. EXISTING SIDEWALKS LESS THAN OR EQUAL TO 20 FEET IN TOTAL LENGTH:
     - 2.1.1. THE PROPOSED SIDEWALK WIDTH WILL BE ALLOWED TO MATCH THE EXISTING SIDEWALK.
   - 2.2. EXISTING SIDEWALKS GREATER THAN 20 FEET IN TOTAL LENGTH:
     - 2.2.1. THE SIDEWALK WIDTH FOR THE ENTIRE PROPERTY WIDTH SHALL BE IMPROVED TO MEET WIDTH REQUIREMENTS ACCORDING TO THE LATEST INFRASTRUCTURE DESIGN MANUAL.
   - 2.3. 20 FOOT TOTAL LENGTH IS DEFINED AS:
     - 2.3.1. UP TO 10 FEET ON BOTH SIDES OF THE DRIVEWAY; OR
     - 2.3.2. UP TO 20 FEET WHEN SIDEWALK AFFECTED IS LOCATED ONLY ON ONE SIDE OF THE DRIVEWAY.
3. IF AVAILABLE ROW IS NOT SUFFICIENT TO ACCOMMODATE SIDEWALK WIDTH (SW) ACCORDING TO IDM REQUIREMENTS, ENGINEER SHALL OBTAIN A VARIANCE FROM THE CITY ENGINEER.
4. DRIVEWAYS SHALL BE 6" THICK FOR SINGLE FAMILY OR DUPLEXES.
5. DRIVEWAYS AND SIDEWALKS SHALL BE CONSTRUCTED WITH PORTLAND CEMENT CONCRETE AND INCLUDE 5 1/2 SACKS OF CEMENT PER CUBIC YARD OF CONCRETE.
6. THE OUTER DOWEL BARS ARE TO BE LOCATED 12" FROM END OF PROPOSED EDGE OF DRIVEWAY RETURN. EXTEND DOWEL 3" INCHES INTO PROPOSED DRIVEWAY AND BEND REMAINING BAR TO EXTEND TO RADIUS RETURN BOTH SIDES.
7. TROWEL GROOVE SEALANT SHALL BE LOW MODULUS SILICONE OR POLYURETHANE SEALANT.
8. ALL JOINTS ALONG THE SIDEWALK SHALL BE CONSTRUCTED ACCORDING TO DRAWING 02752–02 AND SPECIFICATION 02752.
9. REFER TO CONTRACT DRAWINGS FOR PEDESTRIAN REALM (PR), SIDEWALK (SW), FRONTAGE BUFFER (FB), AND SAFETY BUFFER (SB) WIDTHS.
10. CEMENT STABILIZED SAND 1.5 SACKS OF CEMENT PER TON OF DRY SAND.
11. ALL RAMPS AND SIDEWALKS/WALKWAYS SHALL BE CONSTRUCTED IN ACCORDANCE WITH HOUSTON PUBLIC WORKS STANDARDS, TEXAS ACCESSIBILITY STANDARDS (TAS) AND AMERICANS WITH DISABILITIES ACT (ADA) REQUIREMENTS. IF THERE IS A CONFLICT IN THE REQUIREMENTS, THE STRICTEST REQUIREMENTS SHALL GOVERN.
12. CURB RAMPS THAT ARE STEEPER THAN A 1:12 MAX SLOPE WILL NOT BE ACCEPTED BY THE CITY OF HOUSTON.
13. DETECTABLE WARNING SURFACES:
    - 13.1. SIDEWALK SHALL HAVE A DETECTABLE WARNING SURFACE WHERE:
      - 13.1.1. SIDEWALK INTERSECTS TYPE C DRIVEWAYS (COMMERCIAL DRIVEWAYS) THAT ARE STOP, YIELD OR TRAFFIC SIGNAL CONTROLLED; OR
      - 13.1.2. SIDEWALK SLOPE IS GREATER THAN 1:20 AND INTERSECTS A TYPE C DRIVEWAY (COMMERCIAL DRIVEWAY)
    - 13.2. DETECTABLE WARNING SURFACES ARE OPTIONAL WHERE SIDEWALKS INTERSECT TYPE A DRIVEWAYS (SINGLE FAMILY RESIDENTIAL HOUSES OR DUPLEXES) OR TYPE B DRIVEWAYS (SHARED ACCESS/SHARED DRIVEWAYS).
    - 13.3. REFER TO STANDARD DETAILS 02775–06 TO 02775–07 FOR DETECTABLE WARNING SURFACE STANDARDS.

APPROVED BY:	APPROVED BY:
Docusigned by: Sukait Kanwar 9EF1BB0C041754...	Docusigned by: Hailing Nguyen 95A28EFDA75B4CD...
CITY ENGINEER	CITY TRAFFIC ENGINEER

APPROVED BY:
Docusigned by: Carol Haddock A6DCA1B5E5E5453...
DIRECTOR OF HOUSTON PUBLIC WORKS

EFF DATE: NOV–27–2023	DWG NO: 02754–01A

CITY OF HOUSTON
HOUSTON PUBLIC WORKS STANDARD

DRIVEWAY DETAIL WITH 4"x12" CURB FOR LOCAL RESIDENTIAL STREETS

	FOR CITY OF HOUSTON USE ONLY
DRAWING SCALE	
NOT TO SCALE	

RPS A TETRA TECH COMPANY
Texas PE Firm Reg. #F-929
575 N. Dairy Ashford, Suite 700, Houston, Texas 77079
T +1 281 589 7257
E usinfrastructure@rpsgroup.com

SURVEYED BY: KUO Inc.
FB NO. F–4578

This document is released for the purposes of interim review only under the authority of:
Neha Raval, P.E.
Texas P.E. No. 141506
09/11/2026
It is not to be used for bidding, construction, or permitting purposes.

CITY OF HOUSTON
HOUSTON PUBLIC WORKS

LIFT STATION REHABILITATION & RECONSTRUCTION

PAVEMENT DETAILS
(SHEET 3 OF 12)
STD–C–8

WBS NUMBER	FOR CITY OF HOUSTON USE ONLY
R–000267–178A–3	
DRAWING SCALE	
AS NOTED	
CITY OF HOUSTON PM	
TAHA LOTIA	
SHEET NO. 74 OF 147	

DISCLAIMER:
THE USE OF THIS STANDARD IS GOVERNED BY THE TEXAS ENGINEERING PRACTICE ACT. THE DESIGN REQUIREMENTS ON THIS STANDARD DO NOT PURPORT TO ADDRESS ALL OF THE SAFETY CONCERNS ASSOCIATED WITH THEIR USE. THE ENGINEER OF RECORD, (EOR) IS TO REVIEW THESE DESIGN REQUIREMENTS AND BY AUTHORIZING THEIR USE, ACCEPTS RESPONSIBILITY FOR THEIR APPLICABILITY, ADEQUACY AND SAFETY. NO WARRANTY OF ANY KIND IS MADE BY THE CITY OF HOUSTON FOR ANY PURPOSES WHATSOEVER. THE CITY OF HOUSTON ASSUMES NO RESPONSIBILITY FOR INCORRECT RESULTS OR DAMAGES RESULTING FROM ITS USE.

FILE PATH: C:\Users\andres.martinezjr\DC\ACCDocs\Tetra Tech Inc\200-317106-24001 COH LS Rehab Design\Project Files\CAD\R-000267-178A-3_STD_C-8_DRIVEWAY DETAILS (SHEET 3 OF 12).dwg PLOTTED: 09/12/2026 4:59 PM

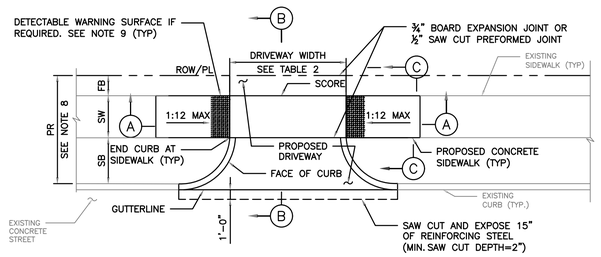

PLAN VIEW
DRIVEWAY

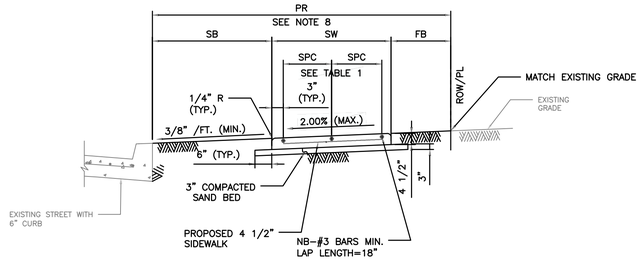

SECTION C–C
TYPICAL SIDEWALK SECTION

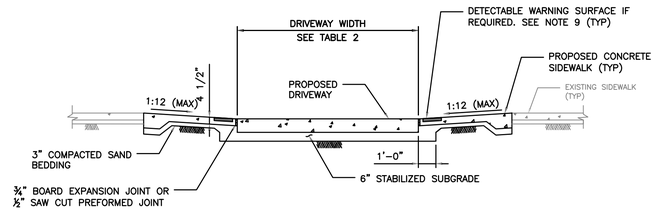

SECTION A–A
PROPOSED SIDEWALK THROUGH DRIVEWAY
WITH EXCESSIVE ELEVATION DIFFERENCE
WITH EXISTING SIDEWALK

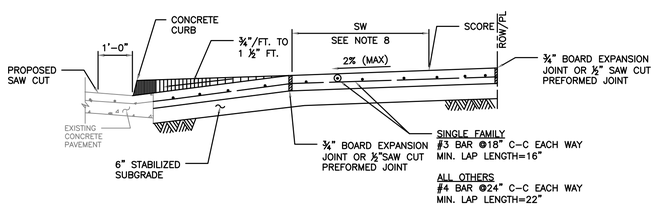

SECTION B–B
TYPICAL DRIVEWAY SECTION

TABLE 1

REINFORCING STEEL INFORMATION
FOR 4 ½ " THICK SIDEWALKS
EXPANSION JOINT SPACING = 40 FT
fc' = 3,500 PSI AND fy = 60,000 PSI
REFER TO CONTRACT DRAWINGS FOR SIDEWALKS WIDER THAN 6 FEET.

SIDEWALK THICKNESS (IN)	SIDEWALK WIDTH (FT)	LONGITUDINAL STEEL #3 BARS			TRANSVERSE STEEL #3 BARS SPACING (IN)
		NO. OF BARS "NB"	SPACING "SPC" (IN)	END BAR SPACING (IN)	
4.5	5	3	27	3	48
4.5	6	4	22	3	48

TABLE 2

DRIVEWAY DESIGN CRITERIA (1)(2)

TRAFFIC TYPE	TYPE A DRIVEWAY (FOR SINGLE FAMILY RESIDENTIAL HOUSES OR DUPLEXES)				TYPE B DRIVEWAY (SHARED ACCESS/SHARED DRIVEWAY)				TYPE C DRIVEWAY (COMMERCIAL DRIVEWAY)			
	WIDTH (FT)		RADIUS (FT)		WIDTH (FT)		RADIUS (FT)		WIDTH (FT)		RADIUS (FT)	
	MIN	MAX	MIN	MAX	MIN	MAX	MIN	MAX	MIN	MAX	MIN	MAX
ONE–WAY	10	12	4	10	12(5)	16(5)	4(5)	10(5)	15	20	10	20
TWO–WAY	10(3)	24(4)	4	10	16(6)	24	4	10	24	35	10	20

(1) REFER TO INFRASTRUCTURE DESIGN MANUAL ARTICLE 15.2.07.C.1.F FOR DRIVEWAYS THAT REQUIRE A VEHICLE SWEPT PATH ANALYSIS.
(2) REFER TO INFRASTRUCTURE DESIGN MANUAL ARTCILES 15.2.07.C.1.G.(1) AND 15.2.07.C.1.G.(2) FOR TYPE 1 PAE AND TYPE 2 PAE REQUIREMENTS.
(3) THE MINIMUM WIDTH FOR JOINT ACCESS DRIVEWAY IS 12 FT.
(4) REFER TO CHAPTER 42 OF THE CODE OF ORDINANCES FOR DRIVEWAY WIDTHS FOR NARROW LOTS.
(5) ONLY MURS AND COURTYARD STYLE DEVELOPMENTS ON CORNER LOTS CAN HAVE ONE–WAY DRIVEWAYS.
(6) REFER TO CHAPTER 42, SECTION 42–146 OF THE CODE OF ORDINANCES FOR EXCEPTIONS TO THE MINIMUM DRIVEWAY WIDTH FOR SHARED DRIVEWAYS.

NOTES:

1. REPAIR, RECONSTRUCTION OR REPLACEMENT OF SIDEWALKS SHALL MEET PERMITTING REQUIREMENTS OF CODE OF ORDINANCES SECTION 40–552.
2. FOR REPAIR, RECONSTRUCTION, OR REPLACEMENT OF EXISTING SIDEWALKS:
   - 2.1. EXISTING SIDEWALKS LESS THAN OR EQUAL TO 20 FEET IN TOTAL LENGTH:
     - 2.1.1. THE PROPOSED SIDEWALK WIDTH WILL BE ALLOWED TO MATCH THE EXISTING SIDEWALK.
   - 2.2. EXISTING SIDEWALKS GREATER THAN 20 FEET IN TOTAL LENGTH:
     - 2.2.1. THE SIDEWALK WIDTH FOR THE ENTIRE PROPERTY WIDTH SHALL BE IMPROVED TO MEET WIDTH REQUIREMENTS ACCORDING TO THE LATEST INFRASTRUCTURE DESIGN MANUAL.
   - 2.3. 20 FOOT TOTAL LENGTH IS DEFINED AS:
     - 2.3.1. UP TO 10 FEET ON BOTH SIDES OF THE DRIVEWAY; OR
     - 2.3.2. UP TO 20 FEET WHEN SIDEWALK AFFECTED IS LOCATED ONLY ON ONE SIDE OF THE DRIVEWAY.
3. ALL JOINTS ALONG THE SIDEWALK SHALL BE CONSTRUCTED ACCORDING TO DRAWING 02752–02 AND SPECIFICATION 02752.
4. DRIVEWAYS SHALL BE MINIMUM 6" THICK FOR SINGLE FAMILY AND DUPLEXES. DRIVEWAYS SHALL BE MINIMUM 7" THICK FOR ALL OTHERS (I.E. COMMERCIAL, INDUSTRIAL, ETC.)
5. DRIVEWAYS AND SIDEWALKS SHALL BE CONSTRUCTED WITH PORTLAND CEMENT CONCRETE AND INCLUDE 5 1/2 SACKS OF CEMENT PER CUBIC YARD OF CONCRETE.
6. ALL RAMPS AND SIDEWALKS/WALKWAYS SHALL BE CONSTRUCTED IN ACCORDANCE WITH HOUSTON PUBLIC WORKS STANDARDS, TEXAS ACCESSIBILITY STANDARDS (TAS) AND AMERICANS WITH DISABILITIES ACT (ADA) REQUIREMENTS. IF THERE IS A CONFLICT IN THE REQUIREMENTS, THE STRICTEST REQUIREMENTS SHALL GOVERN.
7. CURB RAMPS THAT ARE STEEPER THAN A 1:12 MAX SLOPE WILL NOT BE ACCEPTED BY THE CITY OF HOUSTON.
8. REFER TO CONTRACT DRAWINGS FOR PEDESTRIAN REALM (PR), SIDEWALK (SW), FRONTAGE BUFFER (FB), AND SAFETY BUFFER (SB) WIDTHS.
9. DETECTABLE WARNING SURFACES:
   - 9.1. SIDEWALK SHALL HAVE A DETECTABLE WARNING SURFACE WHERE:
     - 9.1.1. SIDEWALK INTERSECTS TYPE C DRIVEWAYS (COMMERCIAL DRIVEWAYS) THAT ARE STOP, YIELD, OR TRAFFIC SIGNAL CONTROLLED; OR
     - 9.1.2. SIDEWALK SLOPE IS GREATER THAN 1:20 AND INTERSECTS A TYPE C DRIVEWAY (COMMERCIAL DRIVEWAY)
   - 9.2. DETECTABLE WARNING SURFACES ARE OPTIONAL WHERE SIDEWALKS INTERSECT TYPE A DRIVEWAYS (SINGLE FAMILY RESIDENTIAL HOUSES OR DUPLEXES) OR TYPE B DRIVEWAYS (SHARED ACCESS/SHARED DRIVEWAYS).
   - 9.3. REFER TO STANDARD DETAILS 02775–06 TO 02775–07 FOR DETECTABLE WARNING SURFACE STANDARDS.

APPROVED BY:	APPROVED BY:
Docusigned by: Sukut Kunwar 0EFB8DC641F9478...	Docusigned by: KHANG NGUYEN 95A09EFDA75B4CD...
CITY ENGINEER	CITY TRAFFIC ENGINEER
APPROVED BY: Docusigned by: Carol Haddock A89C4165F2B3403...	
DIRECTOR OF HOUSTON PUBLIC WORKS	
EFF DATE: NOV–27–2023	DWG NO: 02754–01B

CITY OF HOUSTON
HOUSTON PUBLIC WORKS STANDARD

DRIVEWAY DETAIL WITH 6" CURBED STREETS

	FOR CITY OF HOUSTON USE ONLY
DRAWING SCALE	
NOT TO SCALE	

A TETRA TECH COMPANY
Texas PE Firm Reg. #F-929
575 N. Dairy Ashford, Suite 700, Houston, Texas 77079
T +1 281 589 7257
E usinfrastructure@rpsgroup.com

SURVEYED BY: KUO Inc.
FB NO. F–4578

This document is released for the purposes of interim review only under the authority of:
Neha Raval, P.E.
Texas P.E. No. 141506
09/11/2026
It is not to be used for bidding, construction, or permitting purposes.

CITY OF HOUSTON
HOUSTON PUBLIC WORKS

LIFT STATION REHABILITATION & RECONSTRUCTION

PAVEMENT DETAILS
(SHEET 4 OF 12)
STD–C–9

WBS NUMBER	FOR CITY OF HOUSTON USE ONLY
R–000267–178A–3	
DRAWING SCALE	
AS NOTED	
CITY OF HOUSTON PM	
TAHA LOTIA	
SHEET NO. 75 OF 147	

DISCLAIMER:
THE USE OF THIS STANDARD IS GOVERNED BY THE TEXAS ENGINEERING PRACTICE ACT. THE DESIGN REQUIREMENTS ON THIS STANDARD DO NOT PURPORT TO ADDRESS ALL OF THE SAFETY CONCERNS ASSOCIATED WITH THEIR USE. THE ENGINEER OF RECORD (EOR) IS TO REVIEW THESE DESIGN REQUIREMENTS AND BY AUTHORIZING THEIR USE, ACCEPTS RESPONSIBILITY FOR THEIR APPLICABILITY, ADEQUACY AND SAFETY. NO WARRANTY OF ANY KIND IS MADE BY THE CITY OF HOUSTON FOR ANY PURPOSES WHATSOEVER. THE CITY OF HOUSTON ASSUMES NO RESPONSIBILITY FOR INCORRECT RESULTS OR DAMAGES RESULTING FROM ITS USE.

FILE PATH: C:\Users\andres.martinezjr\DC\ACCDocs\Tetra Tech Inc\200–317106–24001 COH LS Rehab Design\Project Files\CAD\R–000267–178A–3 PAVEMENT DETAILS (SHEET 4 OF 12) STD–C–9.dgn PLOTTED: 09/12/2026 4:59 PM

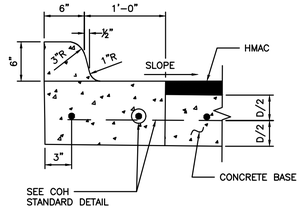

ESPLANADE CURB CONNECTED TO CONCRETE BASE

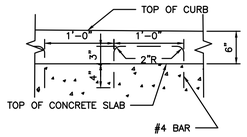

ALTERNATE CONCRETE CURB REINFORCEMENT

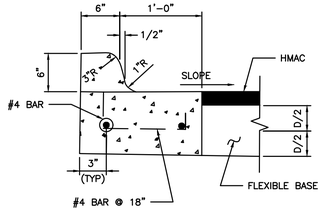

ESPLANADE CURB CONNECTED TO FLEXIBLE BASE

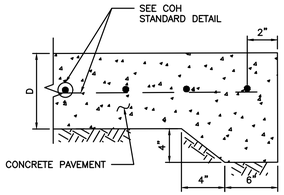

STANDARD CONCRETE PAVING HEADER

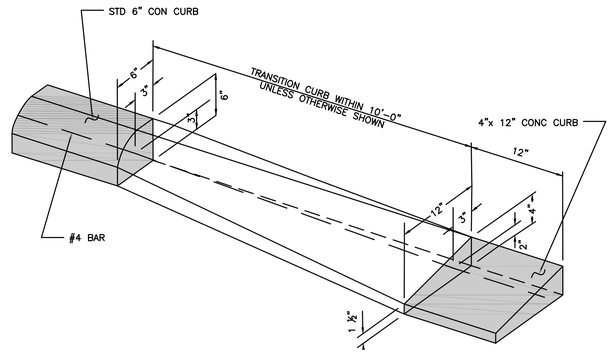

CURB TRANSITION

(SEE NOTES)

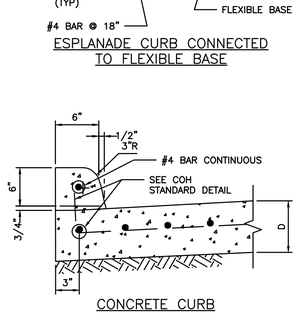

CONCRETE CURB

WHEN CONCRETE CURB IS TO BE PLACED EXISTING CONCRETE USE BASE #4 BAR @ 18x10" LONG, DOWELED AND SET IN EPOXY GROUT. SET #4 DOWEL BARS, 25" LONG AT 12" C-C WHEN PAVEMENT SECTION POURED.

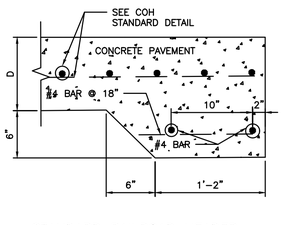

STANDARD RAILROAD HEADER

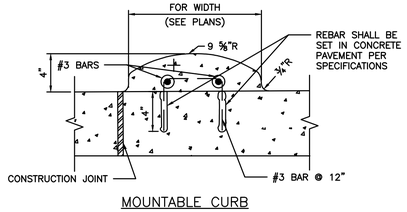

MOUNTABLE CURB

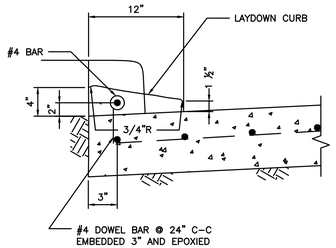

4-INCH x 12-INCH TRANSITION CURB

(SEE NOTES)

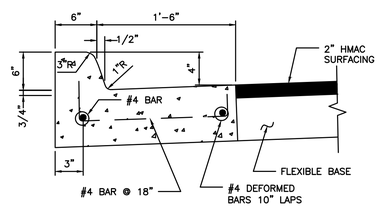

MONOLITHIC CURB AND GUTTER

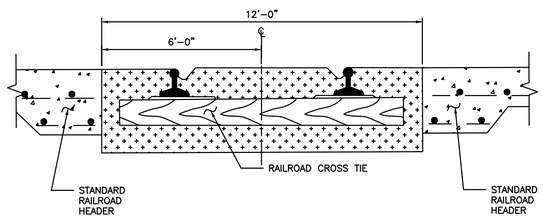

STANDARD RAILROAD CROSSING – SINGLE TRACK

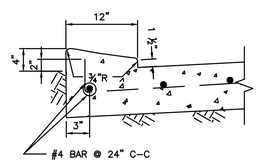

4-INCH x 12-INCH MONOLITHIC CURB

(SEE NOTES)

4"x12" MONOLITHIC AND TRANSITION CURB NOTES:

1. 6-INCH CONCRETE CURB TO BE CONSTRUCTED ON ALL ESPLANADES, ISLANDS, NON-RESIDENTIAL STREETS, AND RESIDENTIAL STREETS.
2. TRANSITIONS FROM 6- INCH CONCRETE CURB TO 4-INCH x 12-INCH CONCRETE CURB TO BE ACCOMPLISHED WITHIN 10 FEET, UNLESS OTHERWISE SHOWN. IF THIS 10-FEET TRANSITION CURB IS NOT POURED MONOLITHICALLY WITH THE PAVEMENT, THEN REINFORCING STEEL AS SHOWN IN "4-INCH x 12-INCH TRANSITION CURB" IS TO BE INSTALLED.

APPROVED BY:	APPROVED BY:
DocuSigned by: Sukut Kanwar 3C7B50C0A1F34F8...	DocuSigned by: KHANG NGUYEN 9EA3DE83A75B4CD...
CITY ENGINEER	CITY TRAFFIC ENGINEER
APPROVED BY: DocuSigned by: Carol Haddock A60C4159D3B34B3...	
DIRECTOR OF HOUSTON PUBLIC WORKS	
EFF DATE: NOV-27-2023	DWG NO: 02771-01

CITY OF HOUSTON
HOUSTON PUBLIC WORKS STANDARD

CURB, CURB AND GUTTER AND HEADER DETAILS

	FOR CITY OF HOUSTON USE ONLY
DRAWING SCALE	
NOT TO SCALE	

RPS
A TETRA TECH COMPANY
Texas PE Firm Reg. #F-929
575 N. Dairy Ashford, Suite 700,
Houston, Texas 77079
T +1 281 589 7257
E usinfrastructure@rpsgroup.com

SURVEYED BY: KUO Inc.
FB NO. F-4578

This document is released for the purposes of interim review only under the authority of:

Neha Raval, P.E.
Texas P.E. No. 141506
09/11/2026

It is not to be used for bidding, construction, or permitting purposes.

CITY OF HOUSTON
HOUSTON PUBLIC WORKS

LIFT STATION REHABILITATION & RECONSTRUCTION

PAVEMENT DETAILS
(SHEET 5 OF 12)
STD-C-10

WBS NUMBER	FOR CITY OF HOUSTON USE ONLY
R-000267-178A-3	
DRAWING SCALE	
AS NOTED	
CITY OF HOUSTON PM	
TAHA LOTIA	
SHEET NO. 76 OF 147	

DISCLAIMER:
THE USE OF THIS STANDARD IS GOVERNED BY THE TEXAS ENGINEERING PRACTICE ACT. THE DESIGN REQUIREMENTS ON THIS STANDARD DO NOT PURPORT TO ADDRESS ALL OF THE SAFETY CONCERNS ASSOCIATED WITH ITS USE. IT IS THE RESPONSIBILITY OF THE DESIGN ENGINEER TO ADOPT SAFE PRACTICES IN THE USE OF THIS STANDARD AND TO DESIGN FACILITIES FOR SAFE CONDITIONS. THE CITY OF HOUSTON ASSUMES NO RESPONSIBILITY FOR ANY DESIGN OR CONSTRUCTION PERFORMED BY OTHERS WHICH IS BASED ON THIS STANDARD. NO WARRANTY OF ANY KIND IS MADE BY THE CITY OF HOUSTON FOR ANY PURPOSES WHATSOEVER. THE CITY OF HOUSTON ASSUMES NO RESPONSIBILITY FOR INCORRECT RESULTS OR DAMAGES RESULTING FROM ITS USE.

FILE PATH: C:\Users\andres.martinezjr\DC\ACCDocs\Tetra Tech Inc\200-317106-24001 COH LS Rehab Design\Project Files\CAD\R-000267-178A-3_STD_DETAILS (UNLOCKED): 09/9/2026 5:00 PM

DISCLAIMER:
THE USE OF THIS STANDARD IS GOVERNED BY THE TEXAS ENGINEERING PRACTICE ACT. THE DESIGN REQUIREMENTS ON THIS STANDARD DO NOT PURPORT TO ADDRESS ALL OF THE SAFETY CONCERNS ASSOCIATED WITH THEIR USE. THE ENGINEER OF RECORD (EOR) IS TO REVIEW THESE DESIGN REQUIREMENTS AND BY AUTHORIZING THEIR USE, ASSUMES RESPONSIBILITY FOR DESIGN ELEMENTS WHICH MAY NOT ADEQUATELY ADDRESS SITE SPECIFIC SAFETY ISSUES. THE CITY OF HOUSTON IS NOT RESPONSIBLE FOR ANY DESIGN ELEMENTS WHICH MAY BE REQUIRED BY THE EOR. WHATSOEVER, THE CITY OF HOUSTON ASSUMES NO RESPONSIBILITY FOR INCORRECT RESULTS OR DAMAGES RESULTING FROM ITS USE.

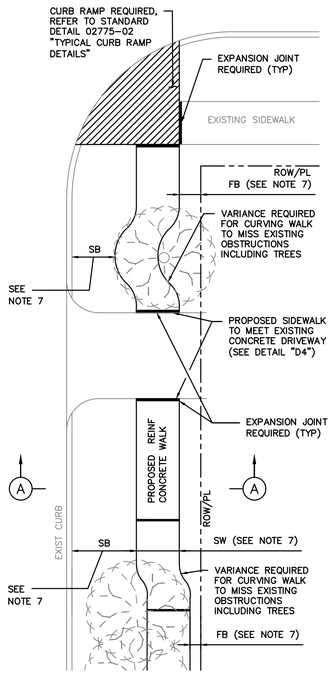

PLAN VIEW

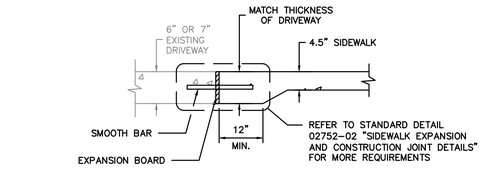

DETAIL D4
DRIVEWAY/SIDEWALK HEADER

TABLE 1

REINFORCING STEEL INFORMATION
FOR 4 ½ " THICK SIDEWALKS
EXPANSION JOINT SPACING = 40 FT
fc' = 3,500 PSI AND fy = 60,000 PSI
REFER TO CONTRACT DRAWINGS FOR SIDEWALKS WIDER THAN 6 FEET.

SIDEWALK THICKNESS (IN)	SIDEWALK WIDTH (FT)	LONGITUDINAL STEEL			TRANSVERSE STEEL #3 BARS SPACING (IN)
		#3 BARS			
		NO. OF BARS	SPACING (IN)	END BAR SPACING (IN)	
4.5	5	3	27	3	48
4.5	6	4	22	3	48

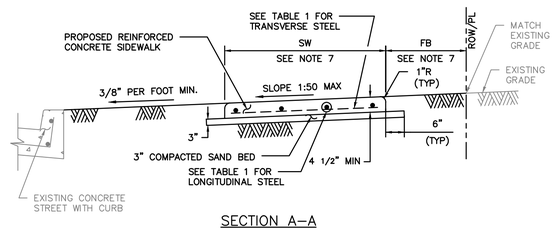

SECTION A-A

NOTES:

1. 6X6 – W2.9XW2.9 WELDED WIRE FABRIC MAY BE USED IN LIEU OF THE REINFORCING STEEL GIVEN IN TABLE 1.
2. REINFORCED CONCRETE SIDEWALKS THRU DRIVEWAYS OPENINGS SHALL BE EITHER 6" THICK OR 7" THICK AS SPECIFIED ON 6" STABILIZED SUBGRADE. FOR THE REINFORCING STEEL REQUIREMENTS, SEE CITY OF HOUSTON STANDARD DETAILS 02754-01A, 02754-01B, 02754-03, AND 02754-04.
3. MAXIMUM SPACING FOR EXPANSION JOINTS SHALL BE 40 FEET.
4. CONTRACTOR SHALL CONSTRUCT SIDEWALK IN A MANNER NOT TO BLOCK THE NATURAL DRAINAGE FROM ADJACENT PROPERTY.
5. ALL RAMPS AND SIDEWALKS/WALKWAYS SHALL BE CONSTRUCTED IN ACCORDANCE WITH HOUSTON PUBLIC WORKS STANDARDS, TEXAS ACCESSIBILITY STANDARDS (TAS) AND AMERICANS WITH DISABILITIES ACT (ADA) REQUIREMENTS. IF THERE IS A CONFLICT IN THE REQUIREMENTS, THE STRICTEST REQUIREMENTS SHALL GOVERN.
6. CURB RAMPS THAT ARE STEEPER THAN A 1:12 MAX SLOPE WILL NOT BE ACCEPTED BY THE CITY OF HOUSTON UNLESS NOTED OTHERWISE.
7. REFER TO CONTRACT DRAWINGS FOR SIDEWALK (SW), FRONTAGE BUFFER (FB), AND SAFETY BUFFER (SB) WIDTHS.

CITY OF HOUSTON
HOUSTON PUBLIC WORKS STANDARD

TYPICAL SIDEWALK LAYOUT AND DETAILS FOR STREETS WITH CURBS
(SCALE: NOT TO SCALE)

APPROVED BY:

DocuSigned by: Sulail Kanwar — CITY ENGINEER
DocuSigned by: KHANG NGUYEN — CITY TRAFFIC ENGINEER
DocuSigned by: Carol Haddock — DIRECTOR OF HPW

EFF DATE: NOV-27-2023 | DWG NO: 02775-01

DISCLAIMER:
THE USE OF THIS STANDARD IS GOVERNED BY THE TEXAS ENGINEERING PRACTICE ACT. THE DESIGN REQUIREMENTS ON THIS STANDARD DO NOT PURPORT TO ADDRESS ALL OF THE SAFETY CONCERNS ASSOCIATED WITH THEIR USE. THE ENGINEER OF RECORD (EOR) IS TO REVIEW THESE DESIGN REQUIREMENTS AND BY AUTHORIZING THEIR USE, ASSUMES RESPONSIBILITY FOR DESIGN ELEMENTS WHICH MAY NOT ADEQUATELY ADDRESS SITE SPECIFIC SAFETY ISSUES. THE CITY OF HOUSTON IS NOT RESPONSIBLE FOR ANY DESIGN ELEMENTS WHICH MAY BE REQUIRED BY THE EOR. WHATSOEVER, THE CITY OF HOUSTON ASSUMES NO RESPONSIBILITY FOR INCORRECT RESULTS OR DAMAGES RESULTING FROM ITS USE.

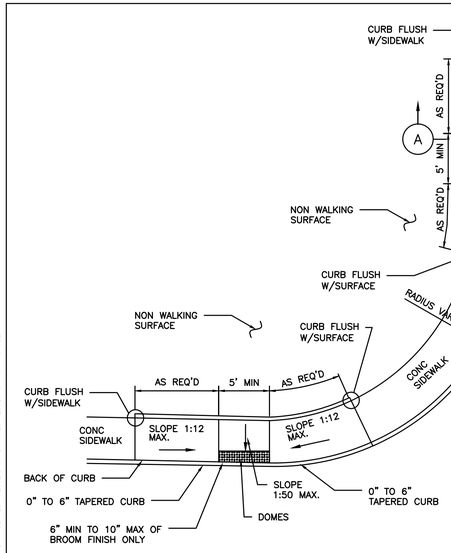

SIDEWALK ON BACK OF CURB

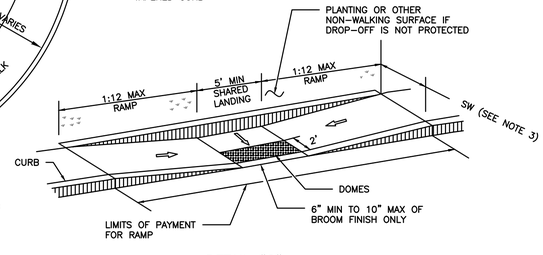

DETAIL "C"

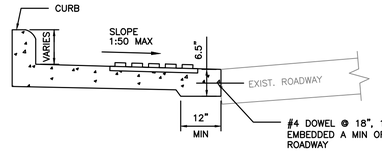

SECTION A-A

NOTES:

1. ALL RAMPS AND SIDEWALKS/WALKWAYS SHALL BE CONSTRUCTED IN ACCORDANCE WITH HOUSTON PUBLIC WORKS STANDARDS, TEXAS ACCESSIBILITY STANDARDS (TAS) AND AMERICANS WITH DISABILITIES ACT (ADA) REQUIREMENTS. IF THERE IS A CONFLICT IN THE REQUIREMENTS, THE STRICTEST REQUIREMENTS SHALL GOVERN.
2. CURB RAMPS THAT ARE STEEPER THAN A 1:12 MAX SLOPE WILL NOT BE ACCEPTED BY THE CITY OF HOUSTON.
3. REFER TO CONTRACT DRAWINGS FOR S-DIMENSION (S), SIDEWALK (SW), FRONTAGE BUFFER (FB), AND SAFETY BUFFER (SB) WIDTHS.

CITY OF HOUSTON
HOUSTON PUBLIC WORKS STANDARD

PARALLEL CURB RAMP
(SCALE: NOT TO SCALE)

APPROVED BY:

DocuSigned by: Sulail Kanwar — CITY ENGINEER
DocuSigned by: KHANG NGUYEN — CITY TRAFFIC ENGINEER
DocuSigned by: Carol Haddock — DIRECTOR OF HPW

EFF DATE: NOV-27-2023 | DWG NO: 02775-03

RPS — A TETRA TECH COMPANY
Texas PE Firm Reg. #F-929
575 N. Dairy Ashford, Suite 700, Houston, Texas 77079
T +1 281 589 7257
E usinfrastructure@rpsgroup.com

SURVEYED BY: KUO Inc.
FB NO. F-4578

This document is released for the purposes of interim review only under the authority of:
Neha Raval, P.E.
Texas P.E. No. 141506
09/11/2026
It is not to be used for bidding, construction, or permitting purposes.

CITY OF HOUSTON
HOUSTON PUBLIC WORKS

LIFT STATION REHABILITATION & RECONSTRUCTION

PAVEMENT DETAILS
(SHEET 6 OF 12)
STD-C-11

WBS NUMBER	FOR CITY OF HOUSTON USE ONLY
R-000267-178A-3	
DRAWING SCALE	
AS NOTED	
CITY OF HOUSTON PM	
TAHA LOTIA	
SHEET NO. 77 OF 147	

FILE PATH: C:\Users\andres.martinezjr\DC\ACCDocs\Tetra Tech Inc\200-317106-24001 COH LS Rehab Design\Project Files\CAD\R-000267-178A-3_STD_DETAILS (SHEET 6 OF 12).dwg LAST EDITED: 09/9/2026 5:00 PM

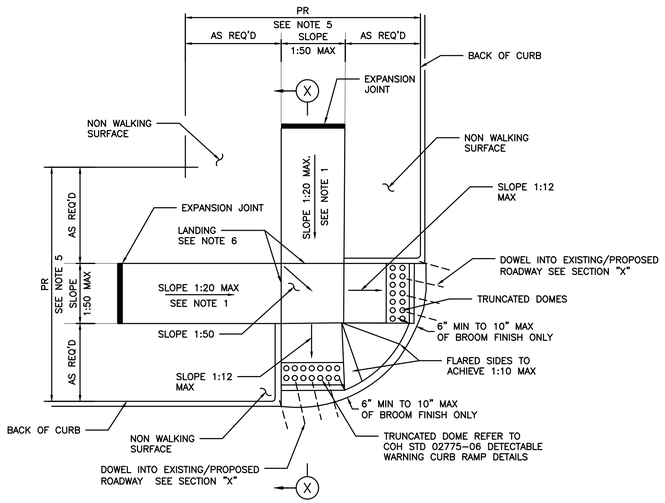

STREETS WITH NON- WALKING SURFACE BEHIND CURB
SEE NOTE-7

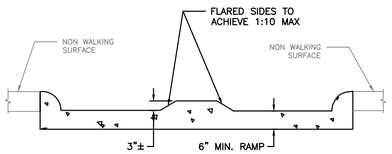

ELEVATION
LOOKING UP RAMP

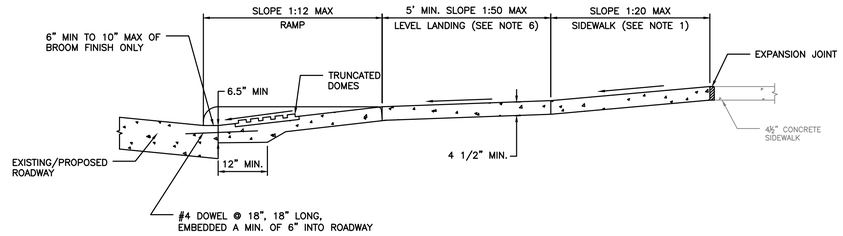

SECTION X-X

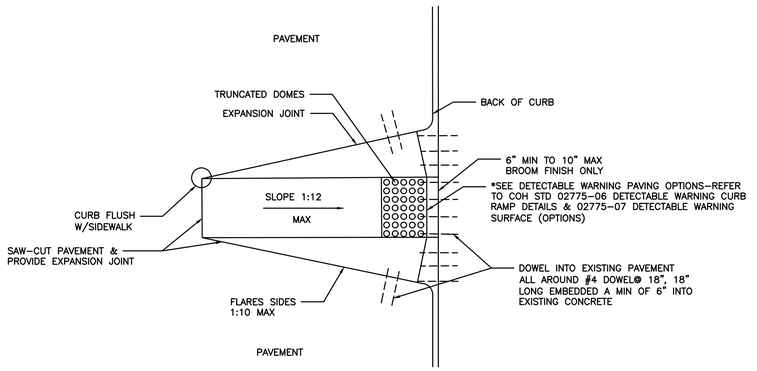

CURB RAMP CONSTRUCTION FOR EXISTING PAVEMENT

NOTES:

1. REPLACE EXISTING SIDEWALK FROM LEVEL LANDING AS NECESSARY TO ACHIEVE 1:20 SLOPE
2. BROOM FINISH IS MEASURED FROM FACE OF CURB.
3. ALL RAMPS AND SIDEWALKS/WALKWAYS SHALL BE CONSTRUCTED IN ACCORDANCE WITH HOUSTON PUBLIC WORKS STANDARDS, TEXAS ACCESSIBILITY STANDARDS (TAS) AND AMERICANS WITH DISABILITIES ACT (ADA) REQUIREMENTS. IF THERE IS A CONFLICT IN THE REQUIREMENTS, THE STRICTEST REQUIREMENTS SHALL GOVERN.
4. CURB RAMPS THAT ARE STEEPER THAN A 1:12 MAX SLOPE WILL NOT BE ACCEPTED BY THE CITY OF HOUSTON UNLESS NOTED OTHERWISE.
5. REFER TO CONTRACT DRAWINGS FOR PEDESTRIAN REALM (PR) WIDTH.
6. MINIMUM 5'x5' LANDING PAD ACCORDING TO ADA REQUIREMENTS. WHEN THE APPROACHING SIDEWALK IS WIDER THAN 5', THE LANDING PAD AND RAMP WIDTH MUST MATCH THE SIDEWALK WIDTH.
7. FOR STREETS WITH WALKABLE SURFACES IMMEDIATELY BEHIND THE CURB A FLARE IS REQUIRED ON BOTH SIDES OF THE RAMP.

APPROVED BY:	APPROVED BY:
DocuSigned by: Sulail Kanwar -6EFB8D0641F5478...	DocuSigned by: LHANG NGUYEN -95A236CFDA7584CD...
CITY ENGINEER	CITY TRAFFIC ENGINEER
APPROVED BY: DocuSigned by: Carol Haddock -ABDCA15D1E0A4E6...	
DIRECTOR OF HOUSTON PUBLIC WORKS	
EFF DATE: NOV-27-2023	DWG NO: 02775-02

CITY OF HOUSTON
HOUSTON PUBLIC WORKS STANDARD

TYPICAL CURB RAMP DETAILS

	FOR CITY OF HOUSTON USE ONLY
DRAWING SCALE	
NOT TO SCALE	

A TETRA TECH COMPANY
Texas PE Firm Reg. #F-929
575 N. Dairy Ashford, Suite 700,
Houston, Texas 77079
T +1 281 589 7257
E usinfrastructure@rpsgroup.com

SURVEYED BY: KUO Inc.
FB NO. F-4578

This document is released for the purposes of interim review only under the authority of:

Neha Raval, P.E.
Texas P.E. No. 141506
09/11/2026

It is not to be used for bidding, construction, or permitting purposes.

CITY OF HOUSTON
HOUSTON PUBLIC WORKS

LIFT STATION REHABILITATION & RECONSTRUCTION

PAVEMENT DETAILS
(SHEET 7 OF 12)
STD-C-12

WBS NUMBER	FOR CITY OF HOUSTON USE ONLY
R-000267-178A-3	
DRAWING SCALE	
AS NOTED	
CITY OF HOUSTON PM	
TAHA LOTIA	
SHEET NO. 78 OF 147	

DISCLAIMER:
THE USE OF THIS STANDARD IS GOVERNED BY THE TEXAS ENGINEERING PRACTICE ACT. THE DESIGN REQUIREMENTS ON THIS STANDARD DO NOT PURPORT TO ADDRESS ALL OF THE SAFETY CONCERNS ASSOCIATED WITH THEIR USE. IT IS THE RESPONSIBILITY OF THE DESIGN ENGINEER TO REVIEW STANDARDS AND ADOPT APPROPRIATE SAFETY REQUIREMENTS AS REQUIRED FOR EACH SITE. THE ENGINEER ADOPTS RESPONSIBILITY AND LIABILITY FOR PROJECT DESIGN AND GEOMETRICS AND AUTHORIZES THEIR USE ON PROJECTS. THE CITY OF HOUSTON ASSUMES NO RESPONSIBILITY FOR ANY WARRANTY OF ANY KIND IS MADE BY THE CITY OF HOUSTON FOR ANY PURPOSES WHATSOEVER. THE CITY OF HOUSTON ASSUMES NO RESPONSIBILITY FOR INCORRECT RESULTS OR DAMAGES RESULTING FROM ITS USE.

FILE PATH: C:\Users\andres.martinezjr\DC\ACCDocs\Tetra Tech Inc\200-317106-24001 COH LS Rehab Design\Project Files\CAD\R-000267-178A-3-STD-DETAILS (UNLOCKED).dwg 9/12/2025 5:00 PM

DISCLAIMER:
THE USE OF THIS STANDARD IS GOVERNED BY THE TEXAS ENGINEERING PRACTICE ACT. THE DESIGN REQUIREMENTS ON THIS STANDARD DO NOT PURPORT TO ADDRESS ALL OF THE SAFETY CONCERNS ASSOCIATED WITH ITS USE. THE ENGINEER OF RECORD (EOR) IS TO REVIEW THESE DESIGN REQUIREMENTS AND BY AUTHORIZING THEIR USE, ACCEPTS RESPONSIBILITY FOR THEIR APPROPRIATE, ACCURACY AND SAFETY. NO WARRANTY OF ANY KIND IS MADE BY THE CITY OF HOUSTON FOR ANY PURPOSES WHATSOEVER. THE CITY OF HOUSTON ASSUMES NO RESPONSIBILITY FOR INCORRECT RESULTS OR DAMAGES RESULTING FROM ITS USE.

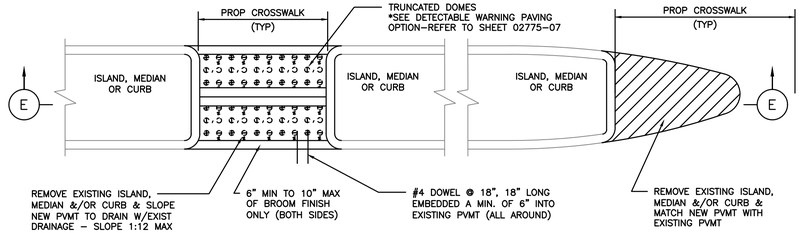

SECTION E–E
FOR ISLAND, MEDIAN, OR CURB MODIFICATIONS FOR CROSSWALKS

NOTES:

1. SEE COH STANDARD DETAIL FOR PAVEMENT MARKING DETAILS.
2. ALL RAMPS AND SIDEWALKS/WALKWAYS SHALL BE CONSTRUCTED IN ACCORDANCE WITH HOUSTON PUBLIC WORKS STANDARDS, TEXAS ACCESSIBILITY STANDARDS (TAS) AND AMERICANS WITH DISABILITIES ACT (ADA) REQUIREMENTS. IF THERE IS A CONFLICT IN THE REQUIREMENTS, THE STRICTEST REQUIREMENTS SHALL GOVERN.
3. CURB RAMPS THAT ARE STEEPER THAN A 1:12 MAX SLOPE WILL NOT BE ACCEPTED BY THE CITY OF HOUSTON.

CITY OF HOUSTON
HOUSTON PUBLIC WORKS STANDARD

CURB MODIFICATION FOR CURB RAMPS & CROSSWALKS

(SCALE: NOT TO SCALE)

APPROVED BY:

DocuSigned by: Sukul Tanwar — CITY ENGINEER
DocuSigned by: HANG NGUYEN — CITY TRAFFIC ENGINEER
DocuSigned by: Carol Haddock — DIRECTOR OF HPW

EFF DATE: NOV–27–2023 | DWG NO: 02775–04

DISCLAIMER:
THE USE OF THIS STANDARD IS GOVERNED BY THE TEXAS ENGINEERING PRACTICE ACT. THE DESIGN REQUIREMENTS ON THIS STANDARD DO NOT PURPORT TO ADDRESS ALL OF THE SAFETY CONCERNS ASSOCIATED WITH ITS USE. THE ENGINEER OF RECORD (EOR) IS TO REVIEW THESE DESIGN REQUIREMENTS AND BY AUTHORIZING THEIR USE, ACCEPTS RESPONSIBILITY FOR THEIR APPROPRIATE, ACCURACY AND SAFETY. NO WARRANTY OF ANY KIND IS MADE BY THE CITY OF HOUSTON FOR ANY PURPOSES WHATSOEVER. THE CITY OF HOUSTON ASSUMES NO RESPONSIBILITY FOR INCORRECT RESULTS OR DAMAGES RESULTING FROM ITS USE.

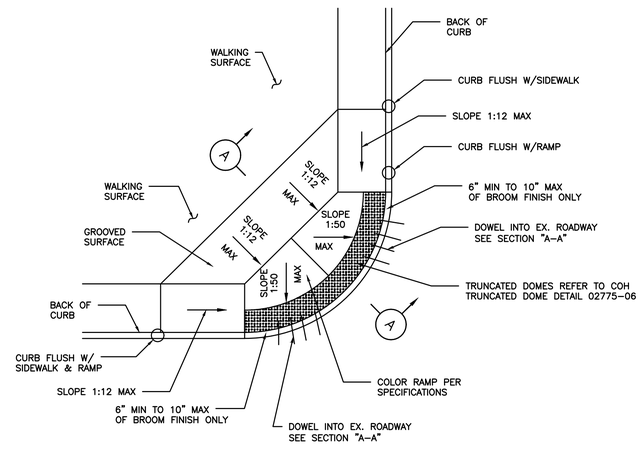

PLAN

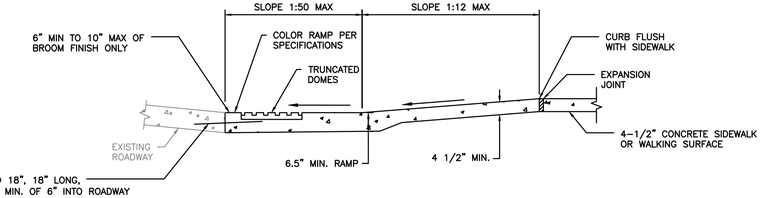

SECTION A–A

NOTES:

1. ALL RAMPS AND SIDEWALKS/WALKWAYS SHALL BE CONSTRUCTED IN ACCORDANCE WITH HOUSTON PUBLIC WORKS STANDARDS, TEXAS ACCESSIBILITY STANDARDS (TAS) AND AMERICANS WITH DISABILITIES ACT (ADA) REQUIREMENTS. IF THERE IS A CONFLICT IN THE REQUIREMENTS, THE STRICTEST REQUIREMENTS SHALL GOVERN.
2. CURB RAMPS THAT ARE STEEPER THAN A 1:12 MAX SLOPE WILL NOT BE ACCEPTED BY THE CITY OF HOUSTON.
3. THIS STANDARD DETAIL SHALL BE USED ONLY IF THE ROADWAY GEOMETRIC DOESN'T ALLOW STANDARD DETAILS 02775–02, 02775–03, AND 02775–09 TO BE USED.
4. THIS STANDARD DETAIL SHALL NOT BE USED IN LIEU OF STANDARD DETAILS 02775–02, 02775–03, AND 02775–09 UNLESS APPROVED BY THE CITY.

CITY OF HOUSTON
HOUSTON PUBLIC WORKS STANDARD

COMMERCIAL & HIGH DENSITY CONDITIONS CURB RAMP DETAILS

(SCALE: NOT TO SCALE)

APPROVED BY:

DocuSigned by: Sukul Tanwar — CITY ENGINEER
DocuSigned by: HANG NGUYEN — CITY TRAFFIC ENGINEER
DocuSigned by: Carol Haddock — DIRECTOR OF HPW

EFF DATE: NOV–27–2023 | DWG NO: 02775–05

RPS A TETRA TECH COMPANY
Texas PE Firm Reg. #F-929
575 N. Dairy Ashford, Suite 700,
Houston, Texas 77079
T +1 281 589 7257
E usinfrastructure@rpsgroup.com

SURVEYED BY: KUO Inc.
FB NO. F–4578

This document is released for the purposes of interim review only under the authority of:

Neha Raval, P.E.
Texas P.E. No. 141506
09/11/2026

It is not to be used for bidding, construction, or permitting purposes.

CITY OF HOUSTON
HOUSTON PUBLIC WORKS

LIFT STATION REHABILITATION & RECONSTRUCTION

PAVEMENT DETAILS
(SHEET 8 OF 12)
STD–C–13

WBS NUMBER	FOR CITY OF HOUSTON USE ONLY
R–000267–178A–3	
DRAWING SCALE	
AS NOTED	
CITY OF HOUSTON PM	
TAHA LOTIA	
SHEET NO. 79 OF 147	

FILE PATH: C:\Users\andres.martinezjr\DC\ACCDocs\Tetra Tech Inc\200–317106–24001 COH LS Rehab Design\Project Files\CAD\R–000267–...DETAILS (SHEET 8 OF 12).dwg 5:00 PM

DISCLAIMER:
THE USE OF THIS STANDARD IS GOVERNED BY THE TEXAS ENGINEERING PRACTICE ACT. THE DESIGN REQUIREMENTS ON THIS STANDARD DO NOT PURPORT TO ADDRESS ALL OF THE SAFETY CONCERNS ASSOCIATED WITH THEIR USE. THE ENGINEER OF RECORD (EOR) IS TO REVIEW THESE DESIGN REQUIREMENTS AND BY AUTHORIZING THEIR USE, ACCEPTS RESPONSIBILITY FOR THEIR APPLICABILITY, ADEQUACY AND SAFETY. NO WARRANTY OF ANY KIND IS MADE BY THE CITY OF HOUSTON FOR ANY PURPOSES WHATSOEVER. THE CITY OF HOUSTON ASSUMES NO RESPONSIBILITY FOR INCORRECT RESULTS OR DAMAGES RESULTING FROM ITS USE.

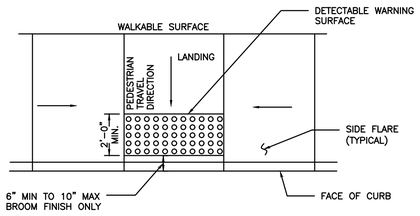

TYPICAL PLACEMENT OF DETECTABLE WARNING SURFACE ON LANDING AT STREET EDGE

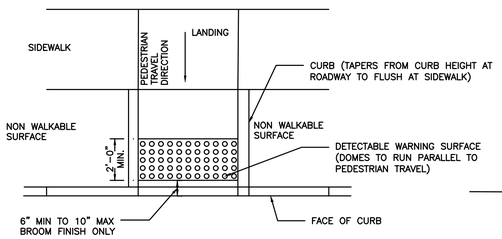

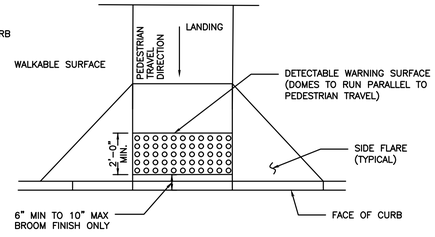

TYPICAL PLACEMENT OF DETECTABLE WARNING SURFACE ON SLOPING RAMP RUN

GENERAL NOTES FOR DETECTABLE WARNINGS:

1. DETECTABLE WARNING SURFACES MUST BE FULLY ADA COMPLIANT.
2. ALL NEW CURB RAMPS MUST CONTAIN A DETECTABLE WARNING SURFACE THAT CONSISTS OF RAISED TRUNCATED DOMES. THE SURFACE MUST CONTRAST VISUALLY WITH ADJOINING SURFACE, INCLUDING SIDE FLARES. FURNISH DARK BROWN OR DARK RED DETECTABLE WARNING SURFACE ADJACENT TO UNCOLORED CONCRETE, UNLESS SPECIFIED ELSEWHERE IN THE PLANS.
3. DETECTABLE WARNING SURFACES MUST MAINTAIN A SLIP RESISTANCE WITH FA-VALUE OF EQUAL TO OR GREATER THAN 0.8.
4. DETECTABLE WARNING SURFACES MUST MAINTAIN A WATER ABSORPTION RATE OF LESS THAN 1%, DETECTABLE WARNING SHALL NOT ALLOW WATER TO ACCUMULATE.
5. DETECTABLE WARNINGS INSTALLED INTO FRESH CONCRETE SHALL BE WITHOUT VOIDS AND UTILIZING AN ACCEPTABLE ANCHORING SYSTEM.
6. ALIGN TRUNCATED DOMES IN THE DIRECTION OF PEDESTRIAN TRAVEL WHEN ENTERING THE STREET.
7. DETECTABLE WARNING SURFACES SHALL BE A MINIMUM OF 24" IN DEPTH IN THE DIRECTION OF PEDESTRIAN TRAVEL, AND EXTEND THE FULL WIDTH OF THE CURB RAMP OR LANDING WHERE THE PEDESTRIAN ACCESS ROUTE ENTERS THE STREET.
8. DETECTABLE WARNING SURFACES SHALL BE LOCATED SO THAT THE EDGE NEAREST THE CURB LINE IS 6" MIN TO 10" MAX FROM THE DETECTABLE WARNING SURFACES MAY BE CURVED ALONG THE CORNER RADIUS.
9. ALL RAMPS AND SIDEWALKS/WALKWAYS SHALL BE CONSTRUCTED IN ACCORDANCE WITH HOUSTON PUBLIC WORKS STANDARDS, TEXAS ACCESSIBILITY STANDARDS (TAS) AND AMERICANS WITH DISABILITIES ACT (ADA) REQUIREMENTS. IF THERE IS A CONFLICT IN THE REQUIREMENTS, THE STRICTEST REQUIREMENTS SHALL GOVERN.
10. CURB RAMPS THAT ARE STEEPER THAN A 1:12 MAX SLOPE WILL NOT BE ACCEPTED BY THE CITY OF HOUSTON.

CITY OF HOUSTON
HOUSTON PUBLIC WORKS STANDARD

DETECTABLE WARNING CURB RAMP DETAILS

(SCALE: NOT TO SCALE)

APPROVED BY:

DocuSigned by: Sukut Kamwar — CITY ENGINEER
DocuSigned by: THANG NGUYEN — CITY TRAFFIC ENGINEER
DocuSigned by: Carl Haddock — DIRECTOR OF HPW

EFF DATE: NOV-27-2023 | DWG NO: 02775-06

DISCLAIMER:
THE USE OF THIS STANDARD IS GOVERNED BY THE TEXAS ENGINEERING PRACTICE ACT. THE DESIGN REQUIREMENTS ON THIS STANDARD DO NOT PURPORT TO ADDRESS ALL OF THE SAFETY CONCERNS ASSOCIATED WITH THEIR USE. THE ENGINEER OF RECORD (EOR) IS TO REVIEW THESE DESIGN REQUIREMENTS AND BY AUTHORIZING THEIR USE, ACCEPTS RESPONSIBILITY FOR THEIR APPLICABILITY, ADEQUACY AND SAFETY. NO WARRANTY OF ANY KIND IS MADE BY THE CITY OF HOUSTON FOR ANY PURPOSES WHATSOEVER. THE CITY OF HOUSTON ASSUMES NO RESPONSIBILITY FOR INCORRECT RESULTS OR DAMAGES RESULTING FROM ITS USE.

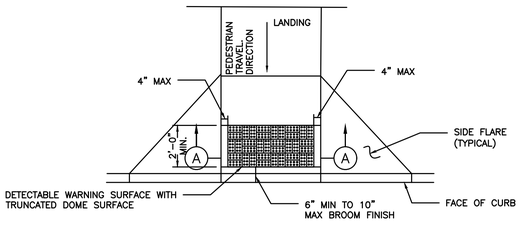

PLAN VIEW

DETECTABLE WARNING SURFACE

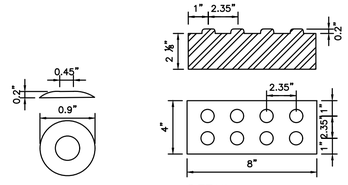

DETAIL

DETECTABLE WARNING PAVER

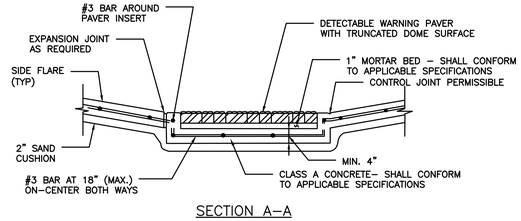

SECTION A-A

PAVER

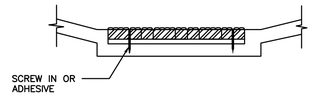

DETAIL A-5

NOTES:

GENERAL NOTES

1. ALL RAMPS AND SIDEWALKS/WALKWAYS SHALL BE CONSTRUCTED IN ACCORDANCE WITH HOUSTON PUBLIC WORKS STANDARDS, TEXAS ACCESSIBILITY STANDARDS (TAS) AND AMERICANS WITH DISABILITIES ACT (ADA) REQUIREMENTS. IF THERE IS A CONFLICT IN THE REQUIREMENTS, THE STRICTEST REQUIREMENTS SHALL GOVERN.
2. CURB RAMPS THAT ARE STEEPER THAN A 1:12 MAX SLOPE WILL NOT BE ACCEPTED BY THE CITY OF HOUSTON.

PAVERS

1. FURNISH DETECTABLE WARNING SURFACE UNITS MEETING ALL REQUIREMENTS OF ASTM C-936, C-33. LAY IN A TWO BY TWO UNIT BASKET WEAVE PATTERN OR AS DIRECTED.
2. LAY FULL-SIZE UNITS FIRST FOLLOWED BY CLOSURE UNITS CONSISTING OF AT LEAST 25 PERCENT OF A FULL UNIT. CUT DETECTABLE WARNING POWER UNITS USING A POWER SAW.

POLYMER CONCRETE

1. DETECTABLE WARNING TILES SHALL BE MADE OF POLYMER CONCRETE MATERIALS.
2. DETECTABLE WARNING TILES SHALL BE INSTALLED INTO FRESH CONCRETE (CAST-IN-PLACE) UTILIZING AN ANCHORING SYSTEM.
3. DETECTABLE WARNING TILES SHALL BE OF TERRACOTTA (BRICK-RED) COLOR AND COLORED THROUGHOUT TO GUARANTEE THE ADA REQUIRED COLOR CONTRAST.
4. DETECTABLE WARNING TILES SHALL MEET OR EXCEED THE FOLLOWING ASTM-BASED "STANDARDS" FOR CONCRETE MATERIALS.
   A. COMPRESSION STRENGTH > 12,500 PSI PER ASTM C 39-04
   B. WATER ABSORPTION < 0.25% PER ASTM C 97-09

PADS

1. FURNISH REQUIREMENTS OF ADAAG (MARCH 2003).
2. OTHER MATERIALS MAY BE USED IF APPROVED BY THE CITY ENGINEER

CITY OF HOUSTON
HOUSTON PUBLIC WORKS STANDARD

DETECTABLE WARNING SURFACE (OPTIONS)

(SCALE: NOT TO SCALE)

APPROVED BY:

DocuSigned by: Sukut Kamwar — CITY ENGINEER
DocuSigned by: THANG NGUYEN — CITY TRAFFIC ENGINEER
DocuSigned by: Carl Haddock — DIRECTOR OF HPW

EFF DATE: NOV-27-2023 | DWG NO: 02775-07

A TETRA TECH COMPANY
Texas PE Firm Reg. #F-929
575 N. Dairy Ashford, Suite 700,
Houston, Texas 77079
T +1 281 589 7257
E usinfrastructure@rpsgroup.com

SURVEYED BY: KUO Inc.
FB NO. F-4578

This document is released for the purposes of interim review only under the authority of:

Neha Raval, P.E.
Texas P.E. No. 141506
09/11/2026

It is not to be used for bidding, construction, or permitting purposes.

CITY OF HOUSTON
HOUSTON PUBLIC WORKS

LIFT STATION REHABILITATION & RECONSTRUCTION

PAVEMENT DETAILS
(SHEET 9 OF 12)
STD-C-14

WBS NUMBER	FOR CITY OF HOUSTON USE ONLY
R-000267-178A-3	
DRAWING SCALE	
AS NOTED	
CITY OF HOUSTON PM	
TAHA LOTIA	
SHEET NO. 80 OF 147	

FILE PATH: C:\Users\andres.martinezjr\DC\ACCDocs\Tetra Tech Inc\200-317106-24001 COH LS Rehab Design\Project Files\CAD\R-000267-178A-3_PAVEMENT DETAILS (SHEET 9 OF 12).dgn
PLOTTED: 09/12/2026 5:00 PM

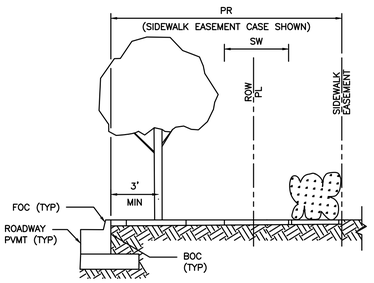

ELEVATION

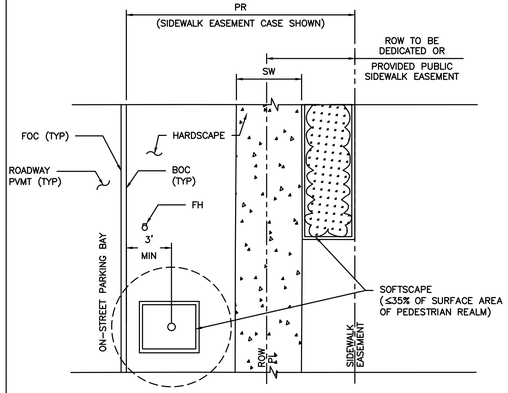

PLAN

PEDESTRIAN REALM PERFORMANCE STANDARD

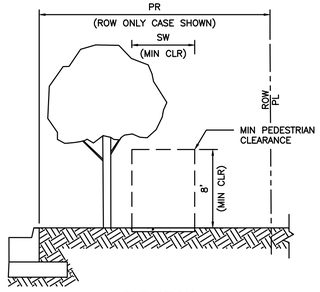

ELEVATION

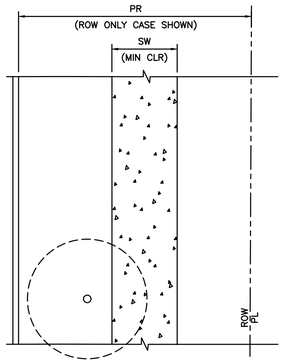

PLAN

SIDEWALK & CLEAR PEDESTRIAN ZONE

MANDATORY MINIMUM REQUIREMENT

NOTES

1. REFER TO CONTRACT DRAWINGS FOR PEDESTRIAN REALM (PR), AND SIDEWALK (SW) WIDTHS.
2. THE MINIMUM UNOBSTRUCTED VERTICAL CLEARANCE OF A SIDEWALK IS EIGHT (8) FEET AS MEASURED VERTICALLY FROM THE SURFACE OF THE SIDEWALK. FOR VERTICAL CLEARANCE TO IMPROVEMENTS CONSTRUCTED OVER A SIDEWALK WITHIN THE PEDESTRIAN REALM, REFER TO THE CONTRACT DRAWINGS.
3. FOR PEDESTRIAN REALM DESIGN BACKGROUND, REFER TO CHAPTER 42 OF THE CODE OF ORDINANCES, ARTICLE IV – ENHANCED PEDESTRIAN REALM STANDARDS AND THE USERS' GUIDE FOR WALKABLE PLACES AND TRANSIT–ORIENTED DEVELOPMENT.
4. FOR ADDITIONAL PLANTING REQUIREMENTS, REFER TO CHAPTER 33 OF THE CODE OF ORDINANCES, SECTION 129 – GENERAL PLANTING STANDARDS.

CITY OF HOUSTON
HOUSTON PUBLIC WORKS STANDARD

SIDEWALK AND CLEAR ZONE
TRANSIT CORRIDOR STREET

(SCALE: NOT TO SCALE)

APPROVED BY:

DocuSigned by: Sukut Kanwar — CITY ENGINEER
DocuSigned by: Carl Haddock — DIRECTOR OF HPW
DocuSigned by: KHANG NGUYEN — CITY TRAFFIC ENGINEER

EFF DATE: NOV–27–2023 | DWG NO: 02775–08

DISCLAIMER:
THE USE OF THIS STANDARD IS GOVERNED BY THE TEXAS ENGINEERING PRACTICE ACT. THE JURISDICTIONAL REQUIREMENTS ON THIS STANDARD DO NOT PURPORT TO ADDRESS ALL OF THE SAFETY CONCERNS ASSOCIATED WITH THEIR USE. THE ENGINEER OF RECORD (EOR) IS TO REVIEW THESE JURISDICTIONAL REQUIREMENTS AND BY AUTHORIZING THEIR USE, ACCEPTS RESPONSIBILITY FOR THEIR APPLICABILITY, ADEQUACY AND SAFETY. NO WARRANTY OF ANY KIND IS MADE BY THE CITY OF HOUSTON FOR ANY PURPOSES WHATSOEVER. THE CITY OF HOUSTON ASSUMES NO RESPONSIBILITY FOR INCORRECT RESULTS OR DAMAGES RESULTING FROM ITS USE.

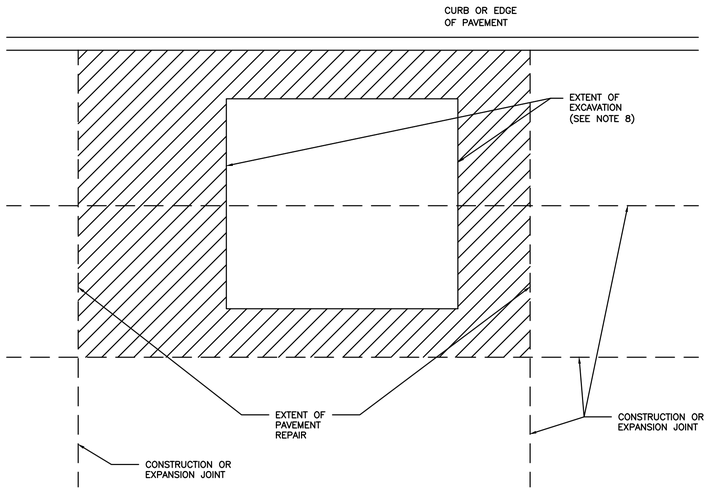

NOTES:

1. EXTENT OF PAVEMENT REPAIR SHALL BE PERPENDICULAR AND PARALLEL TO TRAVEL WAY.
2. REPLACE ENTIRE PANEL WIDTH AND LENGTH TO NEAREST CONSTRUCTION OR EXPANSION JOINT BEYOND EDGE OF EXCAVATION.
3. SAW CUT AND EXPOSE 15" OF REINFORCING STEEL WITHIN EXISTING PAVEMENT. PROVIDE HORIZONTAL DOWELS (PER SPECIFICATION SECTION 02951–PAVEMENT REPAIR AND RESTORATION) IF EXISTING REINFORCING IS BROKEN OFF.
4. REPLACE CURB WHEN ADJACENT LANE IS REPLACED.
5. MAINTAIN EXPANSION JOINTS AT EXISTING LOCATIONS UNLESS OTHERWISE DIRECTED BY CITY ENGINEER.
6. SPECIALTY PAVEMENTS (IE: BRICK PAVERS) TO BE REPLACED WITH MATCHING PAVEMENT IN ALL CASES.
7. REPLACE PAVEMENT MARKINGS IN ACCORDANCE WITH CITY OF HOUSTON STANDARD SPECIFICATIONS 02764–RAISED PAVEMENT MARKERS AND 02767–THERMOPLASTIC PAVEMENT MARKINGS.
8. EXTENT OF EXCAVATION INCLUDES 18" OVERCUT AS SHOWN ON STANDARD DETAIL 02951–04 PAVEMENT REPAIR DETAIL FOR STREET CUTS (FLEX–BASE PAVEMENT & CONCRETE PAVEMENT).

CITY OF HOUSTON
HOUSTON PUBLIC WORKS STANDARD

STREET CUT FOR CONCRETE PAVEMENT REPLACEMENT/RESTORATION AGE OF PAVEMENT ≤ 5YRS
(SCALE: NOT TO SCALE)

APPROVED BY:

DocuSigned by: Sukut Kanwar — CITY ENGINEER
DocuSigned by: Carl Haddock — DIRECTOR OF HPW
DocuSigned by: KHANG NGUYEN — CITY TRAFFIC ENGINEER

EFF DATE: NOV–27–2023 | DWG NO: 02951–01

DISCLAIMER:
THE USE OF THIS STANDARD IS GOVERNED BY THE TEXAS ENGINEERING PRACTICE ACT. THE JURISDICTIONAL REQUIREMENTS ON THIS STANDARD DO NOT PURPORT TO ADDRESS ALL OF THE SAFETY CONCERNS ASSOCIATED WITH THEIR USE. THE ENGINEER OF RECORD (EOR) IS TO REVIEW THESE JURISDICTIONAL REQUIREMENTS AND BY AUTHORIZING THEIR USE, ACCEPTS RESPONSIBILITY FOR THEIR APPLICABILITY, ADEQUACY AND SAFETY. NO WARRANTY OF ANY KIND IS MADE BY THE CITY OF HOUSTON FOR ANY PURPOSES WHATSOEVER. THE CITY OF HOUSTON ASSUMES NO RESPONSIBILITY FOR INCORRECT RESULTS OR DAMAGES RESULTING FROM ITS USE.

NOTES:

1. EXTENTS OF PAVEMENT REMOVAL SHALL BE IN 20' INCREMENTS FROM JOINT TO JOINT.
2. EXTENTS OF SUBGRADE REMOVAL SHALL BE IN 20' INCREMENTS FROM JOINT TO JOINT.

RPS A TETRA TECH COMPANY
Texas PE Firm Reg. #F-929
575 N. Dairy Ashford, Suite 700,
Houston, Texas 77079
T +1 281 589 7257
E usinfrastructure@rpsgroup.com

SURVEYED BY: KUO Inc.
FB NO. F–4578

This document is released for the purposes of interim review only under the authority of:

Neha Raval, P.E.
Texas P.E. No. 141506
09/11/2026

It is not to be used for bidding, construction, or permitting purposes.

CITY OF HOUSTON
HOUSTON PUBLIC WORKS

LIFT STATION REHABILITATION & RECONSTRUCTION

PAVEMENT DETAILS
(SHEET 10 OF 12)
STD–C–15

WBS NUMBER	FOR CITY OF HOUSTON USE ONLY
R–000267–178A–3	
DRAWING SCALE	
AS NOTED	
CITY OF HOUSTON PM	
TAHA LOTIA	
SHEET NO. 81 OF 147	

FILE PATH: C:\Users\andres.martinezjr\DC\ACCDocs\Tetra Tech Inc\200–317106–24001 COH LS Rehab Design\Project Files\CAD\R–000267–01CDA–STYLE Files\PAVEMENT DETAILS (SHEET 10 OF 12).dgn | PLOTTED: 09/12/2026 5:00 PM

DISCLAIMER:
THE USE OF THIS STANDARD IS GOVERNED BY THE TEXAS ENGINEERING PRACTICE ACT. THE DESIGN REQUIREMENTS ON THIS STANDARD DO NOT PURPORT TO ADDRESS ALL OF THE SAFETY CONCERNS ASSOCIATED WITH THEIR USE. THE ENGINEER OF RECORD (EOR) IS TO REVIEW THESE DESIGN REQUIREMENTS AND BY AUTHORIZING THEIR USE ACCEPTS RESPONSIBILITY FOR THESE APPLICABLITY, ADEQUACY AND SAFETY. NO WARRANTY OF ANY KIND IS MADE BY THE CITY OF HOUSTON FOR ANY PURPOSES WHATSOEVER. THE CITY OF HOUSTON ASSUMES NO RESPONSIBILITY FOR INCORRECT RESULTS OR DAMAGES RESULTING FROM ITS USE.

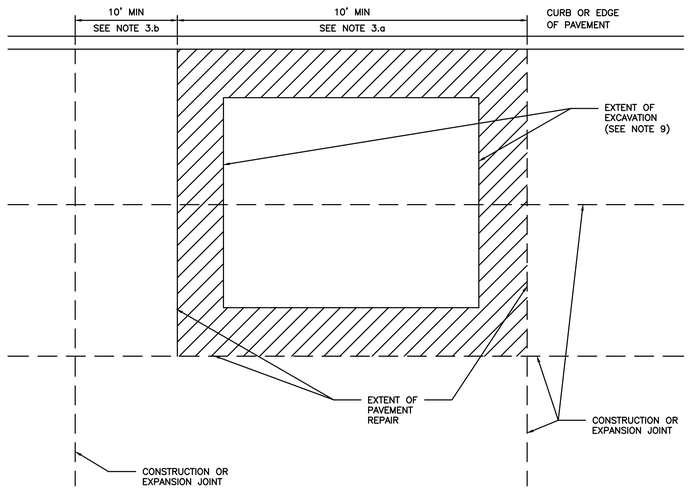

NOTES:

1. EXTENT OF PAVEMENT REPAIR SHALL BE PERPENDICULAR AND PARALLEL TO TRAVEL WAY.
2. WIDTH:
   REPLACE PANEL WIDTH TO NEAREST CONSTRUCTION OR EXPANSION JOINT BEYOND EDGE OF EXCAVATION.
3. LENGTH:
   a. MINIMUM LENGTH OF PAVEMENT REPAIR ALONG TRAVEL WAY IS 10' FROM THE NEAREST JOINT.
   b. IF EXTENT OF PAVEMENT REPAIR IS LESS THAN 10' FROM EXISTING CONSTRUCTION OR EXPANSION JOINT, EXTEND PAVEMENT REPAIR TO EXISTING JOINT.
4. SAW CUT AND EXPOSE 15" OF REINFORCING STEEL AROUND EDGE OF PANEL REPLACEMENT. PROVIDE HORIZONTAL DOWELS (PER SPECIFICATION SECTION 02951–PAVEMENT REPAIR AND RESTORATION) IF REINFORCING IS BROKEN OFF OR DOES NOT EXIST.
5. REPLACE CURB WHEN ADJACENT LANE IS REPLACED.
6. MAINTAIN EXPANSION JOINTS AT EXISTING LOCATIONS UNLESS OTHERWISE DIRECTED BY CITY ENGINEER.
7. SPECIALTY PAVEMENTS (IE: BRICK PAVERS) TO BE REPLACED WITH MATCHING PAVEMENT IN ALL CASES.
8. REPLACE PAVEMENT MARKINGS IN ACCORDANCE WITH CITY OF HOUSTON STANDARD SPECIFICATIONS 02764–RAISED PAVEMENT MARKERS AND 02767–THERMOPLASTIC PAVEMENT MARKINGS.
9. EXTENT OF EXCAVATION INCLUDES 18" OVERCUT AS SHOWN ON STANDARD DETAIL 02951–04 PAVEMENT REPAIR DETAIL FOR STREET CUTS (FLEX–BASE PAVEMENT & CONCRETE PAVEMENT).

CITY OF HOUSTON
HOUSTON PUBLIC WORKS STANDARD

STREET CUT FOR CONCRETE PAVEMENT REPLACEMENT/RESTORATION AGE OF PAVEMENT > 5YRS
(SCALE: NOT TO SCALE)

APPROVED BY:

DocuSigned by: Sulaf Kanawi — CITY ENGINEER
DocuSigned by: KHING NGUYEN — CITY TRAFFIC ENGINEER
DocuSigned by: Carl Haddock — DIRECTOR OF HPW

EFF DATE: NOV–27–2023 | DWG NO: 02951–02

DISCLAIMER:
THE USE OF THIS STANDARD IS GOVERNED BY THE TEXAS ENGINEERING PRACTICE ACT. THE DESIGN REQUIREMENTS ON THIS STANDARD DO NOT PURPORT TO ADDRESS ALL OF THE SAFETY CONCERNS ASSOCIATED WITH THEIR USE. THE ENGINEER OF RECORD (EOR) IS TO REVIEW THESE DESIGN REQUIREMENTS AND BY AUTHORIZING THEIR USE ACCEPTS RESPONSIBILITY FOR THESE APPLICABLITY, ADEQUACY AND SAFETY. NO WARRANTY OF ANY KIND IS MADE BY THE CITY OF HOUSTON FOR ANY PURPOSES WHATSOEVER. THE CITY OF HOUSTON ASSUMES NO RESPONSIBILITY FOR INCORRECT RESULTS OR DAMAGES RESULTING FROM ITS USE.

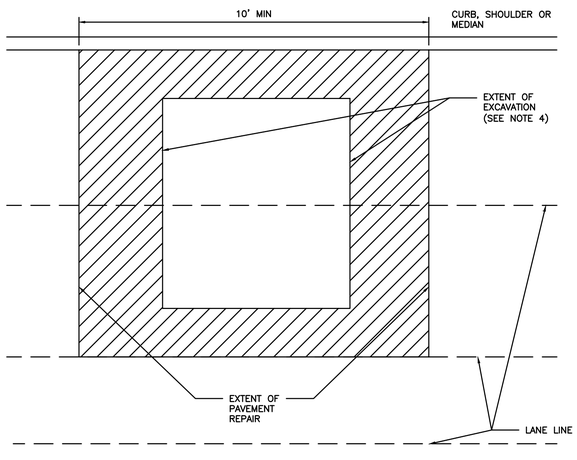

NOTES:

1. EXTENT OF PAVEMENT REPAIR SHALL BE PERPENDICULAR AND PARALLEL TO TRAVEL WAY.
2. FLEXIBLE BASE: REPLACE BASE TO SAME THICKNESS PLUS TWO INCHES (2") FOR EXTENT OF EXCAVATION. USE APPROVED BASE MATERIAL TYPE.*
3. SURFACE COURSE:
   3.1. WIDTH:
   SURFACE MILL AND OVERLAY FULL WIDTH OF LANE(S) TO NEAREST LANE DIVIDER BEYOND EDGE OF EXCAVATION.
   3.2. LENGTH:
   MINIMUM LENGTH OF SURFACE MILL ALONG TRAVEL WAY IS 10'.
   3.3. REPLACE PAVEMENT MARKINGS IN ACCORDANCE WITH CITY OF HOUSTON STANDARD SPECIFICATIONS 02764–RAISED PAVEMENT MARKERS AND 02767–THERMOPLASTIC PAVEMENT MARKINGS.
4. EXTENT OF EXCAVATION INCLUDES 18" OVER CUT AS SHOWN ON STANDARD DETAIL 02951–04 PAVEMENT REPAIR DETAIL FOR STREET CUTS (FLEX–BASE PAVEMENT AND CONCRETE PAVEMENT).
5. ADDITIONAL REQUIREMENTS FOR ASPHALT OVERLAY ON CONCRETE PAVEMENT:
   5.1. REPLACE CONCRETE FOR EXTENT OF EXCAVATION. REPLACE TO SAME THICKNESS PLUS TWO INCHES (2").
   5.2. WIDTH:
   5.2.1. IF EXCAVATION EXTENDS MORE THAN HALF OF A LANE, REPLACE ENTIRE LANE OF CONCRETE. OTHERWISE USE STANDARD DETAIL 02951–04 THROUGH 05.
   5.3. SAW CUT AND EXPOSE 15" OF REINFORCING STEEL AROUND EDGE OF CONCRETE REPLACEMENT. IF NO REINFORCING STEEL EXISTS, USE HORIZONTAL DOWELS PER CITY OF HOUSTON STANDARD SPECIFICATION SECTION 02951–PAVEMENT REPAIR AND RESTORATION.
   5.4. REPLACE CURB WHEN ADJACENT LANE IS REPLACED.
   5.5. MAINTAIN CONCRETE EXPANSION JOINTS AT EXISTING LOCATIONS UNLESS OTHERWISE APPROVED BY CITY ENGINEER.

CITY OF HOUSTON
HOUSTON PUBLIC WORKS STANDARD

STREET CUT FOR ASPHALT PAVEMENT REPLACEMENT/RESTORATION FOR PAVEMENT OF ALL AGES
(SCALE: NOT TO SCALE)

APPROVED BY:

DocuSigned by: Sulaf Kanawi — CITY ENGINEER
DocuSigned by: KHING NGUYEN — CITY TRAFFIC ENGINEER
DocuSigned by: Carl Haddock — DIRECTOR OF HPW

EFF DATE: NOV–27–2023 | DWG NO: 02951–03

NOTES:

1. EXTENTS OF PAVEMENT REMOVAL SHALL BE IN 20' INCREMENTS FROM JOINT TO JOINT.
2. EXTENTS OF SUBGRADE REMOVAL SHALL BE IN 20' INCREMENTS FROM JOINT TO JOINT.

TPS A TETRA TECH COMPANY
Texas PE Firm Reg. #F-929
575 N. Dairy Ashford, Suite 700,
Houston, Texas 77079
T +1 281 589 7257
E usinfrastructure@rpsgroup.com

SURVEYED BY: KUO Inc.
FB NO. F–4578

This document is released for the purposes of interim review only under the authority of:

Neha Raval, P.E.
Texas P.E. No. 141506
09/11/2026

It is not to be used for bidding, construction, or permitting purposes.

CITY OF HOUSTON
HOUSTON PUBLIC WORKS

LIFT STATION REHABILITATION & RECONSTRUCTION

PAVEMENT DETAILS
(SHEET 11 OF 12)
STD–C–16

WBS NUMBER	FOR CITY OF HOUSTON USE ONLY
R–000267–178A–3	
DRAWING SCALE	
AS NOTED	
CITY OF HOUSTON PM	
TAHA LOTIA	
SHEET NO. 82 OF 147	

FILE PATH: C:\Users\andres.martinezjr\DC\ACCDocs\Tetra Tech Inc\200-317106-24001 COH LS Rehab Design\Project Files\CAD\R-000267-178A-3_PAVEMENT DETAILS (SHEET 11 OF 12).dgn
PLOTTED: 09/12/2026 5:00 PM

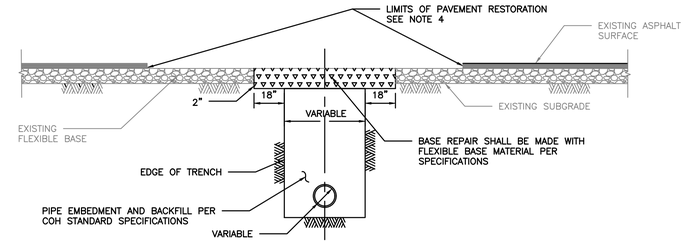

ELEVATION A
REPAIR OF FLEXIBLE BASE PAVEMENT

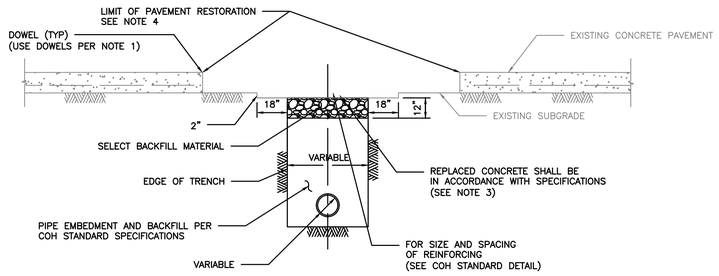

ELEVATION B
REPAIR OF REINFORCED CONCRETE PAVEMENT

NOTES:

1. EXPOSE 15" OF REINFORCING STEEL AT PROPOSED SAWED JOINT. IF NO REINFORCING STEEL EXISTS, USE HORIZONTAL DOWELS. HORIZONTAL DOWELS SHALL BE #6 BAR, 24" LONG, 24" C-C, DRILLED AND EMBEDDED 8" INTO THE CENTER OF THE EXISTING SLAB. WITH "PO ROC" OR EQUAL.
2. IF REINFORCED CONCRETE IS OVERLAYED WITH ASPHALT, REPLACE WITH 2" MIN HMAC SURFACING.
3. REFER TO STANDARD DETAIL 02751-01 FOR REINFORCING STEEL REQUIREMENTS.
4. REFER TO STANDARD DETAIL 02951-01 THROUGH 03 FOR PAVEMENT RESTORATION LIMITS.

CITY OF HOUSTON
HOUSTON PUBLIC WORKS STANDARD

PAVEMENT REPAIR DETAIL
FOR STREET CUTS
(FLEX-BASE PAVEMENT & CONCRETE PAVEMENT)
(SCALE: NOT TO SCALE)

APPROVED BY:

DocuSigned by: Sulail Kanwar — CITY ENGINEER
DocuSigned by: LHANG NGUYEN — CITY TRAFFIC ENGINEER
DocuSigned by: Carl Haddock — DIRECTOR OF HPW

EFF DATE: NOV-27-2023 | DWG NO: 02951-04

DISCLAIMER:
THE USE OF THIS STANDARD IS GOVERNED BY THE TEXAS ENGINEERING PRACTICE ACT. THE DESIGN REQUIREMENTS ON THIS STANDARD DO NOT PURPORT TO ADDRESS ALL OF THE SAFETY CONCERNS ASSOCIATED WITH THEIR USE. THE ENGINEER OF RECORD (EOR) IS TO REVIEW THESE DESIGN REQUIREMENTS AND BY AUTHORIZING THEIR USE ACCEPTS RESPONSIBILITY FOR THE SAFETY CONCERNS THAT MAY ARISE. NEITHER THE CITY OF HOUSTON NOR ANY OF ITS AGENTS MAKE ANY WARRANTY, EXPRESS OR IMPLIED, AS TO THE DESIGN INDICATED HEREON AND ASSUME NO LIABILITY FOR ANY PURPOSES WHATSOEVER. THE CITY OF HOUSTON ASSUMES NO RESPONSIBILITY FOR INCORRECT RESULTS OR DAMAGES RESULTING FROM ITS USE.

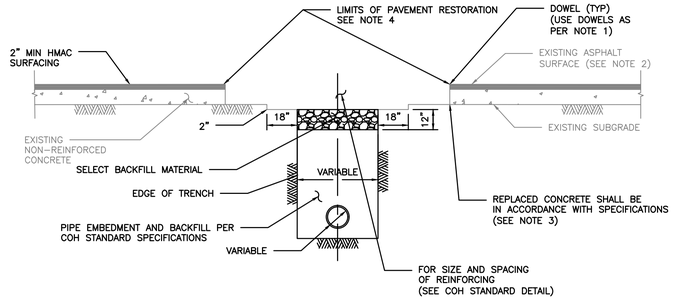

ELEVATION C
REPAIR OF NON-REINFORCED CONCRETE PAVEMENT

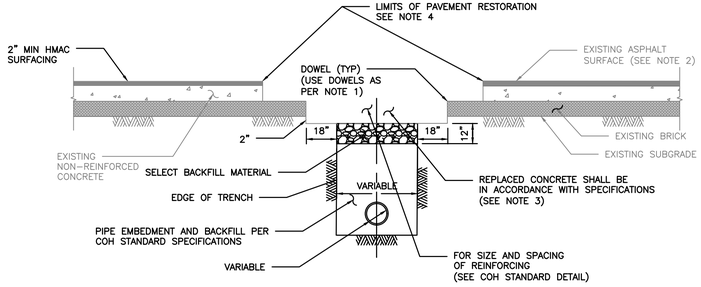

ELEVATION D
REPAIR OF NON-REINFORCED CONCRETE PAVEMENT WITH BRICK

NOTES:

1. EXPOSE 15" OF REINFORCING STEEL AT PROPOSED SAWED JOINT. IF NO REINFORCING STEEL EXISTS, USE HORIZONTAL DOWELS. HORIZONTAL DOWELS SHALL BE #6 BAR, 24" LONG, 24" C-C, DRILLED AND EMBEDDED 8" INTO THE CENTER OF THE EXISTING SLAB. WITH "PO ROC" OR EQUAL.
2. IF REINFORCED CONCRETE IS OVERLAYED REPLACE WITH SAME THICKNESS OF HMAC SURFACING.
3. REFER TO STANDARD DETAIL 02751-01 FOR REINFORCING STEEL REQUIREMENT
4. REFER TO STANDARD DETAILS 02951-01 THROUGH 03 FOR PAVEMENT RESTORATION LIMITS.

CITY OF HOUSTON
HOUSTON PUBLIC WORKS STANDARD

PAVEMENT REPAIR DETAIL
FOR STREET CUTS
(NON-REINFORCED CONCRETE & BRICK PAVEMENT)
(SCALE: NOT TO SCALE)

APPROVED BY:

DocuSigned by: Sulail Kanwar — CITY ENGINEER
DocuSigned by: LHANG NGUYEN — CITY TRAFFIC ENGINEER
DocuSigned by: Carl Haddock — DIRECTOR OF HPW

EFF DATE: NOV-27-2023 | DWG NO: 02951-05

DISCLAIMER:
THE USE OF THIS STANDARD IS GOVERNED BY THE TEXAS ENGINEERING PRACTICE ACT. THE DESIGN REQUIREMENTS ON THIS STANDARD DO NOT PURPORT TO ADDRESS ALL OF THE SAFETY CONCERNS ASSOCIATED WITH THEIR USE. THE ENGINEER OF RECORD (EOR) IS TO REVIEW THESE DESIGN REQUIREMENTS AND BY AUTHORIZING THEIR USE ACCEPTS RESPONSIBILITY FOR THE SAFETY CONCERNS THAT MAY ARISE. NEITHER THE CITY OF HOUSTON NOR ANY OF ITS AGENTS MAKE ANY WARRANTY, EXPRESS OR IMPLIED, AS TO THE DESIGN INDICATED HEREON AND ASSUME NO LIABILITY FOR ANY PURPOSES WHATSOEVER. THE CITY OF HOUSTON ASSUMES NO RESPONSIBILITY FOR INCORRECT RESULTS OR DAMAGES RESULTING FROM ITS USE.

TETRA TECH
Texas PE Firm Reg. #F-929
575 N. Dairy Ashford, Suite 700,
Houston, Texas 77079
T +1 281 589 7257
E usinfrastructure@rpsgroup.com

SURVEYED BY: KUO Inc.
FB NO. F-4578

This document is released for the purposes of interim review only under the authority of:

Neha Raval, P.E.
Texas P.E. No. 141506
09/11/2026

It is not to be used for bidding, construction, or permitting purposes.

CITY OF HOUSTON
HOUSTON PUBLIC WORKS

LIFT STATION REHABILITATION & RECONSTRUCTION

PAVEMENT DETAILS
(SHEET 12 OF 12)
STD-C-17

WBS NUMBER	FOR CITY OF HOUSTON USE ONLY
R-000267-178A-3	
DRAWING SCALE	
AS NOTED	
CITY OF HOUSTON PM	
TAHA LOTIA	
SHEET NO. 83 OF 147	

FILE PATH: C:\Users\andres.martinezjr\DC\ACCDocs\Tetra Tech Inc\200-317106-24001 COH LS Rehab Design\Project Files\CAD\R-000267-178A-3_STD_C-17_PAVEMENT DETAILS (SHEET 12 OF 12).dgn 9/9/2026 5:00 PM

FILE PATH: C:\Users\andres.martinezjr\DC\ACCDocs\Tetra Tech Inc\200-317106-24001 COH LS Rehab Design\Project Files\CAD\R-000267-01\DGN\R-000267-01DGN-STYLEBASE.dgn DETAILS PLOTTED: 29/09/2026 05:01 PM

NOTES:

1. DEPTH OF MANHOLE DETERMINES SECTIONS REQUIRED.
2. PRECAST CONCRETE RINGS SHALL BE PROVIDED FOR A COMBINED ADJUSTMENT HEIGHT OF AT LEAST 12". THE TOTAL HEIGHT OF THE ADJUSTMENT RINGS SHALL NOT EXCEED 1'-8".
3. MANHOLE WALL THICKNESS FOR DEPTH EXCEEDING 12'-0" SHALL BE DETERMINED TO MEET LOADING CONDITIONS. MIN THICKNESS 5".
4. MANHOLE DROP AND INTERSECTING PIPES SHALL BE INSTALLED ONLY WHEN CALLED FOR IN PLAN AND PROFILE DRAWING.
5. SEAT MANHOLE FRAME IN SEALANT PER COH STANDARD SPECIFICATION.
6. ECCENTRIC PRECAST CONCRETE MANHOLE MAY BE USED.
7. OMIT CEMENT MORTAR WHEN MANHOLE IS LOCATED IN PAVED AREAS.
8. MIN REINFORCING IN THE PRECAST CONCRETE BASE SHALL BE # 5 @ 8 EW.

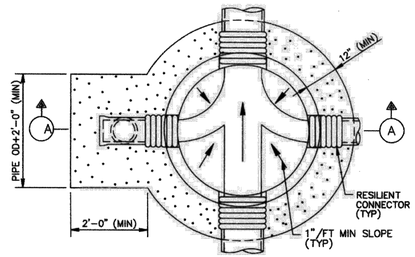

FOUNDATION PLAN

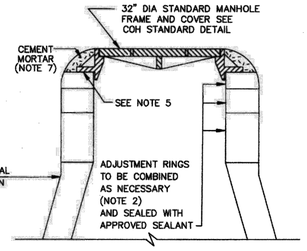

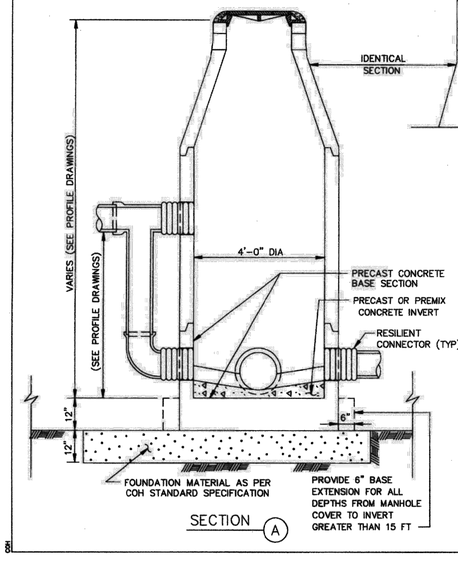

SECTION (A)

CITY OF HOUSTON	
DEPARTMENT OF PUBLIC WORKS AND ENGINEERING	
SANITARY SEWER 4'-0" DIAMETER PRECAST CONCRETE MANHOLE (NOT TO SCALE)	
APPROVED BY: CITY ENGINEER	APPROVED BY: DIRECTOR OF PUBLIC WORKS AND ENGINEERING
EFF DATE: JULY-01-2010	DWG NO: 02082-02

NOTES ON USE OF STANDARD DETAIL 02082-02

NOTES TO SPECIFIER:

1. *"–" INDICATES THAT A SPECIAL DESIGN OR THE NEXT LARGER MANHOLE SIZE SHALL BE USED.*
2. *TABLE 1 IS BASED ON A MIN SEPARATION DISTANCE "S" OF 15.5" OR INTERSECTION PIPE OD/2, WHICHEVER IS GREATER, BETWEEN MAIN AND INTERSECTING PIPES ALONG THE MANHOLE INSIDE WALL ARC.*
3. *PIPE WALL THICKNESS USED IN TABLE 1 ARE BASED ON RCP. THE DESIGN ENGINEER MAY CALCULATE TO SEE IF THINNER WALL PIPES CAN MEET THE SEPARATION CRITERIA FOR ANGLES SMALLER THAN THE TABLE ALLOWS.*

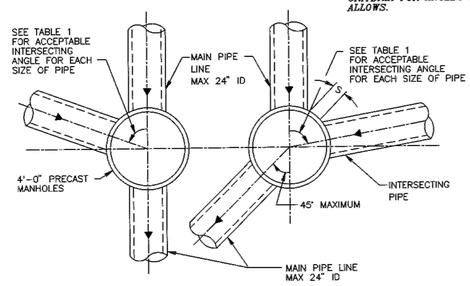

MAX 24" ID MAIN PIPE ALLOWED FOR STRAIGHT THROUGH TO 45° DEFLECTION

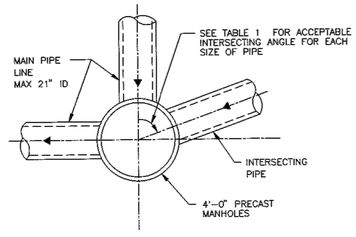

MAX 21" ID MAIN PIPE ALLOWED FOR 45° TO 90° DEFLECTION

TABLE 1

MIN ANGLE AND INTERSECTING PIPE SIZES FOR A 4'-0" DIA MANHOLE

INTERSECTING PIPE SIZE (INCHES)	MIN INTERSECTING ANGLE IN DEGREES FOR FOR VARIOUS MAIN PIPE SIZES IN INCHES							
	6"	8"	10"	12"	15"	18"	21"	24"
6	55	58	60	65	70	75	80	85
8		60	63	68	73	77	82	87
10			66	71	75	80	85	90
12				76	80	85	90	–
15					85	90	–	–
18						–	–	–
21							–	–
24								–

NOT APPLICABLE UNLESS HYDRAULICS DICTATE (INTERSECTING PIPE > MAIN PIPE)

CITY OF HOUSTON	
DEPARTMENT OF PUBLIC WORKS AND ENGINEERING ENGINEERING, CONSTRUCTION AND REAL ESTATE DIVISION	
SANITARY SEWER 4'-0" DIAMETER PRECAST CONCRETE MANHOLE NOTES (NOT TO SCALE)	
APPROVED BY: CITY ENGINEER	APPROVED BY: DIRECTOR OF PUBLIC WORKS AND ENGINEERING
EFF DATE: OCT-01-2002	DWG NO: 02082N-02

RPS
A TETRA TECH COMPANY
Texas PE Firm Reg. #F-929
575 N. Dairy Ashford, Suite 700,
Houston, Texas 77079
T +1 281 589 7257
E usinfrastructure@rpsgroup.com

SURVEYED BY: KUO Inc.
FB NO. F-4578

This document is released for the purposes of interim review only under the authority of:

Neha Raval, P.E.
Texas P.E. No. 141506
09/11/2026

It is not to be used for bidding, construction, or permitting purposes.

CITY OF HOUSTON
HOUSTON PUBLIC WORKS

LIFT STATION REHABILITATION & RECONSTRUCTION

WASTEWATER DETAILS
(SHEET 1 OF 6)
STD-C-18

WBS NUMBER	FOR CITY OF HOUSTON USE ONLY
R-000267-178A-3	
DRAWING SCALE	
AS NOTED	
CITY OF HOUSTON PM	
TAHA LOTIA	
SHEET NO. 84 OF 147	

FILE PATH: C:\Users\andres.martinezjr\DC\ACCDocs\Tetra Tech Inc\200-317106-24001 COH LS Rehab Design\Project Files\CAD\R-000267-0[illegible]DETAILS PLOTTED: 29/09/2026 05:01 PM

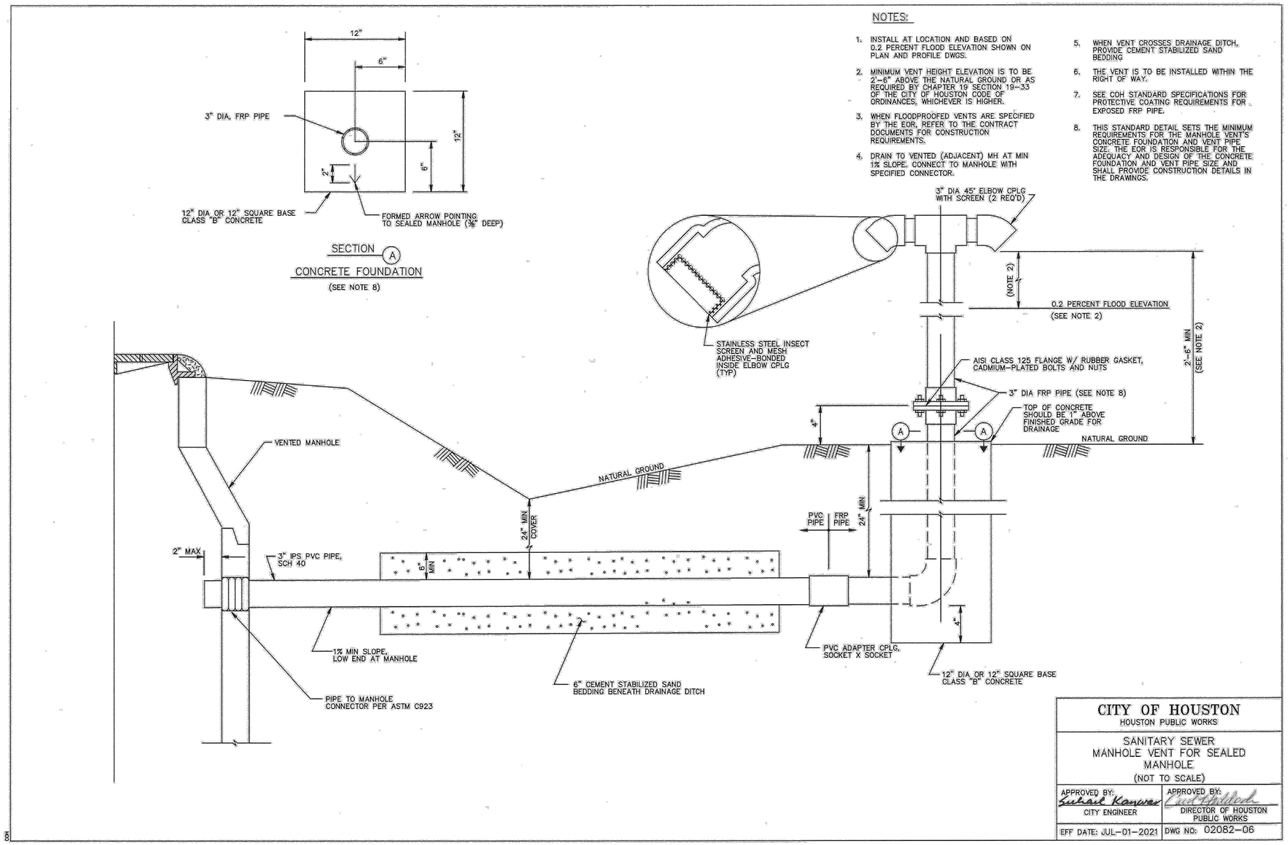

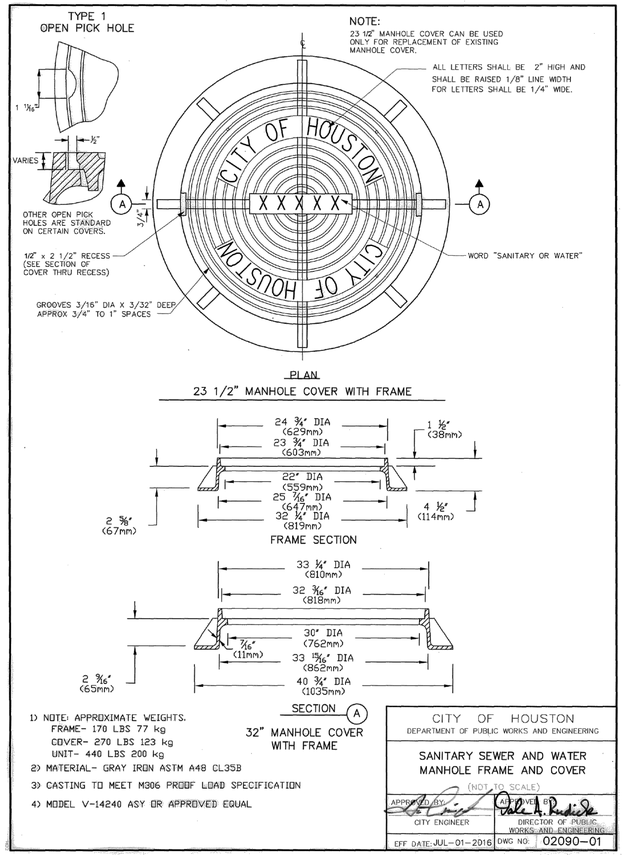

RPS
A TETRA TECH COMPANY
Texas PE Firm Reg. #F-929
575 N. Dairy Ashford, Suite 700,
Houston, Texas 77079
T +1 281 589 7257
E usinfrastructure@rpsgroup.com

SURVEYED BY: KUO Inc.
FB NO. F-4578

This document is released for the purposes of interim review only under the authority of:

Neha Raval, P.E.
Texas P.E. No. 141506
09/11/2026

It is not to be used for bidding, construction, or permitting purposes.

CITY OF HOUSTON
HOUSTON PUBLIC WORKS

LIFT STATION REHABILITATION & RECONSTRUCTION

WASTEWATER DETAILS
(SHEET 2 OF 6)
STD-C-19

WBS NUMBER	FOR CITY OF HOUSTON USE ONLY
R-000267-178A-3	
DRAWING SCALE	
AS NOTED	
CITY OF HOUSTON PM	
TAHA LOTIA	
SHEET NO. 85 OF 147	

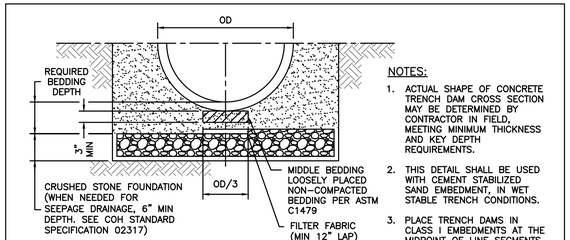

CROSS-SECTION
OF CRUSHED STONE FOUNDATION

NOTES:

1. ACTUAL SHAPE OF CONCRETE TRENCH DAM CROSS SECTION MAY BE DETERMINED BY CONTRACTOR IN FIELD, MEETING MINIMUM THICKNESS AND KEY DEPTH REQUIREMENTS.
2. THIS DETAIL SHALL BE USED WITH CEMENT STABILIZED SAND EMBEDMENT, IN WET STABLE TRENCH CONDITIONS.
3. PLACE TRENCH DAMS IN CLASS I EMBEDMENTS AT THE MIDPOINT OF LINE SEGMENTS LONGER THAN 100 FEET BETWEEN MANHOLES.
4. FOR THERMOPLASTIC STORM SEWER PIPE INSTALLATION REFER TO THE DETAIL PROVIDED BY THE ENGINEER OF RECORD.

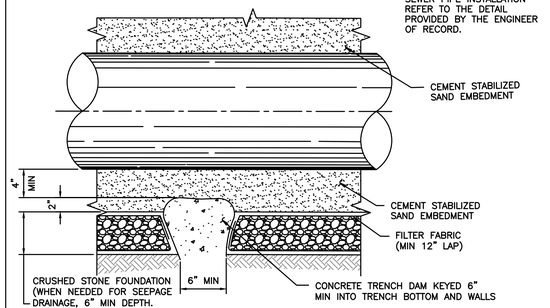

LONGITUDINAL SECTION
ALONG PIPE ℄ AT FOUNDATION TRENCH DAM

DISCLAIMER: THE USE OF THIS STANDARD IS GOVERNED BY THE TEXAS ENGINEERING PRACTICE ACT. THE DESIGN REQUIREMENTS ON THIS STANDARD DO NOT PURPORT TO ADDRESS ALL OF THE SAFETY CONCERNS ASSOCIATED WITH THEIR USE. THE ENGINEER OF RECORD (EOR) IS TO REVIEW THESE DESIGN REQUIREMENTS AND BY AUTHORIZING THEIR USE, ACCEPTS RESPONSIBILITY FOR THEIR APPLICABILITY, ADEQUACY AND SAFETY. NO WARRANTY OF ANY KIND IS MADE BY THE CITY OF HOUSTON FOR ANY PURPOSES WHATSOEVER. THE CITY OF HOUSTON ASSUMES NO RESPONSIBILITY FOR INCORRECT RESULTS OR DAMAGES RESULTING FROM ITS USE.

APPROVED BY:

Signed by: 19EDB3207373400...
CITY ENGINEER

Signed by: DC4E5CF7CF414A3...
DIRECTOR OF HPW

CITY OF HOUSTON
HOUSTON PUBLIC WORKS STANDARD

SANITARY OR STORM SEWER
CRUSHED STONE FOUNDATION
FOR WET STABLE TRENCH

(SCALE: NOT TO SCALE)

EFF DATE: MAR-02-2026 | DWG NO: 02317-02

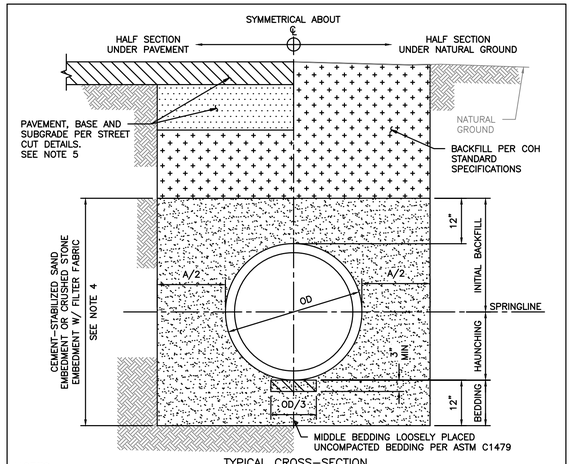

TYPICAL CROSS-SECTION

NOTES:

1. THIS DETAIL MAY BE USED ONLY FOR DRY STABLE TRENCH CONDITIONS PER COH STANDARD. SEE COH STANDARD SPECIFICATION FOR REQUIREMENTS IN OTHER CONDITIONS.
2. MIN TRENCH WIDTH SHALL BE PIPE OD PLUS AN ALLOWANCE "A" FOR THE NOMINAL PIPE SIZE:

NOMINAL PIPE SIZE	"A"
30" OR LESS	24"
36" TO 42"	36"
GREATER THAN 42"	48"

3. MAX TRENCH WIDTH SHALL BE NOT GREATER THAN MIN TRENCH WIDTH PLUS 24 INCHES, UNLESS OTHERWISE NOTED.
4. ALTERNATIVE EMBEDMENT BACKFILL MATERIALS FOR FORCE MAINS MAY BE ALLOWED. SEE COH STANDARD SPECIFICATIONS.
5. REFER TO THE COH STD DETAILS 02951-01 THROUGH 05 FOR STREET CUT REQUIREMENTS.
6. FOR THERMOPLASTIC STORM SEWER PIPE INSTALLATION REFER TO COH STD DETAIL 02317-10G.

DISCLAIMER: THE USE OF THIS STANDARD IS GOVERNED BY THE TEXAS ENGINEERING PRACTICE ACT. THE DESIGN REQUIREMENTS ON THIS STANDARD DO NOT PURPORT TO ADDRESS ALL OF THE SAFETY CONCERNS ASSOCIATED WITH THEIR USE. THE ENGINEER OF RECORD (EOR) IS TO REVIEW THESE DESIGN REQUIREMENTS AND BY AUTHORIZING THEIR USE, ACCEPTS RESPONSIBILITY FOR THEIR APPLICABILITY, ADEQUACY AND SAFETY. NO WARRANTY OF ANY KIND IS MADE BY THE CITY OF HOUSTON FOR ANY PURPOSES WHATSOEVER. THE CITY OF HOUSTON ASSUMES NO RESPONSIBILITY FOR INCORRECT RESULTS OR DAMAGES RESULTING FROM ITS USE.

APPROVED BY:

Signed by: 19EDB3207373400...
CITY ENGINEER

Signed by: DC4E5CF7CF414A3...
DIRECTOR OF HPW

CITY OF HOUSTON
HOUSTON PUBLIC WORKS STANDARD

SANITARY OR STORM SEWER
BEDDING AND BACKFILL FOR DRY
STABLE TRENCH

(SCALE: NOT TO SCALE)

EFF DATE: MAR-02-2026 | DWG NO: 02317-03

RPS A TETRA TECH COMPANY
Texas PE Firm Reg. #F-929
575 N. Dairy Ashford, Suite 700,
Houston, Texas 77079
T +1 281 589 7257
E usinfrastructure@rpsgroup.com

SURVEYED BY: KUO Inc.
FB NO. F-4578

This document is released for the purposes of interim review only under the authority of:

Neha Raval, P.E.
Texas P.E. No. 141506
09/11/2026

It is not to be used for bidding, construction, or permitting purposes.

CITY OF HOUSTON
HOUSTON PUBLIC WORKS

LIFT STATION REHABILITATION & RECONSTRUCTION

WASTEWATER DETAILS
(SHEET 3 OF 6)
STD-C-20

WBS NUMBER	FOR CITY OF HOUSTON USE ONLY
R-000267-178A-3	
DRAWING SCALE	
AS NOTED	
CITY OF HOUSTON PM	
TAHA LOTIA	
SHEET NO. 86 OF 147	

FILE PATH: C:\Users\andres.martinezjr\DC\ACCDocs\Tetra Tech Inc\200-317106-24001 COH LS Rehab Design\Project Files\CAD\R-000267-178A-3_STD_WASTEWATER DETAILS.dgn | DATE/TIME PLOTTED: 5/9/2026 5:01 PM

NOTE:

1. THE CONTRACTOR SHALL CENTER A MINIMUM OF 18 FOOT JOINT OF DUCTILE IRON PIPE OR C900 PVC PIPE ACROSS THE CENTER OF THE PROPOSED STORM SEWER.

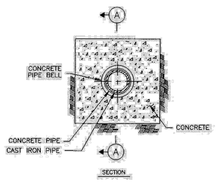

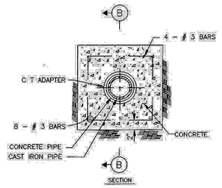

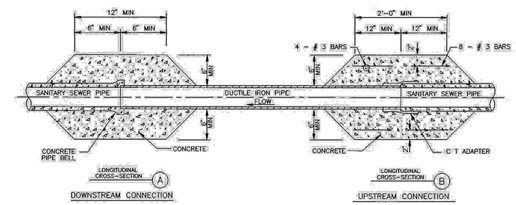

CITY OF HOUSTON DEPARTMENT OF PUBLIC WORKS AND ENGINEERING ENGINEERING, CONSTRUCTION AND REAL ESTATE DIVISION	
SANITARY SEWER DUCTILE IRON PIPE STORM SEWER CROSSING (NOT TO SCALE)	
APPROVED BY CITY ENGINEER	APPROVED BY DIRECTOR OF PUBLIC WORKS AND ENGINEERING
EFF DATE:OCT-01-2002	DWG NO: 02531-03

NOTES:

1. PLACE AND COMPACT EMBEDMENT AND TRENCH ZONE BACKFILL PER COH STANDARD SPECIFICATIONS.

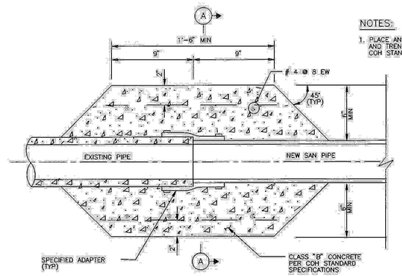

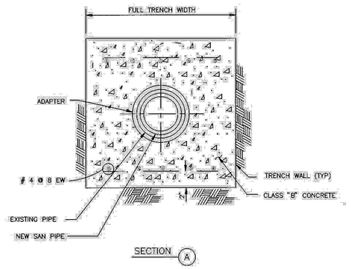

CITY OF HOUSTON DEPARTMENT OF PUBLIC WORKS AND ENGINEERING ENGINEERING, CONSTRUCTION AND REAL ESTATE DIVISION	
SANITARY SEWER PIPE TRANSITION FOR 36" SEWER AND SMALLER (NOT TO SCALE)	
APPROVED BY CITY ENGINEER	APPROVED BY DIRECTOR OF PUBLIC WORKS AND ENGINEERING
EFF DATE: OCT-01-2002	DWG NO: 02531-04

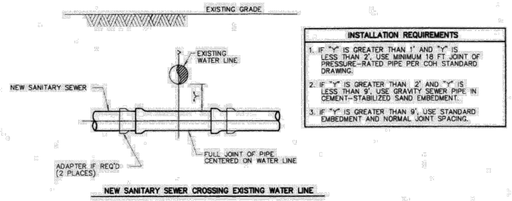

INSTALLATION REQUIREMENTS
1. IF "X" IS GREATER THAN 1' AND "Y" IS LESS THAN 2', USE MINIMUM 18 FT JOINT OF PRESSURE-RATED PIPE PER COH STANDARD DRAWING.
2. IF "Y" IS GREATER THAN 2' AND "Y" IS LESS THAN 9', USE GRAVITY SEWER PIPE IN CEMENT-STABILIZED SAND EMBEDMENT.
3. IF "Y" IS GREATER THAN 9', USE STANDARD EMBEDMENT AND NORMAL JOINT SPACING.

NEW SANITARY SEWER CROSSING EXISTING WATER LINE

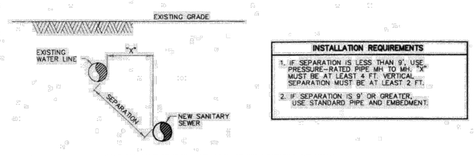

INSTALLATION REQUIREMENTS
1. IF SEPARATION IS LESS THAN 9', USE PRESSURE-RATED PIPE. MH TO MH "X" MUST BE AT LEAST 4 FT. VERTICAL SEPARATION MUST BE AT LEAST 2 FT.
2. IF SEPARATION IS 9' OR GREATER, USE STANDARD PIPE AND EMBEDMENT.

NEW SANITARY SEWER PARALLEL TO EXISTING WATER LINE

INSTALLING SANITARY SEWERS CROSSING OR PARALLEL TO WATER LINES

NOTES:

1. SANITARY SEWER MUST BE BELOW WATER LINE WHEREVER POSSIBLE. WHEN WATERLINE IS BELOW THE SANITARY SEWER PROVIDE MINIMUM 2 FT SEPARATION AND INSTALL PIPE IN ACCORDANCE TO CHAPTER 7 TABLE 7.3 OF COH DESIGN MANUAL.
2. WHEN PRESSURE-RATED PIPE IS REQUIRED, PROVIDE PIPE WITH MINIMUM 150 psi PRESSURE RATING.
3. ADAPTERS MUST BE FACTORY MOLDED OR FABRICATED, WITH RING STIFFNES AT LEAST EQUAL TO THE ADJOINING SANITARY SEWER PIPE, AND USING RESILIENT GASKET OR SEAL MATERIAL. FLEXIBLE RUBBER "BOOT" TYPE ADAPTERS WILL NOT BE ACCEPTED.
4. INSTALL FORCE MAINS SAME AS FOR GRAVITY SEWER, USING SPECIFIED PRESSURE PIPE.
5. "Y" MUST ALWAYS BE GREATER THAN OR EQUAL TO 1 FT FOR PRESSURE RATED SS AND 2 FT FOR NON-PRESSURE RATED SS.
6. "X" MUST BE GREATER THAN OR EQUAL TO 4 FT.
7. ALTERNATIVES MAY BE SHOWN ON THE DRAWINGS OR DESCRIBED IN THE SPECIFICATIONS.
8. SEPARATION REQUIREMENTS SHOWN HERE DO NOT APPLY TO SERVICE CONNECTIONS – REFER TO PLUMBING CODE FOR APPLICABLE REQUIREMENTS.

CITY OF HOUSTON DEPARTMENT OF PUBLIC WORKS AND ENGINEERING	
SANITARY SEWER INSTALLING SANITARY SEWERS CROSSING OR PARALLEL TO WATER LINES (NOT TO SCALE)	
APPROVED BY CITY ENGINEER	APPROVED BY DIRECTOR OF PUBLIC WORKS AND ENGINEERING
EFF DATE: JUL-01-2010	DWG NO: 02531-05

RPS
A TETRA TECH COMPANY
Texas PE Firm Reg. #F-929
575 N. Dairy Ashford, Suite 700,
Houston, Texas 77079
T +1 281 589 7257
E usinfrastructure@rpsgroup.com

SURVEYED BY: KUO Inc.
FB NO. F-4578

This document is released for the purposes of interim review only under the authority of:

Neha Raval, P.E.
Texas P.E. No. 141506
09/11/2026

It is not to be used for bidding, construction, or permitting purposes.

CITY OF HOUSTON
HOUSTON PUBLIC WORKS

LIFT STATION REHABILITATION & RECONSTRUCTION

WASTEWATER DETAILS
(SHEET 4 OF 6)
STD-C-21

WBS NUMBER	FOR CITY OF HOUSTON USE ONLY
R-000267-178A-3	
DRAWING SCALE	
AS NOTED	
CITY OF HOUSTON PM	
TAHA LOTIA	
SHEET NO. 87 OF 147	

FILE PATH: C:\Users\andres.martinezjr\DC\ACCDocs\Tetra Tech Inc\200-317106-24001 COH LS Rehab Design\Project Files\CAD\R-000267-178A-3 DETAILS.dgn 9/9/2026 5:01 PM

FILE PATH: C:\Users\andres.martinezjr\DC\ACCDocs\Tetra Tech Inc\200-317106-24001 COH LS Rehab Design\Project Files\CAD\R-000267-178A-3-STD-DETAILS.dgn
PLOTTED: 7/9/2026 5:01 PM

NOTES:

1. REPLACE EXISTING SERVICE LINE TO EXTENT SHOWN ON PLAN AND PROFILE DRAWINGS, OR AS SPECIFIED.
2. EXCAVATE & REMOVE EXISTING SEWER LATERAL AS REQUIRED TO ALLOW RECONSTRUCTION.

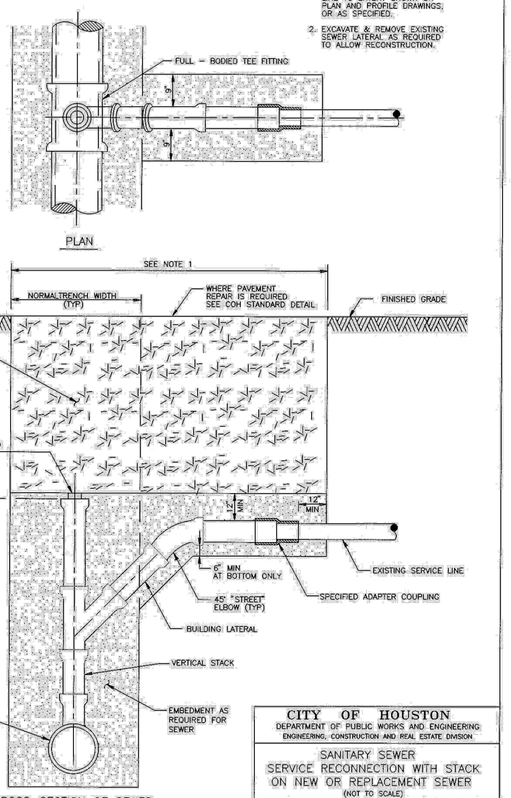

CROSS–SECTION OF SEWER AT SERVICE CONNECTION

CITY OF HOUSTON DEPARTMENT OF PUBLIC WORKS AND ENGINEERING ENGINEERING, CONSTRUCTION AND REAL ESTATE DIVISION	
SANITARY SEWER SERVICE RECONNECTION WITH STACK ON NEW OR REPLACEMENT SEWER (NOT TO SCALE)	
APPROVED BY: CITY ENGINEER	APPROVED BY: DIRECTOR OF PUBLIC WORKS AND ENGINEERING
EFF DATE: OCT–01–2002	DWG NO: 02534–02

NOTE:

1. REPLACE EXISTING SERVICE LINE TO EXTENT SHOWN ON PLAN AND PROFILE DRAWINGS, OR AS SPECIFIED.

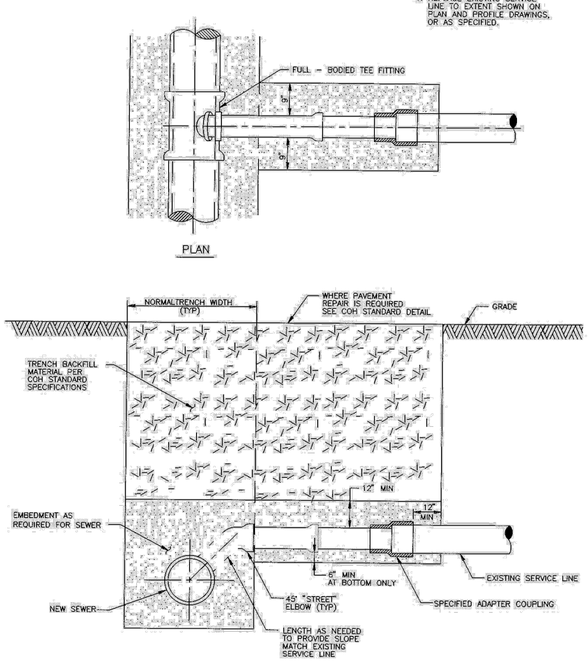

CROSS–SECTION OF SEWER AT SERVICE CONNECTION

CITY OF HOUSTON DEPARTMENT OF PUBLIC WORKS AND ENGINEERING ENGINEERING, CONSTRUCTION AND REAL ESTATE DIVISION	
SANITARY SEWER SERVICE RECONNECTION ON NEW OR REPLACEMENT SEWER (NOT TO SCALE)	
APPROVED BY: CITY ENGINEER	APPROVED BY: DIRECTOR OF PUBLIC WORKS AND ENGINEERING
EFF DATE: OCT–01–2002	DWG NO: 02534–04

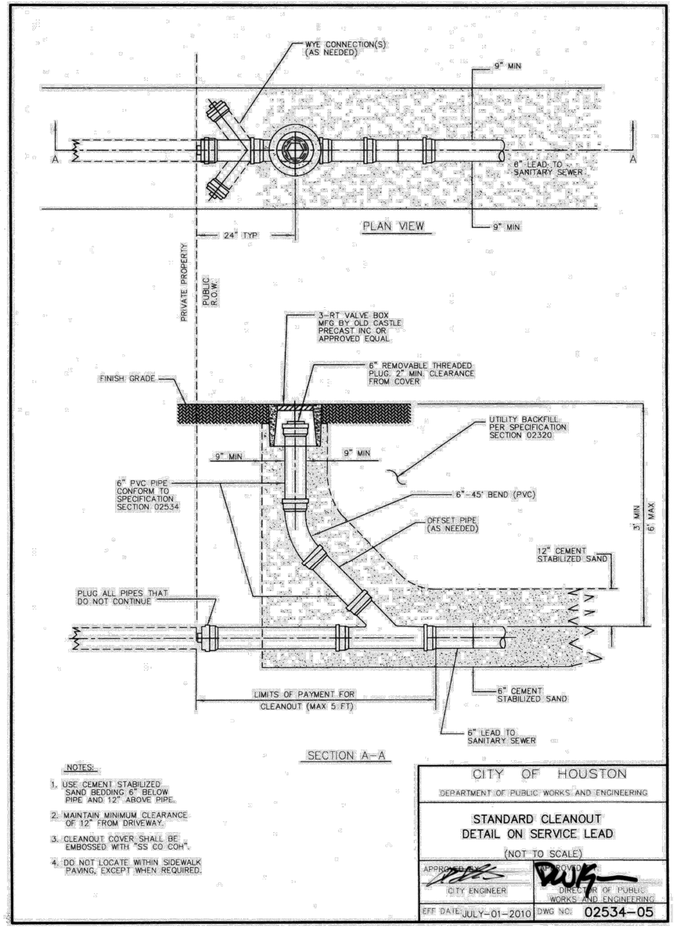

SECTION A–A

NOTES:

1. USE CEMENT STABILIZED SAND BEDDING 6" BELOW PIPE AND 12" ABOVE PIPE.
2. MAINTAIN MINIMUM CLEARANCE OF 12" FROM DRIVEWAY.
3. CLEANOUT COVER SHALL BE EMBOSSED WITH "SS CO COH".
4. DO NOT LOCATE WITHIN SIDEWALK PAVING, EXCEPT WHEN REQUIRED.

CITY OF HOUSTON DEPARTMENT OF PUBLIC WORKS AND ENGINEERING	
STANDARD CLEANOUT DETAIL ON SERVICE LEAD (NOT TO SCALE)	
APPROVED BY: CITY ENGINEER	APPROVED BY: DIRECTOR OF PUBLIC WORKS AND ENGINEERING
EFF DATE: JULY–01–2010	DWG NO: 02534–05

RPS
A TETRA TECH COMPANY
Texas PE Firm Reg. #F-929
575 N. Dairy Ashford, Suite 700,
Houston, Texas 77079
T +1 281 589 7257
E usinfrastructure@rpsgroup.com

SURVEYED BY: KUO Inc.
FB NO. F–4578

This document is released for the purposes of interim review only under the authority of:

Neha Raval, P.E.
Texas P.E. No. 141506
09/11/2026

It is not to be used for bidding, construction, or permitting purposes.

CITY OF HOUSTON
HOUSTON PUBLIC WORKS

LIFT STATION REHABILITATION & RECONSTRUCTION

WASTEWATER DETAILS
(SHEET 5 OF 6)
STD–C–22

WBS NUMBER	FOR CITY OF HOUSTON USE ONLY
R–000267–178A–3	
DRAWING SCALE	
AS NOTED	
CITY OF HOUSTON PM	
TAHA LOTIA	
SHEET NO. 88 OF 147	

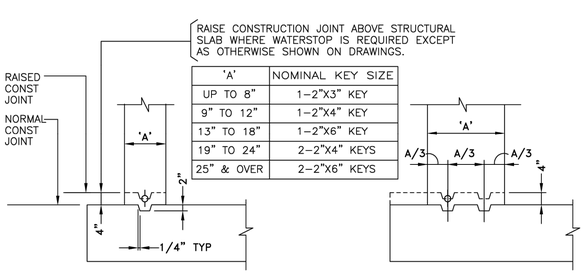

'A'	NOMINAL KEY SIZE
UP TO 8"	1–2"X3" KEY
9" TO 12"	1–2"X4" KEY
13" TO 18"	1–2"X6" KEY
19" TO 24"	2–2"X4" KEYS
25" & OVER	2–2"X6" KEYS

NUMBER AND SIZE OF KEYS SHOWN APPLY TO JOINTS IN SLABS AND TO BOTH VERTICAL AND HORIZONTAL JOINTS IN WALLS EXCEPT AS OTHERWISE NOTED ON DRAWINGS.

DESIGN ENGINEER TO REVISE DETAIL FOR SPECIFIC PROJECT REQUIREMENTS. DELETE UNECESSARY INFORMATION.

CONSTRUCTION JOINT KEY DETAILS

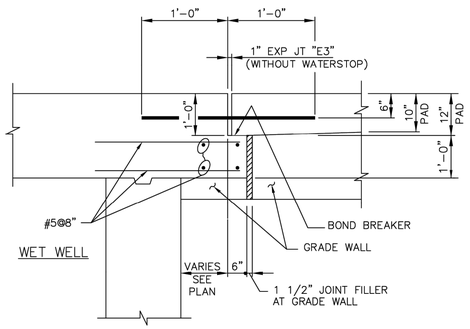

TYPICAL EXPANSION JOINT
(BETWEEN WET WELL AND VALVE PAD)

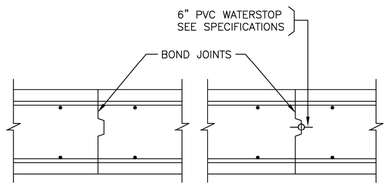

TYPE C1 TYPE C2

CONSTRUCTION JOINTS

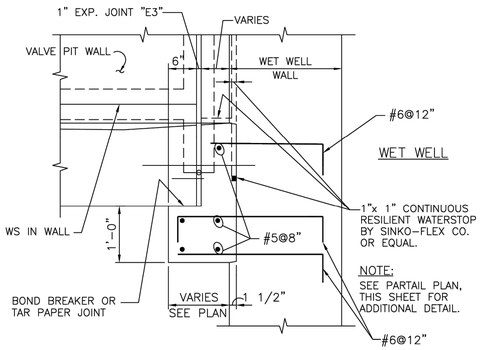

SECTION
JOINT BETWEEN WET WELL & VAULT FLOOR

NOTES:

1. CONTRACTOR TO CONFIRM SIZE AND LOCATION OF THE ACCESS HATCH OPENINGS PER SELECT HATCH AND PUMP MANUFACTURER'S REQUIREMENTS.
2. DIMENSIONS NOTED ARE RELATIVE TO THE PUMP SIZE AND MANUFACTURER SELECTED. CONTRACTOR SHALL VERIFY.
3. DETAILS SHOWN ON THIS DRAWING ARE TYPICAL DETAILS AND SHALL BE USED WHOLLY OR IN PART WHERE THEY APPLY EXCEPT WHERE MODIFIED BY DETAILED DRAWINGS & SPECIFICATIONS.
4. PROVIDE 2–#6 X (B+4'–0") ADDITIONAL REBARS @ TOP AND BOTTOM AND 2–#6 X (A+4'–0") ADDITIONAL REBARS AT EACH SIDE OF OPENING IN WALLS ONLY.
5. PROVIDE ADDL BARS EQUAL TO ONE–HALF OF BARS INTERRUPTED AT EACH SIDE OF OPENING AT 3" C/C. THESE BARS SHALL BE ORIGINAL SIZES AND LENGTHS AS THOSE OF THE INTERRUPTED BARS. (TYPICAL FOR OPENINGS IN SLABS AND PRESSURE WALLS.)

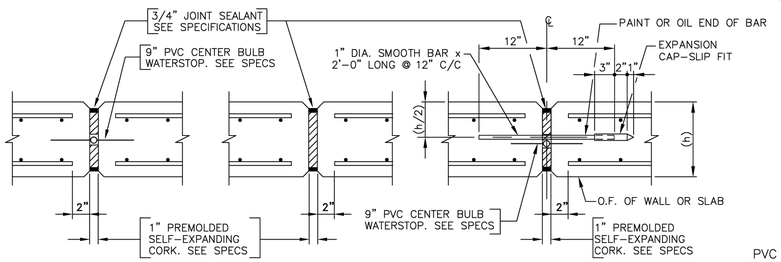

TYPE "E1" TYPE "E2" TYPE "E3"

EXPANSION JOINTS

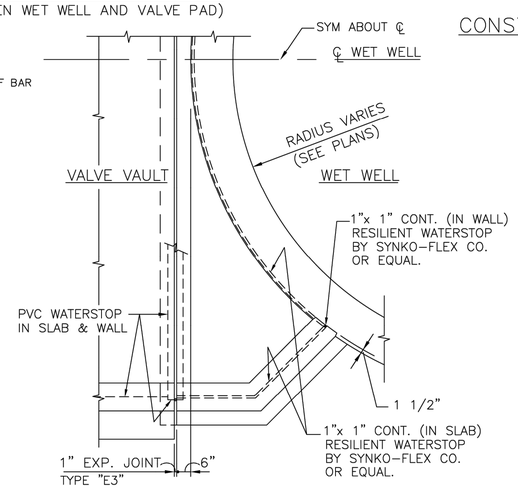

PARTIAL PLAN
JOINT BETWEEN WET WELL & VAULT

LD=TENSILE DEVELOPMENT LENGTH FOR REINF BARS WITH FY = 60 KSI	
BAR SIZE	TENSION DEVELOPMENT LENGTH 'LD' INCHES
3	12
4	12
5	15
6	19
7	26
8	35
9	44
10	56
11	68

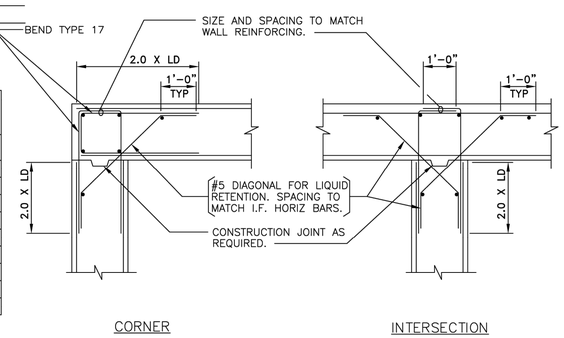

TYPICAL DETAILS OF WALL REINFORCEMENT

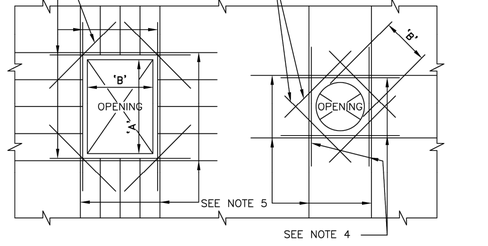

ADDITIONAL REINFORCING STEEL AT OPENINGS IN WALLS AND SLABS

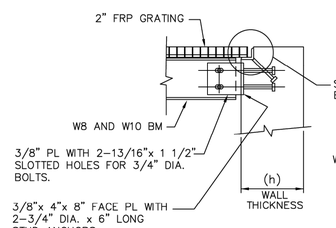

TYPICAL BEAM CONNECTION TO CONCRETE WALL

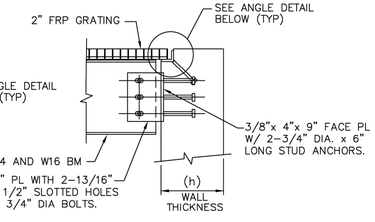

TYP. BEAM CONNECTION TO CONCRETE WALL

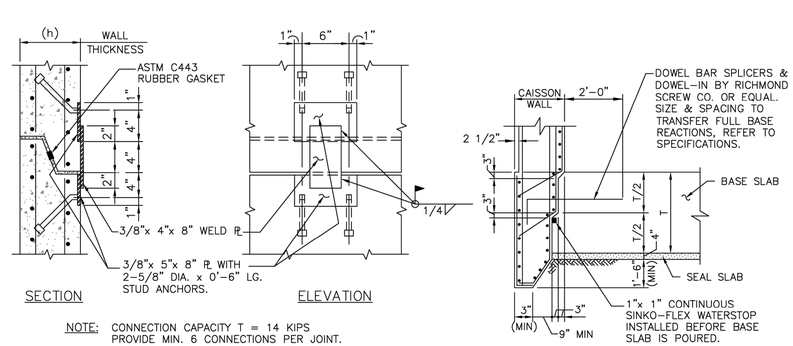

NOTE: CONNECTION CAPACITY T = 14 KIPS
PROVIDE MIN. 6 CONNECTIONS PER JOINT.

PRECAST UNITS CONNECTION DETAILS
CAISSON CONSTRUCTION METHOD

CAISSON METHOD
TYP BASE DETAIL
(FOR PC AND CIP WET WELL)

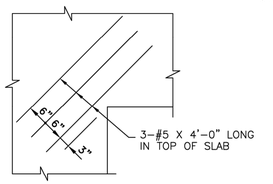

SLAB DETAIL AT RE – ENTRANT CORNER

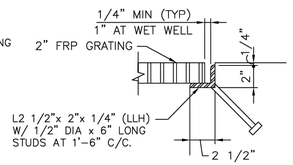

TYPICAL ANGLE DETAIL

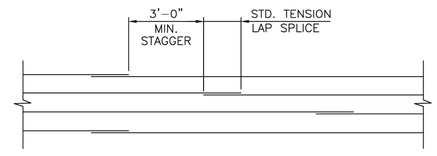

SPLICE LAYOUT FOR HOOP BARS
(WET WELL WALL)

RPS A TETRA TECH COMPANY
Texas PE Firm Reg. #F-929
575 N. Dairy Ashford, Suite 700, Houston, Texas 77079
T +1 281 589 7257
E usinfrastructure@rpsgroup.com

SURVEYED BY: KUO Inc.
FB NO. F–4578

This document is released for the purposes of interim review only under the authority of:

Neha Raval, P.E.
Texas P.E. No. 141506
09/11/2026

It is not to be used for bidding, construction, or permitting purposes.

CITY OF HOUSTON
HOUSTON PUBLIC WORKS

LIFT STATION REHABILITATION & RECONSTRUCTION

WASTEWATER DETAILS
(SHEET 6 OF 6)
STD–C–23

WBS NUMBER	FOR CITY OF HOUSTON USE ONLY
R–000267–178A–3	
DRAWING SCALE	
AS NOTED	
CITY OF HOUSTON PM	
TAHA LOTIA	
SHEET NO. 89 OF 147	

FILE PATH: C:\Users\andres.martinez\DC\ACCDocs\Tetra Tech Inc\200–317106–24001 COH LS Rehab Design\Project Files\CAD\R–000267–178A–3 STD DETAILS.dwg PLOTTED: 9/09/2026 5:01 PM

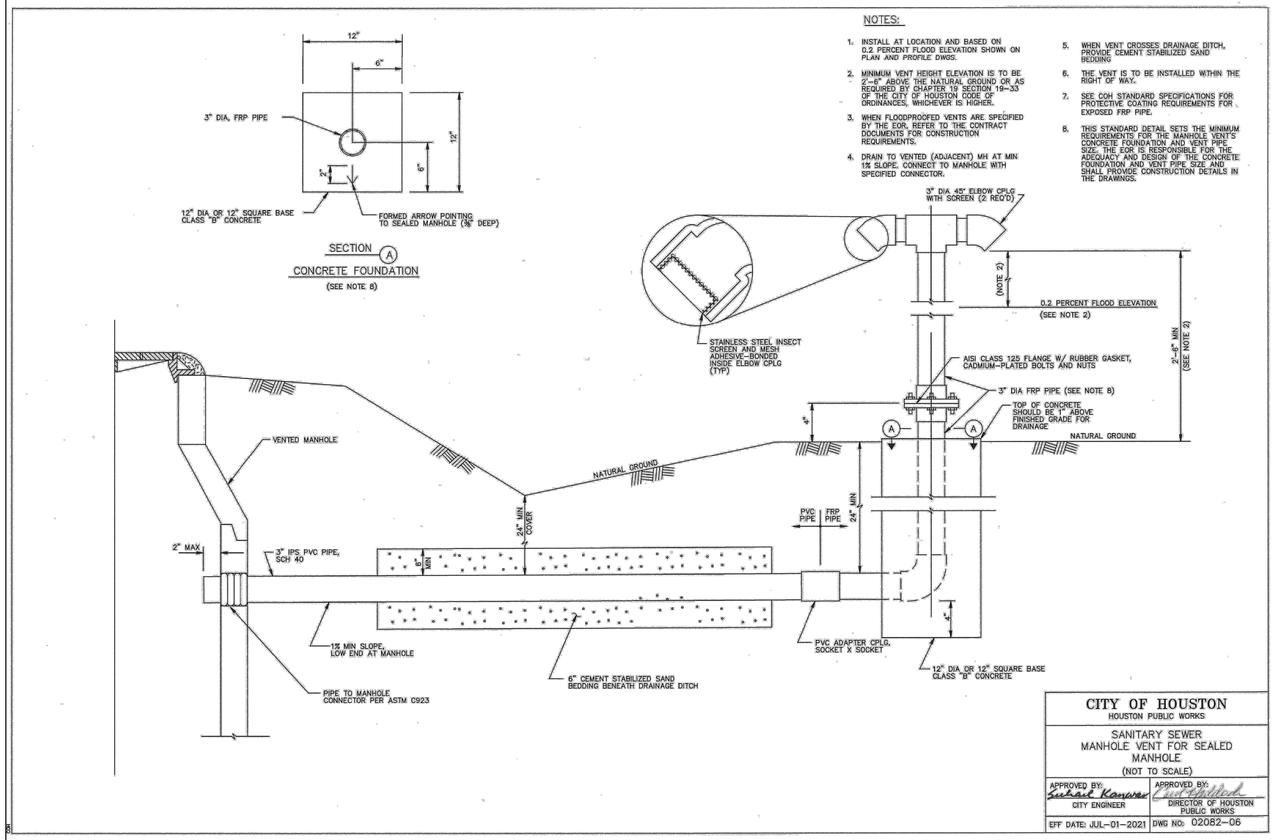

CITY OF HOUSTON HOUSTON PUBLIC WORKS	
SANITARY SEWER MANHOLE VENT FOR SEALED MANHOLE (NOT TO SCALE)	
APPROVED BY: CITY ENGINEER	APPROVED BY: DIRECTOR OF HOUSTON PUBLIC WORKS
EFF DATE: JUL-01-2021	DWG NO: 02082-06

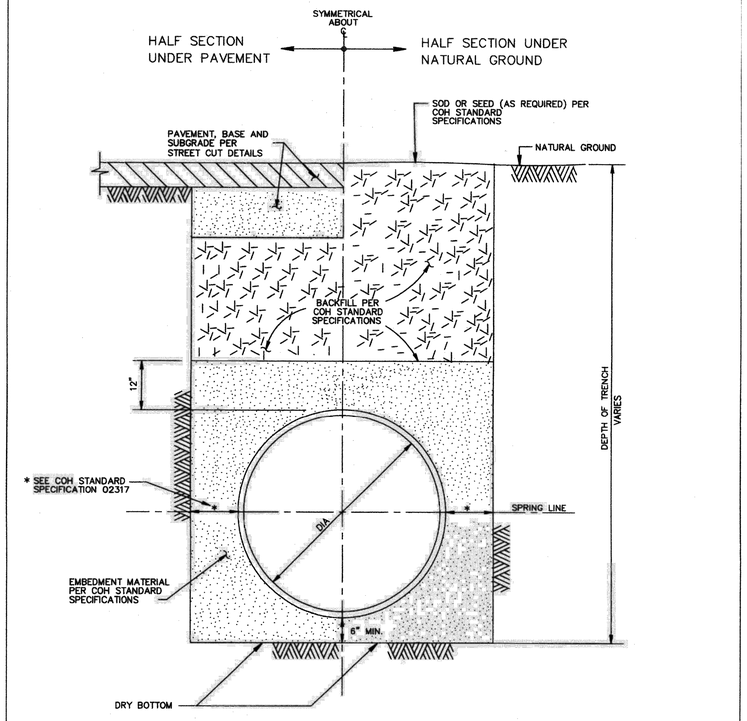

CITY OF HOUSTON DEPARTMENT OF PUBLIC WORKS AND ENGINEERING	
WATER DISTRIBUTION MAIN BEDDING AND BACKFILL FOR OPEN CUT TRENCHES (NOT TO SCALE)	
APPROVED BY: CITY ENGINEER	APPROVED BY: DIRECTOR OF PUBLIC WORKS AND ENGINEERING
EFF DATE: JUL-01-2010	DWG NO: 02317-04

RPS
A TETRA TECH COMPANY
Texas PE Firm Reg. #F-929
575 N. Dairy Ashford, Suite 700,
Houston, Texas 77079
T +1 281 589 7257
E usinfrastructure@rpsgroup.com

SURVEYED BY: KUO Inc.
FB NO. F-4578

This document is released for the purposes of interim review only under the authority of:

Neha Raval, P.E.
Texas P.E. No. 141506
09/11/2026

It is not to be used for bidding, construction, or permitting purposes.

CITY OF HOUSTON
HOUSTON PUBLIC WORKS

LIFT STATION REHABILITATION & RECONSTRUCTION

FORCE MAIN DETAILS
(SHEET 1 OF 4)
STD-C-24

WBS NUMBER	FOR CITY OF HOUSTON USE ONLY
R-000267-178A-3	
DRAWING SCALE	
AS NOTED	
CITY OF HOUSTON PM	
TAHA LOTIA	
SHEET NO. 90 OF 147	

FILE PATH: C:\Users\andres.martinezjr\DC\ACCDocs\Tetra Tech Inc\200-317106-24001 COH LS Rehab Design\Project Files\CAD\R-000267-[illegible]DETAILS P[illegible]DATE: 19/09/2026 05:02 PM

NOTE:

1. MATERIALS AND COATINGS TO BE IN ACCORDANCE WITH WATER LINE STANDARD SPECIFICATIONS.
2. RESTRAIN EXISTING PIPING BEYOND STEEL SECTION AS REQUIRED TO PREVENT MOVEMENT.
3. AS PER DESIGN GUIDELINE.

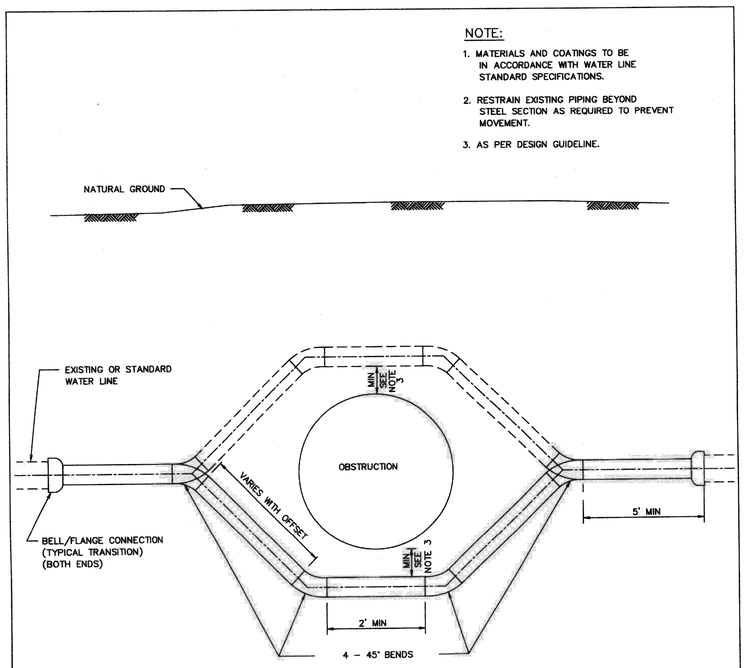

PIPE OFFSET ALTERNATES

1. DUCTILE IRON PIPE PRESSURE 250 PSI WITH APPROVED RESTRAINED JOINTS.
2. PVC PIPE WITH INTEGRAL RESTRAINED JOINT SYSTEM, OR DUCTILE – IRON RESTRINED JOINT FITTINGS, EPOXY LINED AND COATED. USE 250 PSI AWWA C900 DR 14 FOR PVC RESTRAINED JOINTS.
3. PVC NOT ALLOWED FOR GREATER THAN 20 FT OF COVER OR FOR DIAMETER LARGER THAN 20 IN.
4. USE ONLY DUCTILE IRON AND PVC PRODUCTS LISTED ON OCE DIVISION APPROVED PRODUCTS LIST AND IN ACCORDANCE WITH CITY STANDARD SPECIFICATIONS.

CITY OF HOUSTON DEPARTMENT OF PUBLIC WORKS AND ENGINEERING	
TYPICAL STEEL PIPE OFFSET SECTION FOR WATER LINES (NOT TO SCALE)	
APPROVED BY: CITY ENGINEER	APPROVED BY: DIRECTOR OF PUBLIC WORKS AND ENGINEERING
EFF DATE: JULY-01-2010	DWG NO: 02511-01

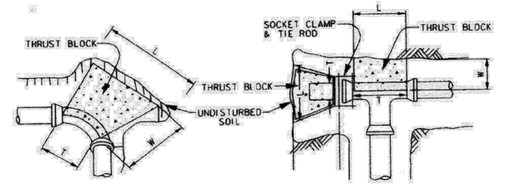

90° BEND
(45° BENDS SIMILAR)

TEE & PLUG

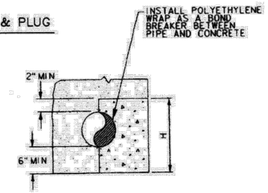

PIPE
CROSS SECTION

MINIMUM BLOCKING DIMENSION IN INCHES												
PIPE SIZE	90° BEND				45° BEND				TEE/PLUG			
	W	H	L	T	W	H	L	T	W	H	L	T
4"	6	12	14	10	6	8	11	8	6	10	12	12
6"	8	14	26	12	8	14	14	12	8	14	19	19
8"	10	16	40	16	10	18	20	16	10	18	26	26
10"	12	24	42	18	12	22	25	18	12	24	30	30
12"	14	36	40	30	14	26	30	22	14	26	40	40

CORRECTION FACTORS		
SOIL TYPE	SOIL BEARING STRENGTH S_b (lb/ft²)	MULTIPLY "L" AND "H" BY
SOFT CLAY	1000	1.73
SILT	1500	1.41
SANDY SILT	3000	1.00
SAND	4000	0.87
SANDY CLAY	6000	0.71
HARD CLAY	9000	0.58

NOTES:

1. DEPTH "W" MAY BE GREATER THAN SPECIFIED TO ALLOW WORKING SPACE.
2. BLOCKING MUST BE PLACED AGAINST UNDISTURBED EARTH. WHERE THIS IS NOT POSSIBLE, THE FILL BETWEEN THE BEARING SURFACE AND UNDISTURBED SOIL MUST BE COMPACTED TO AT LEAST 90% STANDARD PROCTOR DENSITY.
3. PROVIDE CONCRETE IN ACCORDANCE WITH STANDARD SPECIFICATION SECTION 03315 – CONCRETE FOR UTILITY CONSTRUCTION.
4. BLOCKING DIMENSIONS SHOWN ARE BASED ON 3000 PSI SOIL BEARING STRENGTH AND 125 PSI INTERNAL WATER PRESSURE. FOR OTHER SOIL CONDITIONS, MULTIPLY DIMENSIONS "L" AND "H" BY THE APPROPRIATE CORRECTION FACTOR.

CITY OF HOUSTON DEPARTMENT OF PUBLIC WORKS AND ENGINEERING	
THRUST BLOCK DETAIL FOR WATER LINES (4-INCH TO 12 INCH) (NOT TO SCALE)	
APPROVED BY: CITY ENGINEER	APPROVED BY: DIRECTOR OF PUBLIC WORKS AND ENGINEERING
EFF DATE: JULY-01-2010	DWG NO: 02511-02

RPS
A TETRA TECH COMPANY
Texas PE Firm Reg. #F-929
575 N. Dairy Ashford, Suite 700,
Houston, Texas 77079
T +1 281 589 7257
E usinfrastructure@rpsgroup.com

SURVEYED BY: KUO Inc.
FB NO. F-4578

This document is released for the purposes of interim review only under the authority of:

Neha Raval, P.E.
Texas P.E. No. 141506
09/11/2026

It is not to be used for bidding, construction, or permitting purposes.

CITY OF HOUSTON
HOUSTON PUBLIC WORKS

LIFT STATION REHABILITATION & RECONSTRUCTION

FORCE MAIN DETAILS
(SHEET 2 OF 4)
STD-C-25

WBS NUMBER	FOR CITY OF HOUSTON USE ONLY
R-000267-178A-3	
DRAWING SCALE	
AS NOTED	
CITY OF HOUSTON PM	
TAHA LOTIA	
SHEET NO. 91 OF 147	

FILE PATH: C:\Users\andres.martinezjr\DC\ACCDocs\Tetra Tech Inc\200-317106-24001 COH LS Rehab Design\Project Files\CAD\R-000267-178A-3\Engineering\Drawings\Force Main Details\DETAILS P(3).DWG PLOTTED: 29/09/2026 05:02 PM

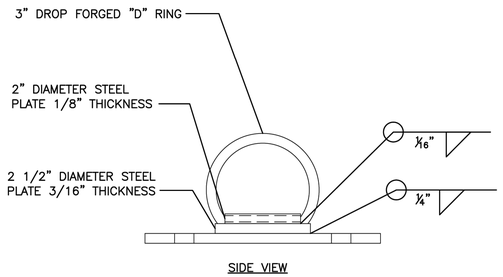

SIDE VIEW

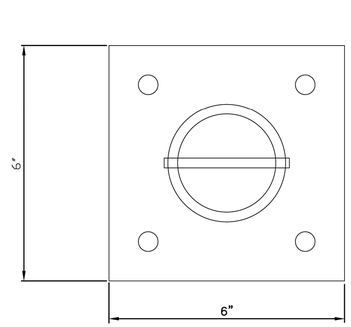

PLAN VIEW

CB SERIES FALL PROTECTION CB–1B BOLT ANCHORED

DETAIL 1 / Z0C10
NTS

NOTES:

STEEL BASE PLATE SHALL BE ¼" HOT ROLLED STEEL PLATE THAT MEETS ASTM A–570 SPECIFICATIONS.

2 ½" DIAMETER STEEL PLATE, 3/16" THICK ATTACHED TO BASE PLATE USING ¼" FILLET WELD.

2" DIAMETER FORMED STEEL PLATE, ⅛" THICK USED TO ATTACHED "D" RING TO THE 2 ½" DIAMETER STEEL PLATE USING A 1/16" FILLET WELD.

BASE PLATE CAN BE BOLTED TO CONCRETE, STEEL, OR WOOD AS NEEDED PER APPLICATION.

ANCHOR BOLTS SHALL BE ½" DIAMETER ANCHOR BOLTS.

ANCHOR BOLTS SHALL SUSTAIN A MINIMUM ULTIMATE PULL–OUT LOAD OF AT LEAST 6,000 POUNDS.

WELDING SHALL BE PERFORMED BY A CERIFIFIED WELDER USING E–70XX ROD OR WIRE FEED.

MANHOLE SIZE (NOTE B)	
FORCEMAIN DIAMETER	MANHOLE DIAMETER
8"	4'–0"
18"	5'–0"
30"	8'–0"

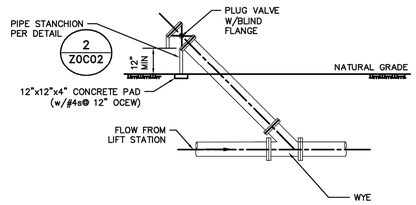

NOTES:

1. PROVIDE LINED DUCTILE IRON PIPE, THICK, CLASS 53, FOR FORCE MAIN WITHIN 12" OF OUTSIDE FACE OF MANHOLE. JOINTS WITHIN MANHOLE MAY BE FLANGED (AS SHOWN OR GROOVED (PER ASTM 606) WITHIN MANHOLE, WITH 316 STAINLESS STEEL BOLTS.
2. MANHOLE TOP MAY BE CONCENTRIC CONE, OR FLAT TOP WITH ECCENTRIC OPENING. PROVIDE 32" FRAME AND COVER.
3. ENSURE MIN CLEARANCE OF 18" ON ALL SIDES. OFFSET VALVE ON HATCH/MH OPENING AS NEEDED TO OBTAIN CLEARANCE.

A TETRA TECH COMPANY
Texas PE Firm Reg. #F-929
575 N. Dairy Ashford, Suite 700,
Houston, Texas 77079
T +1 281 589 7257
E usinfrastructure@rpsgroup.com

SURVEYED BY: KUO Inc.
FB NO. F–4578

This document is released for the purposes of interim review only under the authority of:

Neha Raval, P.E.
Texas P.E. No. 141506
09/11/2026

It is not to be used for bidding, construction, or permitting purposes.

CITY OF HOUSTON
HOUSTON PUBLIC WORKS

LIFT STATION REHABILITATION & RECONSTRUCTION

FORCE MAIN DETAILS
(SHEET 3 OF 4)
STD–C–26

WBS NUMBER	FOR CITY OF HOUSTON USE ONLY
R–000267–178A–3	
DRAWING SCALE	
AS NOTED	
CITY OF HOUSTON PM	
TAHA LOTIA	
SHEET NO. 92 OF 147	

FILE PATH: C:\Users\andres.martinezjr\DC\ACCDocs\Tetra Tech Inc\200-317106-24001 COH LS Rehab Design\Project Files\CAD\R-000267-178A-3\DETAILS P(3)TIFF.tif
PLOTTED: 09/09/2026 5:02 PM

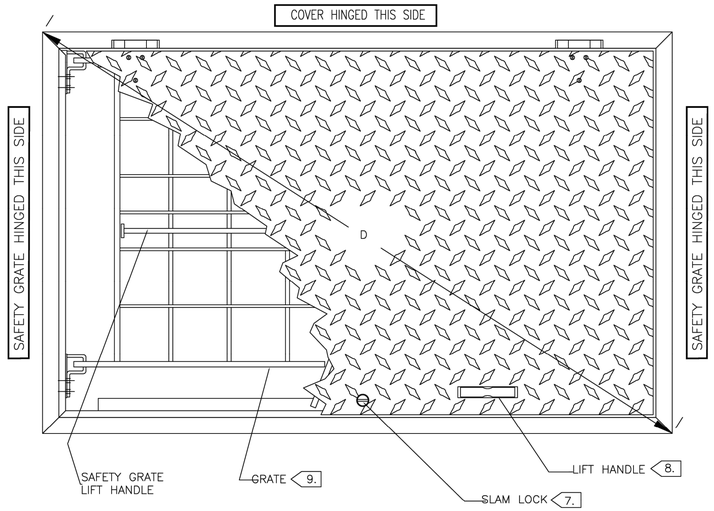

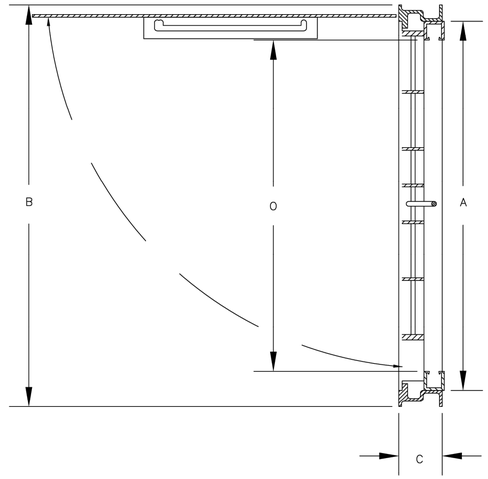

NOTE:
T.O.C. @ 46.20

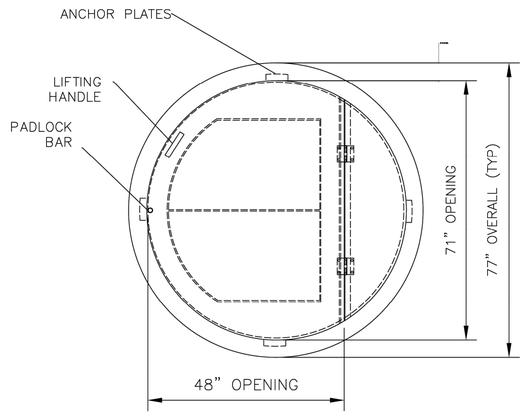

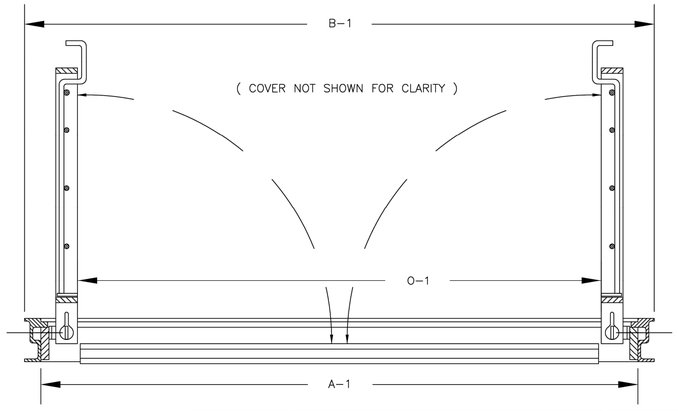

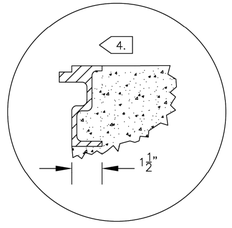

DETAIL B

DETAIL A

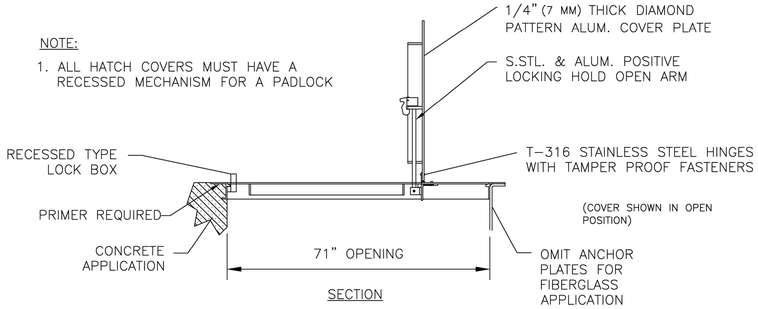

SECTION

PATTERN NO.	DIMENSIONS IN INCHES		UNOBSTRUCTED CLEAR OPENING	HEIGHT	DIAGONAL
ALUMINUM	A x A1	B x B1	O x O1	C	D
FLED–AOSH	PER MANUFACTURER	PER MANUFACTURER	MATCH EXISTING	PER MANUFACTURER	PER MANUFACTURER

1.) MATERIAL SHALL BE 6061–T6 ALUMINUM FOR BARS, ANGLES, AND EXTRUSIONS. 1/4" DIAMOND PLATE SHALL BE 5086 ALUMINUM. EXTERIOR OF FRAME WHICH COMES IN CONTACT WITH CONCRETE SHALL HAVE ONE COAT FOREST GREEN PAINT.

2.) UNIT DESIGNED PEDESTRIAN RATED FOR A MINIMUM LIVE LOAD OF 300 LBS./SQ.FT.

3.) DOOR SHALL BE EQUIPPED WITH A HOLD OPEN ARM. DOOR SHALL LOCK OPEN IN THE 90 DEGREE POSITION. HOLD OPEN ARM SHALL BE FASTENED TO THE FRAME WITH A 1/2" GRADE 316 STAINLESS STEEL BOLT.

4. ANGLE FRAME SHALL BE OF EXTRUDED ALUMINUM, WITH A CONTINUOUS 1–1/2" ANCHOR FLANGE.

5.) COVER HINGES SHALL BE OF HEAVY DUTY DESIGN. MATERIAL SHALL BE GRADE 316 STAINLESS STEEL. EACH HINGE SHALL HAVE A GRADE 316 STAINLESS STEEL, 3/8" DIAMETER HINGE PIN. HINGE SHALL BE FASTENED TO ANGLE AND DIAMOND PLATE WITH GRADE 316 STAINLESS STEEL BOLTS AND NY–LOCK NUTS.

6.) ALL HARDWARE SHALL BE STAINLESS STEEL.

7. EACH HATCH SHALL BE SUPPLIED WITH A GRADE 316 STAINLESS STEEL SLAM LOCK, WITH KEY WAY PROTECTED BY A THREADED PLUG. PLUG SHALL BE FLUSH WITH THE TOP OF THE 1/4" DIAMOND PLATE. SLAM LOCK SHALL BE FASTENED WITH FOUR GRADE 316 STAINLESS STEEL BOLTS AND WASHERS.

8. EACH HATCH SHALL BE EQUIPPED WITH AN ALUMINUM LIFT HANDLE. THE LIFT HANDLE SHALL BE FLUSH WITH THE TOP OF THE 1/4" DIAMOND PLATE.

9. UNITS SHALL BE SUPPLIED WITH A HINGED SAFETY GRATES (SAFETY YELLOW) TO PROVIDE PROTECTION AGAINST FALL THROUGH AND TO CONTROL ACCESS TO THE CONFINED SPACE. (SEE SAFETY GRATE SPECIFICATIONS ON SEPARATE PAGE.)

10.) HATCH COVERS SHALL BE PAINTED FOREST GREEN TO DEMARCATE AND PREVENT VANDALISM.

LIFT STATION WET WELL AND SPLITTER BOX HATCHES

SOURCE: ITT/FLYGT

STANDARD FEATURES:

- AUTO–LOCK T–316 STAINLESS STEEL HOLD OPEN ARM WITH RELEASE HANDLE
- T–316 STAINLESS STEEL HINGES AND ATTACHING HARDWARE
- NON–CORROSIVE LOCKING BAR
- SINGLE LEAF CONSTRUCTION FOR MAXIMUM ACCESS
- 300 LBS. PER SQ. FT. LOAD RATING (1464 KG. PER SQ. METER LOAD RATING)
- EXTRUDED ALUMINUM FRAME
- RECESSED LIFTING HANDLE
- ANCHOR PLATES (ORDER WITHOUT FOR FIBERGLASS OR DROP–IN INSTALLATIONS)
- LIFETIME GUARANTEE
- COVERED FRAME PAINTED FOREST GREEN
- PROVIDE ACCESS HATCH DOOR WITH RECESSED (PATERNAL) TYPE PADLOCK CLIPS. EXPOSED PADLOCK CLIP NOT ALLOWED.

STANDARD SIZES					
QTY.	MODEL NO.	A DIM. INCHES (MM)	B DIM. INCHES (MM)	C DIM. INCHES (MM)	UNIT WT. LBS. (KG.)
1	R1R72	48 (1219)	71 (1803)	77 (1956)	175 (79)

FORCE MAIN BYPASS MANHOLE HATCH

SOURCE: HALLIDAY PRODUCTS
PHONE: 1 (800) 298–1027

RPS A TETRA TECH COMPANY
Texas PE Firm Reg. #F-929
575 N. Dairy Ashford, Suite 700,
Houston, Texas 77079
T +1 281 589 7257
E usinfrastructure@rpsgroup.com

SURVEYED BY: KUO Inc.
FB NO. F–4578

This document is released for the purposes of interim review only under the authority of:

Neha Raval, P.E.
Texas P.E. No. 141506
09/11/2026

It is not to be used for bidding, construction, or permitting purposes.

CITY OF HOUSTON
HOUSTON PUBLIC WORKS

LIFT STATION REHABILITATION & RECONSTRUCTION

FORCE MAIN DETAILS
(SHEET 4 OF 4)
STD–C–27

WBS NUMBER	FOR CITY OF HOUSTON USE ONLY
R–000267–178A–3	
DRAWING SCALE	
AS NOTED	
CITY OF HOUSTON PM	
TAHA LOTIA	
SHEET NO. 93 OF 147	

FILE PATH: C:\Users\andres.martinezjr\DC\ACCDocs\Tetra Tech Inc\200-317106-24001 COH LS Rehab Design\Project Files\CAD\R-000267-178A-3-STD-C-27 DETAILS.dgn
PLOTTED: 09/30/2026 5:02 PM

DocuSign Envelope ID: CB71C116-B716-4899-A5EE-0D2F2CC55AF6

GENERAL NOTES

1. THE CONTRACTOR SHALL PROVIDE AND INSTALL TRAFFIC CONTROL DEVICES IN CONFORMANCE WITH PART VI OF THE TEXAS MANUAL ON UNIFORM TRAFFIC CONTROL DEVICES (TMUTCD) LATEST EDITION WITH REVISIONS DURING THE ENTIRE CONSTRUCTION PERIOD. CONTRACTOR'S TRAFFIC CONTROL PLAN TO BE STAMPED BY PROFESSIONAL ENGINEER LICENSED IN THE STATE OF TEXAS.
2. ALL SIGNS AND TRAFFIC CONTROL DEVICES SHALL CONFORM THE LATEST VERSION OF THE TMUTCD.
3. NO LANES SHALL BE CLOSED DURING THE HOURS OF 7:00 AM TO 9:00 AM AND 4:00 PM TO 6:00 PM MONDAY THRU FRIDAY WITHOUT APPROVAL OF THE CITY TRAFFIC ENGINEER.
4. NO WORK SHALL BE PERFORMED IN RESIDENTIAL AREAS FROM 7:00 PM TO 7:00 AM.
5. CONTRACTOR SHALL MAINTAIN APPROVED NUMBER OF THROUGH LANES OF TRAFFIC IN EACH DIRECTION DURING CONSTRUCTION WORKING HOURS. TRAFFIC CONTROL PLANS SHALL INCLUDE ONE-WAY AND/OR DETOUR PLANS. CONTRACTOR SHALL MAINTAIN ADA COMPLIANT PEDESTRIAN ACCESS TO BUS STOPS AND ADEQUATE BUS ACCESS TO ALL THE BUS STOPS.
6. CONTRACTOR SHALL MAINTAIN TRAFFIC LANES AND DETOURS ACCORDING TO TRAFFIC CONTROL PLANS DURING WORKING HOURS.
7. CONTRACTOR SHALL COVER OPEN PAVEMENT EXCAVATIONS FOR MINOR UTILITY WORK WITH ANCHORED STEEL PLATES DURING NON-WORKING HOURS, AND OPEN LANES FOR NORMAL TRAFFIC FLOW WHEN FEASIBLE.
8. IF THE CONTRACTOR CHOOSES TO USE A DIFFERENT METHOD OF "TRAFFIC CONTROL PLANS" DURING THE CONSTRUCTION THAN WHAT IS OUTLINED IN THE CONTRACT DRAWINGS, THE CONTRACTOR SHALL BE RESPONSIBLE TO PREPARE AND SUBMIT AN ALTERNATE SET OF TRAFFIC CONTROL PLANS TO THE CITY OF HOUSTON PROJECT MANAGER FOR APPROVAL TEN WORKING DAYS PRIOR TO IMPLEMENTATION. THESE PLANS SHALL BE DRAWN TO SCALE ON REPRODUCIBLE MYLARS AND SHALL BE SEALED BY A LICENSED ENGINEER IN THE STATE OF TEXAS. OFFICE OF CITY ENGINEER, MOBILITY PERMITS SECTION REPRESENTATIVE APPROVAL IS REQUIRED TO ACCEPT THE PROPOSED CHANGES.
9. CONTRACTOR SHALL SECURE LANE/SIDEWALK/BICYCLE FACILITY CLOSURE PERMITS FROM OFFICE OF CITY ENGINEER (MOBILITY PERMIT SECTION AT https://geohub.houstontx.gov) BEFORE IMPLEMENTING THE TRAFFIC CONTROL PLAN. THE APPLICATION MUST BE SUBMITTED AT LEAST TEN DAYS PRIOR TO THE IMPLEMENTATION OF THE TRAFFIC CONTROL PLAN AND/OR BEGINNING CONSTRUCTION WORK. THE CONTRACTOR SHALL PROVIDE TRAFFIC CONTROL PLANS, CONSTRUCTION SEQUENCING, AND CONSTRUCTION SCHEDULE WITH THE APPLICATION.
10. CONTRACTOR SHALL HAVE APPROVED TRAFFIC CONTROL PLAN AND PERMIT AT THE JOB SITE FOR INSPECTION AT ALL TIMES.
11. DURING PAVEMENT SURFACE RESTORATION PROJECTS; THE CONTRACTOR SHALL NOT OPEN CLOSED LANES UNTIL THE PAVEMENT SURFACE HAS CURED ENOUGH TO ALLOW VEHICULAR TRAFFIC ACCORDING TO CITY OF HOUSTON STANDARD SPECIFICATIONS.
12. THE CONTRACTOR IS RESPONSIBLE FOR SCHEDULING AND COORDINATING ALL CONSTRUCTION ACTIVITIES WITH STAKE HOLDERS IN THE VICINITY INCLUDING EMERGENCY RESPONSE AGENCIES SUCH AS HOUSTON POLICE DEPARTMENT, HOUSTON FIRE DEPARTMENT, AND METROPOLITAN TRANSIT AUTHORITY.
13. CONTRACTOR SHALL BE RESPONSIBLE FOR ISSUING ALL WORK DIRECTIVES TO ALL SUB-CONTRACTORS, UTILITY COMPANIES, AND ALL OTHER ENTITIES PERFORMING CONSTRUCTION WORK ASSOCIATED WITH THE PROJECT.
14. NOTHING IN THESE NOTES OR PLANS SHALL RELIEVE THE CONTRACTOR OF THE RESPONSIBILITY FOR JOB SITE CONDITIONS DURING THE COURSE OF CONSTRUCTION OF THE PROJECT; INCLUDING SAFETY OF ALL MODES OF TRANSPORTATION, PERSONS, AND PROPERTY, AND THAT THIS REQUIREMENT SHALL APPLY CONTINUOUSLY AND NOT BE LIMITED TO WORKING HOURS.
15. THE OFFICE OF CITY ENGINEER (MOBILITY PERMITS GROUP) PER THE DIRECTION OF THE CITY TRAFFIC ENGINEER HAVE THE RIGHT TO DEMAND THE INSTALLATION OF ADDITIONAL TRAFFIC CONTROL DEVICES OR MODIFICATIONS OF THESE PLANS AND NOTES, AS DEEMED NECESSARY TO PROMOTE THE SAFE AND ORDERLY FLOW OF TRAFFIC, INCLUDING PEDESTRIANS AND BICYCLES, THROUGH THE CONSTRUCTION WORK ZONE. THE CONTRACTOR SHALL COMPLY WITH THESE ADDITIONAL REQUESTS OR MODIFICATIONS WITH DUE DILIGENCE.
16. ALL EXISTING TRAFFIC CONTROL SIGNS AND PAVEMENT MARKINGS SHALL BE MAINTAINED IN VISIBLE LOCATIONS DURING CONSTRUCTION UNLESS PRIOR WRITTEN APPROVAL IS OBTAINED FROM CITY OF HOUSTON PROJECT MANAGER. THE CONTRACTOR SHALL RESTORE OR REPLACE (AT THE DISCRETION OF THE CITY TRAFFIC ENGINEER) ANY PAVEMENT MARKING OR SIGNING DAMAGE DURING CONSTRUCTION OPERATIONS, INCLUDING RAISED PAVEMENT MARKERS (RPMS).
17. WHEN ENTERING OR LEAVING ROADWAYS CARRYING PUBLIC TRAFFIC, THE CONTRACTOR'S EQUIPMENT, WHETHER EMPTY OR LOADED SHALL IN ALL CASES YIELD TO PUBLIC TRAFFIC WITH THE ASSISTANCE OF CONTRACTOR PROVIDED CERTIFIED FLAGGER/PEACE OFFICER.
18. ACCESS TO DRIVEWAYS ADJACENT TO THE CONSTRUCTION WORK ZONE SHALL BE MAINTAINED AT ALL TIMES AS MUCH AS POSSIBLE. ADDITIONAL CONES AND/OR DELINEATORS MAY BE REQUIRED TO DELINEATE THE DRIVEWAY ACCESS ROUTE THROUGH THE CONSTRUCTION WORK ZONE. A MINIMUM OF ONE TRAVEL LANE SHALL BE MAINTAINED ACROSS THE DRIVEWAYS, UNLESS PRIOR WRITTEN APPROVAL IS OBTAINED FROM CITY OF HOUSTON PROJECT MANAGER. CONTRACTOR TO ADD STABILIZED CONSTRUCTION ENTRANCE AS NEEDED AT NO ADDITIONAL COST TO OWNER.
19. SPILLAGE RESULTING FROM HAULING OPERATIONS ALONG OR ACROSS ANY PUBLIC TRAVELED WAY SHALL BE REMOVED IMMEDIATELY BY THE CONTRACTOR.
20. THE CONTRACTOR SHALL SUBMIT AN APPLICATION FOR TEMPORARY PARKING RESTRICTIONS IF THERE ARE PARKING METERS LOCATED AT THE PROPOSED LANE CLOSURES FROM PARKING MANAGEMENT DIVISION (832-393-8690) AT LEAST TEN BUSINESS DAYS BEFORE IMPLEMENTATION OF LANE CLOSURES. IN ADDITION, TEMPORARY NO PARKING SIGNS SHALL BE POSTED 24 HOURS PRIOR TO COMMENCEMENT OF WORK.
21. ADDITIONAL OFF DUTY OFFICERS/FLAGGERS MAY BE REQUESTED TO DIRECT TRAFFIC WHEN LANES ARE BLOCKED AT THE DISCRETION OF THE CITY PROJECT MANAGER EVEN IF THEY ARE NOT SPECIFICALLY IDENTIFIED ON THE PROJECT PLANS.
22. THE CONTRACTOR SHALL REPLACE WITHIN 72 HOURS, ALL TRAFFIC SIGNAL LOOP DETECTORS DAMAGED DURING CONSTRUCTION.
23. IN GENERAL, A SOLAR POWERED FLASHING ARROW BOARD SHALL BE REQUIRED ON ALL MAJOR THOROUGHFARE LANES CLOSURES. EXCEPTIONS TO FLASHING ARROW BOARDS AND/OR IMPLEMENTATION ON RESIDENTIAL LANE CLOSURES SHALL BE APPROVED BY CITY TRAFFIC ENGINEER.
24. APPROVED TRAFFIC CONTROL PLAN SHALL BE IN PLACE BEFORE STARTING ANY EXCAVATION.
25. WATER FILLED BARRIERS CAN BE USED AS INSTRUCTED BY THE ENGINEER AND APPROVED BY THE CITY FOR PROJECTS WHERE SPACE IS LIMITED AND HEAVY EQUIPMENT TO PLACE CONCRETE BARRIERS IS NOT FEASIBLE. WATER FILLED BARRIERS SHALL NOT BE USED ON ROADWAYS WITH A POSTED SPEED LIMIT MORE THAN 45 MPH.
26. WATER FILLED BARRIERS MUST BE INSTALLED AND MAINTAINED PER THE MANUFACTURER'S REQUIREMENTS AND ROUTINELY INSPECTED FOR DEFECTS.
27. IF WATER FILLED BARRIER IS PROVIDED, USE ENVIRONMENTALLY SAFE ANTI-FREEZING AGENT IN THE WATER WHEN IT IS APPLICABLE PER MANUFACTURER SPECIFICATIONS AND RECOVER AGENT WHEN THE BARRIER IS DRAINED.
28. DISPOSE OF WATER AND AGENT PROPERLY. DO NOT DRAIN WATER FILLED BARRIER INTO OR ACROSS AN EXISTING TRAVEL LANE.
29. PROVIDE BARRIER UNITS THAT ARE CAPABLE OF BEING LIFTED AND MOVED WHEN FILLED IF DRAINING IS NOT POSSIBLE.
30. PROVIDE WATER FILLED BARRIER THAT ACTS AS ITS OWN FREE STANDING, NON-REDIRECTIVE END TREATMENT.
31. WHEN WATER FILLED BARRIERS ARE USED TO CHANNELIZE PEDESTRIANS, THEY MUST HAVE A CONTINUOUS DETECTABLE BOTTOM FOR USERS OF LONG CANES AND THE TOP OF THE UNIT SHALL NOT BE LESS THAN 32 INCHES IN HEIGHT.
32. ANY CLOSURE OF A PEDESTRIAN OR BICYCLE FACILITY SHALL REQUIRE THE SHORTEST DETOUR THAT MAINTAINS THE SAFETY OF PEDESTRIAN AND/OR BICYCLISTS.

SPACING FOR CHANNELIZING DEVICES

A. PLASTIC DRUMS ON MERGING TAPER @ 30' C – C WITH CHEVRON SIGN @ 60' C – C AND WARNING LIGHTS FOR OVERNIGHT CLOSURE.

B. PLASTIC DRUMS ON DOWNSTREAM TAPER @ 30' C – C (RETURN TAPER AND BARRICADE ARE OPTIONAL AND DIVIDED ROADWAY SECTION)

C. PLASTIC DRUMS ON RADII @ 35' C –C.

D. PLASTIC DRUMS ON TANGENT @ 35' C – C WITH VERTICAL PANEL AT 70' C – C AND APPROVED WARNING LIGHT @ 70' C – C (FOR OVERNIGHT CLOSURE).

E. PLASTIC DRUMS IN FRONT OF CONSTRUCTION ZONE @ 20' C – C WITH VERTICAL PANEL AT 40' C – C AND APPROVED WARNING LIGHT @ 40' C – C (FOR OVERNIGHT CLOSURE).

F. CONCRETE TRAFFIC BARRIER (CTB) OR LOW PROFILE CONCRETE TRAFFIC BARRIER (LPCTB) WITH APPROVED REFLECTORS @ 10' C – C IF PAVEMENT DROP IS GREATER THAN 1 FOOT.

G. PLASTIC DRUMS W/GUARD RAIL MOUNTED.

H. SELF- RIGHTING VERTICAL PANEL SPACING.
- 4 LANES TO 2 LANES UNDIVIDED ROADWAY SECTION @ 20' C – C.
- 4 LANES DIVIDED ROADWAY TO ONE SIDE TWO WAY ROADWAY @ 20' C – C.
- LEFT LANE AND RIGHT LANE STORAGE BAYS @ 15' C – C.

I. SPACING SHOWN ON TRAFFIC CONTROL SHALL SUPERSEDE THE ABOVE SPACING.

J. SPACING MAY BE ADJUSTED TO PROVIDE DRIVEWAYS, INTERSECTIONS AND /OR MEDIAN OPENINGS.

TABLE C3 – TYPICAL SIGN SPACING, TAPER LENGTHS, AND SUGGESTED SPACING OF CHANNELIZATION DEVICES

POSTED SPEED (MPH)	SIGN SPACING "X" (FEET)	MIN. DESIRABLE TAPER LENGTH "L"			SUGGESTED MAXIMUM SPACING OF DEVICE	
		10' OFFSET	11' OFFSET	12' OFFSET	ON A TAPER	ON A TANGENT
30	120'	150'	165'	180'	30'	60'–75'
35	160'	205'	225'	245'	35'	70'–90'
40	240'	265'	295'	320'	40'	80'–100'
45	320'	450'	495'	540'	45'	90'–110'
50	400'	500'	550'	600'	50'	100'–125'
55	500'	550'	605'	660'	55'	110'–140'

TABLE C4 – STOPPING SIGHT DISTANCE AS A FUNCTION OF SPEED

POSTED SPEED (MPH)	DISTANCE "D" (FEET)
30	200
35	250
40	305
45	360
50	425
55	495

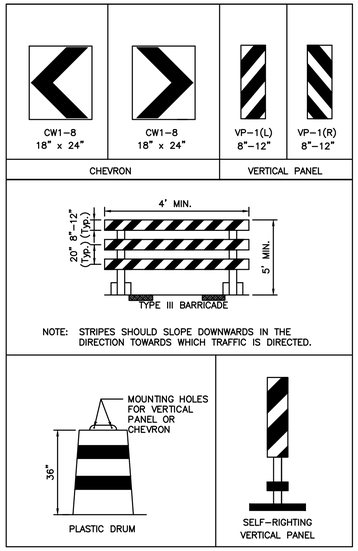

CHANNELIZATION AND BARRICADES

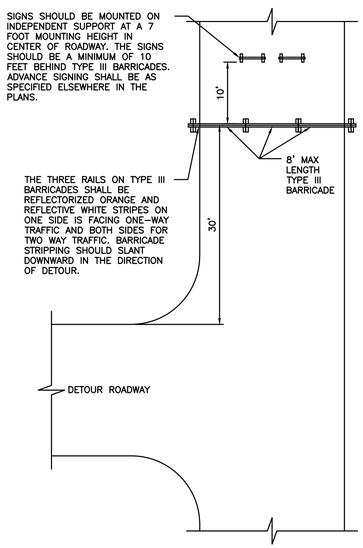

PLAN VIEW
TYPE III BARRICADE (POST AND SKID)
TYPICAL APPLICATION

LEGEND:

- SIGN
- FLAGGER
- APPROVED CHANNELIZATION DEVICE
- BARRICADE
- FLASHING ARROW PANEL
- AREA UNDER CONSTRUCTION
- EXISTING TRAVEL WAY
- TRAFFIC CONTROL PLAN DETOUR TRAVEL WAY

APPROVED BY:	APPROVED BY:
DocuSigned by: Suhail Kanwar 8EF880C6415748...	DocuSigned by: HANG NGUYEN 86A28EFDA7584CD...
CITY ENGINEER	CITY TRAFFIC ENGINEER
APPROVED BY:	
DIRECTOR OF HOUSTON PUBLIC WORKS	
EFF DATE: NOV–27–2023	DWG NO: 01555–01

CITY OF HOUSTON
HOUSTON PUBLIC WORKS STANDARD

TCP NOTES CHANNELIZING DEVICES AND BARRICADES

	FOR CITY OF HOUSTON USE ONLY
DRAWING SCALE	
NOT TO SCALE	

RPS
A TETRA TECH COMPANY
Texas PE Firm Reg. #F-929
575 N. Dairy Ashford, Suite 700,
Houston, Texas 77079
T +1 281 589 7257
E usinfrastructure@rpsgroup.com

SURVEYED BY: KUO Inc.
FB NO. F–4578

This document is released for the purposes of interim review only under the authority of:

Jeremy Austin, P.E.
Texas P.E. No. 116816
09/11/2026

It is not to be used for bidding, construction, or permitting purposes.

CITY OF HOUSTON
HOUSTON PUBLIC WORKS

LIFT STATION REHABILITATION & RECONSTRUCTION

TRAFFIC CONTROL DETAILS
(SHEET 1 OF 15)
STD–C–28

WBS NUMBER	FOR CITY OF HOUSTON USE ONLY
R–000267–178A–3	
DRAWING SCALE	
AS NOTED	
CITY OF HOUSTON PM	
TAHA LOTIA	
SHEET NO. 94 OF 147	

DISCLAIMER:
THE USE OF THIS STANDARD IS GOVERNED BY THE TEXAS ENGINEERING PRACTICE ACT. THE DESIGN REQUIREMENTS ON THIS STANDARD DO NOT PURPORT TO ADDRESS ALL OF THE SAFETY CONCERNS ASSOCIATED WITH THEIR USE. THE ENGINEER OF RECORD (EOR) IS TO REVIEW THESE DESIGN REQUIREMENTS AND BY AUTHORIZING THEIR USE, ACCEPTS RESPONSIBILITY FOR THEIR APPLICABILITY, ADEQUACY AND SAFETY; NO WARRANTY OF ANY KIND IS MADE BY THE CITY OF HOUSTON FOR ANY PURPOSES WHATSOEVER. THE CITY OF HOUSTON ASSUMES NO RESPONSIBILITY FOR INCORRECT RESULTS OR DAMAGES RESULTING FROM ITS USE.

FILE PATH: C:\Users\andres.martinezjr\DC\ACCDocs\Tetra Tech Inc\200-317106-24001 COH LS Rehab Design\Project Files\CAD\R-000267-178A-3_TCP_NOTES_CHANNELIZING_DEVICES_AND_BARRICADES.dgn
PLOT DATE: 9/9/2026 3:02:21 PM

ign Envelope ID: CB71C116-B716-4899-A5EE-0D2F2CC55AF6

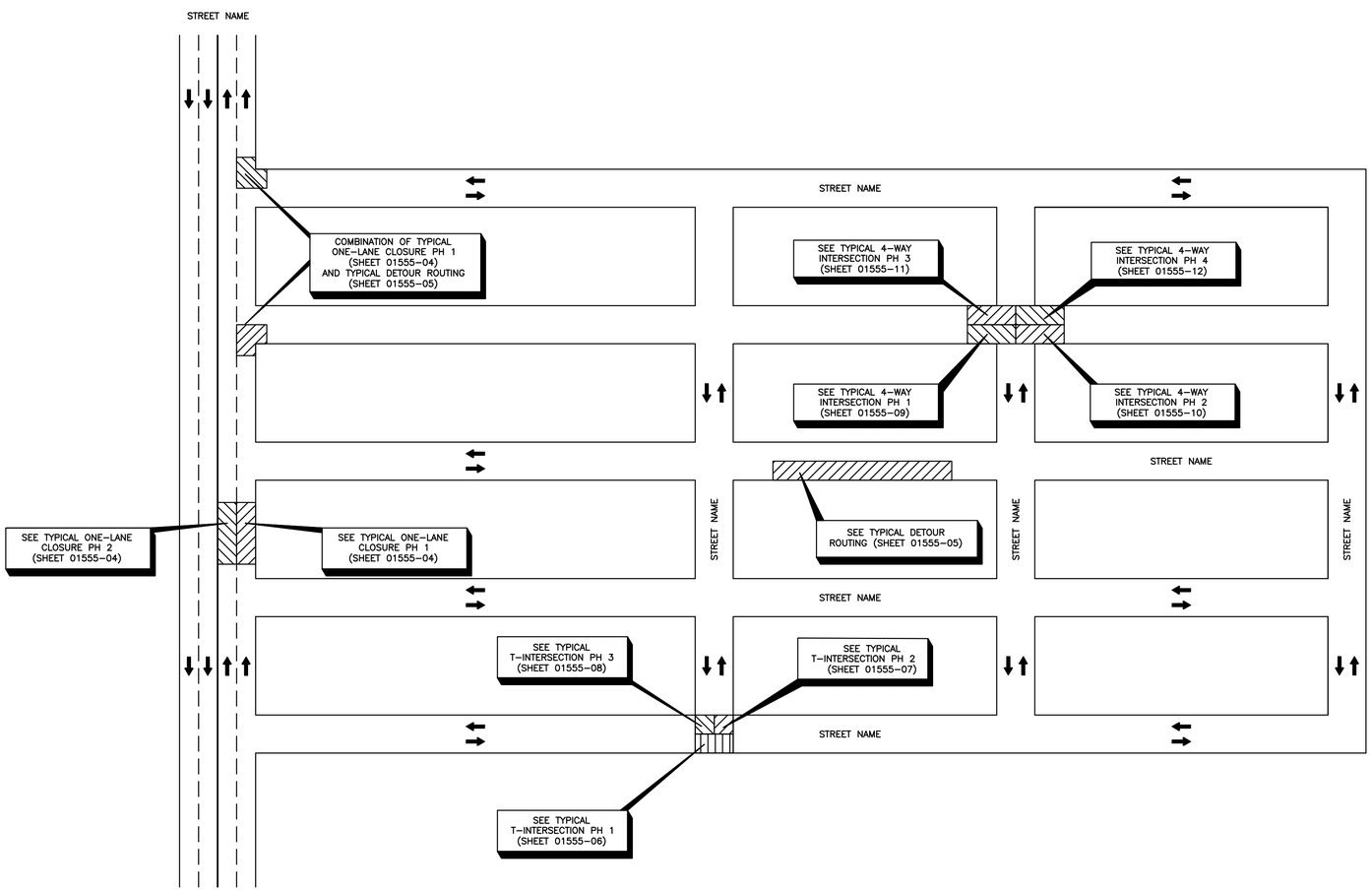

APPROVED BY:	APPROVED BY:
Docu Signed by: Suhail Kanwar 9EF8B0C6419547B...	Docu Signed by: KHANG NGUYEN 95A39EFDA7B84CD...
CITY ENGINEER	CITY TRAFFIC ENGINEER
APPROVED BY:	
DIRECTOR OF HOUSTON PUBLIC WORKS	
EFF DATE: NOV-27-2023	DWG NO: 01555-02

CITY OF HOUSTON
HOUSTON PUBLIC WORKS STANDARD

TCP OVERALL TRAFFIC CONTROL LAYOUT

FOR CITY OF HOUSTON USE ONLY

DRAWING SCALE
NOT TO SCALE

rps
A TETRA TECH COMPANY
Texas PE Firm Reg. #F-929
575 N. Dairy Ashford, Suite 700,
Houston, Texas 77079
T +1 281 589 7257
E usinfrastructure@rpsgroup.com

This document is released for the purposes of interim review only under the authority of:

Jeremy Austin, P.E.
Texas P.E. No. 116816
09/11/2026

It is not to be used for bidding, construction, or permitting purposes.

SURVEYED BY: KUO Inc.
FB NO. F-4578

CITY OF HOUSTON
HOUSTON PUBLIC WORKS

LIFT STATION REHABILITATION & RECONSTRUCTION

TRAFFIC CONTROL DETAILS
(SHEET 2 OF 15)
STD-C-29

WBS NUMBER	FOR CITY OF HOUSTON USE ONLY
R-000267-178A-3	
DRAWING SCALE	
AS NOTED	
CITY OF HOUSTON PM	
TAHA LOTIA	
SHEET NO. 95 OF 147	

DISCLAIMER:
THE USE OF THIS STANDARD IS GOVERNED BY THE TEXAS ENGINEERING PRACTICE ACT. THE DESIGN REQUIREMENTS ON THIS STANDARD DO NOT PURPORT TO ADDRESS ALL OF THE SAFETY CONCERNS ASSOCIATED WITH THEIR USE. THE ENGINEER OF RECORD (EOR) IS TO REVIEW THESE DESIGN REQUIREMENTS AND BY AUTHORIZING THEIR USE, ACCEPTS RESPONSIBILITY FOR THEIR APPLICABILITY, ADEQUACY AND SAFETY. NO WARRANTY OF ANY KIND IS MADE BY THE CITY OF HOUSTON FOR ANY PURPOSES WHATSOEVER. THE CITY OF HOUSTON ASSUMES NO RESPONSIBILITY FOR INCORRECT RESULTS OR DAMAGES RESULTING FROM ITS USE.

FILE PATH: C:\Users\andres.martinezjr\DC\ACCDocs\Tetra Tech Inc\200-317106-24001 COH LS Rehab Design\Project Files\CAD\R-000267-178A-3\Sheet Files\TRAFFIC CONTROL DETAILS\SHEET 2 OF 15.dwg

DocuSign Envelope ID: CB71C116-B716-4899-A5EE-0D2F2CC55AF6

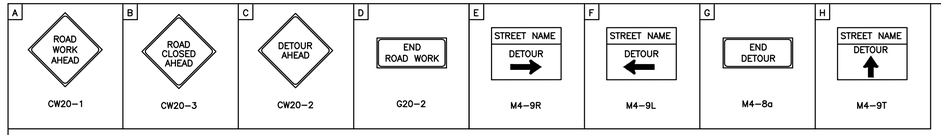

LEGEND:

- SIGN
- FLAGGER
- APPROVED CHANNELIZATION DEVICE
- BARRICADE
- FLASHING ARROW PANEL
- AREA UNDER CONSTRUCTION
- EXISTING TRAVEL WAY
- TRAFFIC CONTROL PLAN DETOUR TRAVEL WAY

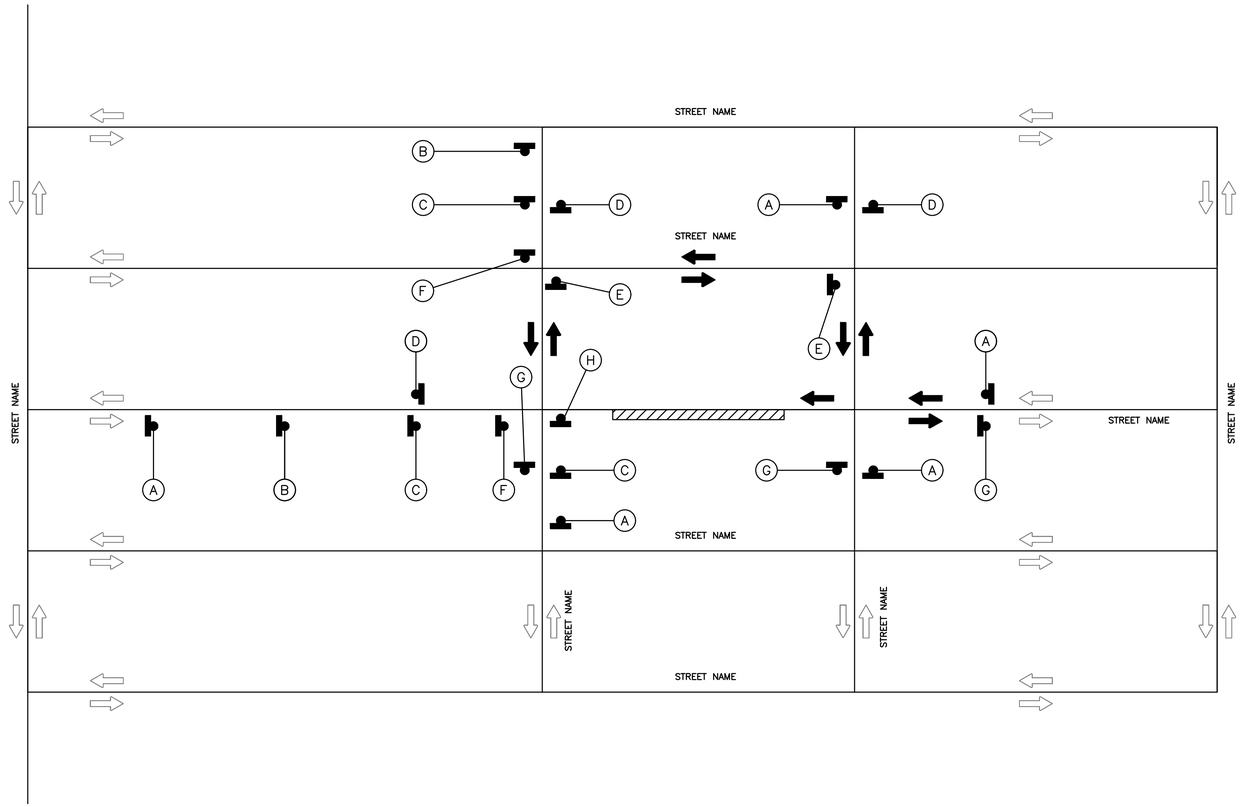

APPROVED BY:	APPROVED BY:
DocuSigned by: Suhail Kanwar 9EF8B0C641F5478...	DocuSigned by: KHANG NGUYEN 95A29EFDA75B4CD...
CITY ENGINEER	CITY TRAFFIC ENGINEER
APPROVED BY:	
DIRECTOR OF HOUSTON PUBLIC WORKS	
EFF DATE: NOV-27-2023	DWG NO: 01555-03

CITY OF HOUSTON
HOUSTON PUBLIC WORKS STANDARD

TRAFFIC CONTROL LAYOUT

FOR CITY OF HOUSTON USE ONLY

DRAWING SCALE
NOT TO SCALE

rps
A TETRA TECH COMPANY
Texas PE Firm Reg. #F-929
575 N. Dairy Ashford, Suite 700,
Houston, Texas 77079
T +1 281 589 7257
E usinfrastructure@rpsgroup.com

This document is released for the purposes of interim review only under the authority of:

Jeremy Austin, P.E.
Texas P.E. No. 116816
09/11/2026

It is not to be used for bidding, construction, or permitting purposes.

SURVEYED BY: KUO Inc.
FB NO. F-4578

CITY OF HOUSTON
HOUSTON PUBLIC WORKS

LIFT STATION REHABILITATION & RECONSTRUCTION

TRAFFIC CONTROL DETAILS
(SHEET 3 OF 15)
STD-C-29

WBS NUMBER	FOR CITY OF HOUSTON USE ONLY
R-000267-178A-3	
DRAWING SCALE	
AS NOTED	
CITY OF HOUSTON PM	
TAHA LOTIA	
SHEET NO. 96 OF 147	

DISCLAIMER:
THE USE OF THIS STANDARD IS GOVERNED BY THE TEXAS ENGINEERING PRACTICE ACT. THE DESIGN REQUIREMENTS ON THIS STANDARD DO NOT PURPORT TO ADDRESS ALL OF THE SAFETY CONCERNS ASSOCIATED WITH THEIR USE. THE ENGINEER OF RECORD (EOR) IS TO REVIEW THESE DESIGN REQUIREMENTS AND BY AUTHORIZING THEIR USE, ACCEPTS RESPONSIBILITY FOR THEIR APPLICABILITY, ADEQUACY AND SAFETY. NO WARRANTY OF ANY KIND IS MADE BY THE CITY OF HOUSTON FOR ANY PURPOSES WHATSOEVER. THE CITY OF HOUSTON ASSUMES NO RESPONSIBILITY FOR INCORRECT RESULTS OR DAMAGES RESULTING FROM ITS USE.

FILE PATH: C:\Users\andres.martinezjr\DC\ACCDocs\Tetra Tech Inc\200-317106-24001 COH LS Rehab Design\Project Files\CAD\R-000267-178A-3\Sheet Files\TRAFFIC CONTROL DETAILS (SHEET 3 OF 15)

DocuSign Envelope ID: CB71C116-B716-4899-A5EE-0D2F2CC55AF6

A	D	I	J
CW20-1	G20-2	AHEAD CW20-5(2) CW16-3	AHEAD CW20-5(1) CW16-3

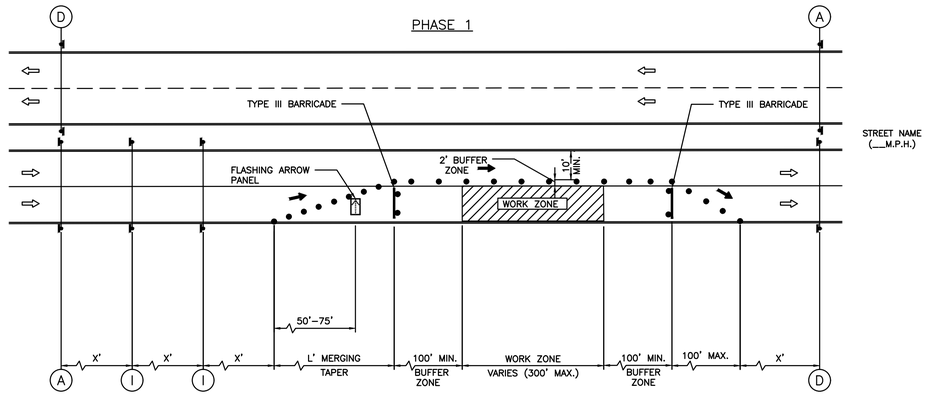

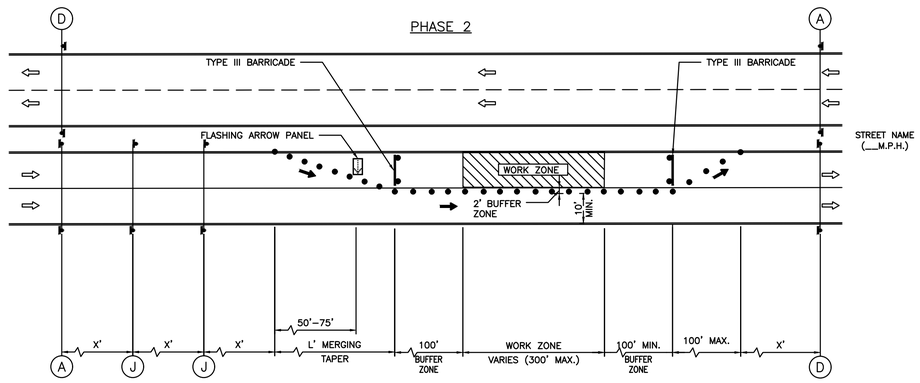

LEGEND:

- SIGN
- FLAGGER
- APPROVED CHANNELIZATION DEVICE
- BARRICADE
- FLASHING ARROW PANEL
- AREA UNDER CONSTRUCTION
- EXISTING TRAVEL WAY
- TRAFFIC CONTROL PLAN DETOUR TRAVEL WAY

NOTES:

1. RETURN TAPERS AND DOWNSTREAM BARRICADES ARE OPTIONAL ON A DIVIDED ROADWAY SECTION.
2. DOUBLE SIGNS SHALL BE USED ONLY ON ROADWAYS WITH MEDIANS.
3. FOR DIMENSIONS REFER TO SHEET 01555-01.
4. INSTALL FLASHERS ON DRUMS WHERE REQUIRED AND APPROVED BY CITY TRAFFIC ENGINEER.

APPROVED BY:	APPROVED BY:
DocuSigned by: Sukut Kanwar 9EFB80C841F5478...	DocuSigned by: TAHA NGUYEN 95A39E7DA758404D...
CITY ENGINEER	CITY TRAFFIC ENGINEER
APPROVED BY: DocuSigned by: Carol Haddock 4A9C410B7B3A4E5...	
DIRECTOR OF HOUSTON PUBLIC WORKS	
EFF DATE: NOV-27-2023	DWG NO: 01555-04

CITY OF HOUSTON
HOUSTON PUBLIC WORKS STANDARD

TCP ONE LANE CLOSURE
PHASE 1 & 2

	FOR CITY OF HOUSTON USE ONLY
DRAWING SCALE	
NOT TO SCALE	

A TETRA TECH COMPANY
Texas PE Firm Reg. #F-929
575 N. Dairy Ashford, Suite 700,
Houston, Texas 77079
T +1 281 589 7257
E usinfrastructure@rpsgroup.com

This document is released for the purposes of interim review only under the authority of:

Jeremy Austin, P.E.
Texas P.E. No. 116816
09/11/2026

It is not to be used for bidding, construction, or permitting purposes.

SURVEYED BY: KUO Inc.
FB NO. F-4578

CITY OF HOUSTON
HOUSTON PUBLIC WORKS

LIFT STATION REHABILITATION & RECONSTRUCTION

TRAFFIC CONTROL DETAILS
(SHEET 4 OF 15)
STD-C-31

WBS NUMBER	FOR CITY OF HOUSTON USE ONLY
R-000267-178A-3	
DRAWING SCALE	
AS NOTED	
CITY OF HOUSTON PM	
TAHA LOTIA	
SHEET NO. 97 OF 147	

DISCLAIMER:
THE USE OF THIS STANDARD IS GOVERNED BY THE TEXAS ENGINEERING PRACTICE ACT. THE DESIGN REQUIREMENTS ON THIS STANDARD DO NOT PURPORT TO ADDRESS ALL OF THE SAFETY CONCERNS ASSOCIATED WITH THEIR USE. THE ENGINEER OF RECORD (EOR) IS TO REVIEW THESE DESIGN REQUIREMENTS AND BY AUTHORIZING THEIR USE, ACCEPTS RESPONSIBILITY FOR THEIR APPLICABILITY, ADEQUACY, AND SAFETY. NO WARRANTY OF ANY KIND IS MADE BY THE CITY OF HOUSTON FOR ANY PURPOSES WHATSOEVER. THE CITY OF HOUSTON ASSUMES NO RESPONSIBILITY FOR INCORRECT RESULTS OR DAMAGES RESULTING FROM ITS USE.

FILE PATH: C:\Users\andres.martinezjr\DC\ACCDocs\Tetra Tech Inc\200-317106-24001 COH LS Rehab Design\Project Files\CAD\R-000267-178A-3_TRAFFIC CONTROL DEPARTMENT\SHEETS\01555-04.dwg

DocuSign Envelope ID: CB71C116-B716-4899-A5EE-0D2F2CC55AF6

A	B	C	D	E	F	G	H	I	J
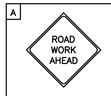		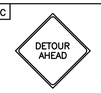							
CW20-1	CW20-3	CW20-2	G20-2	M4-9R	M4-9L	M4-8a	M4-9T	CW20-5(2) CW16-3	CW20-5(1) CW16-3
K	L	M	N	O	P	Q	R		
R6-2(L)	R6-2(R)	R5-1	R11-2	M4-10(L)	R3-1	R3-2	R6-6		

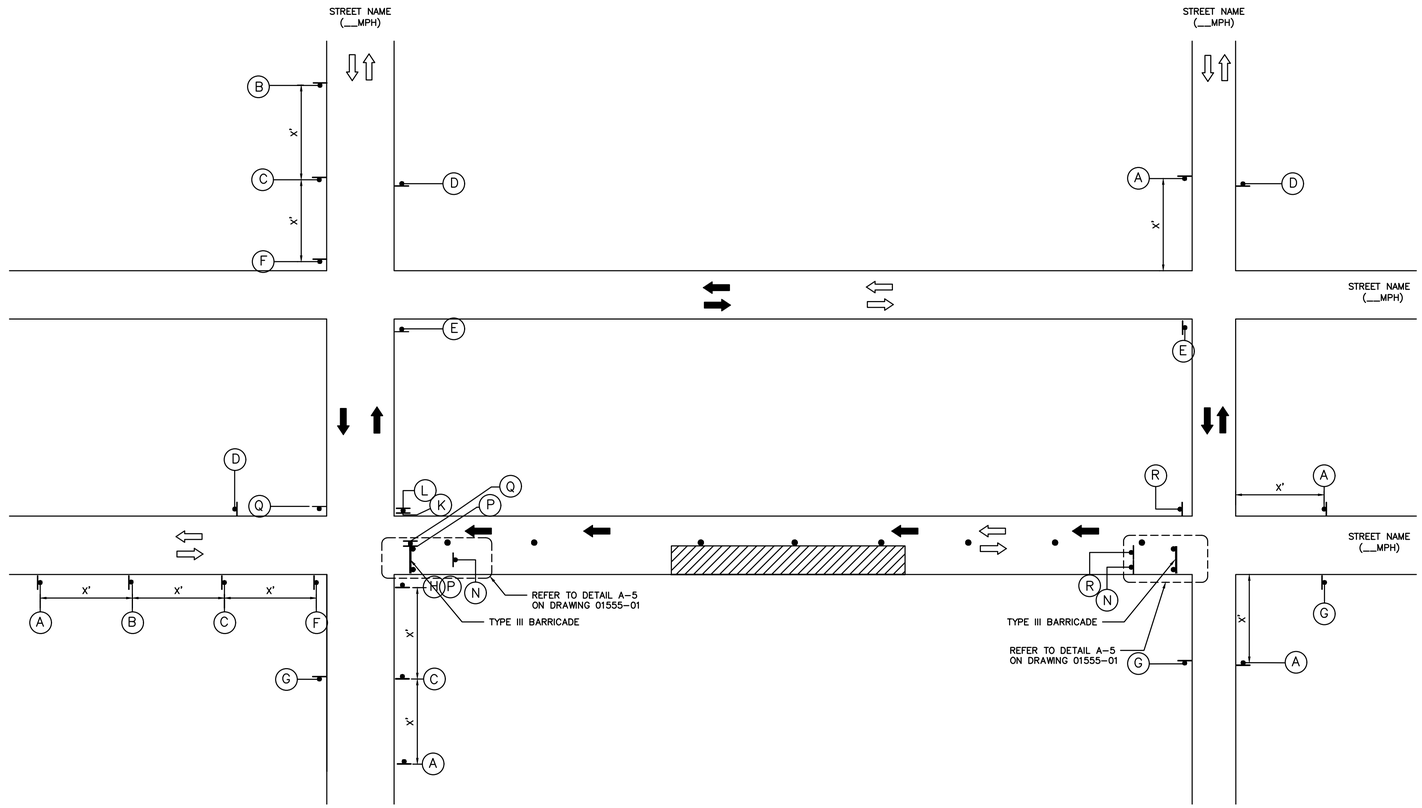

LEGEND:

- SIGN
- FLAGGER
- APPROVED CHANNELIZATION DEVICE
- BARRICADE
- FLASHING ARROW PANEL
- AREA UNDER CONSTRUCTION
- EXISTING TRAVEL WAY
- TRAFFIC CONTROL PLAN DETOUR TRAVEL WAY

NOTES:

1. A 10' MINIMUM LANE WIDTH FOR EMERGENCY SHALL BE MADE AVAILABLE AND MAINTAINED BY THE CONTRACTOR AT ALL TIMES.
2. FOR DIMENSIONS REFER TO SHEET 01555-01.
3. INSTALL FLASHERS ON DRUMS WHERE REQUIRED AND APPROVED BY CITY TRAFFIC ENGINEER.

APPROVED BY:	APPROVED BY:
DocuSigned by: Suhail Kanwar 3EFB90C8417F47B...	DocuSigned by: KHANG NGUYEN 95A29EFDA75B4CD...
CITY ENGINEER	CITY TRAFFIC ENGINEER
APPROVED BY: DocuSigned by: Carol Haddock 4A9CA1DE1DD4A4...	
DIRECTOR OF HOUSTON PUBLIC WORKS	
EFF DATE: NOV-27-2023	DWG NO: 01555-05

CITY OF HOUSTON
HOUSTON PUBLIC WORKS STANDARD

TCP TYPICAL DETOUR ROUTING WITH ONE LANE CLOSURE (ONE BLOCK)

DRAWING SCALE	FOR CITY OF HOUSTON USE ONLY
NOT TO SCALE	

RPS A TETRA TECH COMPANY
Texas PE Firm Reg. #F-929
575 N. Dairy Ashford, Suite 700,
Houston, Texas 77079
T +1 281 589 7257
E usinfrastructure@rpsgroup.com

SURVEYED BY: KUO Inc.
FB NO. F-4578

This document is released for the purposes of interim review only under the authority of:

Jeremy Austin, P.E.
Texas P.E. No. 116816
09/11/2026

It is not to be used for bidding, construction, or permitting purposes.

CITY OF HOUSTON
HOUSTON PUBLIC WORKS

LIFT STATION REHABILITATION & RECONSTRUCTION

TRAFFIC CONTROL DETAILS
(SHEET 5 OF 15)
STD-C-32

WBS NUMBER	FOR CITY OF HOUSTON USE ONLY
R-000267-178A-3	
DRAWING SCALE	
AS NOTED	
CITY OF HOUSTON PM	
TAHA LOTIA	
SHEET NO. 98 OF 147	

DISCLAIMER:
THE USE OF THIS STANDARD IS GOVERNED BY THE TEXAS ENGINEERING PRACTICE ACT. THE DESIGN REQUIREMENTS ON THIS STANDARD DO NOT PURPORT TO ADDRESS ALL OF THE SAFETY CONCERNS ASSOCIATED WITH THEIR USE. THE ENGINEER OF RECORD (EOR) IS TO REVIEW THESE DESIGN REQUIREMENTS AND BY AUTHORIZING THEIR USE, ACCEPTS RESPONSIBILITY FOR THEIR APPLICABILITY, ADEQUACY AND SAFETY. NO WARRANTY OF ANY KIND IS MADE BY THE CITY OF HOUSTON FOR ANY PURPOSES WHATSOEVER. THE CITY OF HOUSTON ASSUMES NO RESPONSIBILITY FOR INCORRECT RESULTS OR DAMAGES RESULTING FROM ITS USE.

FILE PATH: C:\Users\andres.martinezjr\DC\ACCDocs\Tetra Tech Inc\200-317106-24001 COH LS Rehab Design\Project Files\CAD\R-000267-178A-3-TCP-DETOUR-STD-C-32.dwg
PLOT DATE: 9/10/2026 BY: ANDRES.MARTINEZJR

DocuSign Envelope ID: CB71C116-B716-4899-A5EE-0D2F2CC55AF6

A	T	U	D	M	N
CW20-1	CW20-4	CW20-7	G20-2	R5-1	R11-2

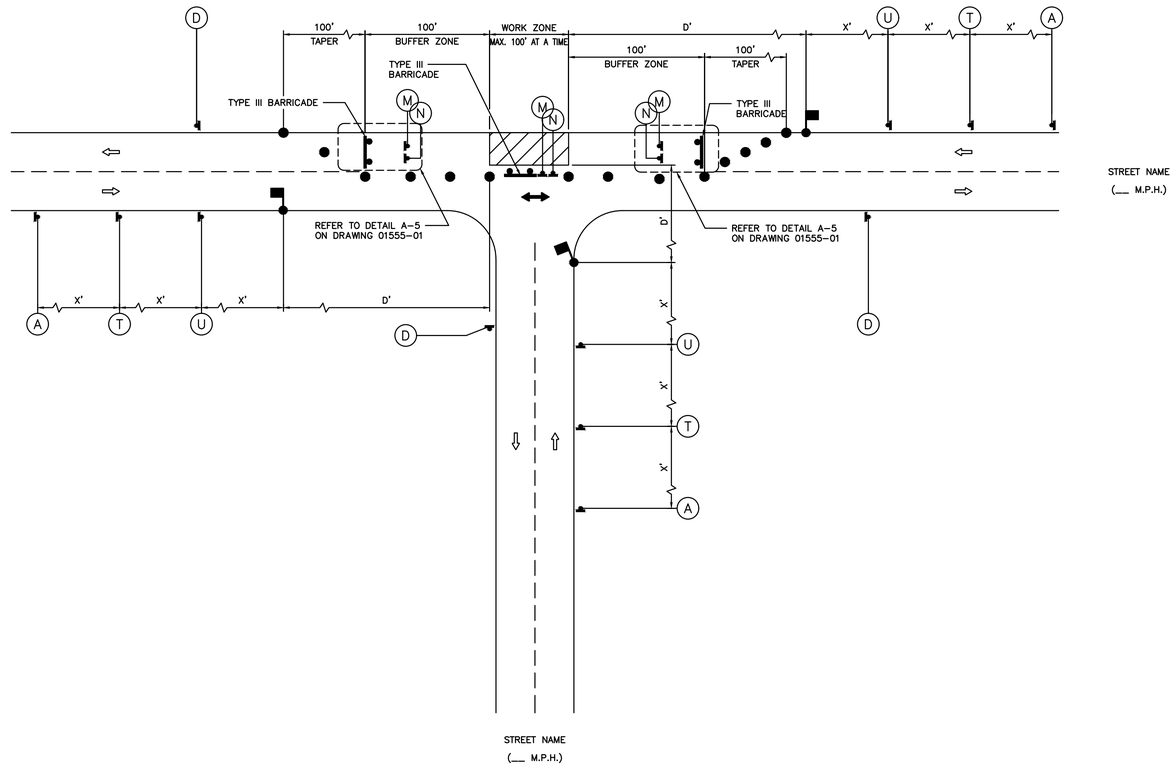

LEGEND:

- SIGN
- FLAGGER
- APPROVED CHANNELIZATION DEVICE
- BARRICADE
- FLASHING ARROW PANEL
- AREA UNDER CONSTRUCTION
- EXISTING TRAVEL WAY
- TRAFFIC CONTROL PLAN DETOUR TRAVEL WAY

NOTES:

1. MINOR WORK AND DAYTIME OPERATIONS ONLY.
2. REFER TO PROJECT SPECIFIC TRAFFIC CONTROL PLANS FOR MAJOR OPERATIONS AND OVERNIGHT LANE CLOSURES.
3. FOR DIMENSIONS REFER TO SHEET 01555-01.
4. INSTALL FLASHERS ON DRUMS WHERE REQUIRED AND APPROVED BY CITY TRAFFIC ENGINEER.
5. MAX. 100' WORK ZONE AT A TIME.

APPROVED BY:	APPROVED BY:
DocuSigned by: Sukut Kanwar 3B1180C64191A7B...	DocuSigned by: KHANG NGUYEN 85A2987F2A7B84CD...
CITY ENGINEER	CITY TRAFFIC ENGINEER
APPROVED BY: DocuSigned by: Carol Haddock A80C4108572B3A3...	
DIRECTOR OF HOUSTON PUBLIC WORKS	
EFF DATE: NOV-27-2023	DWG NO: 01555-06

CITY OF HOUSTON
HOUSTON PUBLIC WORKS STANDARD

TCP TYPICAL CONSTRUCTION ZONE AT A T-INTERSECTION PHASE 1 OF 3

	FOR CITY OF HOUSTON USE ONLY
DRAWING SCALE	
NOT TO SCALE	

RPS A TETRA TECH COMPANY
Texas PE Firm Reg. #F-929
575 N. Dairy Ashford, Suite 700, Houston, Texas 77079
T +1 281 589 7257
E usinfrastructure@rpsgroup.com

SURVEYED BY: KUO Inc.
FB NO. F-4578

This document is released for the purposes of interim review only under the authority of:
Jeremy Austin, P.E.
Texas P.E. No. 116816
09/11/2026
It is not to be used for bidding, construction, or permitting purposes.

CITY OF HOUSTON
HOUSTON PUBLIC WORKS

LIFT STATION REHABILITATION & RECONSTRUCTION

TRAFFIC CONTROL DETAILS
(SHEET 6 OF 15)
STD-C-33

WBS NUMBER	FOR CITY OF HOUSTON USE ONLY
R-000267-178A-3	
DRAWING SCALE	
AS NOTED	
CITY OF HOUSTON PM	
TAHA LOTIA	
SHEET NO. 99 OF 147	

DISCLAIMER:
THE USE OF THIS STANDARD IS GOVERNED BY THE TEXAS ENGINEERING PRACTICE ACT. THE DESIGN REQUIREMENTS ON THIS STANDARD DO NOT PURPORT TO ADDRESS ALL OF THE SAFETY CONCERNS ASSOCIATED WITH THEIR USE. THE ENGINEER OF RECORD (EOR) IS TO KNOW THE LOCAL REQUIREMENTS AND APPLICABLE LAWS AND ACCEPTS RESPONSIBILITY FOR THEIR APPROPRIATE, LEGAL AND SAFE USE. BY AUTHORIZING THIS USE, CITY OF HOUSTON ASSUMES NO RESPONSIBILITY FOR INCORRECT RESULTS OR DAMAGES RESULTING FROM ITS USE. THE USE OF THIS STANDARD BY ANY PERSON, ENTITY OR ASSOCIATION IN CONNECTION WITH ANY APPLICATION OTHER THAN THAT SPECIFICALLY INTENDED BY THE CITY OF HOUSTON FOR ANY PURPOSES WHATSOEVER. THE CITY OF HOUSTON ASSUMES NO RESPONSIBILITY FOR INCORRECT RESULTS OR DAMAGES RESULTING FROM ITS USE. WARRANTY OF ANY KIND IS MADE BY THE CITY OF HOUSTON FOR ANY PURPOSES WHATSOEVER.

FILE PATH: C:\Users\andres.martinezjr\DC\ACCDocs\Tetra Tech Inc\200-317106-24001 COH LS Rehab Design\Project Files\CAD\R-000267-178A-3_TCP-TYPICAL-CONSTRUCTION-ZONE-AT-A-T-INTERSECTION-PHASE-1-OF-3.dgn

DocuSign Envelope ID: CB71C116-B716-4899-A5EE-0D2F2CC55AF6

A	T	U	D	M	N
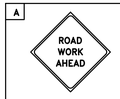		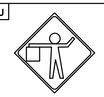	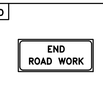	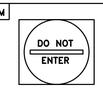	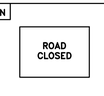
CW20-1	CW20-4	CW20-7	G20-2	R5-1	R11-2

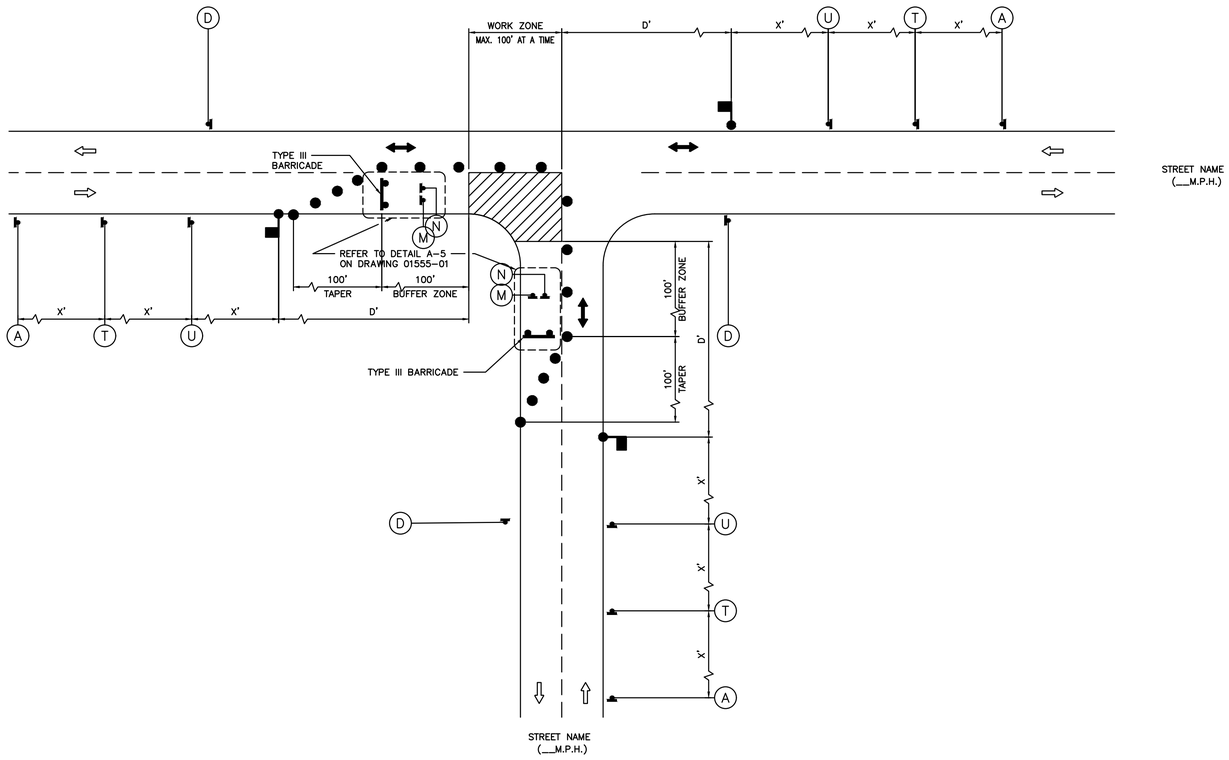

LEGEND:

- SIGN
- FLAGGER
- APPROVED CHANNELIZATION DEVICE
- BARRICADE
- FLASHING ARROW PANEL
- AREA UNDER CONSTRUCTION
- EXISTING TRAVEL WAY
- TRAFFIC CONTROL PLAN DETOUR TRAVEL WAY

NOTES:

1. MINOR WORK AND DAYTIME OPERATIONS ONLY.
2. REFER TO PROJECT SPECIFIC TRAFFIC CONTROL PLANS FOR MAJOR OPERATIONS AND OVERNIGHT LANE CLOSURES.
3. FOR DIMENSIONS REFER TO SHEET 01555-01.
4. INSTALL FLASHERS ON DRUMS WHERE REQUIRED AND APPROVED BY CITY TRAFFIC ENGINEER.
5. MAX. 100' WORK ZONE AT A TIME.

APPROVED BY:	APPROVED BY:
DocuSigned by: Sukul Kanwar 8EF8BDC841F1478...	DocuSigned by: HANG NGUYEN 95A29EFDA7B94CD...
CITY ENGINEER	CITY TRAFFIC ENGINEER
APPROVED BY: DocuSigned by: Carol Haddock A80C4105B73B3403...	
DIRECTOR OF HOUSTON PUBLIC WORKS	
EFF DATE: NOV-27-2023	DWG NO: 01555-07

CITY OF HOUSTON
HOUSTON PUBLIC WORKS STANDARD

TCP TYPICAL CONSTRUCTION ZONE AT A T-INTERSECTION PHASE 2 OF 3

	FOR CITY OF HOUSTON USE ONLY
DRAWING SCALE	
NOT TO SCALE	

RPS A TETRA TECH COMPANY
Texas PE Firm Reg. #F-929
575 N. Dairy Ashford, Suite 700,
Houston, Texas 77079
T +1 281 589 7257
E usinfrastructure@rpsgroup.com

SURVEYED BY: KUO Inc.
FB NO. F-4578

This document is released for the purposes of interim review only under the authority of:

Jeremy Austin, P.E.
Texas P.E. No. 116816
09/11/2026

It is not to be used for bidding, construction, or permitting purposes.

CITY OF HOUSTON
HOUSTON PUBLIC WORKS

LIFT STATION REHABILITATION & RECONSTRUCTION

TRAFFIC CONTROL DETAILS
(SHEET 7 OF 15)
STD-C-34

WBS NUMBER	FOR CITY OF HOUSTON USE ONLY
R-000267-178A-3	
DRAWING SCALE	
AS NOTED	
CITY OF HOUSTON PM	
TAHA LOTIA	
SHEET NO. 100 OF 147	

DISCLAIMER:
THE USE OF THIS STANDARD IS GOVERNED BY THE TEXAS ENGINEERING PRACTICE ACT. THE DESIGN REQUIREMENTS ON THIS STANDARD DO NOT PURPORT TO ADDRESS ALL OF THE SAFETY CONCERNS ASSOCIATED WITH THEIR USE. THE ENGINEER OF RECORD (EOR) IS TO REVIEW THESE DESIGN REQUIREMENTS AND BY AUTHORIZING THEIR USE, ACCEPTS RESPONSIBILITY FOR THEIR APPLICABILITY, ADEQUACY AND SAFETY. NO WARRANTY OF ANY KIND IS MADE BY THE CITY OF HOUSTON FOR ANY PURPOSES WHATSOEVER. THE CITY OF HOUSTON ASSUMES NO RESPONSIBILITY FOR INCORRECT RESULTS OR DAMAGES RESULTING FROM ITS USE.

FILE PATH: C:\Users\andres.martinezjr\DC\ACCDocs\Tetra Tech Inc\200-317106-24001 COH LS Rehab Design\Project Files\CAD\R-000267-...

Docu/Sign Envelope ID: CB71C116-B716-4899-A5EE-0D2F2CC55AF6

A	T	U	D	M	N
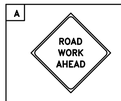		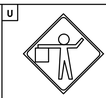		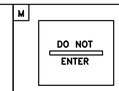	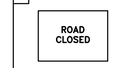
CW20-1	CW20-4	CW20-7	G20-2	R5-1	R11-2

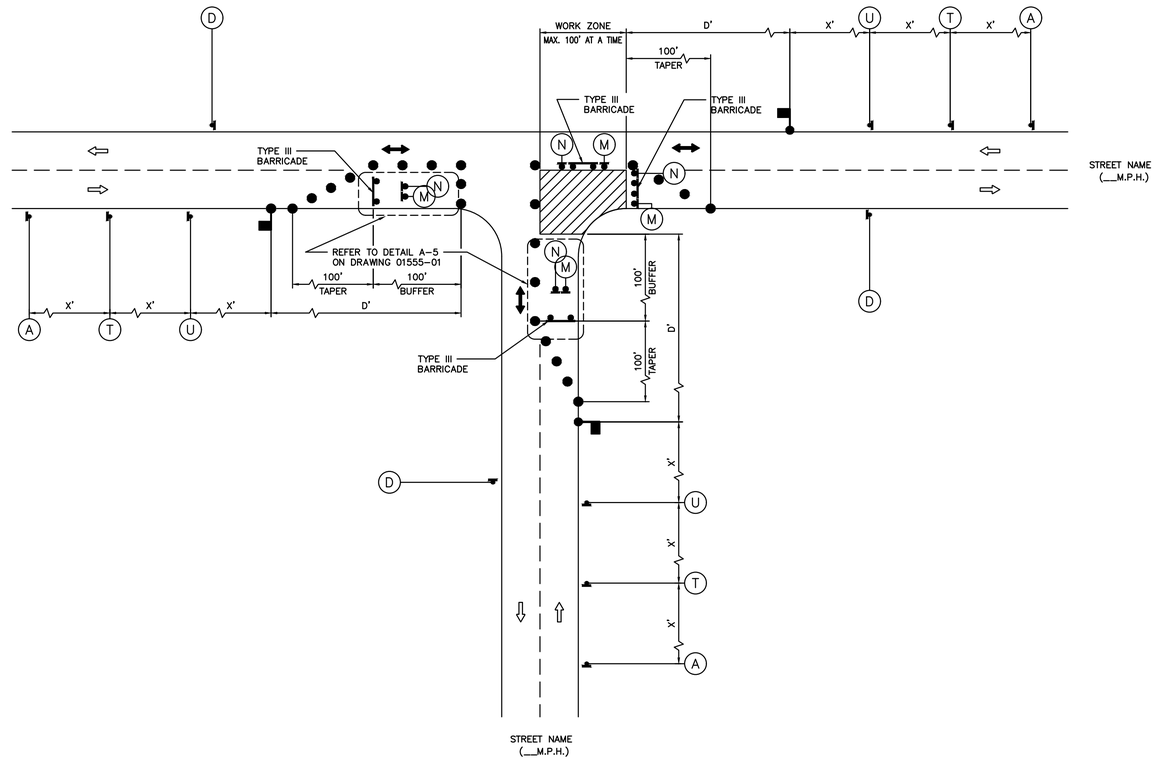

LEGEND:

- SIGN
- FLAGGER
- APPROVED CHANNELIZATION DEVICE
- BARRICADE
- FLASHING ARROW PANEL
- AREA UNDER CONSTRUCTION
- EXISTING TRAVEL WAY
- TRAFFIC CONTROL PLAN DETOUR TRAVEL WAY

NOTES:

1. MINOR WORK AND DAYTIME OPERATIONS ONLY.
2. REFER TO PROJECT SPECIFIC TRAFFIC CONTROL PLANS FOR MAJOR OPERATIONS AND OVERNIGHT LANE CLOSURES.
3. FOR DIMENSIONS REFER TO SHEET 01555-01.
4. INSTALL FLASHERS ON DRUMS WHERE REQUIRED AND APPROVED BY CITY TRAFFIC ENGINEER.
5. MAX. 100' WORK ZONE AT A TIME.

APPROVED BY:	APPROVED BY:
DocuSigned by: Sukul Tanwar	DocuSigned by: KHANG NGUYEN
CITY ENGINEER	CITY TRAFFIC ENGINEER
APPROVED BY: DocuSigned by: Carol Haddock	
DIRECTOR OF HOUSTON PUBLIC WORKS	
EFF DATE: NOV-27-2023	DWG NO: 01555-08

CITY OF HOUSTON
HOUSTON PUBLIC WORKS STANDARD

TCP TYPICAL CONSTRUCTION ZONE AT A T-INTERSECTION PHASE 3 OF 3

	FOR CITY OF HOUSTON USE ONLY
DRAWING SCALE	
NOT TO SCALE	

RPS A TETRA TECH COMPANY
Texas PE Firm Reg. #F-929
575 N. Dairy Ashford, Suite 700,
Houston, Texas 77079
T +1 281 589 7257
E usinfrastructure@rpsgroup.com

SURVEYED BY: KUO Inc.
FB NO. F-4578

This document is released for the purposes of interim review only under the authority of:

Jeremy Austin, P.E.
Texas P.E. No. 116816
09/11/2026

It is not to be used for bidding, construction, or permitting purposes.

CITY OF HOUSTON
HOUSTON PUBLIC WORKS

LIFT STATION REHABILITATION & RECONSTRUCTION

TRAFFIC CONTROL DETAILS
(SHEET 8 OF 15)
STD-C-35

WBS NUMBER	FOR CITY OF HOUSTON USE ONLY
R-000267-178A-3	
DRAWING SCALE	
AS NOTED	
CITY OF HOUSTON PM	
TAHA LOTIA	
SHEET NO. 101 OF 147	

DISCLAIMER:
THE USE OF THIS STANDARD IS GOVERNED BY THE TEXAS ENGINEERING PRACTICE ACT. THE DESIGN REQUIREMENTS ON THIS STANDARD DO NOT PURPORT TO ADDRESS ALL OF THE SAFETY CONCERNS ASSOCIATED WITH THEIR USE. THE ENGINEER OF RECORD (EOR) IS TO REVIEW THESE DESIGN REQUIREMENTS AND BY AUTHORIZING THEIR USE ACCEPTS RESPONSIBILITY FOR THEIR APPLICABILITY, ADEQUACY AND SAFETY. NO WARRANTY OF ANY KIND IS MADE BY THE CITY OF HOUSTON FOR ANY PURPOSES WHATSOEVER. THE CITY OF HOUSTON ASSUMES NO RESPONSIBILITY FOR INCORRECT RESULTS OR DAMAGES RESULTING FROM ITS USE.

FILE PATH: C:\Users\andres.martinezjr\DC\ACCDocs\Tetra Tech Inc\200-317106-24001 COH LS Rehab Design\Project Files\CAD\R-000267-...

DocuSign Envelope ID: CB71C116-B716-4899-A5EE-0D2F2CC55AF6

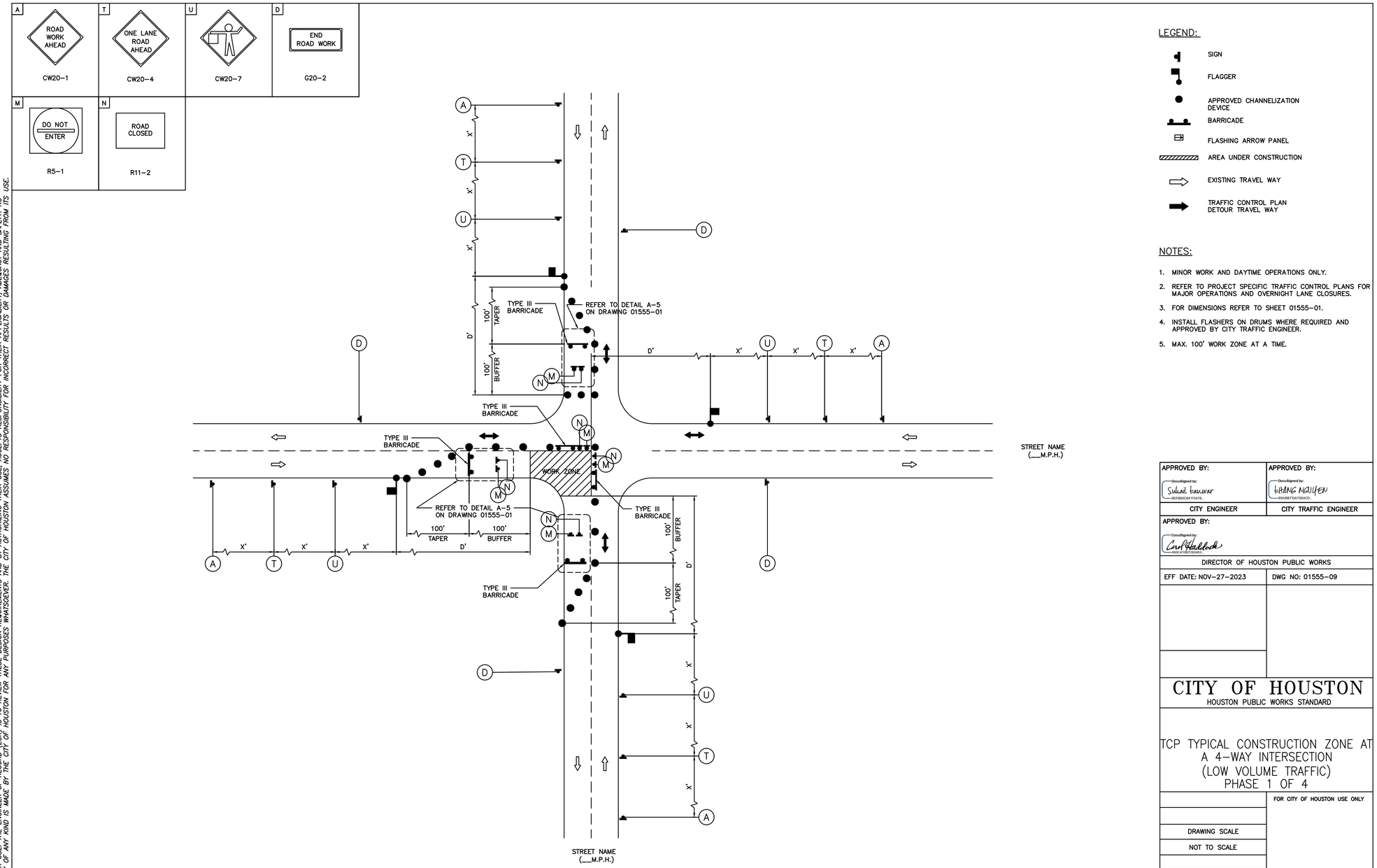

LEGEND:

- SIGN
- FLAGGER
- APPROVED CHANNELIZATION DEVICE
- BARRICADE
- FLASHING ARROW PANEL
- AREA UNDER CONSTRUCTION
- EXISTING TRAVEL WAY
- TRAFFIC CONTROL PLAN DETOUR TRAVEL WAY

NOTES:

1. MINOR WORK AND DAYTIME OPERATIONS ONLY.
2. REFER TO PROJECT SPECIFIC TRAFFIC CONTROL PLANS FOR MAJOR OPERATIONS AND OVERNIGHT LANE CLOSURES.
3. FOR DIMENSIONS REFER TO SHEET 01555-01.
4. INSTALL FLASHERS ON DRUMS WHERE REQUIRED AND APPROVED BY CITY TRAFFIC ENGINEER.
5. MAX. 100' WORK ZONE AT A TIME.

APPROVED BY:	APPROVED BY:
DocuSigned by: Suhail Kanwar	DocuSigned by: HIHING NGUYEN
CITY ENGINEER	CITY TRAFFIC ENGINEER
APPROVED BY: DocuSigned by: Carl Haddock	
DIRECTOR OF HOUSTON PUBLIC WORKS	
EFF DATE: NOV-27-2023	DWG NO: 01555-09

CITY OF HOUSTON
HOUSTON PUBLIC WORKS STANDARD

TCP TYPICAL CONSTRUCTION ZONE AT A 4-WAY INTERSECTION (LOW VOLUME TRAFFIC) PHASE 1 OF 4

	FOR CITY OF HOUSTON USE ONLY
DRAWING SCALE	
NOT TO SCALE	

TPS A TETRA TECH COMPANY
Texas PE Firm Reg. #F-929
575 N. Dairy Ashford, Suite 700, Houston, Texas 77079
T +1 281 589 7257
E usinfrastructure@rpsgroup.com

SURVEYED BY: KUO Inc.
FB NO. F-4578

This document is released for the purposes of interim review only under the authority of:

Jeremy Austin, P.E.
Texas P.E. No. 116816
09/11/2026

It is not to be used for bidding, construction, or permitting purposes.

CITY OF HOUSTON
HOUSTON PUBLIC WORKS

LIFT STATION REHABILITATION & RECONSTRUCTION

TRAFFIC CONTROL DETAILS
(SHEET 9 OF 15)
STD-C-36

WBS NUMBER	FOR CITY OF HOUSTON USE ONLY
R-000267-178A-3	
DRAWING SCALE	
AS NOTED	
CITY OF HOUSTON PM	
TAHA LOTIA	
SHEET NO. 102 OF 147	

DISCLAIMER:
THE USE OF THIS STANDARD IS GOVERNED BY THE TEXAS ENGINEERING PRACTICE ACT. THE DESIGN REQUIREMENTS ON THIS STANDARD DO NOT PURPORT TO ADDRESS ALL OF THE SAFETY CONCERNS ASSOCIATED WITH THEIR USE. THE ENGINEER OF RECORD (EOR) IS TO REVIEW THESE DESIGN REQUIREMENTS AND BY AUTHORIZING THEIR USE, ACCEPTS RESPONSIBILITY FOR THEIR APPLICABILITY, ADEQUACY AND SAFETY. NO WARRANTY OF ANY KIND IS MADE BY THE CITY OF HOUSTON FOR ANY PURPOSES WHATSOEVER. THE CITY OF HOUSTON ASSUMES NO RESPONSIBILITY FOR INCORRECT RESULTS OR DAMAGES RESULTING FROM ITS USE.

FILE PATH: C:\Users\andres.martinezjr\DC\ACCDocs\Tetra Tech Inc\200-317106-24001 COH LS Rehab Design\Project Files\CAD\R-000267-178A-3-STYLEmasterPlotStyleTable.ctb DEPARTMENT OF TRANSPORTATION 9/15/2023 3:03:03 PM

DocuSign Envelope ID: CB71C116-B716-4899-A5EE-0D2F2CC55AF6

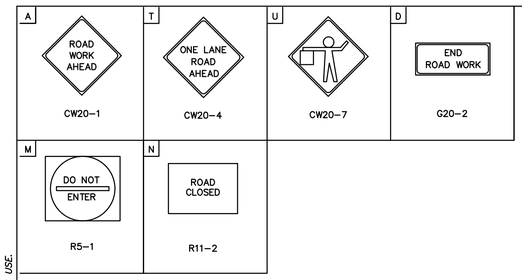

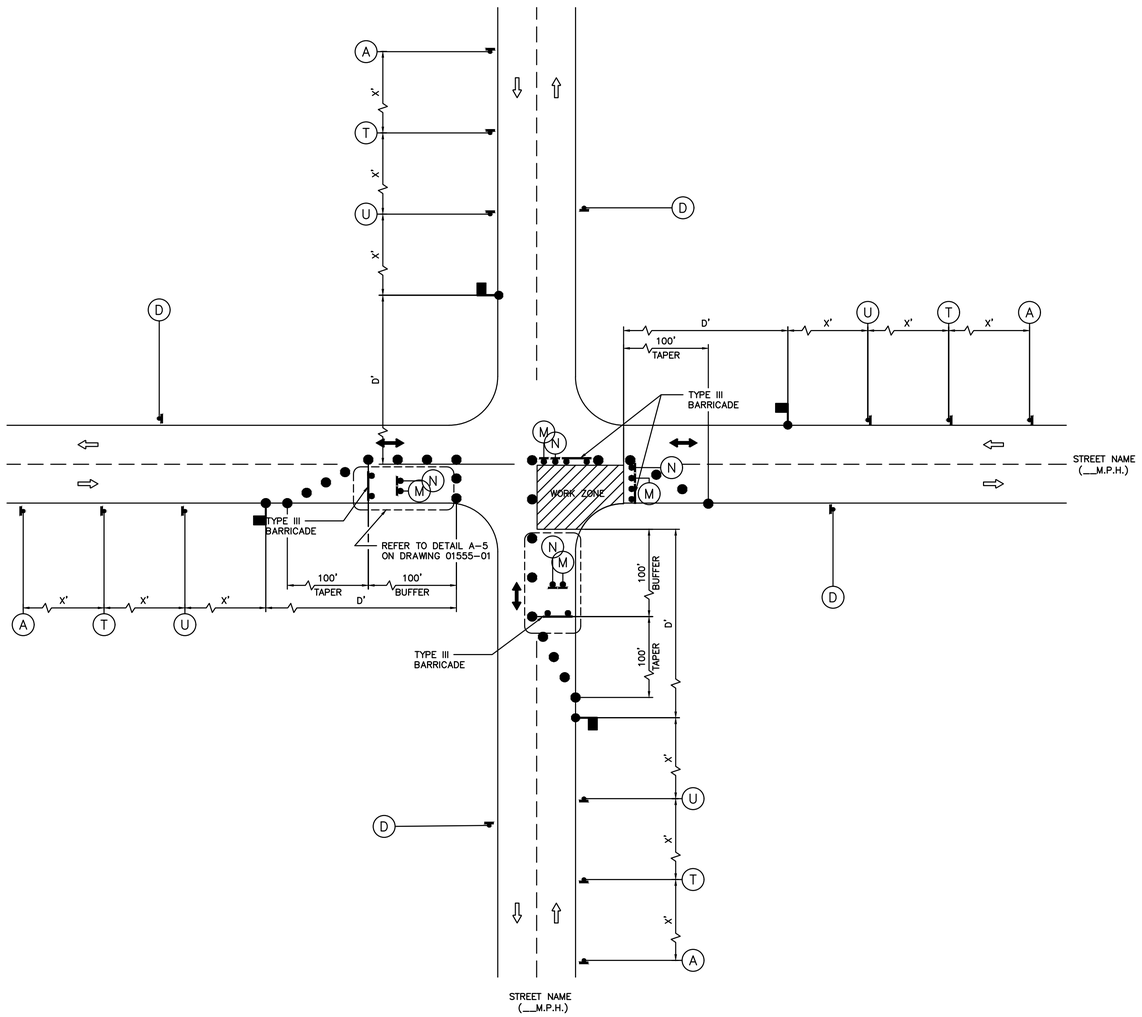

LEGEND:

- SIGN
- FLAGGER
- APPROVED CHANNELIZATION DEVICE
- BARRICADE
- FLASHING ARROW PANEL
- AREA UNDER CONSTRUCTION
- EXISTING TRAVEL WAY
- TRAFFIC CONTROL PLAN DETOUR TRAVEL WAY

NOTES:

1. MINOR WORK AND DAYTIME OPERATIONS ONLY.
2. REFER TO PROJECT SPECIFIC TRAFFIC CONTROL PLANS FOR MAJOR OPERATIONS AND OVERNIGHT LANE CLOSURES.
3. FOR DIMENSIONS REFER TO SHEET 01555-01.
4. INSTALL FLASHERS ON DRUMS WHERE REQUIRED AND APPROVED BY CITY TRAFFIC ENGINEER.
5. MAX. 100' WORK ZONE AT A TIME.

APPROVED BY:	APPROVED BY:
DocuSigned by: Suhail Kanwar 3EF1B8DC9419...	DocuSigned by: KHANG NGUYEN 95A2807DA75B4CD...
CITY ENGINEER	CITY TRAFFIC ENGINEER
APPROVED BY: DocuSigned by: Carol Haddock A6DC47B57B5A83...	
DIRECTOR OF HOUSTON PUBLIC WORKS	
EFF DATE: NOV-27-2023	DWG NO: 01555-10

CITY OF HOUSTON
HOUSTON PUBLIC WORKS STANDARD

TCP TYPICAL CONSTRUCTION ZONE AT A 4-WAY INTERSECTION (LOW VOLUME TRAFFIC) PHASE 2 OF 4

	FOR CITY OF HOUSTON USE ONLY
DRAWING SCALE	
NOT TO SCALE	

RPS A TETRA TECH COMPANY
Texas PE Firm Reg. #F-929
575 N. Dairy Ashford, Suite 700, Houston, Texas 77079
T +1 281 589 7257
E usinfrastructure@rpsgroup.com

SURVEYED BY: KUO Inc.
FB NO. F-4578

This document is released for the purposes of interim review only under the authority of:
Jeremy Austin, P.E.
Texas P.E. No. 116816
09/11/2026
It is not to be used for bidding, construction, or permitting purposes.

CITY OF HOUSTON
HOUSTON PUBLIC WORKS

LIFT STATION REHABILITATION & RECONSTRUCTION

TRAFFIC CONTROL DETAILS
(SHEET 10 OF 15)
STD-C-37

WBS NUMBER	FOR CITY OF HOUSTON USE ONLY
R-000267-178A-3	
DRAWING SCALE	
AS NOTED	
CITY OF HOUSTON PM	
TAHA LOTIA	
SHEET NO. 103 OF 147	

DISCLAIMER:
THE USE OF THIS STANDARD IS GOVERNED BY THE TEXAS ENGINEERING PRACTICE ACT. THE DESIGN REQUIREMENTS ON THIS STANDARD DO NOT PURPORT TO ADDRESS ALL OF THE SAFETY CONCERNS ASSOCIATED WITH THEIR USE. THE ENGINEER OF RECORD (EOR) IS TO REVIEW THESE DESIGN REQUIREMENTS AND BY AUTHORIZING THEIR USE ACCEPTS RESPONSIBILITY FOR THEIR APPLICABILITY, ADEQUACY AND SAFETY; NO WARRANTY OF ANY KIND IS MADE BY THE CITY OF HOUSTON FOR ANY PURPOSES WHATSOEVER. THE CITY OF HOUSTON ASSUMES NO RESPONSIBILITY FOR INCORRECT RESULTS OR DAMAGES RESULTING FROM ITS USE.

FILE PATH: C:\Users\andres.martinezjr\DC\ACCDocs\Tetra Tech Inc\200-317106-24001 COH LS Rehab Design\Project Files\CAD\R-000267-178A-3-STD-C-37.dwg

DocuSign Envelope ID: CB71C116-B716-4899-A5EE-0D2F2CC55AF6

A	T	U	D
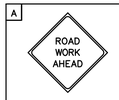 CW20–1	CW20–4	CW20–7	G20–2

M	N
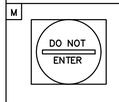 R5–1	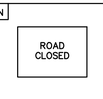 R11–2

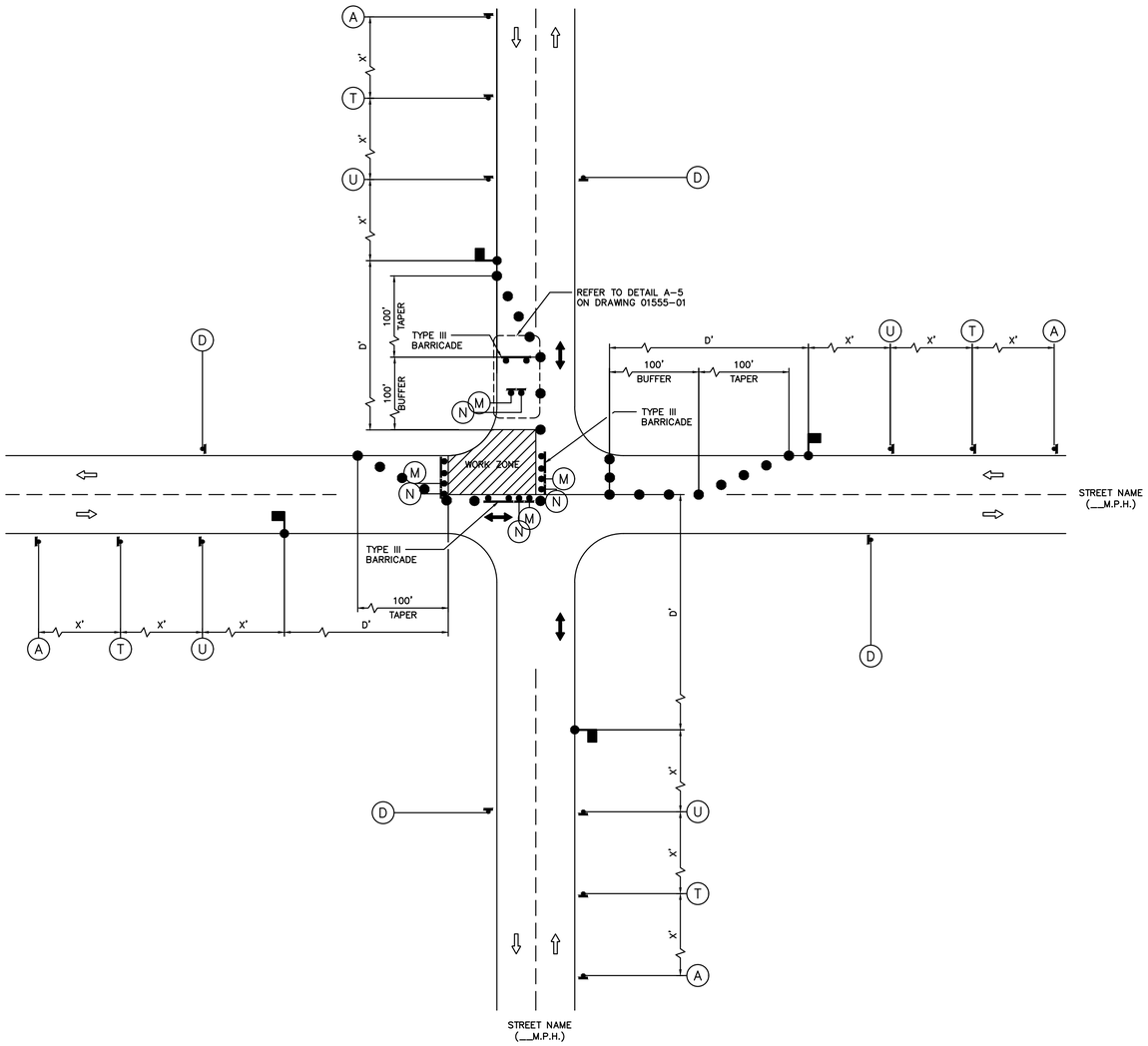

LEGEND:

- SIGN
- FLAGGER
- APPROVED CHANNELIZATION DEVICE
- BARRICADE
- FLASHING ARROW PANEL
- AREA UNDER CONSTRUCTION
- EXISTING TRAVEL WAY
- TRAFFIC CONTROL PLAN DETOUR TRAVEL WAY

NOTES:

1. MINOR WORK AND DAYTIME OPERATIONS ONLY.
2. REFER TO PROJECT SPECIFIC TRAFFIC CONTROL PLANS FOR MAJOR OPERATIONS AND OVERNIGHT LANE CLOSURES.
3. FOR DIMENSIONS REFER TO SHEET 01555–01.
4. INSTALL FLASHERS ON DRUMS WHERE REQUIRED AND APPROVED BY CITY TRAFFIC ENGINEER.
5. MAX. 100' WORK ZONE AT A TIME.

APPROVED BY:	APPROVED BY:
DocuSigned by: Sukul Kanwar 807B5DC847F4479...	DocuSigned by: HANG NGUYEN 95AC9B7DA7D84CD...
CITY ENGINEER	CITY TRAFFIC ENGINEER
APPROVED BY: DocuSigned by: Carol Haddock A8DCA1597250461...	
DIRECTOR OF HOUSTON PUBLIC WORKS	
EFF DATE: NOV–27–2023	DWG NO: 01555–11

CITY OF HOUSTON
HOUSTON PUBLIC WORKS STANDARD

TCP TYPICAL CONSTRUCTION ZONE AT A 4–WAY INTERSECTION (LOW VOLUME TRAFFIC) PHASE 3 OF 4

	FOR CITY OF HOUSTON USE ONLY
DRAWING SCALE	
NOT TO SCALE	

RPS
A TETRA TECH COMPANY
Texas PE Firm Reg. #F-929
575 N. Dairy Ashford, Suite 700,
Houston, Texas 77079
T +1 281 589 7257
E usinfrastructure@rpsgroup.com

SURVEYED BY: KUO Inc.
FB NO. F–4578

This document is released for the purposes of interim review only under the authority of:

Jeremy Austin, P.E.
Texas P.E. No. 116816
09/11/2026

It is not to be used for bidding, construction, or permitting purposes.

CITY OF HOUSTON
HOUSTON PUBLIC WORKS

LIFT STATION REHABILITATION & RECONSTRUCTION

TRAFFIC CONTROL DETAILS
(SHEET 11 OF 15)
STD–C–38

WBS NUMBER	FOR CITY OF HOUSTON USE ONLY
R–000267–178A–3	
DRAWING SCALE	
AS NOTED	
CITY OF HOUSTON PM	
TAHA LOTIA	
SHEET NO. 104 OF 147	

DISCLAIMER:
THE USE OF THIS STANDARD IS GOVERNED BY THE TEXAS ENGINEERING PRACTICE ACT. THE DESIGN REQUIREMENTS ON THIS STANDARD DO NOT PURPORT TO ADDRESS ALL OF THE SAFETY CONCERNS ASSOCIATED WITH THEIR USE. THE ENGINEER OF RECORD (EOR) IS TO REVIEW THESE DESIGN REQUIREMENTS AND BY AUTHORIZING THEIR USE, ACCEPTS RESPONSIBILITY FOR THEIR APPLICABILITY, ADEQUACY AND SAFETY. NO WARRANTY OF ANY KIND IS MADE BY THE CITY OF HOUSTON FOR ANY PURPOSES WHATSOEVER. THE CITY OF HOUSTON ASSUMES NO RESPONSIBILITY FOR INCORRECT RESULTS OR DAMAGES RESULTING FROM ITS USE.

FILE PATH: C:\Users\andres.martinezjr\DC\ACCDocs\Tetra Tech Inc\200–317106–24001 COH LS Rehab Design\Project Files\CAD\R–000267–...

DocuSign Envelope ID: CB71C116-B716-4899-A5EE-0D2F2CC55AF6

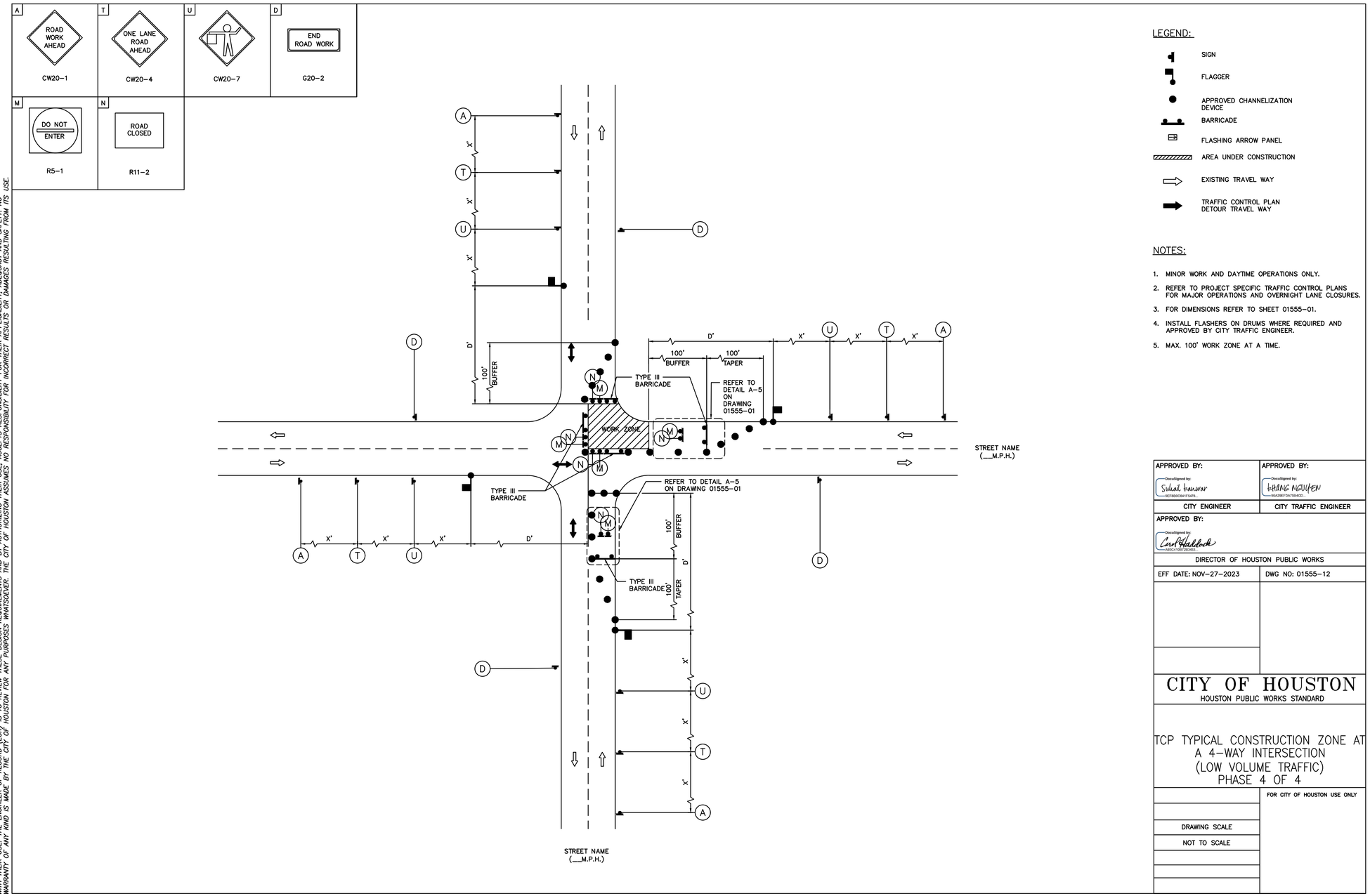

LEGEND:

- SIGN
- FLAGGER
- APPROVED CHANNELIZATION DEVICE
- BARRICADE
- FLASHING ARROW PANEL
- AREA UNDER CONSTRUCTION
- EXISTING TRAVEL WAY
- TRAFFIC CONTROL PLAN DETOUR TRAVEL WAY

NOTES:

1. MINOR WORK AND DAYTIME OPERATIONS ONLY.
2. REFER TO PROJECT SPECIFIC TRAFFIC CONTROL PLANS FOR MAJOR OPERATIONS AND OVERNIGHT LANE CLOSURES.
3. FOR DIMENSIONS REFER TO SHEET 01555-01.
4. INSTALL FLASHERS ON DRUMS WHERE REQUIRED AND APPROVED BY CITY TRAFFIC ENGINEER.
5. MAX. 100' WORK ZONE AT A TIME.

APPROVED BY:	APPROVED BY:
DocuSigned by: Sukant Kanwar 8EF8B0C64F5A76...	DocuSigned by: KHANG NGUYEN 86A2AEFDA7184CD...
CITY ENGINEER	CITY TRAFFIC ENGINEER
APPROVED BY: DocuSigned by: Carol Haddock A92C41087283463...	
DIRECTOR OF HOUSTON PUBLIC WORKS	
EFF DATE: NOV-27-2023	DWG NO: 01555-12

CITY OF HOUSTON
HOUSTON PUBLIC WORKS STANDARD

TCP TYPICAL CONSTRUCTION ZONE AT A 4-WAY INTERSECTION (LOW VOLUME TRAFFIC) PHASE 4 OF 4

	FOR CITY OF HOUSTON USE ONLY
DRAWING SCALE	
NOT TO SCALE	

RPS A TETRA TECH COMPANY
Texas PE Firm Reg. #F-929
575 N. Dairy Ashford, Suite 700, Houston, Texas 77079
T +1 281 589 7257
E usinfrastructure@rpsgroup.com

SURVEYED BY: KUO Inc.
FB NO. F-4578

This document is released for the purposes of interim review only under the authority of:
Jeremy Austin, P.E.
Texas P.E. No. 116816
09/11/2026
It is not to be used for bidding, construction, or permitting purposes.

CITY OF HOUSTON
HOUSTON PUBLIC WORKS

LIFT STATION REHABILITATION & RECONSTRUCTION

TRAFFIC CONTROL DETAILS
(SHEET 12 OF 15)
STD-C-39

WBS NUMBER	FOR CITY OF HOUSTON USE ONLY
R-000267-178A-3	
DRAWING SCALE	
AS NOTED	
CITY OF HOUSTON PM	
TAHA LOTIA	
SHEET NO. 105 OF 147	

DISCLAIMER:
THE USE OF THIS STANDARD IS GOVERNED BY THE TEXAS ENGINEERING PRACTICE ACT. THE DESIGN REQUIREMENTS ON THIS STANDARD DO NOT PURPORT TO ADDRESS ALL OF THE SAFETY CONCERNS ASSOCIATED WITH THEIR USE. THE ENGINEER OF RECORD (EOR) IS TO REVIEW THESE DESIGN REQUIREMENTS AND BY AUTHORIZING THEIR USE, ACCEPTS RESPONSIBILITY FOR THEIR APPLICABILITY, ADEQUACY AND SAFETY. NO WARRANTY OF ANY KIND IS MADE BY THE CITY OF HOUSTON FOR ANY PURPOSES WHATSOEVER. THE CITY OF HOUSTON ASSUMES NO RESPONSIBILITY FOR INCORRECT RESULTS OR DAMAGES RESULTING FROM ITS USE.

FILE PATH: C:\Users\andres.martinezjr\DC\ACCDocs\Tetra Tech Inc\200-317106-24001 COH LS Rehab Design\Project Files\CAD\R-000267-178A-3-STD-C-39.dwg
Plotted: 09/10/2026 10:03:05 AM

DocuSign Envelope ID: CB71C116-B716-4899-A5EE-0D2F2CC55AF6

DISCLAIMER:
THE USE OF THIS STANDARD IS GOVERNED BY THE TEXAS ENGINEERING PRACTICE ACT. THE DESIGN REQUIREMENTS ON THIS STANDARD DO NOT PURPORT TO ADDRESS ALL OF THE SAFETY CONCERNS ASSOCIATED WITH THEIR USE. THE ENGINEER OF RECORD, (EOR) IS TO REVIEW THESE DESIGN REQUIREMENTS AND BY AUTHORIZING THEIR USE, ACCEPTS RESPONSIBILITY FOR THEIR APPLICABILITY, ADEQUACY AND SAFETY. NO WARRANTY OF ANY KIND IS MADE BY THE CITY OF HOUSTON FOR ANY PURPOSES WHATSOEVER. THE CITY OF HOUSTON ASSUMES NO RESPONSIBILITY FOR INCORRECT RESULTS OR DAMAGES RESULTING FROM ITS USE.

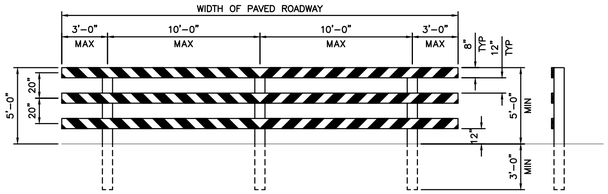

TYPE III BARRICADE FOR END OF ROAD

FOR TYPE III BARRICADE FOR END OF ROAD, THE THREE (3) RAILS SHALL BE REFLECTIVE RED AND RELFLECTIVE WHITE STRIPES ON SIDE FACING TRAFFIC

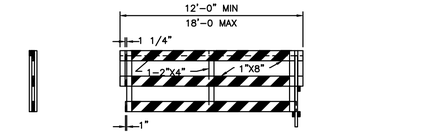

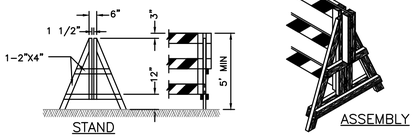

DEMOUNTABLE TYPE III BARRICADE

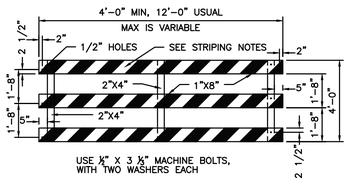

PANEL FOR TYPE III BARRICADE

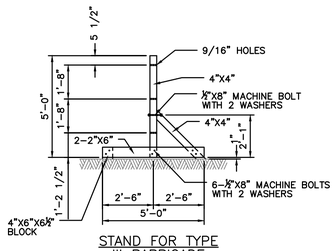

STAND FOR TYPE III BARRICADE

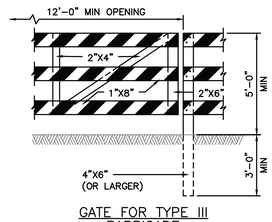

GATE FOR TYPE III BARRICADE

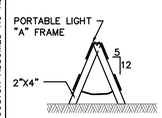

"A" FRAME

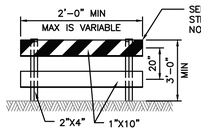

TYPE I

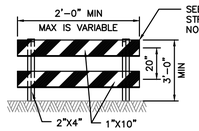

TYPE II

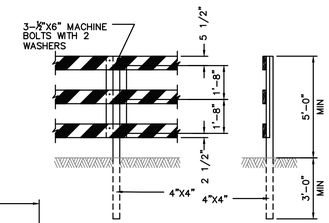

POST FOR TYPE III BARRICADE

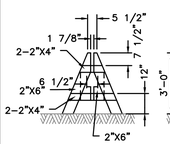

DEMOUNTABLE

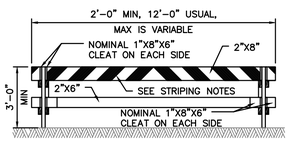

TYPE I

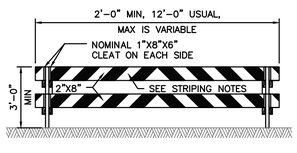

TYPE II

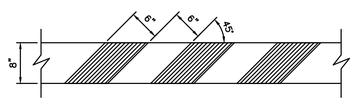

STRIPING FOR BARRICADE

BARRICADE NOTES:

1. THE MOST RECENT EDITION OF THE TEXAS MANUAL ON UNIFORM TRAFFIC CONTROL DEVICES, AND IT'S REVISIONS, SHALL GOVERN THE CONSTRUCTION AND USE OF ALL ITEMS HEREIN DESCRIBED.
2. CHANNELIZATION DEVICES OTHER THAN BARRICADES SHOULD NORMALLY BE USED FOR CHANNELIZATION PURPOSES.
3. BARRICADES SHOULD NORMALLY BE PLACED PERPENDICULAR TO THE TRAFFIC FLOW. OTHER CHANNELIZING DEVICES, SUCH AS DRUMS, VERTICAL PANELS OR PORTABLE BARRIERS, SHOULD BE USED WHERE NEEDED TO SEPARATE TRAFFIC FROM THE WORK AREA. IN ALL CASES, THE BARRICADES SHOULD BE SO LOCATED AS TO MOST ADVANTAGEOUSLY WARN AND DIRECT TRAFFIC.
4. BARRICADES MAY BE DESIGNED AND CONSTRUCTED FROM WOOD OR ANY OTHER SUITABLE MATERIAL APPROVED BY THE TMUTCD. THE CONSTRUCTION DETAILS SHOWN HEREON ARE TYPICAL AND ARE SUGGESTED DETAILS FOR WOOD SUPPORT SYSTEMS FOR BARRICADES. THE DETAILS OF RAIL WIDTH AND STRIPING, NUMBER AND SPACING OF RAILS, MINIMUM LENGTH AND HEIGHT (ABOVE PAVEMENT) OF RAILS MUST BE ADHERED TO WHEN ALTERNATE DESIGNS ARE USED.
5. BARRICADES ARE TO BE CONSTRUCTED OF CLEAN SOUND MATERIAL. ALL SURFACES ABOVE GROUND, WHICH ARE NOT STRIPED, SHALL BE WHITE EXCEPT THE UNPAINTED GALVANIZED METAL OR ALUMINUM COMPONENTS MAY BE USED. COMPONENTS MADE OF LUMBER SHALL BE PAINTED WITH A MINIMUM OF TWO COATS OF AN APPROVED BRAND OF WHITE PAINT TO SECURE THOROUGH COVERAGE AND A UNIFORM WHITE COLOR.
6. THE REFLECTORIZED WHITE AND REFLECTORIZED ORANGE (REFLECTORIZED RED) STRIPES FOR BARRICADES, DRUMS AND VERTICAL PANELS SHALL BE CONSTRUCTED OF HIGH INTESITY SHEETING AND SHALL BE MAINTAINED TO MEET THE APPEARANCE, COLOR AND RELFECTIVITY REQUIREMENTS SET BY DOTT.
7. THE CONTRACTOR SHALL MAINTAIN EACH BARRICADE IN A CLEAN AND GOOD CONDITION.
8. BARRICADES SHALL BE REMOVED UPON COMPLETION OF THE WORK AND/OR THE ELIMINATION OF THE HAZARD ON ANY SECTION.

1. FOR ALL TYPES OF BARRICADES WITH RAILS LESS THAN 3'-0" LONG, STRIPES 4" WIDE SHALL BE USED. IDENTIFICATION MARKINGS MAY BE SHOWN ONLY ON BACK SIDE OF BARRICADE RAILS.
2. STRIPING SHOULD COVER THE FULL WIDTH OF THE RAIL. STRIPING OF RAILS, PANELS, ETC, SHOULD SLOPE DOWNWARD AT AN ANGLE OF 45° DEGREES IN DIRECTIONS TRAFFIC IS TO PASS.
3. WHERE A BARRICADE EXTENDS ENTIRELY ACROSS A ROADWAY, IT IS DESIRABLE THAT THE STRIPES SLOPE DOWNWARD IN THE DIRECTION TOWARD WHICH TRAFFIC MUST TURN IN DETOURING. WHEN BOTH RIGHT AND LEFT TURNS ARE PROVIDED FOR, THE CHEVRON STRIPING MAY SLOPE DOWNWARD IN BOTH DIRECTIONS FROM THE CENTER OF THE BARRICADE.

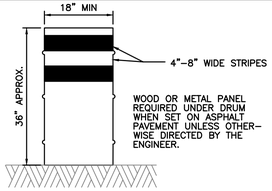

DRUMS

1. DRUMS, SET ON END, AND USED FOR TRAFFIC WARNING OR CHANNELIZATION SHALL BE APPROX 36" IN HEIGHT AND A MIN OF 18" IN DIAMETER. THE CONTRACTOR, AT HIS OPTION, MAY USE DRUMS MADE FROM STEEL BARRELS OR BLACK POLYETHYLENE PLASTIC DRUM LINERS WEIGHING APPROX EIGHT POUNDS EACH. THE MARKINGS ON DRUMS SHALL BE HORIZONTAL, CIRCUMFERENTIAL, REFLECTORIZED ORANGE AND REFLECTORIZED WHITE STRIPES, 4 TO 8 INCHES WIDE. THE FIRST REFLECTORIZED STRIPE SHOULD START WITHIN TWO (2) INCHES OF THE TOP OF THE DRUM. THERE SHALL BE AT LEAST TWO ORANGE AND TWO WHITE STRIPES ON EACH DRUM. IF THERE ARE NON-REFLECTORIZED SPACES BETWEEN THE HORIZONTAL ORANGE AND WHITE STRIPES, THEY SHALL BE NO MORE THAN 2 INCHES WIDE. METAL DRUMS SHALL BE PAINTED BLACK OR ORANGE BEFORE REFLECTORIZED STRIPES ARE ADDED. ALL DRUMS ON PROJECT WILL BE THE SAME COLOR. WHEN DRUMS ARE PLACED IN THE ROADWAY, APPROPIATE WARNING SIGNS SHOULD BE USED. DURING HOURS OF DARKNESS, A FLASHING WARNING LIGHT SHOULD BE PLACED ON DRUMS USED SINGLY AS A WARNING DEVICE. STEADY BURN ELECTRIC LIGHTS OR DELINEATORS SHOULD BE PLACED ON DRUMS USED IN SERIES FOR TRAFFIC CHANNELIZATION. DRUMS SHALL BE WEIGHTED WITH SAND TO THE EXTENT INDICATED IN THE PLANS.
2. CWI-8 CHEVRON SIGNS, CWI-6A ARROW SIGNS OR VP-I VERTICAL PANELS MOUNTED ABOVE DRUMS MAY BE USED AS SUPPLEMENTS TO DRUM DELINEATION.

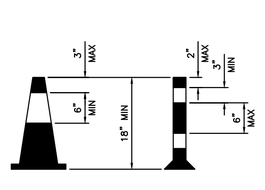

CONES

1. TRAFFIC CONES AND TUBULAR MARKERS SHALL BE A MIN OF 18" INCHES IN HEIGHT WITH A BROADENED BASE AND MAY BE MADE OF VARIOUS MATERIALS TO WITHSTAND IMPACT WITHOUT DAMAGE TO THEMSELVES OR TO VEHICLES. LARGER SIZES SHOULD BE USED ON FREEWAYS AND OTHER ROADWAYS WHERE SPEED ARE RELATIVELY HIGH OR WHERE EVER MORE CONSPICUOUS GUIDANCE IS NEEDED, ORANGE SHALL BE THE PREDOMINANT COLOR ON CONES AND TUBULAR MARKERS. THEY SHOULD BE KEPT CLEAN AND BRIGHT FOR MAX TARGET VALUE. FOR NIGHT TIME USE THEY SHALL BE REFLECTORIZED OR EQUIPPED WITH LIGHTING DEVICES FOR MAX VISIBILITY. REFLECTORIZED MATERIAL SHALL HAVE A SMOOTH, SEALED OUTER SURFACE WHICH WILL DISPLAY THE SAME APPROX COLOR DAY AND NIGHT.
2. REFLECTORIZATION OF TUBULAR MARKERS SHALL BE A MIN OF TWO THREE-INCH BANDS PLACED A MAX OF 2" FROM THE TOP WITH A MAX OF 6" BETWEEN THE BANDS. REFLECTORIZATION OF CONES SHALL BE PROVIDED BY A MIN 6" BAND PLACED A MAX OF 3" FROM THE TOP.
3. CONES OR TUBULAR MARKERS ARE GENERALLY ONLY SUITABLE FOR TEMPORARY USAGE (UP TO 8 HOURS) WITH OTHER CHANNELIZATION DEVICES SUCH AS VERTICAL PANELS OR BARRICADES PREFERRED FOR LONGER TERM USAGE. CARE SHOULD BE TAKEN TO INSURE THAT THEY REMAIN IN THEIR PROPER LOCATION AND IN AN UPRIGHT POSITION.

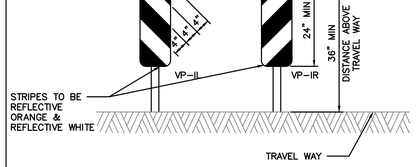

VERTICAL PANELS (VP)

VERTICAL PANELS ARE NORMALLY USED AS CHANNELIZING DEVICES TO INDICATE TANGENT OR NEARLY TANGENT ROADWAY ALIGNMENT WHERE GOOD TARGET VALUE OF A DEVICE IS NEEDED IN DAYTIME AS WELL AS THE NIGHTTIME. IN ADDITION, VERTICAL PANELS SHOULD BE USED AT THE EDGE OF SHOULDER DROP-OFFS AND OTHER SUCH AREAS AS LANE TRANSITIONS WHERE POSITIVE DAY AND NIGHT DELINEATION MAY BE REQUIRED. VERTICAL PANELS SHOULD BE MOUNTED BACK TO BACK IF USED AT THE EDGE OF CUTS ADJACENT TO TWO-WAY TWO LANE ROADWAYS. STRIPES SHOULD ALWAYS SLOPE DOWNWARD TOWARD THE TRAVELED WAY.

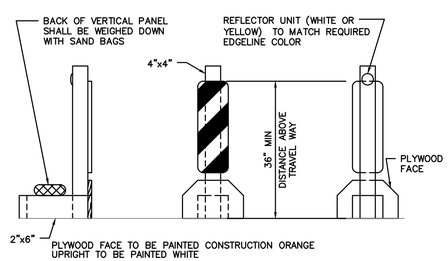

TYPICAL PORTABLE VERTICAL PANEL OR DELINEATOR

OTHER SIMILAR SUPPORTS MAY BE USED WHEN APPROVED BY TMUTCD AND DIRECTED BY THE CITY OF HOUSTON.

APPROVED BY:	APPROVED BY:
Docusigned by: Sukul kauwar — 8EF8B0C6417F479...	Docusigned by: LIHING NGUYEN — 9AA296FDA75B4CD...
CITY ENGINEER	CITY TRAFFIC ENGINEER
APPROVED BY: Docusigned by: Carl Haddock — A9DC410B72B3403...	
DIRECTOR OF HOUSTON PUBLIC WORKS	
EFF DATE: NOV-27-2023	DWG NO: 01555-14

CITY OF HOUSTON
HOUSTON PUBLIC WORKS STANDARD

BARRICADE AND CHANNELIZING DEVICES

	FOR CITY OF HOUSTON USE ONLY
DRAWING SCALE	
NOT TO SCALE	

RPS
A TETRA TECH COMPANY
Texas PE Firm Reg. #F-929
575 N. Dairy Ashford, Suite 700,
Houston, Texas 77079
T +1 281 589 7257
E usinfrastructure@rpsgroup.com

SURVEYED BY: KUO Inc.
FB NO. F-4578

This document is released for the purposes of interim review only under the authority of:

Jeremy Austin, P.E.
Texas P.E. No. 116816
09/11/2026

It is not to be used for bidding, construction, or permitting purposes.

CITY OF HOUSTON
HOUSTON PUBLIC WORKS

LIFT STATION REHABILITATION & RECONSTRUCTION

TRAFFIC CONTROL DETAILS
(SHEET 13 OF 15)
STD-C-40

WBS NUMBER	FOR CITY OF HOUSTON USE ONLY
R-000267-178A-3	
DRAWING SCALE	
AS NOTED	
CITY OF HOUSTON PM	
TAHA LOTIA	
SHEET NO. 106 OF 147	

FILE PATH: C:\Users\andres.martinezjr\DC\ACCDocs\Tetra Tech Inc\200-317106-24001 COH LS Rehab Design\Project Files\CAD\R-000267-178A-3_STD_C_40.dwg

DocuSign Envelope ID: CB71C116-B716-4899-A5EE-0D2F2CC55AF6

DISCLAIMER:
THE USE OF THIS STANDARD IS GOVERNED BY THE TEXAS ENGINEERING PRACTICE ACT. THE DESIGN REQUIREMENTS ON THIS STANDARD DO NOT PURPORT TO ADDRESS ALL OF THE SAFETY CONCERNS ASSOCIATED WITH THEIR USE. THE ENGINEER OF RECORD (EOR) IS TO REVIEW THESE DESIGN REQUIREMENTS AND BY AUTHORIZING THEIR USE, ACCEPTS RESPONSIBILITY FOR THEIR APPLICABILITY, ADEQUACY AND SAFETY. NO WARRANTY OF ANY KIND IS MADE BY THE CITY OF HOUSTON FOR ANY PURPOSES WHATSOEVER. THE CITY OF HOUSTON ASSUMES NO RESPONSIBILITY FOR INCORRECT RESULTS OR DAMAGES RESULTING FROM ITS USE.

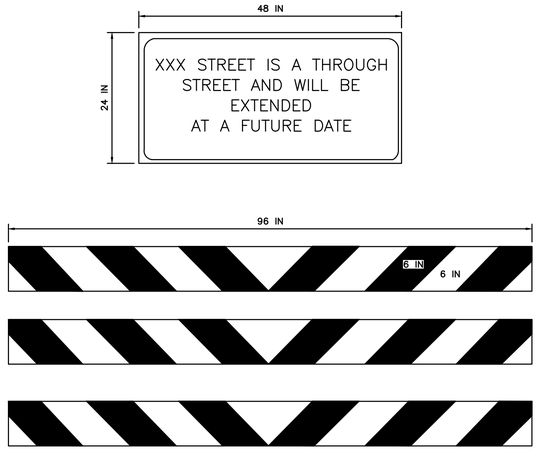

TYPE III BARRICADE
TYPICAL END OF ROAD BARRICADE

TYPE III BARRICADE
FOR END OF ROAD

NOTES:

1. FONT SHALL BE HWY GOTHIC C, 4 INCH HEIGHT.
2. REFER TO STANDARD DETAIL NO. 01555-14 FOR TYPE III BARRICADE DETAIL.
3. FOR TYPE III BARRICADE FOR END OF ROAD, THE THREE (3) RAILS SHALL BE REFLECTIVE RED AND REFLECTIVE WHITE STRIPES ON SIDE FACING TRAFFIC.

CITY OF HOUSTON HOUSTON PUBLIC WORKS STANDARD	
END OF STREET SIGN (SCALE: NOT TO SCALE)	
APPROVED BY:	
DocuSigned by: Sulail Kanwar 9EF850C841F5478... CITY ENGINEER	DocuSigned by: Carl Haddock A80C41057283453... DIRECTOR OF HPW
DocuSigned by: KHANG NGUYEN 95A29EFDA7564CD... CITY TRAFFIC ENGINEER	
EFF DATE: NOV-27-2023	DWG NO: 01555-15

DocuSign Envelope ID: CB71C116-B716-4899-A5EE-0D2F2CC55AF6

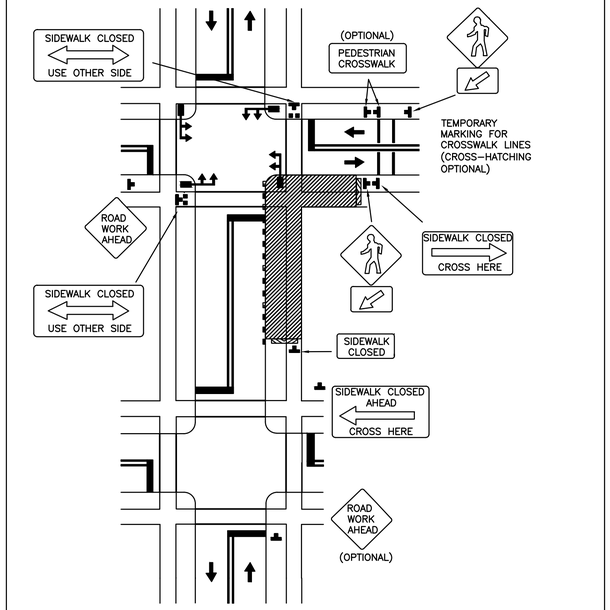

DISCLAIMER:
THE USE OF THIS STANDARD IS GOVERNED BY THE TEXAS ENGINEERING PRACTICE ACT. THE DESIGN REQUIREMENTS ON THIS STANDARD DO NOT PURPORT TO ADDRESS ALL OF THE SAFETY CONCERNS ASSOCIATED WITH THEIR USE. THE ENGINEER OF RECORD (EOR) IS TO REVIEW THESE DESIGN REQUIREMENTS AND BY AUTHORIZING THEIR USE, ACCEPTS RESPONSIBILITY FOR THEIR APPLICABILITY, ADEQUACY AND SAFETY. NO WARRANTY OF ANY KIND IS MADE BY THE CITY OF HOUSTON FOR ANY PURPOSES WHATSOEVER. THE CITY OF HOUSTON ASSUMES NO RESPONSIBILITY FOR INCORRECT RESULTS OR DAMAGES RESULTING FROM ITS USE.

CITY OF HOUSTON HOUSTON PUBLIC WORKS STANDARD		
CROSSWALK CLOSURES AND PEDESTRIAN DETOURS (SCALE: NOT TO SCALE)		
APPROVED BY:		
DocuSigned by: Sulail Kanwar 9EF850C841F5478... CITY ENGINEER	DocuSigned by: KHANG NGUYEN 95A29EFDA7564CD... CITY TRAFFIC ENGINEER	DocuSigned by: Carl Haddock A80C41057283453... DIRECTOR OF HPW
EFF DATE: NOV-27-2023	DWG NO: 01555-16	

RPS
A TETRA TECH COMPANY
Texas PE Firm Reg. #F-929
575 N. Dairy Ashford, Suite 700,
Houston, Texas 77079
T +1 281 589 7257
E usinfrastructure@rpsgroup.com

SURVEYED BY: KUO Inc.
FB NO. F-4578

This document is released for the purposes of interim review only under the authority of:

Jeremy Austin, P.E.
Texas P.E. No. 116816
09/11/2026

It is not to be used for bidding, construction, or permitting purposes.

CITY OF HOUSTON
HOUSTON PUBLIC WORKS

LIFT STATION REHABILITATION & RECONSTRUCTION

TRAFFIC CONTROL DETAILS
(SHEET 14 OF 15)
STD-C-41

WBS NUMBER	FOR CITY OF HOUSTON USE ONLY
R-000267-178A-3	
DRAWING SCALE	
AS NOTED	
CITY OF HOUSTON PM	
TAHA LOTIA	
SHEET NO. 107 OF 147	

FILE PATH: C:\Users\andres.martinezjr\DC\ACCDocs\Tetra Tech Inc\200-317106-24001 COH LS Rehab Design\Project Files\CAD\R-000267-...

DocuSign Envelope ID: CB71C116-B716-4899-A5EE-0D2F2CC55AF6

FILE PATH: C:\Users\andres.martinezjr\DC\ACCDocs\Tetra Tech Inc\200-317106-24001 COH LS Rehab Design\Project Files\CAD\R-000267-178A-3_STD_C-42_TRAFFIC CONTROL DETAILS.dwg
PLOT DATE: 9/9/2026 3:03:31 PM

DISCLAIMER:
THE USE OF THIS STANDARD IS GOVERNED BY THE TEXAS ENGINEERING PRACTICE ACT. THE DESIGN REQUIREMENTS ON THIS STANDARD DO NOT PURPORT TO ADDRESS ALL OF THE SAFETY CONCERNS ASSOCIATED WITH THEIR USE. THE ENGINEER OF RECORD (EOR) IS TO REVIEW THESE DESIGN REQUIREMENTS AND BY AUTHORIZING THEIR USE, ACCEPTS RESPONSIBILITY FOR THEIR APPLICABILITY, ADEQUACY AND SAFETY. NO WARRANTY OF ANY KIND IS MADE BY THE CITY OF HOUSTON FOR ANY PURPOSES WHATSOEVER. THE CITY OF HOUSTON ASSUMES NO RESPONSIBILITY FOR INCORRECT RESULTS OR DAMAGES RESULTING FROM ITS USE.

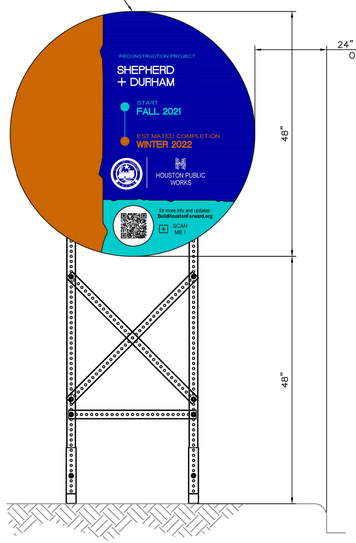

FRONT VIEW

PROJECT SIGN – 48"

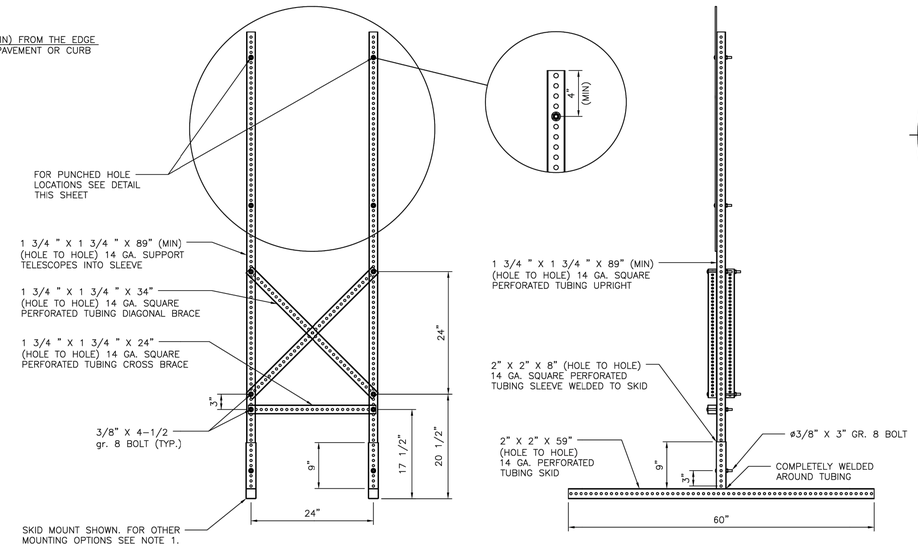

FRONT VIEW

SIDE VIEW

SKID MOUNTED SUPPORTS FOR 48" PROJECT SIGN

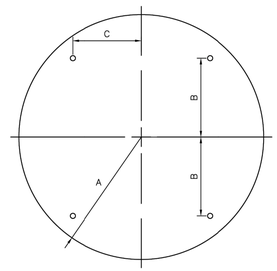

CIRCLE

A	B	C	T
24"	15"	12"	0.080"

48" SIGN PLATE HOLE DETAIL

NOTES:

1. ALLOWABLE POST INSTALLATION METHODS ARE: CONCRETE FOOTING, SURFACE MOUNTING, SKID MOUNTING AND PILE DRIVEN POSTS.
2. FOR POST INSTALLATION WITH CONCRETE FOOTING, REFER TO DETAIL 01554–01.
3. FOR SURFACE MOUNTED POST INSTALLATION, REFER TO DETAIL 01554–02.
4. FOR SKID MOUNTING REQUIREMENTS REFER TO SPECIFICATION 01582.
5. PILE DRIVEN POSTS MUST BE DRIVEN TO A MINIMUM DEPTH OF 4–FEET INTO EXISTING GROUND.
6. LAYOUT, TEXT SIZE, AND OVERALL DESIGN OF THE SIGN WILL BE THE RESPONSIBILITY OF THE BUILD HOUSTON COORDINATOR.
7. ALL SIGN POSTS, SIGN TUBING, AND SIGN FASTENERS SHALL BE GALVANIZED STEEL PER SPECIFICATION 01582.

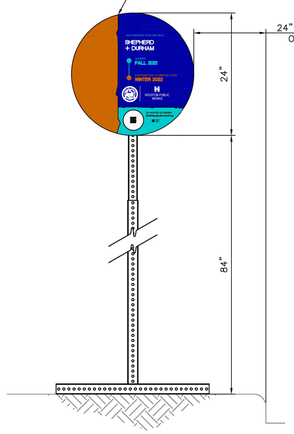

FRONT VIEW

PROJECT SIGN – 24"

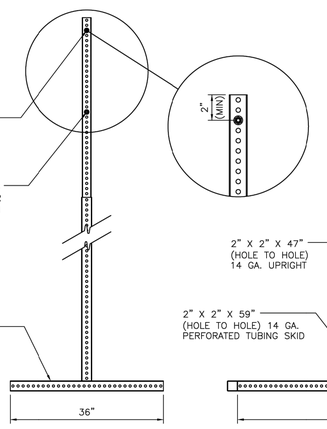

FRONT VIEW

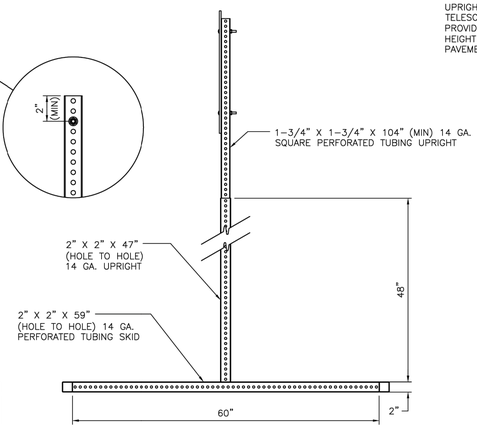

SIDE VIEW

SKID MOUNTED SUPPORTS FOR 24" PROJECT SIGN

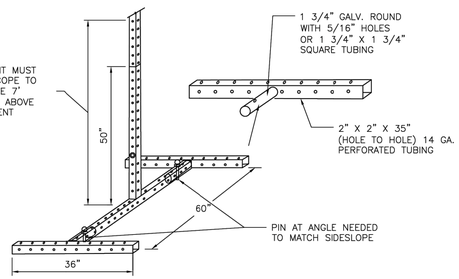

ISO VIEW

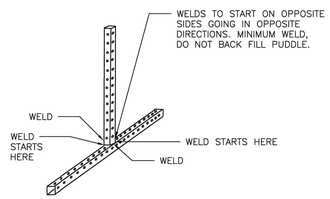

ISO VIEW

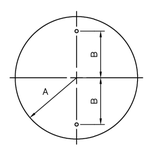

A	B	C
12"	8"	0.080"

24" SIGN PLATE HOLE DETAIL

APPROVED BY:	APPROVED BY:
DocuSigned by: Sidrat Tasneem 3EF8B0C5A1F547B...	DocuSigned by: Carl Haldeboek 5B5A1587B5A843...
CITY ENGINEER	DIRECTOR OF HOUSTON PUBLIC WORKS
EFF DATE: NOV–27–2023	DWG NO: 01582–01

CITY OF HOUSTON
HOUSTON PUBLIC WORKS STANDARD

CONSTRUCTION SIGN BUILD HOUSTON FORWARD

DRAWING SCALE
NOT TO SCALE

FOR CITY OF HOUSTON USE ONLY

TETRA TECH COMPANY
Texas PE Firm Reg. #F-929
575 N. Dairy Ashford, Suite 700,
Houston, Texas 77079
T +1 281 589 7257
E usinfrastructure@rpsgroup.com

SURVEYED BY: KUO Inc.
FB NO. F–4578

This document is released for the purposes of interim review only under the authority of:

Jeremy Austin, P.E.
Texas P.E. No. 116816
09/11/2026

It is not to be used for bidding, construction, or permitting purposes.

CITY OF HOUSTON
HOUSTON PUBLIC WORKS

LIFT STATION REHABILITATION & RECONSTRUCTION

TRAFFIC CONTROL DETAILS
(SHEET 15 OF 15)
STD–C–42

WBS NUMBER	FOR CITY OF HOUSTON USE ONLY
R–000267–178A–3	
DRAWING SCALE	
AS NOTED	
CITY OF HOUSTON PM	
TAHA LOTIA	
SHEET NO. 108 OF 147	

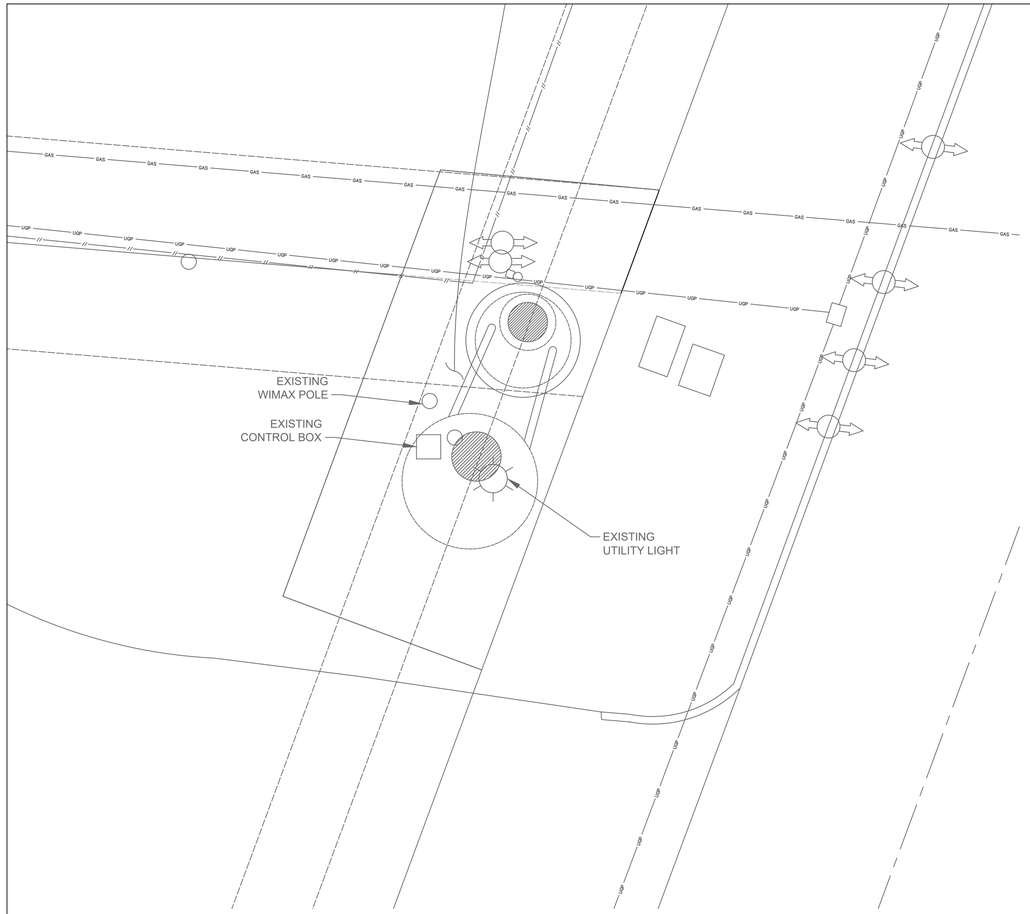

TRAILWOOD LIFT STATION
EXISTING SITE

PLAN

1"=5'-0"

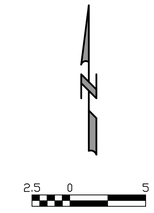

RPS
A TETRA TECH COMPANY
Texas PE Firm Reg. #F-929
575 N. Dairy Ashford, Suite 700,
Houston, Texas 77079
T +1 281 589 7257
E usinfrastructure@rpsgroup.com

SURVEYED BY:
FB NO. F-4578

FOR INTERIM REVIEW ONLY NOT INTENDED FOR PERMIT, BIDDING OR CONSTRUCTION PURPOSES.
ENGINEER:
HOSS FOROUZAN
P.E. SERIAL NO.77748
09/08/2026

CITY OF HOUSTON

HOUSTON PUBLIC WORKS

RECONSTRUCTION & REHABILITATION
COH LIFT STATIONS

TRAILWOOD LIFT STATION
EXISTING SITE PLAN

WBS NUMBER	FOR CITY OF HOUSTON USE ONLY
R-000267-00178-3	
DRAWING SCALE	
AS NOTED	
CITY OF HOUSTON PM	
TAHA LOTIA	
SHEET NO. 109 OF 147	

TW-E-1

FILE PATH: O:\H8109_Lift Station Rehabilitation And Reconstruction (Tetratech)\6 Drawings\Electrical\Working\Package No.1\Trailwood\Trailwood_COH.ctb
PLOTTED: 9/8/2026 4:59 PM

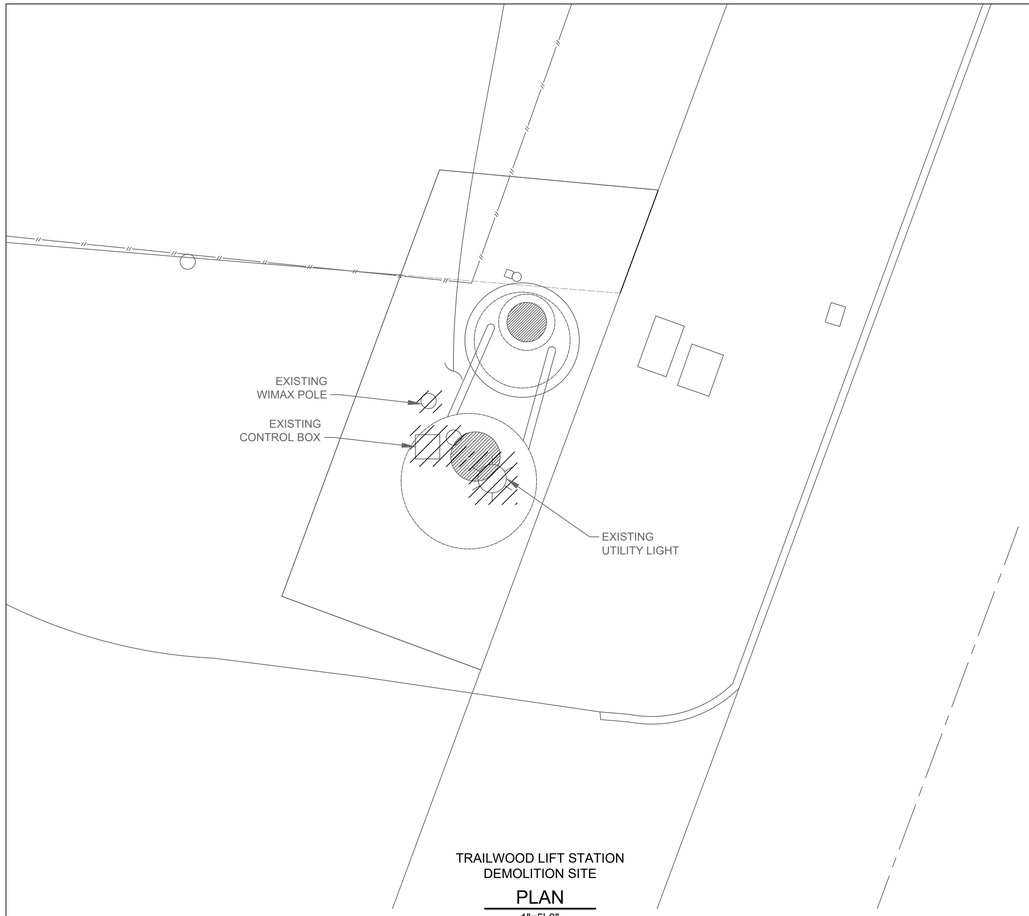

TRAILWOOD LIFT STATION
DEMOLITION SITE

PLAN

1"=5'-0"

EXISTING CONTROL
BOX

PHOTOGRAPH A - 2

NTS

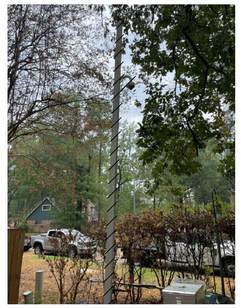

EXISTING WIMAX
POLE

PHOTOGRAPH B - 2

NTS

EXISTING UTILITY
LIGHT

PHOTOGRAPH C - 3

NTS

NOTES BY SYMBOL "#":

1. EXISTING WIMAX POLE TO BE DEMOLISHED AND REMOVED.
2. EXISTING CONTROL BOX TO BE DEMOLISHED AND REMOVED.
3. EXISTING UTILITY LIGHT TO BE DEMOLISHED AND REMOVED.
4. EXISTING CONTROL PANEL & OVERHEAD LIGHT INSIDE VAULT TO BE DEMOLISHED AND REMOVED.

EXISTING CONTROL PANEL
& OVERHEAD LIGHT

PHOTOGRAPH D - 4

NTS

N

2.5 0 5

SCALE: 1" = 5'

RPS
A TETRA TECH COMPANY
Texas PE Firm Reg. #F-929
575 N. Dairy Ashford, Suite 700,
Houston, Texas 77079
T +1 281 589 7257
E usinfrastructure@rpsgroup.com

SURVEYED BY:
FB NO. F-4578

FOR INTERIM REVIEW ONLY NOT INTENDED FOR PERMIT, BIDDING OR CONSTRUCTION PURPOSES.
ENGINEER:
HOSS FOROUZAN
P.E. SERIAL NO.77748
09/08/2026

CITY OF HOUSTON
HOUSTON PUBLIC WORKS

RECONSTRUCTION & REHABILITATION
COH LIFT STATIONS

TRAILWOOD LIFT STATION DEMOLITION SITE PLAN

WBS NUMBER	FOR CITY OF HOUSTON USE ONLY
R-000267-00178-3	
DRAWING SCALE	
AS NOTED	
CITY OF HOUSTON PM	
TAHA LOTIA	
SHEET NO. 110 OF 147	

TW-E-2

PLOTTED: 9/8/2026 4:59 PM
FILE PATH: O:\H8109_Lift Station Rehabilitation And Reconstruction (Tetratech)\6 Drawings\Electrical\Working\Package No.1\Trailwood\Trailwood_PLOT-02.dwg GAI.ctb

DEMOLITION NOTES

1. CONTRACTOR SHALL COORDINATE DEMOLITION OF THE ELECTRICAL CONDUIT, WIRE, EQUIPMENT AND DEVICES WITH GENERAL DEMOLITION AND SCHEDULE. DRAWINGS ARE INTENDED TO CONVEY THE GENERAL NATURE AND SCOPE OF DEMOLITION WORK. EVERY ITEM TO BE DEMOLISHED MAY NOT BE SHOWN. FIELD VERIFY WITH OWNER PRIOR TO BID, AND INCLUDE ALL DEMOLITION WORK IN THE CONTRACT PRICE.

2. ALL CONDUCTORS BEING DEMOLISHED SHALL BE DISCONNECTED AND REMOVED FROM THE LOAD TO THE SOURCE. SURFACE MOUNTED CONDUITS AND MOUNTING HARDWARE SHALL BE REMOVED. UNDERGROUND CONDUITS WHICH ARE NOT BEING REMOVED OR OTHERWISE NOT BEING MADE UNUSABLE SHALL BE CUT AND FILLED WITH CONCRETE MATERIAL.

3. THE OWNER HAS THE RIGHT OF FIRST REFUSAL TO THE EQUIPMENT BEING REMOVED. CONTRACTOR SHALL DELIVER THE EQUIPMENT WHICH OWNER WISHES TO KEEP AT LOCATION DESIGNATED BY THE OWNER. SEE SPECIFICATIONS SECTION FOR ELECTRICAL DEMOLITION. ALL EQUIPMENT SHOWN PER DETAIL A-F TO BE TRANSMITTED TO WASTEWATER OPERATIONS FOR REUSE.

4. THE CONTRACTOR SHALL NOT MAKE ANY MODIFICATIONS TO THE EXISTING ELECTRICAL EQUIPMENT UNTIL THE FOLLOWING HAS BEEN DONE. A FORM SHALL BE GENERATED BY THE CONTRACTOR TO RECORD THE OBSERVATIONS. BOTH PARTIES SHALL SIGN ON THE FORM. INSTRUCTIONS SHALL BE PROVIDED FOR CONTRACTOR TO COORDINATE WITH CITY PROJECT ENGINEER FOR DEMOLITION AND REMOVAL OF ELECTRICAL SERVICE THROUGH GSD DEPARTMENT (REFER TO ELECTRICAL DEMOLITION SPECIFICATION 16060 FOR DETAIL).

rps
A TETRA TECH COMPANY
Texas PE Firm Reg. #F-929
575 N. Dairy Ashford, Suite 700,
Houston, Texas 77079
T +1 281 589 7257
E usinfrastructure@rpsgroup.com

FOR INTERIM REVIEW ONLY NOT INTENDED FOR PERMIT, BIDDING OR CONSTRUCTION PURPOSES.
ENGINEER:
HOSS FOROUZAN
P.E. SERIAL NO.77748
09/08/2026

SURVEYED BY:
FB NO. F-4578

CITY OF HOUSTON
HOUSTON PUBLIC WORKS

RECONSTRUCTION & REHABILITATION
COH LIFT STATIONS

TRAILWOOD LIFT STATION
DEMOLITION NOTES

WBS NUMBER	FOR CITY OF HOUSTON USE ONLY
R-000267-00178-3	
DRAWING SCALE	
AS NOTED	
CITY OF HOUSTON PM	
TAHA LOTIA	
SHEET NO. 111 OF 147	

TW-E-3

FILE PATH: O:\H8109_Lift Station Rehabilitation And Reconstruction (Tetratech)\6 Drawings\Electrical\Working\Package No.1\Trailwood\Trailwood_GAI.ctb
PLOTTED: 9/8/2026 4:59 PM

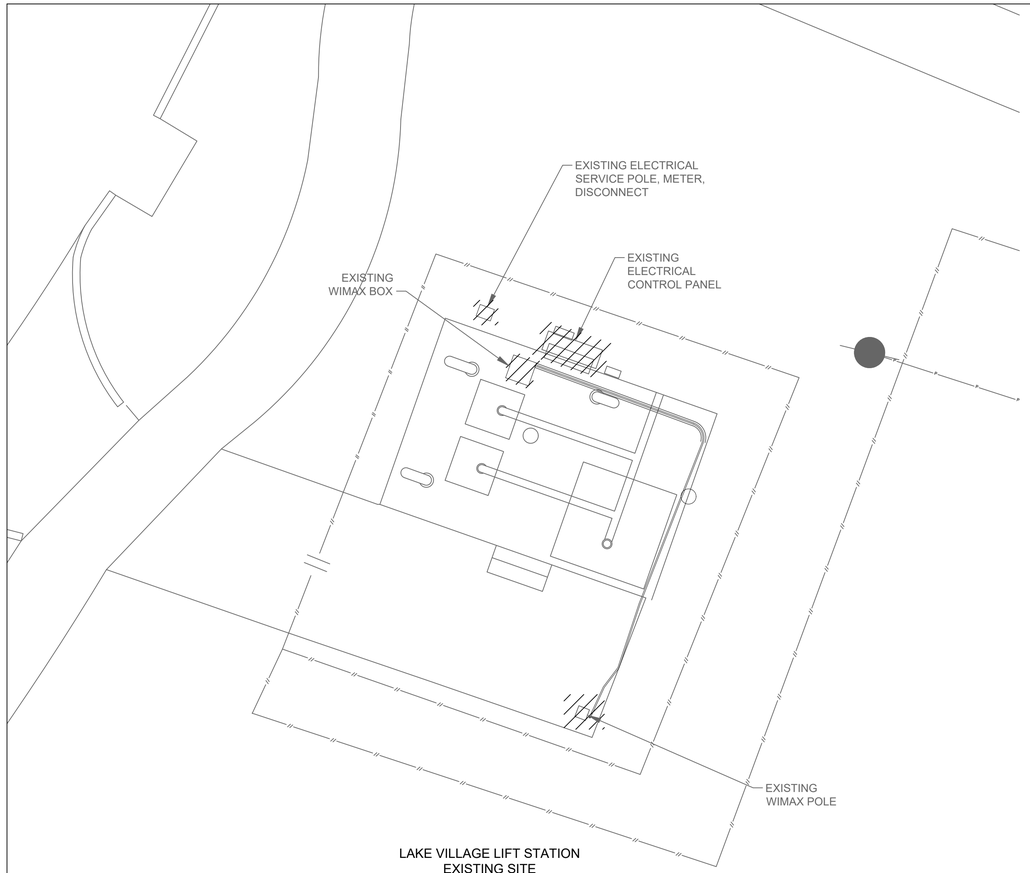

LAKE VILLAGE LIFT STATION
EXISTING SITE

PLAN

1"=5'-0"

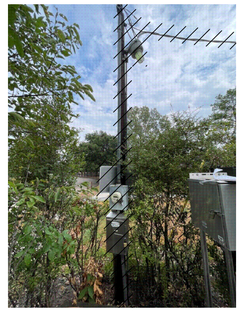

EXISTING SERVICE POLE
& METER DISCONNECT

PHOTOGRAPH A - 1

NTS

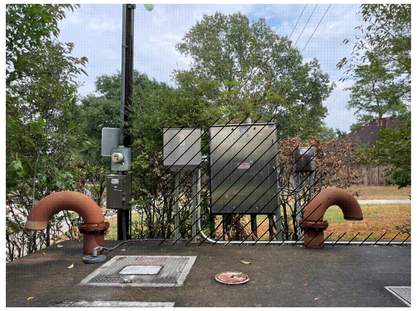

EXISTING CONTROL PANEL
& WIMAX BOX & LEVEL TRANSMITTER

PHOTOGRAPH B - 2

NTS

EXISTING WIMAX
POLE

PHOTOGRAPH C - 3

NTS

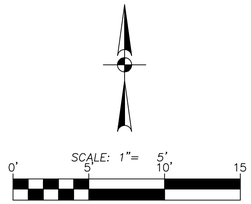

NOTES BY SYMBOL "#":

1. EXISTING ELECTRICAL SERVICE POLE & METER DISCONNECT TO BE DEMOLISHED AND REMOVED.
2. EXISTING CONTROL PANEL, WIMAX BOX, & LEVEL TRANSMITTER TO BE DEMOLISHED AND REMOVED.
3. EXISTING WIMAX POLE TO BE DEMOLISHED AND REMOVED.

RPS A TETRA TECH COMPANY
Texas PE Firm Reg. #F-929
575 N. Dairy Ashford, Suite 700,
Houston, Texas 77079
T +1 281 589 7257
E usinfrastructure@rpsgroup.com

FOR INTERIM REVIEW
ONLY NOT INTENDED FOR
PERMIT, BIDDING OR
CONSTRUCTION PURPOSES.
ENGINEER:
HOSS FOROUZAN
P.E. SERIAL NO.77748
09/08/2026

SURVEYED BY:
FB NO. F-4578

CITY OF HOUSTON
HOUSTON PUBLIC WORKS

RECONSTRUCTION & REHABILITATION
COH LIFT STATIONS

LAKE VILLAGE LIFT STATION DEMOLITION SITE PLAN

WBS NUMBER	FOR CITY OF HOUSTON USE ONLY
R-000267-00178-3	
DRAWING SCALE	
AS NOTED	
CITY OF HOUSTON PM	
TAHA LOTIA	
SHEET NO. 112 OF 147	

LV-E-1

PLOTTED: 9/8/2026 4:50 PM

FILE PATH: O:\H8109_Lift Station Rehabilitation And Reconstruction (Tetratech)\6 Drawings\Electrical\Working\Package No.1\Lake Village\Lake Village LIFT STATION.dgn

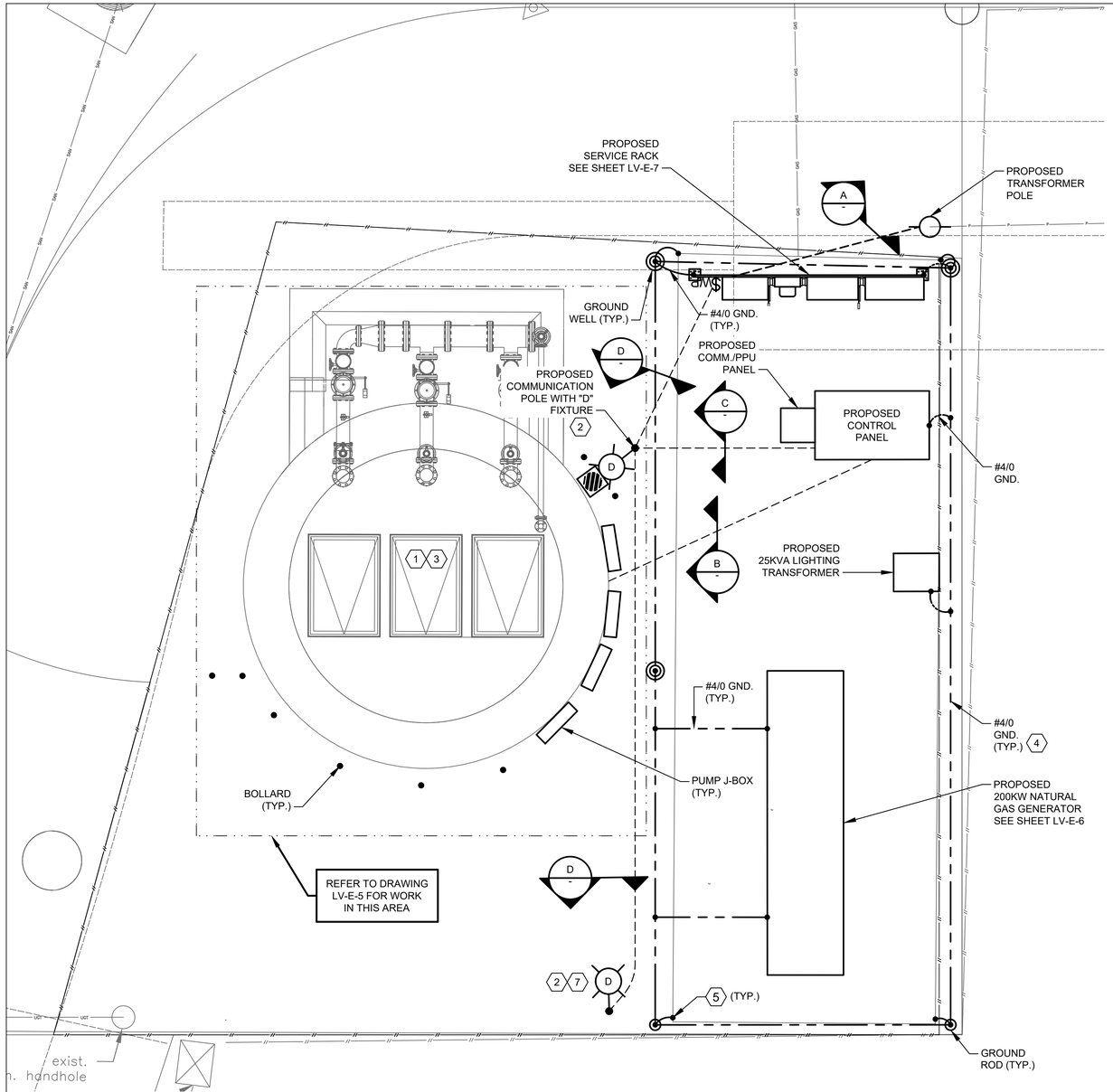

LAKE VILLAGE LIFT STATION
PROPOSED SITE

PLAN 6

1"=3'-0"

NOTES BY SYMBOL "#":

1. THE ELECTRICAL INSTALLATION IN THE WET WELL SHALL BE EXPLOSION PROOF, IN ACCORDANCE WITH THE NATIONAL ELECTRICAL CODE FOR CLASS I, DIVISION 1 LOCATIONS.
2. YARD LIGHT CONTROLLED BY LIGHTING SWITCH.
3. INSIDE WETWELL RATED NEMA CLASS 1, DIV. 1. OUSIDE ABOVE GROUND, AROUND WETWELL RATED CLASS 1, DIV. 2 ACCORDING TO NFPA 820.
4. GROUNDING LOOP SHALL BE BURIED 30" BELOW FINISHED GRADE.
5. #4/0 BARE COPPER GROUND TO BE BONDED TO PAD REBAR.
6. REFER TO SHEET LV-E-6 FOR THE DETAIL OF ELECTRICAL CONDUITS LAYOUT BELOW CONCRETE PAD.
7. TYPE "B" FIXTURE TO BE INSTALLED ON THE POLE PROVIDING WIRES FOR THE "B" LIGHT.

SCALE: 1"= 3'
0' 3' 6' 9'

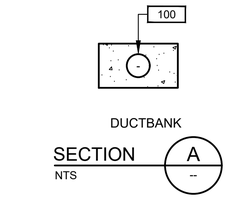

RPS A TETRA TECH COMPANY
Texas PE Firm Reg. #F-929
575 N. Dairy Ashford, Suite 700,
Houston, Texas 77079
T +1 281 589 7257
E usinfrastructure@rpsgroup.com

FOR INTERIM REVIEW ONLY NOT INTENDED FOR PERMIT, BIDDING OR CONSTRUCTION PURPOSES.
ENGINEER:
HOSS FOROUZAN
P.E. SERIAL NO.77748
09/08/2026

SURVEYED BY:
FB NO. F-4578

CITY OF HOUSTON
HOUSTON PUBLIC WORKS

RECONSTRUCTION & REHABILITATION
COH LIFT STATIONS

LAKE VILLAGE LIFT STATION PROPOSED SITE PLAN

WBS NUMBER	FOR CITY OF HOUSTON USE ONLY
R-000267-00178-3	
DRAWING SCALE	
AS NOTED	
CITY OF HOUSTON PM	
TAHA LOTIA	
SHEET NO. 113 OF 147	

LV-E-2

PLOTTED: 9/8/2026 4:50 PM
FILE PATH: O:\H8109_Lift Station Rehabilitation And Reconstruction (Tetratech)\6 Drawings\Electrical\Working\Package No.1\Lake Village\Lake Pa

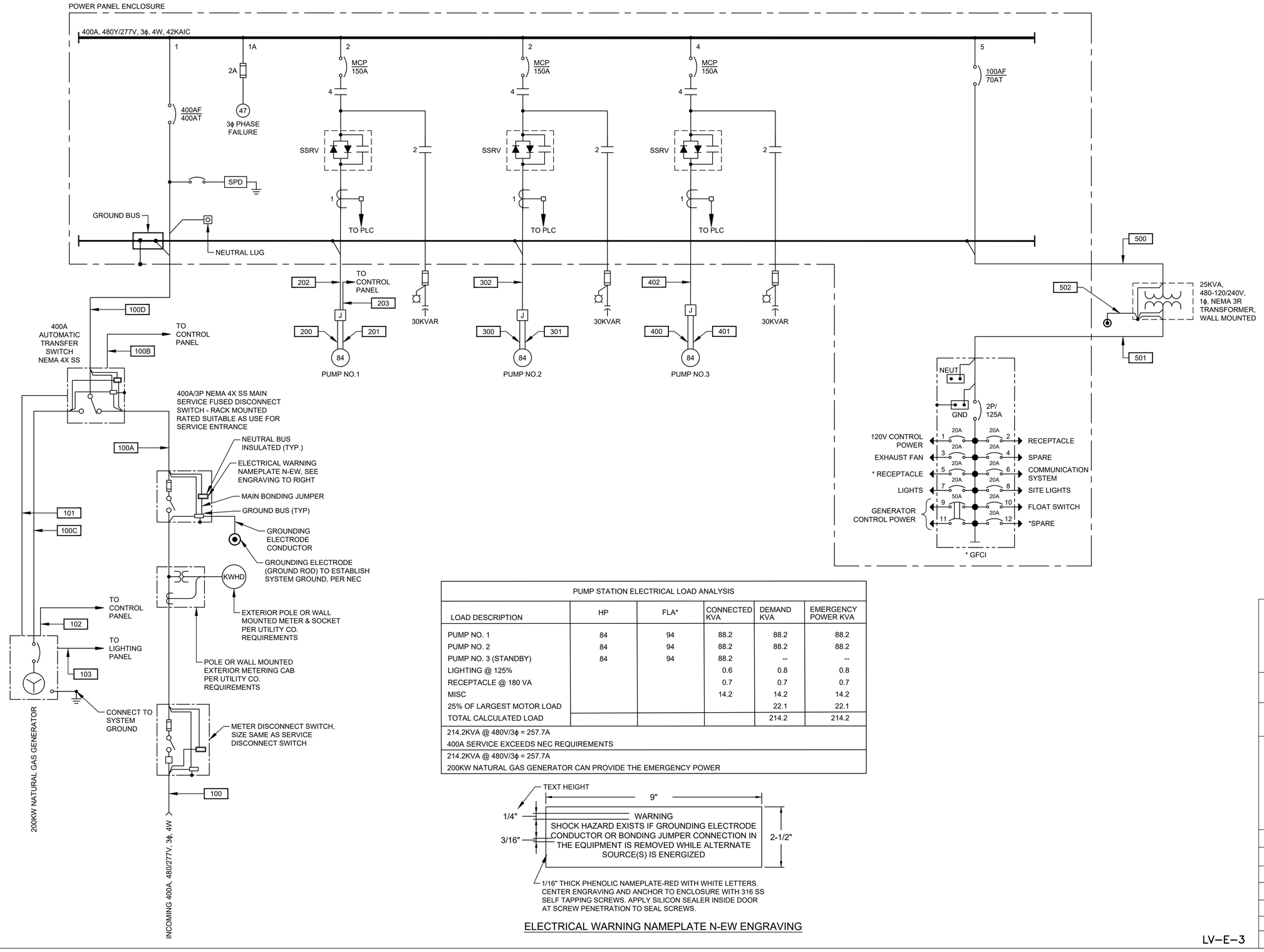

PUMP STATION ELECTRICAL LOAD ANALYSIS					
LOAD DESCRIPTION	HP	FLA*	CONNECTED KVA	DEMAND KVA	EMERGENCY POWER KVA
PUMP NO. 1	84	94	88.2	88.2	88.2
PUMP NO. 2	84	94	88.2	88.2	88.2
PUMP NO. 3 (STANDBY)	84	94	88.2	--	--
LIGHTING @ 125%			0.6	0.8	0.8
RECEPTACLE @ 180 VA			0.7	0.7	0.7
MISC			14.2	14.2	14.2
25% OF LARGEST MOTOR LOAD				22.1	22.1
TOTAL CALCULATED LOAD				214.2	214.2
214.2KVA @ 480V/3ϕ = 257.7A 400A SERVICE EXCEEDS NEC REQUIREMENTS					
214.2KVA @ 480V/3ϕ = 257.7A 200KW NATURAL GAS GENERATOR CAN PROVIDE THE EMERGENCY POWER					

ELECTRICAL WARNING NAMEPLATE N-EW ENGRAVING

RPS
A TETRA TECH COMPANY
Texas PE Firm Reg. #F-929
575 N. Dairy Ashford, Suite 700, Houston, Texas 77079
T +1 281 589 7257
E usinfrastructure@rpsgroup.com

SURVEYED BY:
FB NO. F-4578

FOR INTERIM REVIEW ONLY NOT INTENDED FOR PERMIT, BIDDING OR CONSTRUCTION PURPOSES.
ENGINEER:
HOSS FOROUZAN
P.E. SERIAL NO.77748
09/08/2026

CITY OF HOUSTON
HOUSTON PUBLIC WORKS

RECONSTRUCTION & REHABILITATION
COH LIFT STATIONS

LAKE VILLAGE LIFT STATION SINGLE LINE DIAGRAM

WBS NUMBER	FOR CITY OF HOUSTON USE ONLY
R-000267-00178-3	
DRAWING SCALE	
AS NOTED	
CITY OF HOUSTON PM	
TAHA LOTIA	
SHEET NO. 114 OF 147	

LV-E-3

PLOTTED: 9/8/2026 4:50 PM
FILE PATH: O:\H8109_Lift Station Rehabilitation And Reconstruction (Tetratech)\6 Drawings\Electrical\Working\Package No.1\Lake Village\Lake Village Lift Station SLD.dgn

NOTES:

1. UNLESS OTHERWISE INDICATED, ALL DEVICES WITHOUT FURTHER DESIGNATION ARE LOCATED AT THE CONTROL PANEL.
2. NOT USED.
3. CONTRACTOR TO REVISE DWG. BASED ON MANUFACTURE AND SIZE.
4. CONTRACTOR SHALL TERMINATE POWER & CONTROL WIRES PER MANUFACTURER'S REQUIREMENTS.
5. PROVIDE BREAKER SIZE ACCORDING TO MANUFACTURER'S REQUIREMENTS.
6. NOT USED.
7. CONTRACTOR TO COORDINATE POWER FACTOR CORRECTION CAPACITOR SIZE WITH PUMP MANUFACTURER.

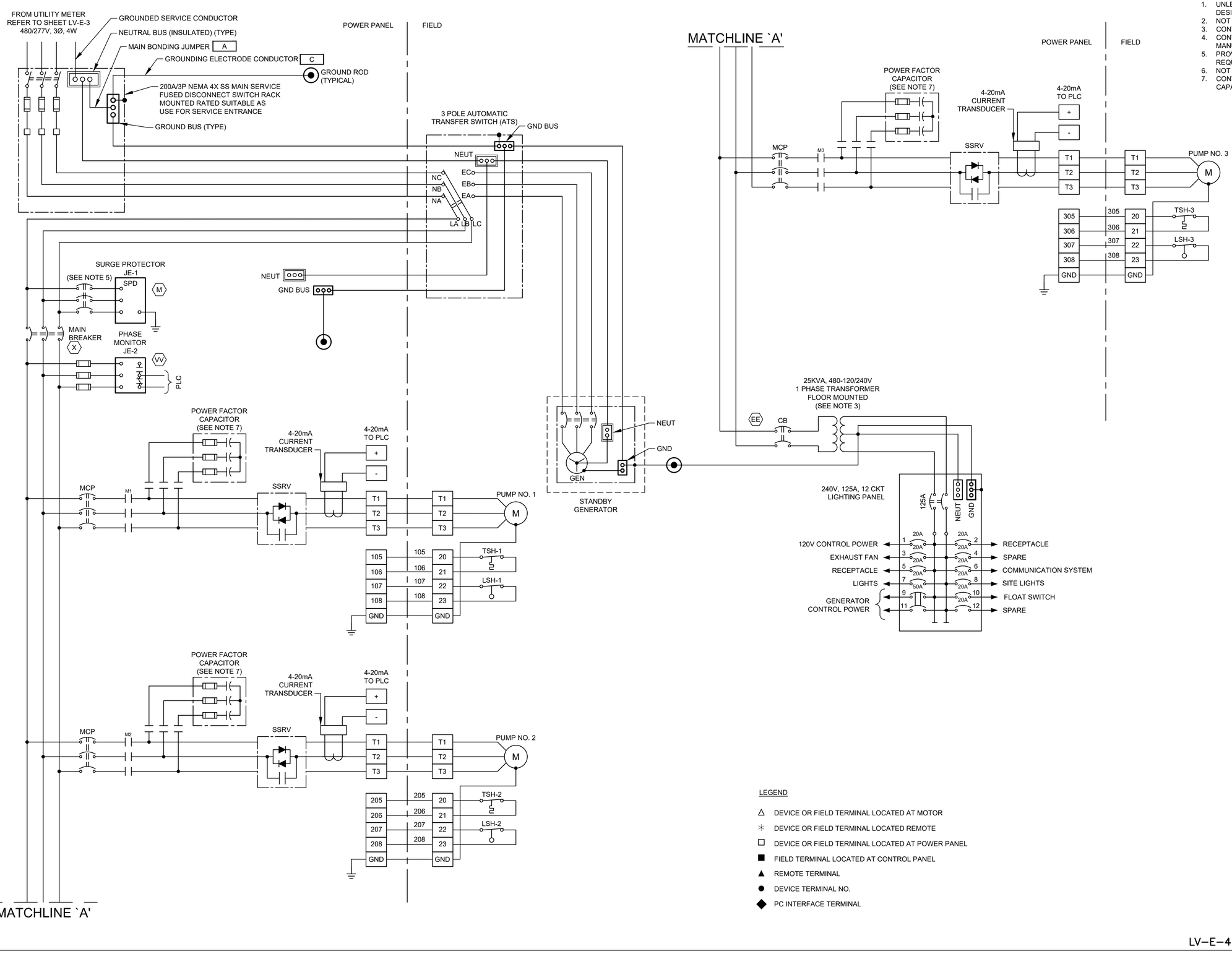

LEGEND

- △ DEVICE OR FIELD TERMINAL LOCATED AT MOTOR
- ✳ DEVICE OR FIELD TERMINAL LOCATED REMOTE
- □ DEVICE OR FIELD TERMINAL LOCATED AT POWER PANEL
- ■ FIELD TERMINAL LOCATED AT CONTROL PANEL
- ▲ REMOTE TERMINAL
- ● DEVICE TERMINAL NO.
- ◆ PC INTERFACE TERMINAL

rps
A TETRA TECH COMPANY
Texas PE Firm Reg. #F-929
575 N. Dairy Ashford, Suite 700,
Houston, Texas 77079
T +1 281 589 7257
E usinfrastructure@rpsgroup.com

FOR INTERIM REVIEW ONLY NOT INTENDED FOR PERMIT, BIDDING OR CONSTRUCTION PURPOSES.
ENGINEER:
HOSS FOROUZAN
P.E. SERIAL NO.77748
09/08/2026

SURVEYED BY:
FB NO. F-4578

CITY OF HOUSTON
HOUSTON PUBLIC WORKS

RECONSTRUCTION & REHABILITATION
COH LIFT STATIONS

LAKE VILLAGE LIFT STATION THREE LINE DIAGRAM

WBS NUMBER	FOR CITY OF HOUSTON USE ONLY
R-000267-00178-3	
DRAWING SCALE	
AS NOTED	
CITY OF HOUSTON PM	
TAHA LOTIA	
SHEET NO. 115 OF 147	

LV-E-4

PLOTTED: 9/8/2026 4:50 PM
FILE PATH: O:\H8109_Lift Station Rehabilitation And Reconstruction (Tetratech)\6 Drawings\Electrical\Working\Package No.1\Lake Village\Lake Village LIFT STATION.dwg

FILE PATH: O:\H8109_Lift Station Rehabilitation And Reconstruction (Tetratech)\6 Drawings\Electrical\Working\Package No.1\Lake Village\Lake Village.dgn
PLOTTED: 9/8/2026 4:50 PM

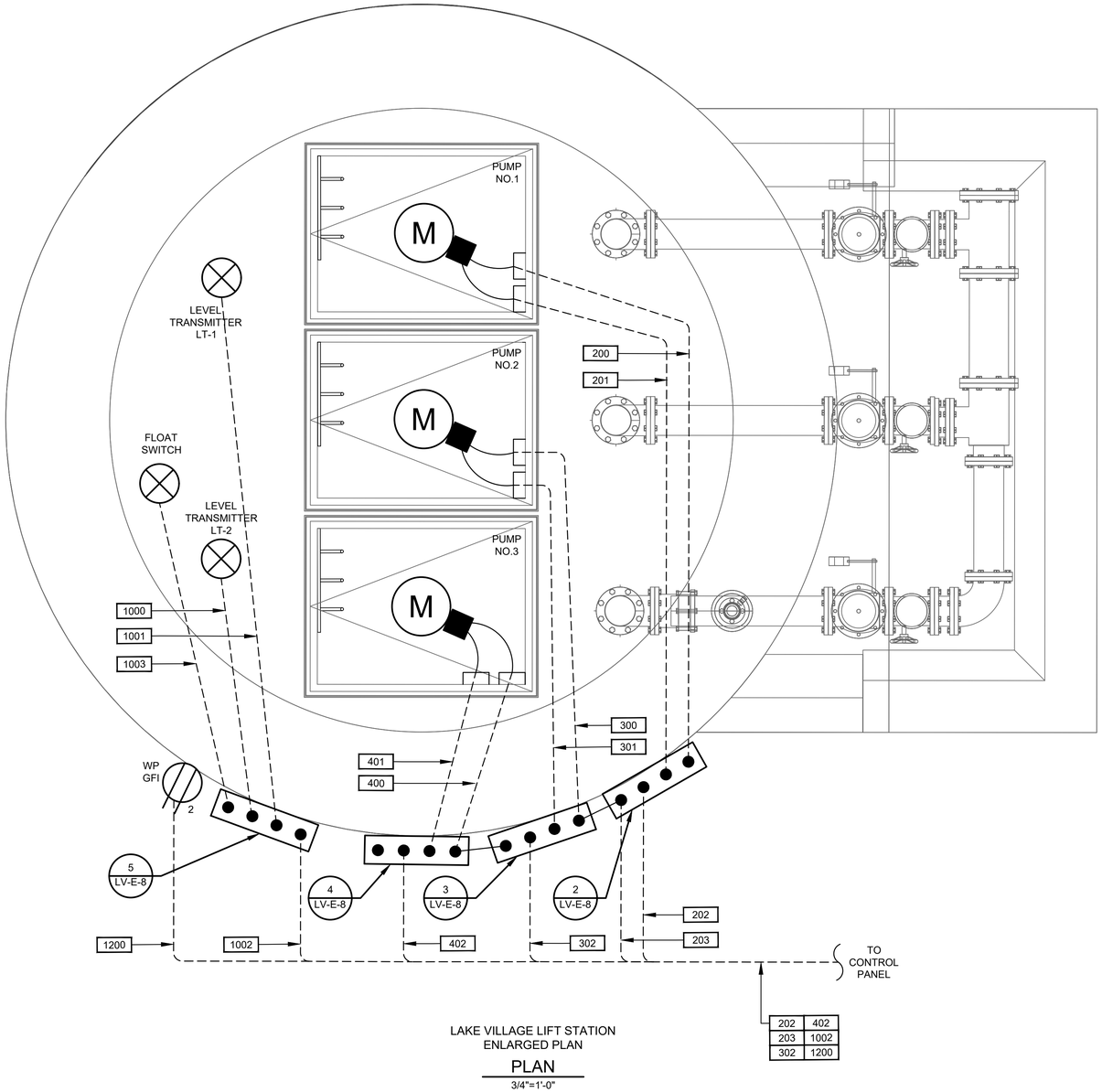

LAKE VILLAGE LIFT STATION
ENLARGED PLAN

PLAN

3/4"=1'-0"

N

6" 0 1 2

SCALE: 3/4" = 1'-0"

RPS
A TETRA TECH COMPANY
Texas PE Firm Reg. #F-929
575 N. Dairy Ashford, Suite 700,
Houston, Texas 77079
T +1 281 589 7257
E usinfrastructure@rpsgroup.com

FOR INTERIM REVIEW ONLY NOT INTENDED FOR PERMIT, BIDDING OR CONSTRUCTION PURPOSES.
ENGINEER:
HOSS FOROUZAN
P.E. SERIAL NO.77748
09/08/2026

SURVEYED BY:
FB NO. F-4578

CITY OF HOUSTON
HOUSTON PUBLIC WORKS

RECONSTRUCTION & REHABILITATION
COH LIFT STATIONS

LAKE VILLAGE LIFT STATION ENLARGED ELECTRICAL LIFT STATION PLAN

WBS NUMBER	FOR CITY OF HOUSTON USE ONLY
R-000267-00178-3	
DRAWING SCALE	
AS NOTED	
CITY OF HOUSTON PM	
TAHA LOTIA	
SHEET NO. 116 OF 147	

LV-E-5

FILE PATH: O:\H8109_Lift Station Rehabilitation And Reconstruction (Tetratech)\6 Drawings\Electrical\Working\Package No.1\Lake Village\Lake Village Lift Station.dgn
PLOTTED: 9/8/2026 4:50 PM

NOTES BY SYMBOL "⟨#⟩":

⟨1⟩ REFER TO STRUCTURAL DRAWINGS FOR CONCRETE PAD DETAILS.

⟨2⟩ GENERATOR IS FOR EMERGENCY USE ONLY.

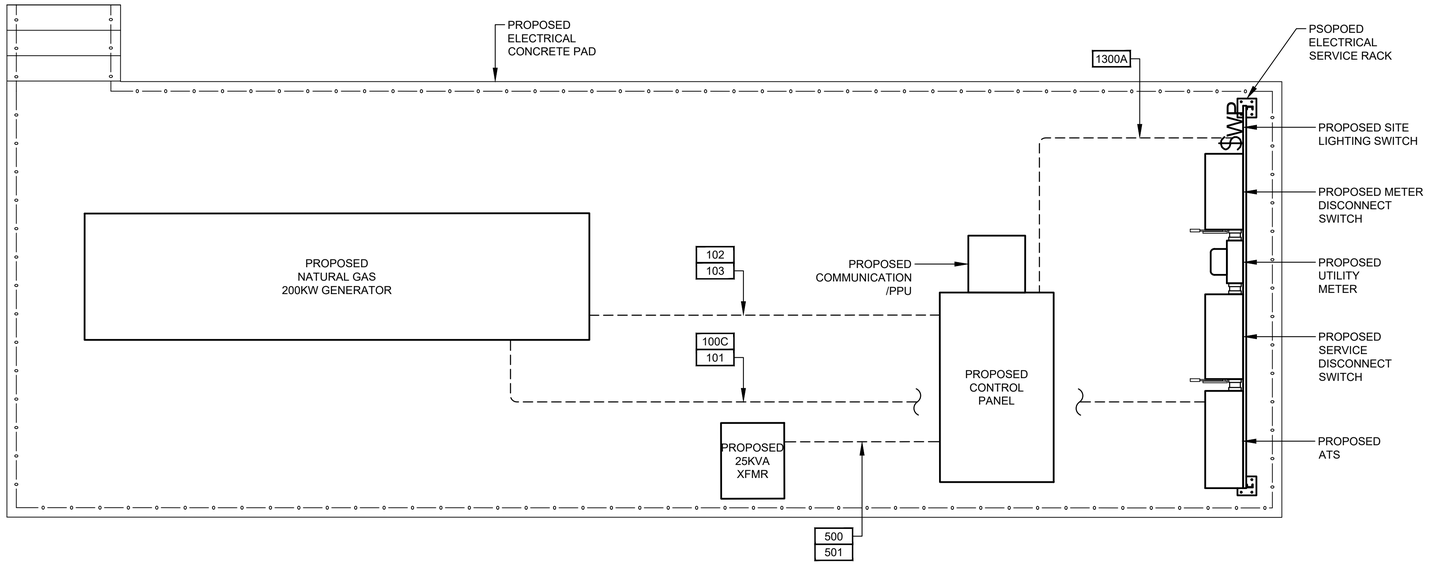

PROPOSED ELECTRICAL CONCRETE PAD LAYOUT

DETAIL 1 - (1) (2)

1/2" = 1'-0"

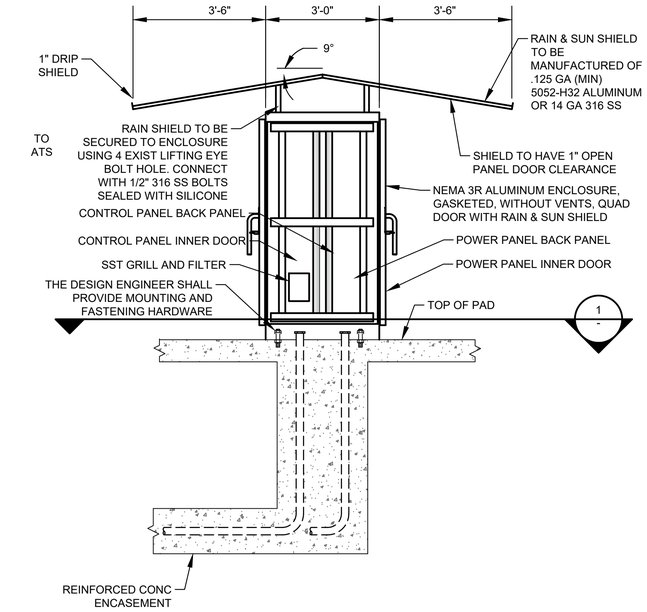

CONTROL CABINET ENCLOSURE WITH ELEVATED CONCRETE PAD

DETAIL 1 -

NTS

(SEE NOTE 6)

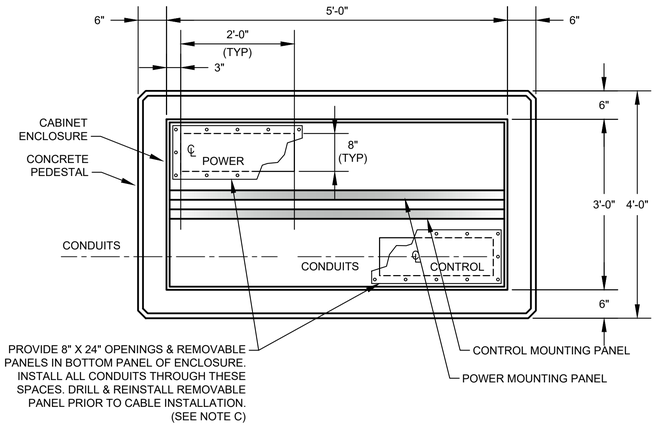

SECTION 1 -

NTS

Texas PE Firm Reg. #F-929
575 N. Dairy Ashford, Suite 700, Houston, Texas 77079
T +1 281 589 7257
E usinfrastructure@rpsgroup.com

FOR INTERIM REVIEW ONLY NOT INTENDED FOR PERMIT, BIDDING OR CONSTRUCTION PURPOSES.
ENGINEER:
HOSS FOROUZAN
P.E. SERIAL NO.77748
09/08/2026

SURVEYED BY:

FB NO. F-4578

CITY OF HOUSTON
HOUSTON PUBLIC WORKS

RECONSTRUCTION & REHABILITATION
COH LIFT STATIONS

LAKE VILLAGE LIFT STATION PROPOSED ELECTRICAL PLATFORM LAYOUT

WBS NUMBER	FOR CITY OF HOUSTON USE ONLY
R-000267-00178-3	
DRAWING SCALE	
AS NOTED	
CITY OF HOUSTON PM	
TAHA LOTIA	
SHEET NO. 117 OF 147	

LV-E-6

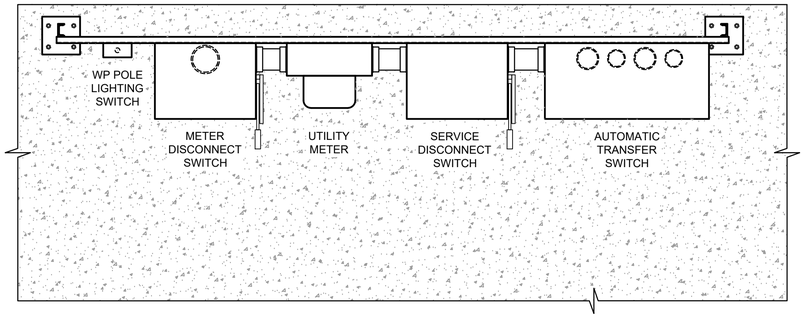

PLAN VIEW

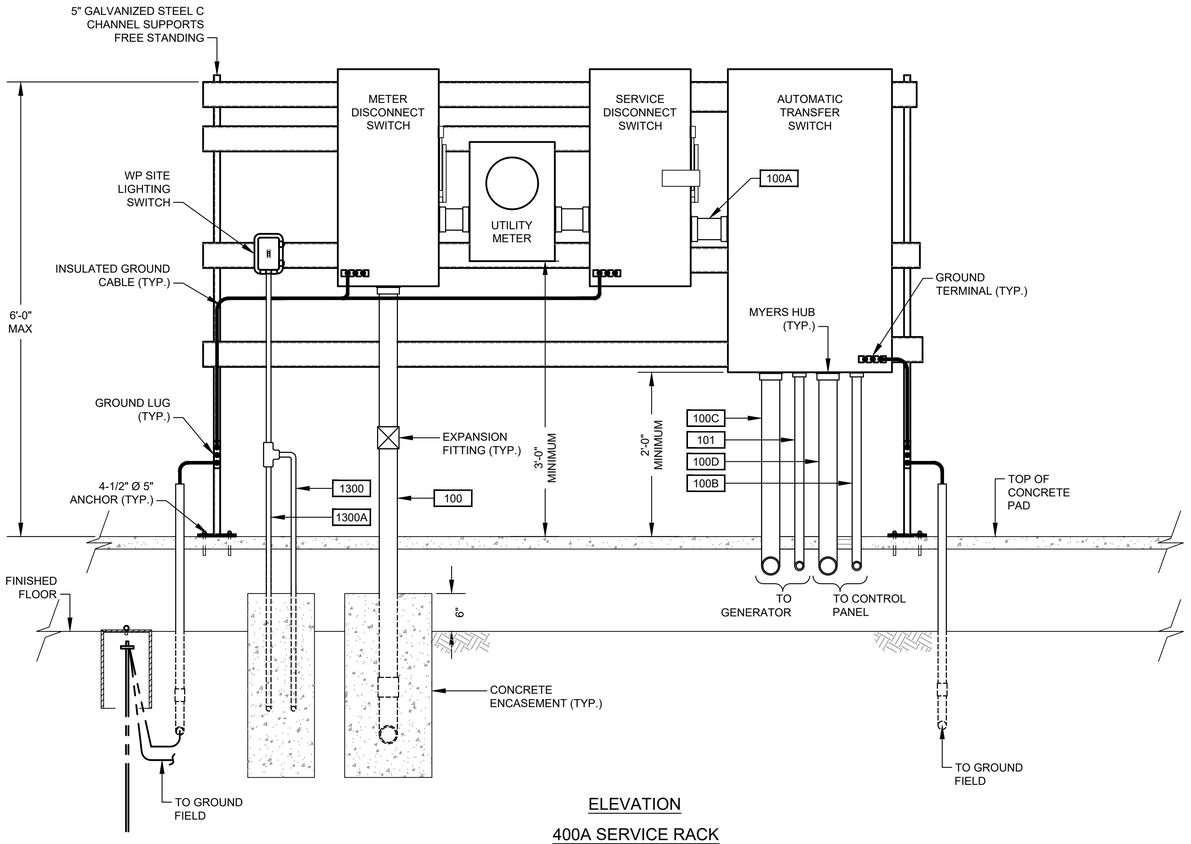

ELEVATION

400A SERVICE RACK

RPS
A TETRA TECH COMPANY
Texas PE Firm Reg. #F-929
575 N. Dairy Ashford, Suite 700,
Houston, Texas 77079
T +1 281 589 7257
E usinfrastructure@rpsgroup.com

FOR INTERIM REVIEW ONLY NOT INTENDED FOR PERMIT, BIDDING OR CONSTRUCTION PURPOSES.
ENGINEER:
HOSS FOROUZAN
P.E. SERIAL NO.77748
09/08/2026

SURVEYED BY:
FB NO. F-4578

CITY OF HOUSTON
HOUSTON PUBLIC WORKS

RECONSTRUCTION & REHABILITATION
COH LIFT STATIONS

LAKE VILLAGE LIFT STATION SERVICE RACK DETAIL

WBS NUMBER	FOR CITY OF HOUSTON USE ONLY
R-000267-00178-3	
DRAWING SCALE	
AS NOTED	
CITY OF HOUSTON PM	
TAHA LOTIA	
SHEET NO. 118 OF 147	

LV-E-7

PLOTTED: 9/8/2026 4:50 PM
FILE PATH: O:\H8109_Lift Station Rehabilitation And Reconstruction (Tetratech)\6 Drawings\Electrical\Working\Package No.1\Lake Village\Lake Village Lift Station Service Rack.dgn

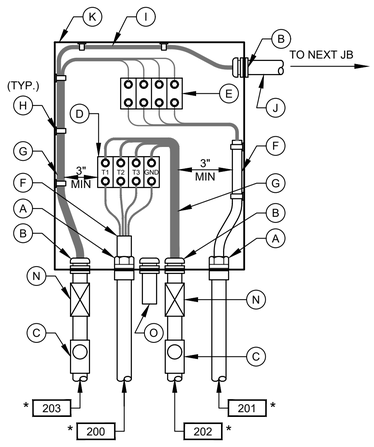

JUNCTION BOX NO.1

DETAIL 2
NTS
(SEE NOTE & 7)

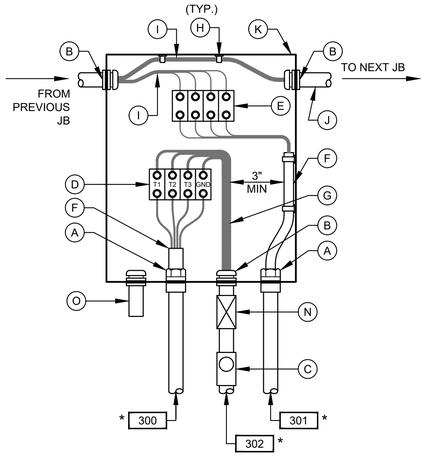

JUNCTION BOX NO.2

DETAIL 3
NTS
(SEE NOTE & 7)

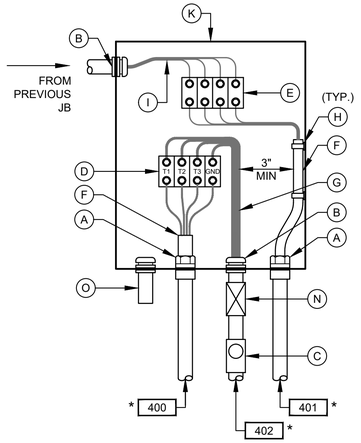

JUNCTION BOX NO.3

DETAIL 4
NTS
(SEE NOTE & 7)

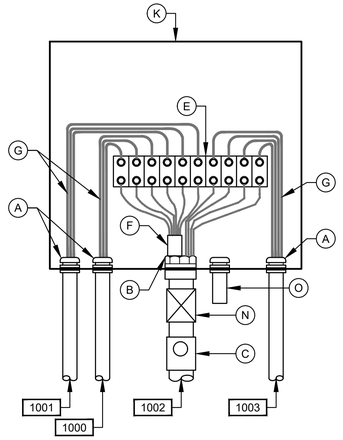

LEVEL TRANSMITTER
JUNCTION BOX

DETAIL 5
NTS
(SEE NOTE & 7)

NOTES:

1. NAMEPLATES SHALL BE MOUNTED TO JUNCTION BOXES USING 316 STAINLESS STEEL HARDWARE.
2. MAINTAIN MINIMUM SEPARATION REQUIRED UNDER NEC ARTICLE 504, BETWEEN INTRINSICALLY SAFE CONTROL WIRING AND NON INTRINSICALLY SAFE MOTOR FEEDER WIRING.
3. UNLESS OTHERWISE NOTED, ALL EXTERIOR EXPOSED CONDUITS SHALL BE PVC COATED ALUMINUM.
4. UNLESS OTHERWISE NOTED, ALL NUTS, BOLTS, SCREWS WASHERS, ETC SHALL BE TYPE 316 STAINLESS STEEL.
5. ALL UNDERGROUND CONDUITS TO BE ENCASED IN REINFORCED CONCRETE DUCTBANK.
6. PROVIDE ANTI-CORROSIVE SPRAY ON ANY BARE METAL PARTS OR EXPOSED WIRE.
7. SEE WIRING SCHEMATICS FOR TERMINALS AND WIRE NUMBERS.
8. ANY CONDUIT REQUIRING A CSBE SEAL, SHALL BE A MINIMUM SIZE OF 2 1/2" PER CABLE.
9. DETAIL SHOWN MAY BE MODIFIED PER SITE SITUATION.
10. COORDINATE WITH WASTE WATER OPERATIONS ELECTRICAL ORGANIZATION FOR THE OPENING OF JUNCTION BOXES TO THE SIDE OF WET WELL IF REQUIRED DURING CONSTRUCTION.
11. THE ENCLOSURES WITH ELECTRICAL CIRCUITS SHALL BE A MINIMUM OF 5 FEET FROM ANY CLASSIFIED AREA, OTHERWISE EXPLOSION PROOF TYPE ENCLOSURES SHALL BE USED.
12. THE RECEPTACLES SHALL BE EXPLOSION PROOF TYPE IF INSTALLED WITHIN 5 FEET OF CLASSIFIED AREA, SHALL BE FIELD VERIFIED.

JUNCTION BOX EQUIPMENT SCHEDULE

- A - OZ GEDNEY CSBE SEAL
- B - WATERTIGHT CONDUIT HUB WITH INSULATED BUSHING
- C - CLASS I, DIV 1, EXPLOSION PROOF SEAL INSTALLED PER NEC DIV 501
- D - POWER TERMINAL BLOCK W/SCREW DOWN BOX LUGS
- E - CONTROL TERM BLOCK W/SCREW DOWN BOX LUGS
- F - MULTI-CONDUCTOR CABLE, REMOVE OUTER JACKET AS SHOWN
- G - WIRING AS SCHEDULED
- H - WIRING HARNESS PERMANENTLY AFFIXED
- I - PUMP CONTROL WIRING FROM PUMPS 2; 2 & 3; 4; OR D2, AS APPLICABLE
- J - 1 1/2" PVC COATED CONDUIT NIPPLE
- K - NEMA 4X STAINLESS STEEL JUNCTION BOX WITH GASKETED FRONT COVER, SINGLE QUARTER TURN, OIL-TIGHT LATCH AND PADLOCKING PROVISIONS, HOFFMAN D-3L16H1206 SS LF OR EQUAL. MINIMUM SIZE: 12"W X 16"H X 6"D
- L - NAMEPLATE, SEE SPECIFICATIONES (SEE NAMEPLATE SCHEDULE)
- M - MOTOR RATED SWITCH
- N - EXPANSION FITTING
- O - DRAIN VENT

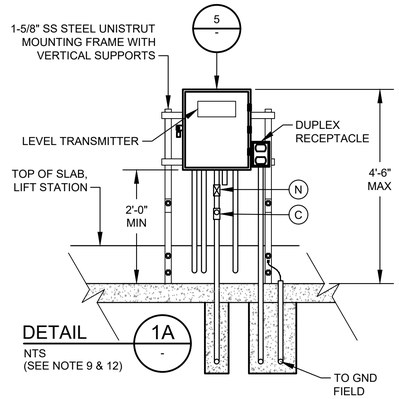

DETAIL 1A
NTS
(SEE NOTE 9 & 12)

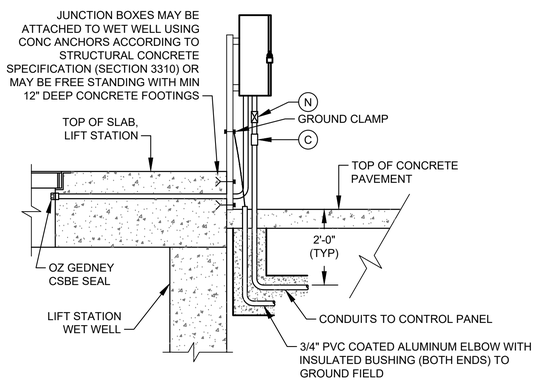

TYP SIDE VIEW FOR DETAIL 1

(SEE NOTE 10)

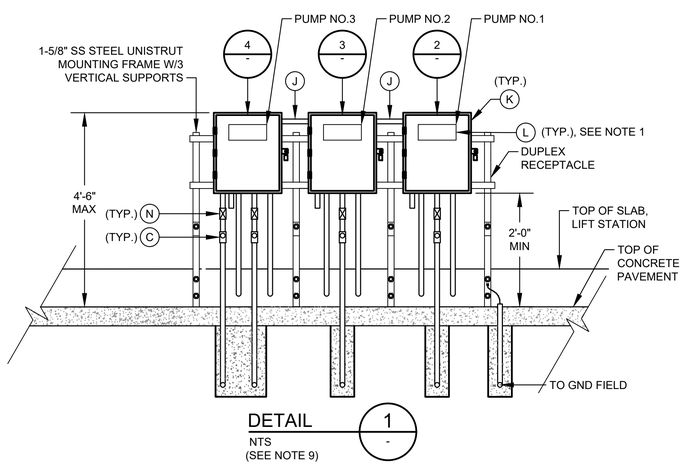

DETAIL 1
NTS
(SEE NOTE 9)

RPS
A TETRA TECH COMPANY
Texas PE Firm Reg. #F-929
575 N. Dairy Ashford, Suite 700, Houston, Texas 77079
T +1 281 589 7257
E usinfrastructure@rpsgroup.com

SURVEYED BY:
FB NO. F-4578

FOR INTERIM REVIEW ONLY NOT INTENDED FOR PERMIT, BIDDING OR CONSTRUCTION PURPOSES.
ENGINEER:
HOSS FOROUZAN
P.E. SERIAL NO.77748
09/08/2026

CITY OF HOUSTON
HOUSTON PUBLIC WORKS

RECONSTRUCTION & REHABILITATION
COH LIFT STATIONS

LAKE VILLAGE LIFT STATION ELECTRICAL JUNCTION BOX DETAIL

WBS NUMBER	FOR CITY OF HOUSTON USE ONLY
R-000267-00178-3	
DRAWING SCALE	
AS NOTED	
CITY OF HOUSTON PM	
TAHA LOTIA	
SHEET NO. 119 OF 147	

LV-E-8

PLOTTED: 9/8/2026 4:50 PM
FILE PATH: O:\H8109_Lift Station Rehabilitation And Reconstruction (Tetratech)\6 Drawings\Electrical\Working\Package No.1\Lake Village\Lake Page\LIFTSTATIONBOX.dgn

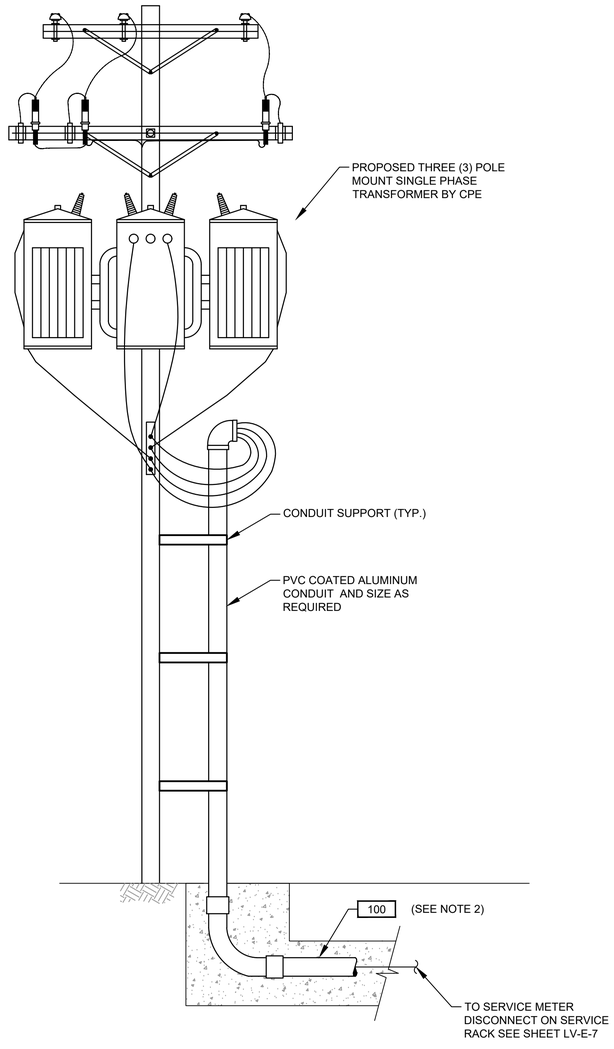

TYPICAL ELECTRICAL SERVICE ENTRANCE

FOR POWER SUPPLY BELOW 500KVA

DETAIL 1 / NTS. -

NOTES:

1. WOODEN POLE 20' LONG. TOP DIAMETER 6", BOTTOM DIAMETER 8" PROVIDED AND INSTALLED BY ELECTRICAL CONTRACTOR.
2. ELECTRICAL SERVICE FEEDER PROVIDED AND INSTALLED BY ELECTRICAL CONTRACTOR. COORDINATE WITH CPE FOR THE REQUIREMENTS OF THE INSTALLATION.

RPS A TETRA TECH COMPANY
Texas PE Firm Reg. #F-929
575 N. Dairy Ashford, Suite 700, Houston, Texas 77079
T +1 281 589 7257
E usinfrastructure@rpsgroup.com

SURVEYED BY:
FB NO. F-4578

FOR INTERIM REVIEW ONLY NOT INTENDED FOR PERMIT, BIDDING OR CONSTRUCTION PURPOSES.
ENGINEER:
HOSS FOROUZAN
P.E. SERIAL NO.77748
09/08/2026

CITY OF HOUSTON
HOUSTON PUBLIC WORKS

RECONSTRUCTION & REHABILITATION
COH LIFT STATIONS

LAKE VILLAGE LIFT STATION ELECTRICAL SERVICE POLE DETAIL

WBS NUMBER	FOR CITY OF HOUSTON USE ONLY
R-000267-00178-3	
DRAWING SCALE	
AS NOTED	
CITY OF HOUSTON PM	
TAHA LOTIA	
SHEET NO. 120 OF 147	

PLOTTED: 9/8/2026 4:50 PM
FILE PATH: O:\H8109_Lift Station Rehabilitation And Reconstruction (Tetratech)\6 Drawings\Electrical\Working\Package No.1\Lake Village\Lake Village LIFT STATION.dgn

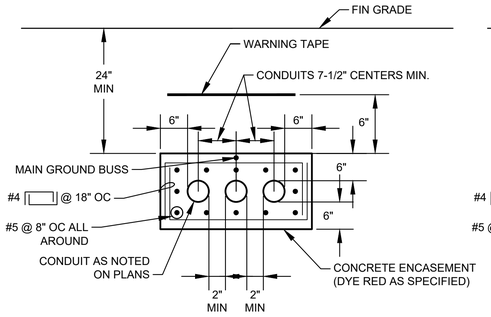

TYP MULTI-CONDUIT DUCTBANK SECTION

NOTE: TIE MAIN GROUNDING BUS TO REBAR AT A MAXIMUM INTERVAL OF EVERY 20 FEET.

DETAIL 1 / - NTS

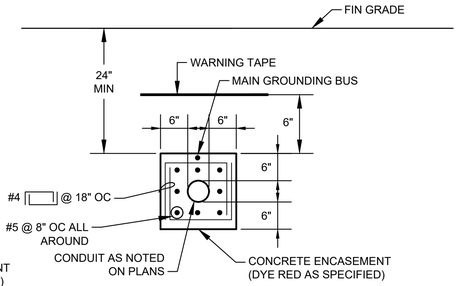

TYP SINGLE-CONDUIT DUCTBANK SECTION

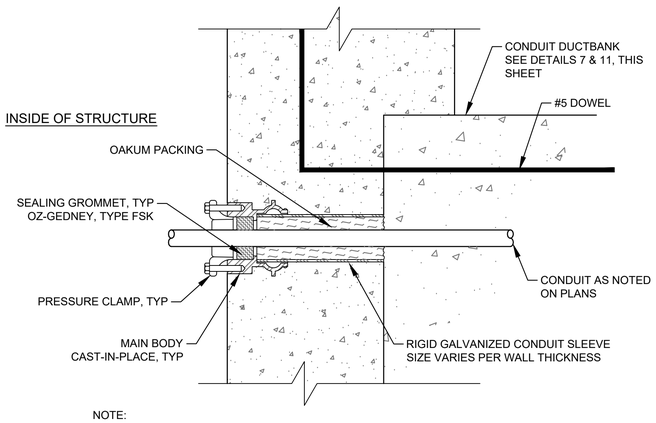

NOTE:

WALL SEAL SHOWN IS TYPICAL FOR EACH CONDUIT IN DUCTBANK.

SINGLE ENDED TYPE

FOR USE WHERE CONDUIT OUTSIDE THE STRUCTURE IS ENCASED IN CONCRETE

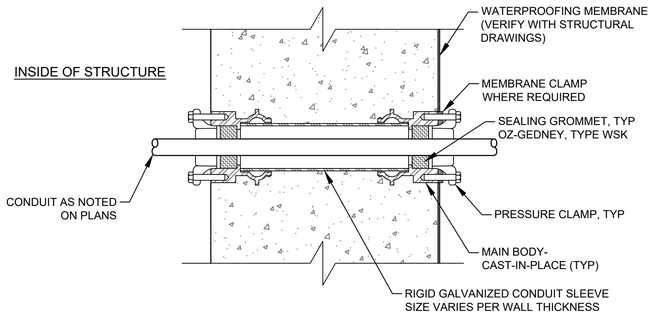

DOUBLE ENDED TYPE WITH MEMBRANE

FOR USE WHERE CONDUIT OUTSIDE THE STRUCTURE IS ENCASED IN CONCRETE

TYPICAL CONDUIT SEALS

DETAIL 4 / - NTS

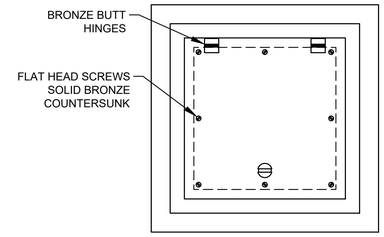

TOP PLAN

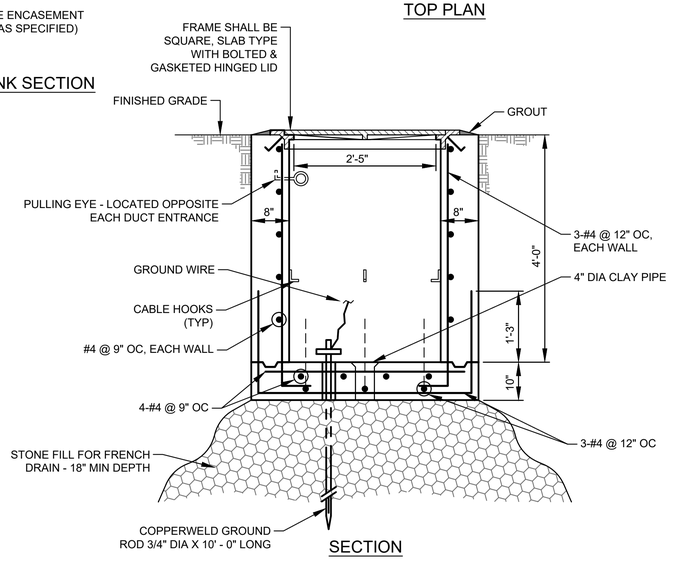

SECTION

TYPICAL ELECTRICAL HANDHOLE CONSTRUCTION

DETAIL 2 / - NTS

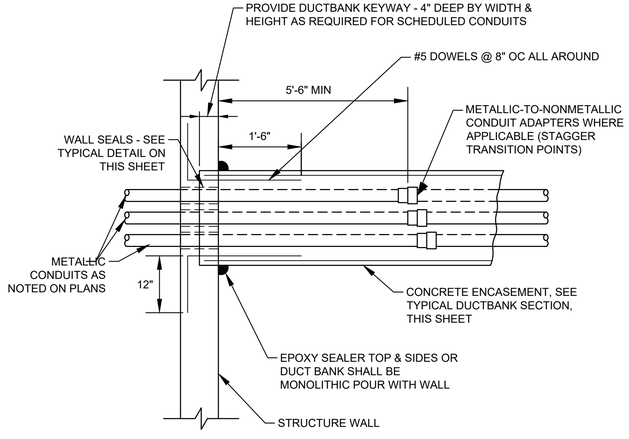

PLAN

TYPICAL DUCTBANK ENTRANCE AT STRUCTURE WALL

DETAIL 5 / - NTS

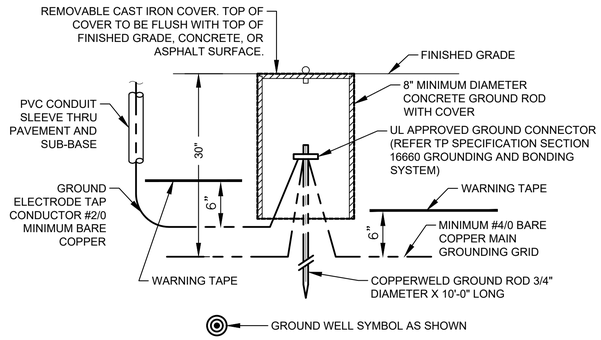

TYPICAL GROUND ROD AND WELL INSTALLATION

DETAIL 3 / - NTS

GROUND CONNECTOR SCHEDULE	
WIRE SIZE	BURNDY
#2 AWG	GAR 6426
#2/0 AWG	GAR 6426
#4/0 AWG	GAR 6429
500 kcmil	GAR 6434

RPS A TETRA TECH COMPANY
Texas PE Firm Reg. #F-929
575 N. Dairy Ashford, Suite 700, Houston, Texas 77079
T +1 281 589 7257
E usinfrastructure@rpsgroup.com

SURVEYED BY:

FB NO. F-4578

FOR INTERIM REVIEW ONLY NOT INTENDED FOR PERMIT, BIDDING OR CONSTRUCTION PURPOSES.
ENGINEER:
HOSS FOROUZAN
P.E. SERIAL NO.77748
09/08/2026

CITY OF HOUSTON
HOUSTON PUBLIC WORKS

RECONSTRUCTION & REHABILITATION
COH LIFT STATIONS

LAKE VILLAGE LIFT STATION ELECTRICAL TYPICAL DETAILS

WBS NUMBER	FOR CITY OF HOUSTON USE ONLY
R-000267-00178-3	
DRAWING SCALE	
AS NOTED	
CITY OF HOUSTON PM	
TAHA LOTIA	
SHEET NO. 121 OF 147	

LV-E-10

FILE PATH: O:\H8109_Lift Station Rehabilitation And Reconstruction (Tetratech)\6 Drawings\Electrical\Working\Package No.1\Lake Village\Lake Village Typical Details.dgn
PLOTTED: 9/8/2026 4:50 PM

FILE PATH: O:\H8109_Lift Station Rehabilitation And Reconstruction (Tetratech)\6 Drawings\Electrical\Working\Package No.1\Lake Village\Lake Village Lift Station 10GW.dgn
PLOTTED: 9/8/2026 4:50 PM

NOTES:

1. ON GROUND WIRE TERMINATION'S, ALL PAINTED OR COATED METAL SURFACES SHALL BE REMOVED AND CLEANED TO BARE METAL. TO OBTAIN A SOUND GROUND CONNECTION. ONCE INSTALLED APPLY PROTECTIVE COATING ON BARE METAL AREAS PER MANUFACTURER REQUIREMENTS.
2. PRECAST CONCRETE POLE TO MOUNT THE RADIO RECEIVER.
3. 1" CONDUIT TO EXTEND TO THE TOP OF POLE FOR ETHERNET CABLE FOR RADIO.

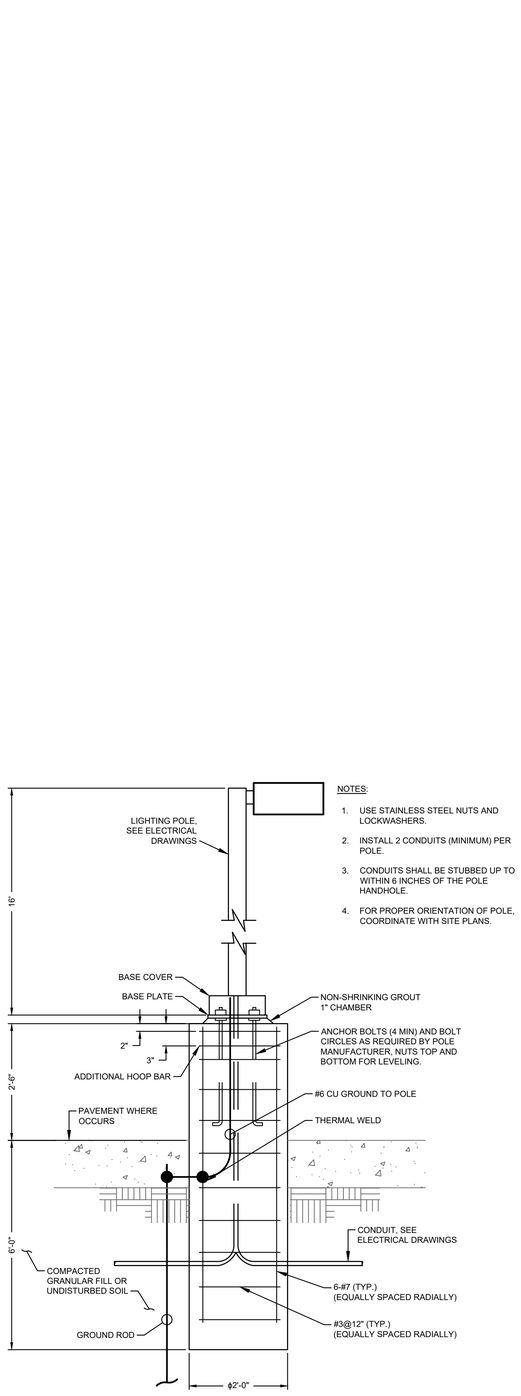

TYPICAL YARD LIGHT

DETAIL 13 / NTS -

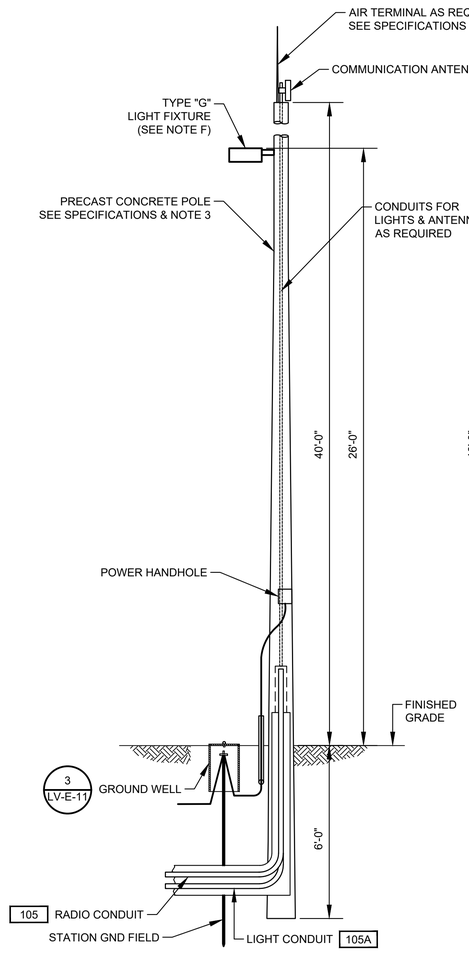

COMMUNICATION POLE MOUNTING DETAIL

DETAIL 2 / NTS -

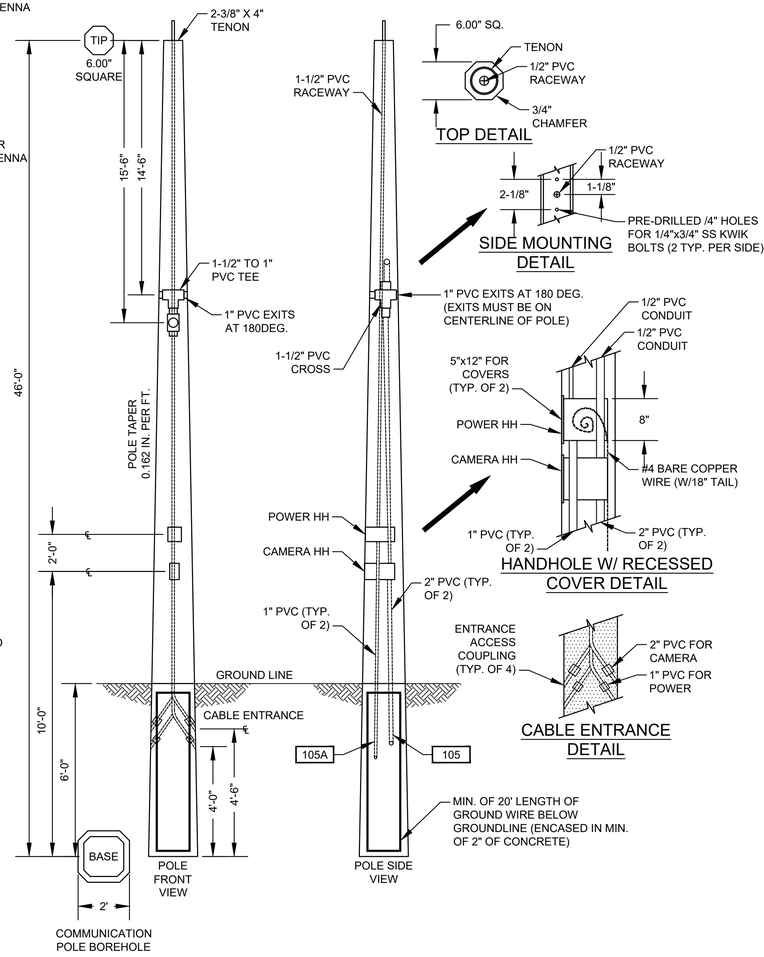

RPS A TETRA TECH COMPANY
Texas PE Firm Reg. #F-929
575 N. Dairy Ashford, Suite 700, Houston, Texas 77079
T +1 281 589 7257
E usinfrastructure@rpsgroup.com

SURVEYED BY:
FB NO. F-4578

FOR INTERIM REVIEW ONLY NOT INTENDED FOR PERMIT, BIDDING OR CONSTRUCTION PURPOSES.
ENGINEER:
HOSS FOROUZAN
P.E. SERIAL NO.77748
09/08/2026

CITY OF HOUSTON
HOUSTON PUBLIC WORKS

RECONSTRUCTION & REHABILITATION
COH LIFT STATIONS

LAKE VILLAGE LIFT STATION ELECTRICAL YARD LIGHT/ COMM. POLE DETAILS

WBS NUMBER	FOR CITY OF HOUSTON USE ONLY
R-000267-00178-3	
DRAWING SCALE	
AS NOTED	
CITY OF HOUSTON PM	
TAHA LOTIA	
SHEET NO. 122 OF 147	

LV-E-11

	DESCRIPTION	SERVICE		ROUTING			CONDUIT & WIRE SIZE
		VOLTAGE	AMPS OR HP	FROM	TO	VIA	
A	MAIN BONDING JUMPER	--	--	MAIN FUSED DISCONNECT NEUTRAL	MAIN FUSED DISCONNECT GROUND	--	#2 CU GND.
B	EQUIPMENT BONDING JUMPER	--	--	MCC/POWER PANEL ENCLOSURE	POWER/CONTROL PANEL & EQUIPMENT	--	#2 CU GND.
C	GROUNDED ELECTRODE CONDUCTOR	--	--	GROUNDING ELECTRODE	MAIN SERVICE FUSED DISCONNECT GROUNDING	--	#2 CU GND.
100	SERVICE ENTRANCE	480V	400A	UTILITY POWER SERVICE	METER DISCONNECT		3#500 MCM, #2 NEUT. #2 CU GND. 3-1/2"C.
100A	SERVICE POWER	480V	400A	SERVICE DISCONNECT	ATS	--	3#500 MCM, #2 NEUT. #2 CU GND. 3-1/2"C.
100B	NORMAL/EMERGENCY POWER	24VDC	--	ATS	CONTROL PANEL	--	4#14 AWG, 1"C.
100C	EMERGENCY POWER	480V	400A	ATS	GENERATOR	--	3#500 MCM, #2 NEUT. #2 CU GND. 3-1/2"C.
100D	ELECTRIC POWER	480V	400A	ATS	CONTROL PANEL	--	3#500 MCM, #2 NEUT. #2 CU GND. 3-1/2"C.
101	GENERATOR CONTROL	120V	--	ATS	GENERATOR	--	6#14, #14 GND. 1"C.
102	ANNUNCIATION	--	--	GENERATOR	CONTROL PANEL	--	MANUFACTURER'S CABLE IN 2"C
103	GENERATOR AUX. POWER	208/120V	--	GENERATOR	LIGHTING PANEL	--	3#4 AWG, #6 GND. 1-1/2"C.
105	COMMUNICATION	--	--	COMMUNICATION POLE	PPU-AC	--	CAT-6A POE CABLE IN 1"C.
200	PUMP NO. 1 POWER	480V	84 HP	PUMP NO. 1	PUMP NO. 1 JUNCTION BOX	--	MANUFACTURER'S CABLE IN 2-1/2"C.
201	PUMP NO. 1 CONTROLS	120V	--	PUMP NO. 1	PUMP NO.1 JUNCTION BOX	--	MANUFACTURER'S CABLE IN 2-1/2"C.
202	PUMP NO. 1 POWER	480V	84 HP	PUMP NO.1 JUNCTION BOX	PUMP STARTER	--	3#1/0 MCM, 4# CU GND., 2"C.
203	COMBINED PUMP CONTROLS	120V	--	PUMP NO. 1 JUNCTION BOX	PUMP STARTER	COMBINE PUMP 1 & 2 CONTROLS	COMBINE 200 & 300 TAG WIRING, 12#14, 1"C.
300	PUMP NO. 2 POWER	480V	84 HP	PUMP NO. 2	PUMP NO. 2 JUNCTION BOX	--	MANUFACTURER'S CABLE IN 2-1/2"C.
301	PUMP NO. 2 CONTROLS	120V	--	PUMP NO. 2	PUMP NO.2 JUNCTION BOX	--	MANUFACTURER'S CABLE IN 2-1/2"C.
302	PUMP NO. 2 POWER	480V	84 HP	PUMP NO.2 JUNCTION BOX	PUMP STARTER	--	3#1/0 MCM, 4# CU GND., 2"C.
400	PUMP NO. 3 POWER	480V	84 HP	PUMP NO. 3	PUMP NO.3 JUNCTION BOX	--	MANUFACTURER'S CABLE IN 2-1/2"C.
401	PUMP NO. 3 CONTROLS	120V	--	PUMP NO. 3	PUMP NO.3 JUNCTION BOX	--	MANUFACTURER'S CABLE IN 2-1/2"C.
402	PUMP NO. 3 POWER	480V	84 HP	PUMP NO.3 JUNCTION BOX	PUMP STARTER	--	3#1/0 MCM, 4# CU GND., 2"C.
500	LIGHTING TRANSFORMER PRIMARY FEEDER	480V	70A	CONTROL PANEL	LIGHTING TRANSFORMER PRIMARY	--	2#4, #4 GND., 1"C.
501	LIGHTING TRANSFORMER SECONDARY FEEDER	120/240V	125A	LIGHTING TRANSFORMER SECONDARY	LIGHTING PANEL	--	3#1 AWG, #6 GND. 1-1/2"C.
502	LIGHTING TRANSFORMER GROUND	120/240V	--	LIGHTING TRANSFORMER	GROUND FIELD	--	#8 GND. 1"C.
1000	LEVEL TRANSMITTER	24VDC	--	LEVEL TRANSMITTER LT-1	TRANSMITTER JUNCTION BOX	--	MANUFACTURER'S CABLE IN 2-1/2" CONDUIT
1001	LEVEL TRANSMITTER	24VDC	--	LEVEL TRANSMITTER LT-2	TRANSMITTER JUNCTION BOX	--	MANUFACTURER'S CABLE IN 2-1/2" CONDUIT
1002	COMBINED LEVEL TRANSMITTERS & FLOAT SWITCH	24VDC	--	CONTROL PANEL	TRANSMITTER JUNCTION BOX	--	2 TRIAD #16, 4#14 AWG, 1"C.
1003	WELL FLOAT SWITCHES	120V	--	TRANSMITTER JUNCTION BOX	FLOAT SWITCH NO.1 THROUGH NO.7	--	MANUFACTURER'S CABLE IN 2-1/2"C
1100	120VAC FOR RECEPTACLE	120V	--	LIGHTING PANEL	RECEPTACLE ON SERVICE RACK	--	2#12 AWG, #12 GND, 3/4"C.
1300	SITE LIGHTING	120V	--	SITE LIGHTING SWITCH	SITE LIGHTING	--	2#12 AWG, #12 GND. 1"C.
1300A	SITE LIGHTING	120V	--	LIGHTING PANEL	SITE LIGHTING SWITCH	--	2#12 AWG, #12 GND. 1"C.

NOTES BY SYMBOL "⟨#⟩":

⟨1⟩ REFER TO SPEC SECTION 16120 FOR CONDUCTOR COLOR CODE.

LV-E-12

RPS A TETRA TECH COMPANY
Texas PE Firm Reg. #F-929
575 N. Dairy Ashford, Suite 700,
Houston, Texas 77079
T +1 281 589 7257
E usinfrastructure@rpsgroup.com

FOR INTERIM REVIEW ONLY NOT INTENDED FOR PERMIT, BIDDING OR CONSTRUCTION PURPOSES.
ENGINEER:
HOSS FOROUZAN
P.E. SERIAL NO.77748
09/08/2026

SURVEYED BY:
FB NO. F-4578

CITY OF HOUSTON
HOUSTON PUBLIC WORKS

RECONSTRUCTION & REHABILITATION
COH LIFT STATIONS

LAKE VILLAGE LIFT STATION CONDUIT SCHEDULE

WBS NUMBER	FOR CITY OF HOUSTON USE ONLY
R-000267-00178-3	
DRAWING SCALE	
AS NOTED	
CITY OF HOUSTON PM	
TAHA LOTIA	
SHEET NO. 123 OF 147	

PLOTTED: 9/8/2026 4:50 PM
FILE PATH: O:\H8109_Lift Station Rehabilitation And Reconstruction (Tetratech)\6 Drawings\Electrical\Working\Package No.1\Lake Village\Lake Village LIFT STATION CONDUIT SCHEDULE.dwg

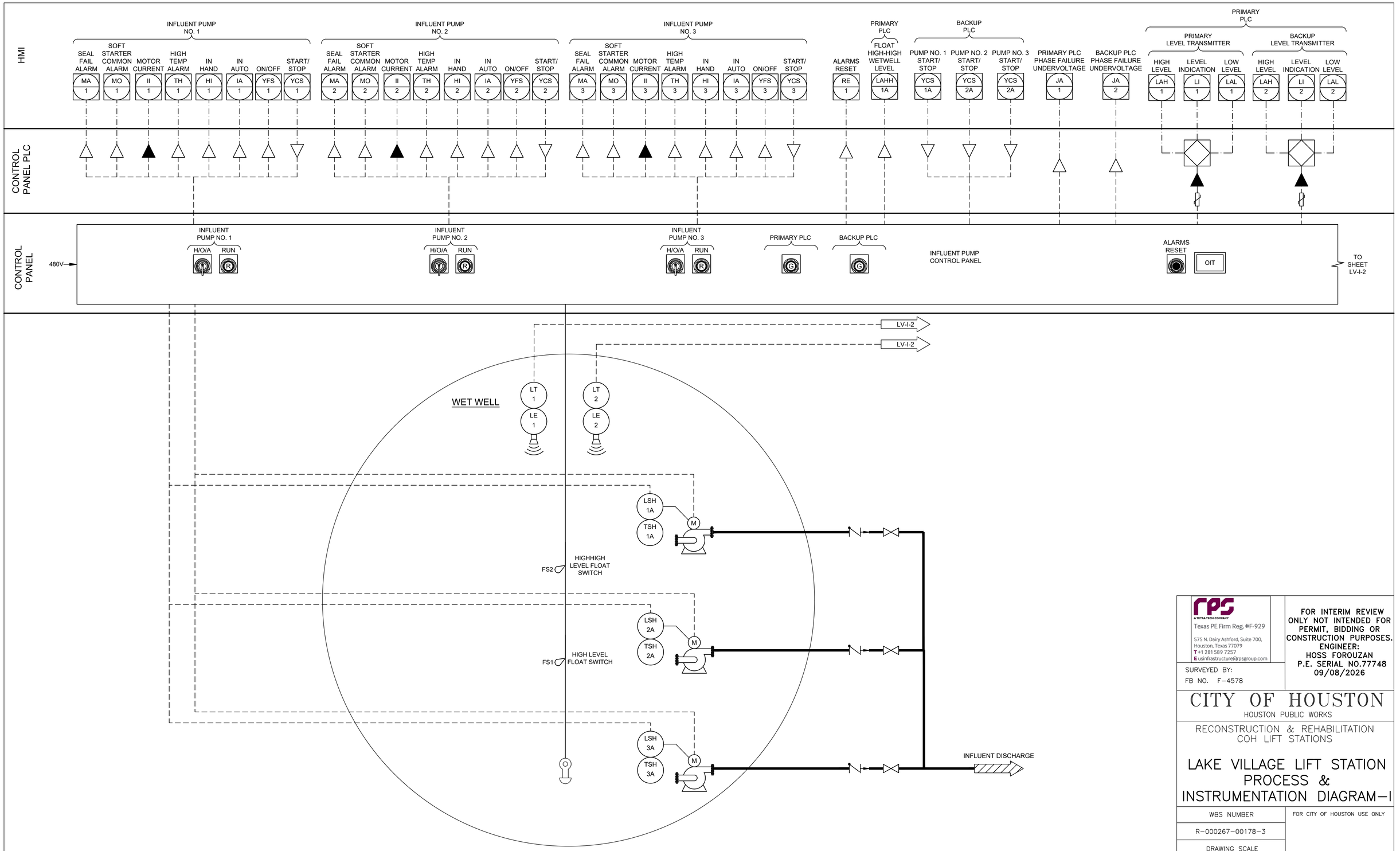

FILE PATH: O:\H8109_Lift Station Rehabilitation And Reconstruction (Tetratech)\6 Drawings\Instrumentation And Control\Working\Package No.1\LAKE VILLAGE\LAKE VILLAGE-I-01.dwg PLOTTED: 9/8/2026 4:52 PM

rps
A TETRA TECH COMPANY
Texas PE Firm Reg. #F-929
575 N. Dairy Ashford, Suite 700,
Houston, Texas 77079
T +1 281 589 7257
E usinfrastructure@rpsgroup.com

FOR INTERIM REVIEW ONLY NOT INTENDED FOR PERMIT, BIDDING OR CONSTRUCTION PURPOSES.
ENGINEER:
HOSS FOROUZAN
P.E. SERIAL NO.77748
09/08/2026

SURVEYED BY:
FB NO. F-4578

CITY OF HOUSTON

HOUSTON PUBLIC WORKS

RECONSTRUCTION & REHABILITATION
COH LIFT STATIONS

LAKE VILLAGE LIFT STATION PROCESS & INSTRUMENTATION DIAGRAM-I

WBS NUMBER	FOR CITY OF HOUSTON USE ONLY
R-000267-00178-3	
DRAWING SCALE	
AS NOTED	
CITY OF HOUSTON PM	
TAHA LOTIA	
SHEET NO. 124 OF 147	

LV-I-1

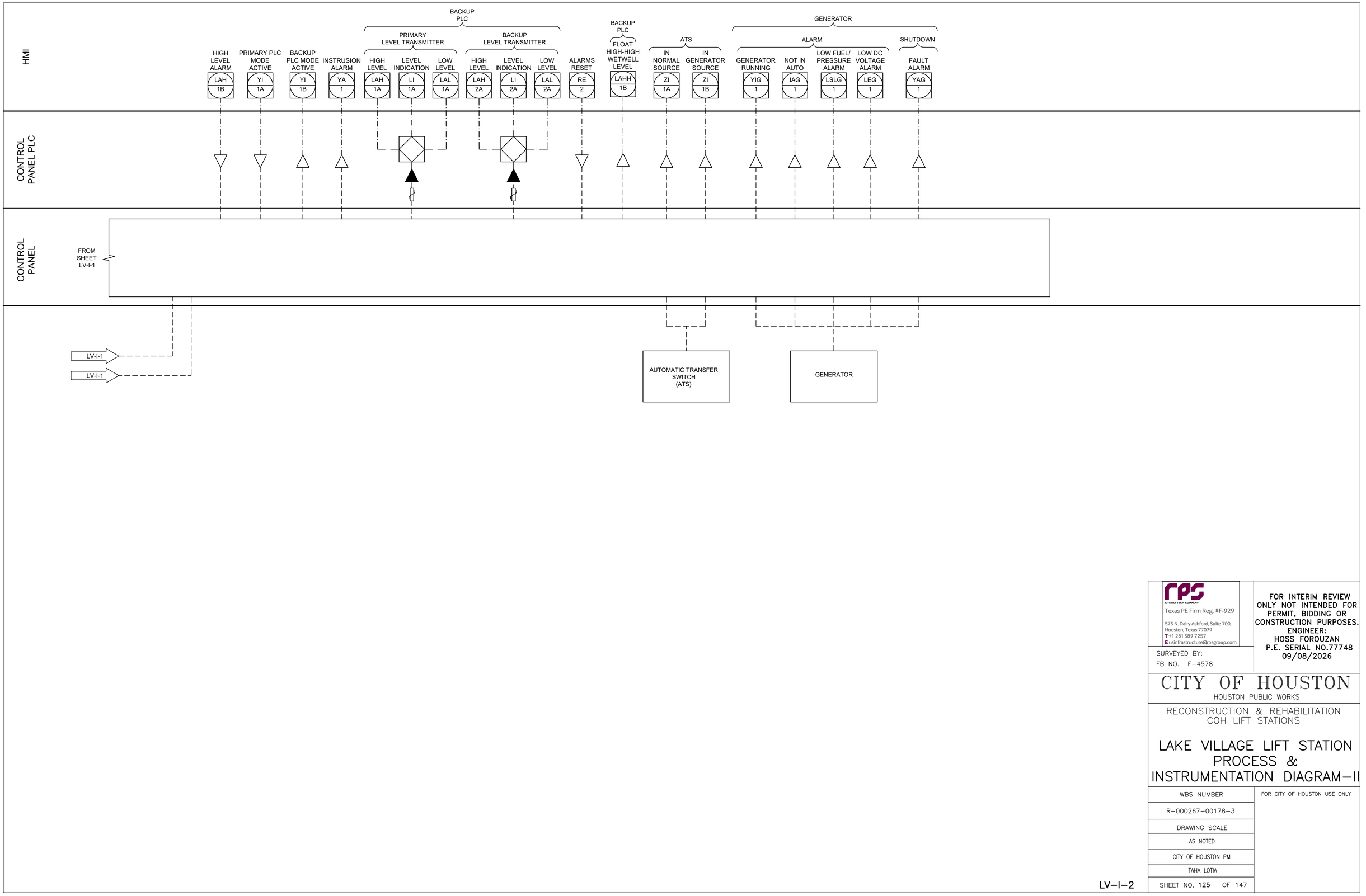

RPS
A TETRA TECH COMPANY
Texas PE Firm Reg. #F-929
575 N. Dairy Ashford, Suite 700,
Houston, Texas 77079
T +1 281 589 7257
E usinfrastructure@rpsgroup.com

SURVEYED BY:
FB NO. F-4578

FOR INTERIM REVIEW ONLY NOT INTENDED FOR PERMIT, BIDDING OR CONSTRUCTION PURPOSES.
ENGINEER:
HOSS FOROUZAN
P.E. SERIAL NO.77748
09/08/2026

CITY OF HOUSTON
HOUSTON PUBLIC WORKS

RECONSTRUCTION & REHABILITATION
COH LIFT STATIONS

LAKE VILLAGE LIFT STATION PROCESS & INSTRUMENTATION DIAGRAM–II

WBS NUMBER	FOR CITY OF HOUSTON USE ONLY
R-000267-00178-3	
DRAWING SCALE	
AS NOTED	
CITY OF HOUSTON PM	
TAHA LOTIA	
SHEET NO. 125 OF 147	

LV–I–2

FILE PATH: O:\H8109_Lift Station Rehabilitation And Reconstruction (Tetratech)\6 Drawings\Instrumentation And Control\Working\Package No.1\Lake Village–I–02.dwg PLOTTED: 9/8/2026 4:52 PM

NOTES:

1. FOR DESCRIPTION AND RATINGS OF ITEMS INDICATED WITH ITEM TAG, SEE DEVICE RATINGS SCHEDULE.
2. REFER TO SPEC SECTION 16120 FOR CONDUCTOR COLOR CODE.
3. THE PLC POWER SUPPLY SHALL FEED THE 24VDC I/O.
4. CAT6 ETHERNET CABLE FOR MERAKI CELLULAR ROUTER (P1).
5. CAT6A POE CABLE TO RADIO.
6. COMMUNICATION PPU-AC & SCADA SHALL BE PROVIDED BY CONTRACTOR INCLUDING TO RUN CONDUITS & WIRES.
7. COORDINATE WITH VENDOR TO PROVIDE PROPER VENTILATION WHERE APPLICABLE.

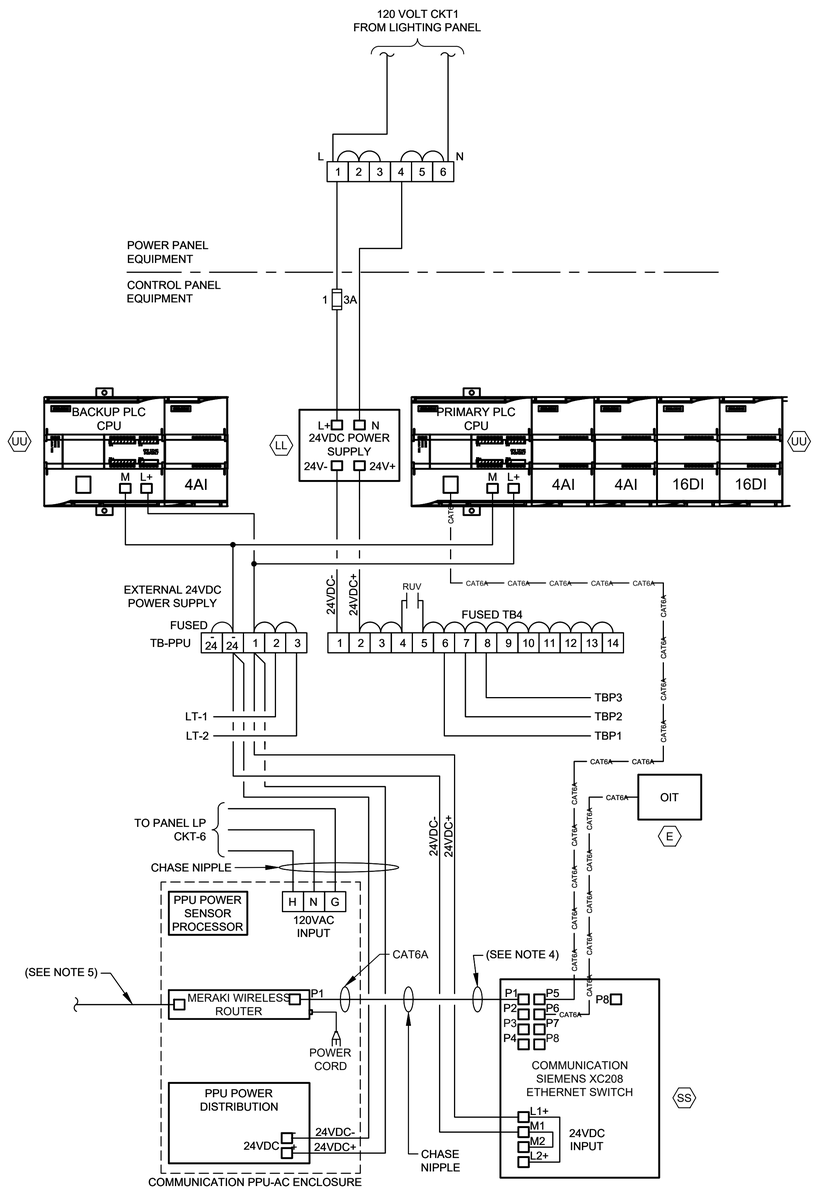

CONTROL POWER &
COMMUNICATIONS WIRING

DIAGRAM

NTS

(SEE NOTE 2 & 6)

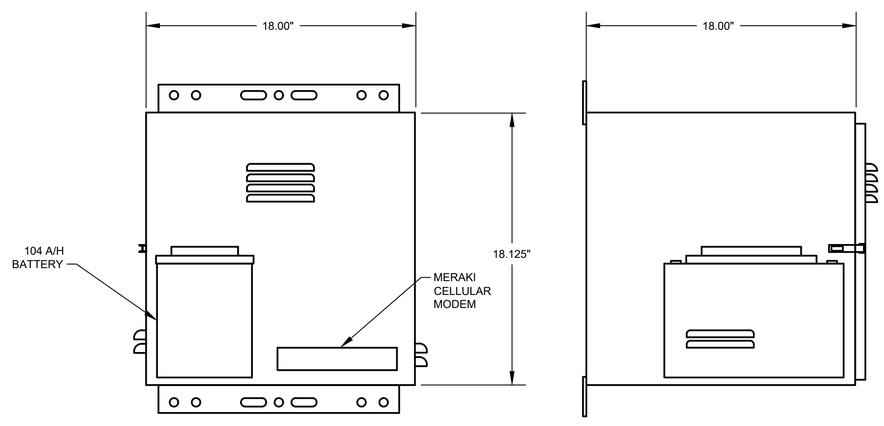

PPU-AC ENCLOSURE
FRONT VIEW

PPU-AC ENCLOSURE
SIDE VIEW

PPU-AC
CONTROL ENCLOSURE

ELEVATION

NTS

(SEE NOTE 7)

rps
A TETRA TECH COMPANY
Texas PE Firm Reg. #F-929
575 N. Dairy Ashford, Suite 700,
Houston, Texas 77079
T +1 281 589 7257
E usinfrastructure@rpsgroup.com

FOR INTERIM REVIEW ONLY NOT INTENDED FOR PERMIT, BIDDING OR CONSTRUCTION PURPOSES.
ENGINEER:
HOSS FOROUZAN
P.E. SERIAL NO.77748
09/08/2026

SURVEYED BY:
FB NO. F-4578

CITY OF HOUSTON
HOUSTON PUBLIC WORKS

RECONSTRUCTION & REHABILITATION
COH LIFT STATIONS

LAKE VILLAGE LIFT STATION
COMMUNICATION DIAGRAM

WBS NUMBER	FOR CITY OF HOUSTON USE ONLY
R-000267-00178-3	
DRAWING SCALE	
AS NOTED	
CITY OF HOUSTON PM	
TAHA LOTIA	
SHEET NO. 126 OF 147	

LV-I-3

FILE PATH: O:\H8109_Lift Station Rehabilitation And Reconstruction (Tetratech)\6 Drawings\Instrumentation And Control\!Working\Package No.1\PLOT SHEETS\Lake Village-I-03.dwg PLOTTED: 9/8/2026 4:52 PM

EQUIPMENT AND DEVICE SCHEDULE		
ITEM	QUANTITY	DESCRIPTION
A	1	PANEL BOARD, 120/240V, 1 PHASE, 3 WIRE, 100A, 12 CKTS
B	6	FULL VOLTAGE, NON-REVERSING, SINGLE SPEED, AUTOMATIC MOTOR STARTER W/120 VOLT CONTROL COIL, NEMA SIZE AS SCHEDULED.
C	3	TIME DELAY RELAY WITH THREE FORM C CONTACTS, 120VAC COIL AND 11 PIN SOCKET BASE.
D	1	SINGLE CHANNEL INTRINSICALLY SAFE RELAY
E	1	PROGRAMMING SCREEN (OIT)
F	3	HAND-OFF-AUTO SWITCH, 3 POSITION, HEAVY-DUTY, OILTIGHT WITH 2 SETS OF CONTACT BLOCKS (PUMP CONTROL)
G	3	INDICATING LIGHT, HEAVY DUTY, OILTIGHT, RED, 24 VDC, LED, WITH "RUN" LEGEND
H	1	PERPETUAL POWER UNIT (PPU)
I	1	PUMP ALARM RESET PUSHBUTTON
J	2	SWITCH FOR CABINET LIGHT, 120V, 20A, SPST
K	3	DUPLEX RECEPTACLE, 120V, 20A, 2 WIRE, GROUNDED
L	2	24" LED STRIP LIGHT 120V SUITABLE FOR ZERO DEGREE OPERATION.
M	1	SURGE PROTECTOR - INCOMING POWER
N	*	NOT USED.
P	3	CURRENT TRANSFORMER, RATIO AS SCHEDULED W/4-20mA OUTPUT.
Q	6	POWER BLOCKS, SIZED FOR MOTOR POWER REQUIREMENTS
R	*	RELAY WITH THREE FORM C CONTACTS, AND 11 PIN SOCKET BASE
S	*	NOT USED.
T	*	NAMEPLATES, SEE SPECIFICATIONS (SEE NAMEPLATE SCHEDULE)
U	-	NOT USED
V	6	FUSE HOLDER & FUSES - PHASE FAILURE
W	1	NEMA 3R GASKETED ALUMINUM ENCLOSURE WITHOUT VENTS 72"H x 60"W x 36"D
X	1	DOOR MOUNTED ROTARY HANDLE DISCONNECT SWITCH (SUITABLE FOR ENVIRONMENT)
Y	1	THERMAL-MAGNETIC MOLDED CASE MAIN CIRCUIT BREAKER, SIZE AS SCHEDULED
Z	2	ADJUSTABLE INSTANTENOUS TRIP MOTOR CIRCUIT PROTECTOR, SIZE AS SCHEDULED
AA	*	TERMINAL BLOCKS
BB	3	SOFT STARTER EXTERNAL KEYPAD
CC	3	ANALOG I/O SURGE SUPPRESSOR
DD	1	WIRE DUCT 2" WIDE x 2" DEEP MINIMUM
EE	1	THERMAL-MAGNETIC MODLED CASE CIRCUIT BREAKER FOR LIGHTING TRANSFORMER, SIZE AS SCHEDULED
FF	1	GROUND BUS
GG	1	25 KVA, 480 - 240/120V,1ϕ, 3W DRY TYPE NEMA 3R ENCLOSURE TRANSFORMER (PAD MOUNTED)
HH	*	NOT USED.
II	1	120VAC - 24VAC POWER SUPPLY (AS REQUIRED)
JJ	11	CARTRIDGE FUSES & FUSE HOLDER
KK	8	QUARTER TURN CAPTIVE DOOR CLOSURE
LL	1	120VAC - 24VDC PLC POWER SUPPLY 5A
MM	2	MOTION SWITCH
NN	*	NOT USED
PP	2	INDICATING LED LIGHT, HEAVY DUTY, OILTIGHT, GREEN, 24 VDC, LED WITH " PRIMARY PLC" & "BACKUP PLC" LEGEND
QQ	3	3 PHASE, 480VAC, SOFT STARTER
RR	*	NOT USED
SS	1	COMMUNICATION ETHERNET SWITCH
TT	1	POWER SURGE PROTECTOR - CONTROL POWER
UU	3	PROGRAMMABLE LOGIC CONTROLLER WITH EXPANSION UNIT
VV	1	PHASE AND UNDER VOLTAGE MONITOR
WW	*	FUSED TERMINAL BLOCKS
XX	3	PUMP PROTECTION MODULE RATED FOR CLASS I, DIVISION I
YY	2	ANALOG SIGNAL ISOLATOR
ZZ	3	POWER FACTOR CORRECTION CAPACITOR
AB	-	NOT USED.
AC	1	POWER DISTRIBUTION BLOCK
AD	1	NEUTRAL LUG
AE	1	6" EXHAUST FAN, 120V, STAINLESS FILTERS & GRILL PACKAGE W/BUG GUARD
AF	1	T-STAT FOR EXHAUST FAN

* - AS SCHEDULED

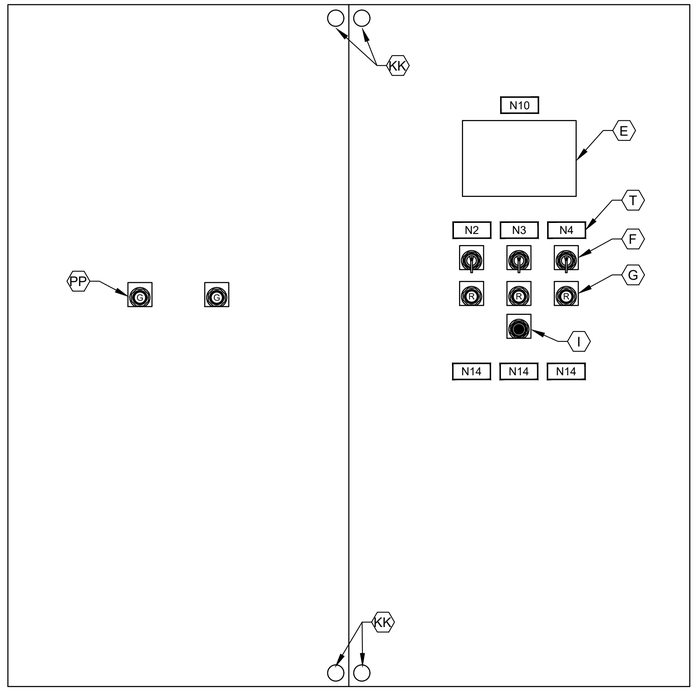

CONTROL PANEL FRONT INNER DOOR

ELEVATION

NTS

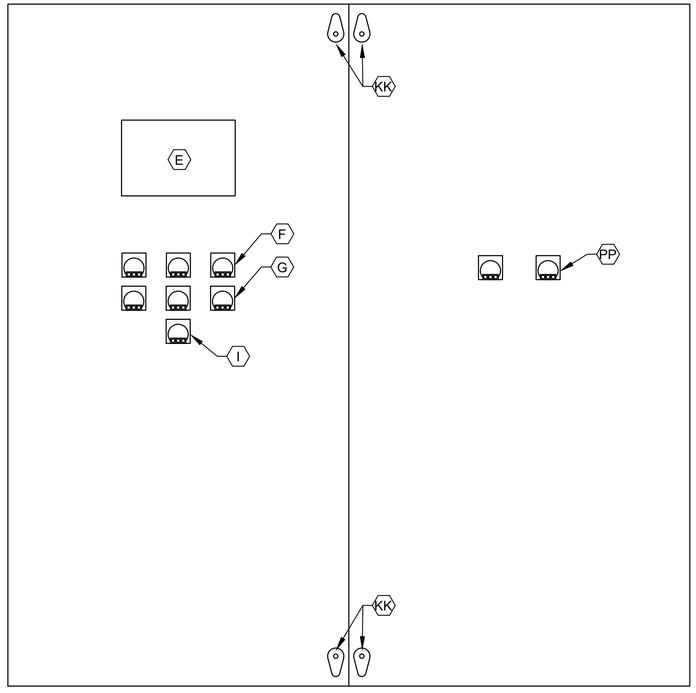

CONTROL PANEL BACK INNER DOOR

ELEVATION

NTS

NOTES:

1. NAMEPLATES SHALL BE MOUNTED TO PANELS USING STAINLESS STEEL HARDWARE.
2. REFER SPECIFICATIONS FOR ALL PANEL COMPONENTS.

RPS A TETRA TECH COMPANY
Texas PE Firm Reg. #F-929
575 N. Dairy Ashford, Suite 700, Houston, Texas 77079
T +1 281 589 7257
E usinfrastructure@rpsgroup.com

FOR INTERIM REVIEW ONLY NOT INTENDED FOR PERMIT, BIDDING OR CONSTRUCTION PURPOSES.
ENGINEER:
HOSS FOROUZAN
P.E. SERIAL NO.77748
09/08/2026

SURVEYED BY:
FB NO. F-4578

CITY OF HOUSTON
HOUSTON PUBLIC WORKS

RECONSTRUCTION & REHABILITATION
COH LIFT STATIONS

LAKE VILLAGE LIFT STATION CONTROL CABINET EQUIPMENT LAYOUT & SCHEDULE

WBS NUMBER	FOR CITY OF HOUSTON USE ONLY
R-000267-00178-3	
DRAWING SCALE	
AS NOTED	
CITY OF HOUSTON PM	
TAHA LOTIA	
SHEET NO. 127 OF 147	

LV-I-4

FILE PATH: O:\H8109_Lift Station Rehabilitation And Reconstruction (Tetratech)\6 Drawings\Instrumentation And Control\Working\Package No.1\LV_Lake Village_Lake Village-I-04.dwg PLOTTED: 9/8/2026 4:52 PM

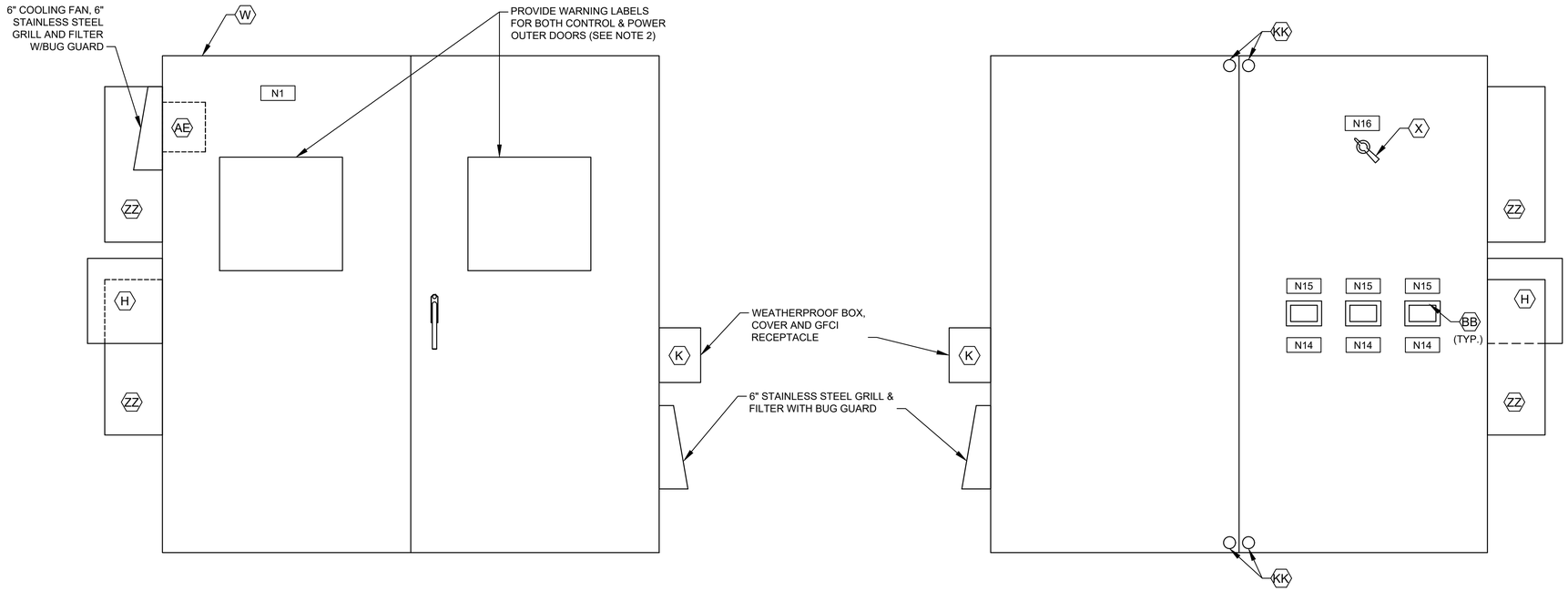

CONTROL CABINET (CONTROL SIDE)
OUTER DOOR

ELEVATION

NTS

CONTROL CABINET (POWER SIDE)
INNER DOOR

ELEVATION

NTS
(SEE NOTE 1)

NOTES:

1. SEE SHEET LV-I-4 FOR EQUIPMENT SCHEDULE.
2. REFER TO NEC SECTIONS 110.16 & 110.21

NAMEPLATE SCHEDULE

DESIGNATION	ENGRAVED	DESIGNATION	ENGRAVED
N1	PUMP STATION DESIGNATION	N8	NOT USED.
N2	PUMP NO. 1	N9	NOT USED.
N3	PUMP NO. 2	N10	PROGRAMMING SCREEN
N4	PUMP NO. 3	N11	NOT USED.
N5	NOT USED.	N12	PRIMARY PLC
N6	NOT USED.	N13	BACKUP PLC
N7	NOT USED.	N14	MOTOR DATA
			HORSEPOWER (OUTPUT) ----------
			RPM AT FULL LOAD ----------
			TIME RATING ----------
			FREQUENCY ----------
			NUMBER OF PHASES ----------
			MODEL NUMBER ----------
			RATED VOLTAGE ----------
			SERVICE FACTOR ----------
			FULL LOAD AMPS ----------
			INSULATION CLAS ----------
			NEMA DESIGN LETTER ----------
			TEMPERATURE RISE ----------
			NEMA FRAME SIZE ----------
			DATE OF MANUFACTURE ----------
			THERMO PROTECTION (IF REQUIRED) --
			MOISTURE PROTECTION (IF REQUIRED)-
		N15	SOFT STARTER KEYPAD
		N16	MAIN BREAKER

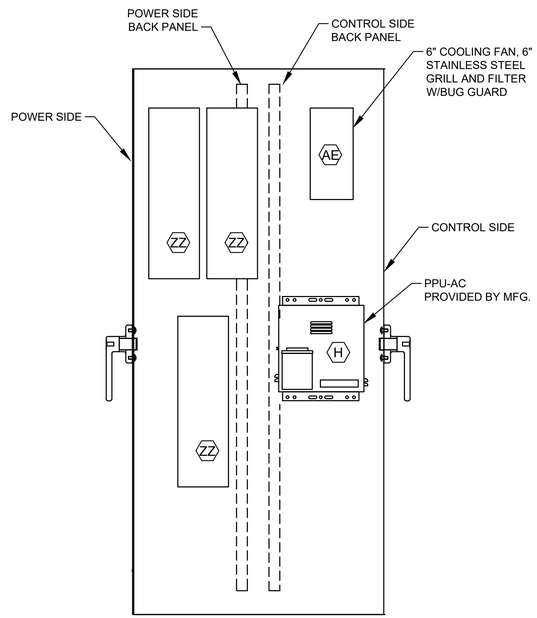

CONTROL CABINET (LEFT SIDE VIEW)

ELEVATION

NTS

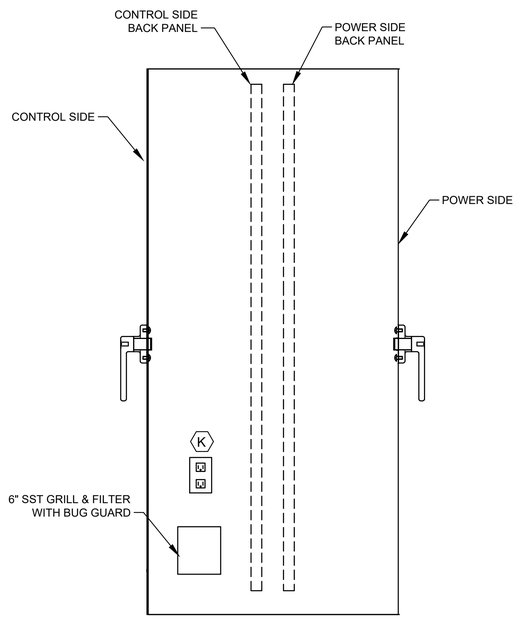

CONTROL CABINET (RIGHT SIDE VIEW)

ELEVATION

NTS

RPS A TETRA TECH COMPANY
Texas PE Firm Reg. #F-929
575 N. Dairy Ashford, Suite 700, Houston, Texas 77079
T +1 281 589 7257
E usinfrastructure@rpsgroup.com

SURVEYED BY:
FB NO. F-4578

FOR INTERIM REVIEW ONLY NOT INTENDED FOR PERMIT, BIDDING OR CONSTRUCTION PURPOSES.
ENGINEER:
HOSS FOROUZAN
P.E. SERIAL NO.77748
09/08/2026

CITY OF HOUSTON
HOUSTON PUBLIC WORKS

RECONSTRUCTION & REHABILITATION
COH LIFT STATIONS

LAKE VILLAGE LIFT STATION CONTROL CABINET EQUIPMENT LAYOUT-I

WBS NUMBER	FOR CITY OF HOUSTON USE ONLY
R-000267-00178-3	
DRAWING SCALE	
AS NOTED	
CITY OF HOUSTON PM	
TAHA LOTIA	
SHEET NO. 128 OF 147	

LV-I-5

FILE PATH: O:\H8109_Lift Station Rehabilitation And Reconstruction (Tetratech)\6 Drawings\Instrumentation And Control\Working\Package No.1\LV-I-05 Lake Village.dwg PLOTTED: 9/8/2026 4:52 PM

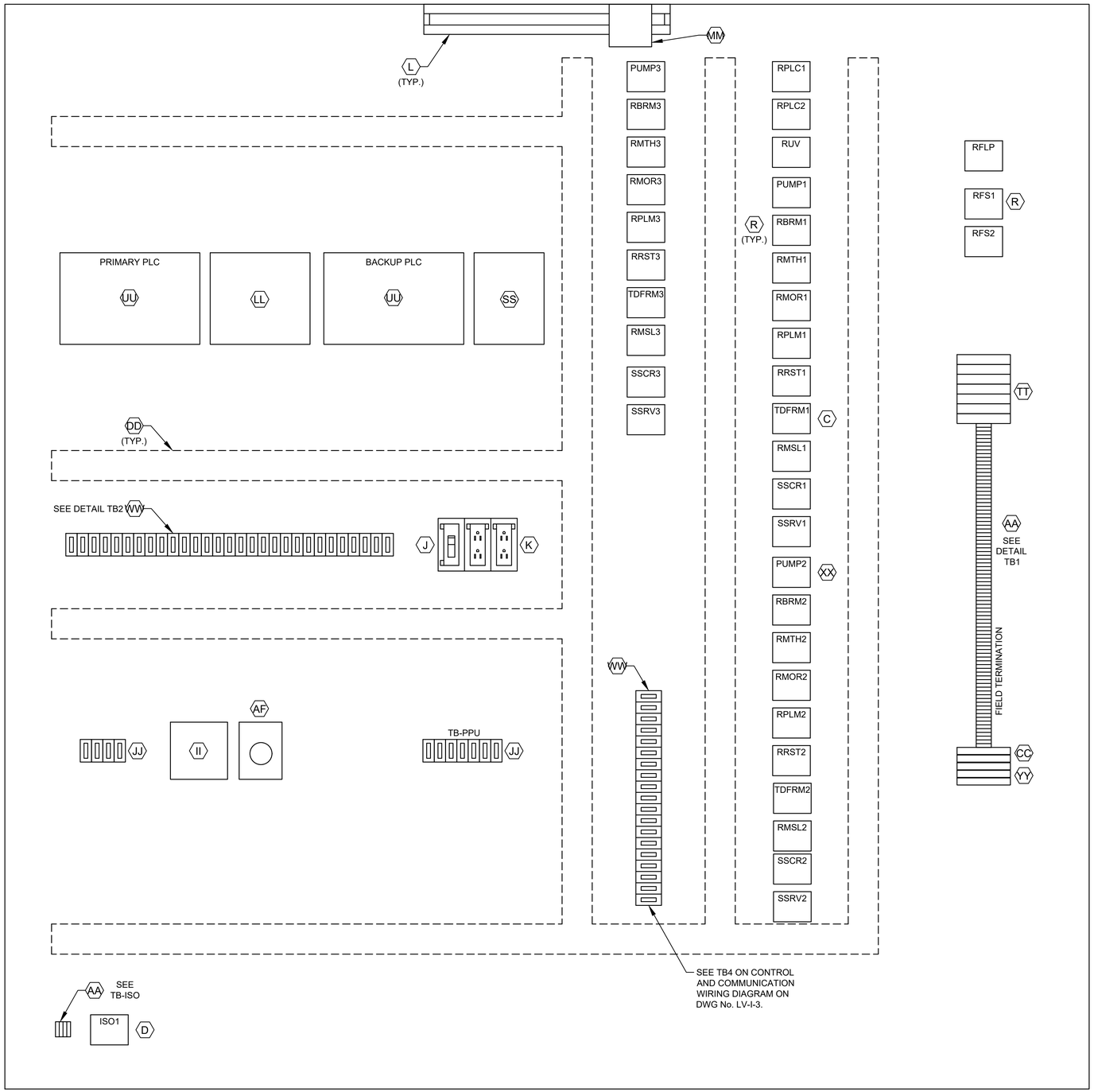

CONTROL PANEL
ELEVATION

DETAIL TB1
L1A
L1N
SPARE
3
3N
49
50
51
52
53
54
1004
1
24V-
24V-
1002
2
11
1001
1001A
12
1003
1003A
1002
1004
18
3N
19
20
36
36N
41
42
43
44
SPARE
L1A
L1N
103
104
105
106
107
108
110
113
115
116
119
SPARE
203
204
205
206
207
208
210
213
215
216
219

ALL L AND N FOR EACH PUMP CONTROL TO BE FUSED

DETAIL TB2
303
304
305
306
307
308
310
313
315
316
319
36A
37A
50
52
54
52A
54A
L+
M
35B
38B
41B
47B
13B
13AB
13GB
L+
M
14B
14AB
14GB
L+
M
13
13A
13G
14
14A
14G
SPARE
18
SPARE
28
29
32
35B
33
42
44
SPARE
103
104
115
109
110
118
120
121
122
123
SPARE
209
210
211
218
220
222
223

DETAIL TB-ISO
1500
1501
1503
1504

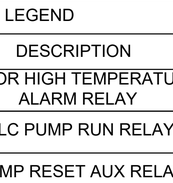

RELAY DETAIL
ITEM R

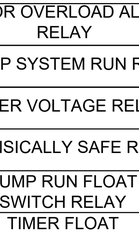

PUMP PROTECTION MODULE
DETAIL, ITEM XX
NOTE: REPLACE "X" WITH
APPROPRIATE PUMP NO.

LEGEND	
TAG	DESCRIPTION
RMTH	MOTOR HIGH TEMPERATURE ALARM RELAY
RPLM	PLC PUMP RUN RELAY
RRST	PUMP RESET AUX RELAY
RPLC	PLC MODE AUX RELAY
RMOR	MOTOR OVERLOAD ALARM RELAY
RBRM	BACKUP SYSTEM RUN RELAY
RUV	UNDER VOLTAGE RELAY
ISO	INTRINSICALLY SAFE RELAY
RFS	PUMP RUN FLOAT SWITCH RELAY
TDFRM	TIMER FLOAT SWITCH RUN RELAY
RMSL	MOTOR SEAL LEAK ALARM RELAY
RFLP	FLOAT LOCKOUT PUMP RELAY
SSCR	SOFT STARTER CONTROL RELAY
RFLP	SOFT STARTER MOTOR RELAY

NOTES:

1. SEE SHEET LV-I-4 FOR EQUIPMENT SCHEDULE.

LV–I–6

RPS
A TETRA TECH COMPANY
Texas PE Firm Reg. #F-929
575 N. Dairy Ashford, Suite 700,
Houston, Texas 77079
T +1 281 589 7257
E usinfrastructure@rpsgroup.com

SURVEYED BY:
FB NO. F–4578

FOR INTERIM REVIEW ONLY NOT INTENDED FOR PERMIT, BIDDING OR CONSTRUCTION PURPOSES.
ENGINEER:
HOSS FOROUZAN
P.E. SERIAL NO.77748
09/08/2026

CITY OF HOUSTON
HOUSTON PUBLIC WORKS

RECONSTRUCTION & REHABILITATION
COH LIFT STATIONS

LAKE VILLAGE LIFT STATION CONTROL CABINET EQUIPMENT LAYOUT–II

WBS NUMBER	FOR CITY OF HOUSTON USE ONLY
R–000267–00178–3	
DRAWING SCALE	
AS NOTED	
CITY OF HOUSTON PM	
TAHA LOTIA	
SHEET NO. 129 OF 147	

FILE PATH: O:\H8109_Lift Station Rehabilitation And Reconstruction (Tetratech)\6 Drawings\Instrumentation And Control\Working\Package No.1\LAKE SHTG_Lake Village–I–06.dwg PLOTTED: 9/8/2026 4:52 PM

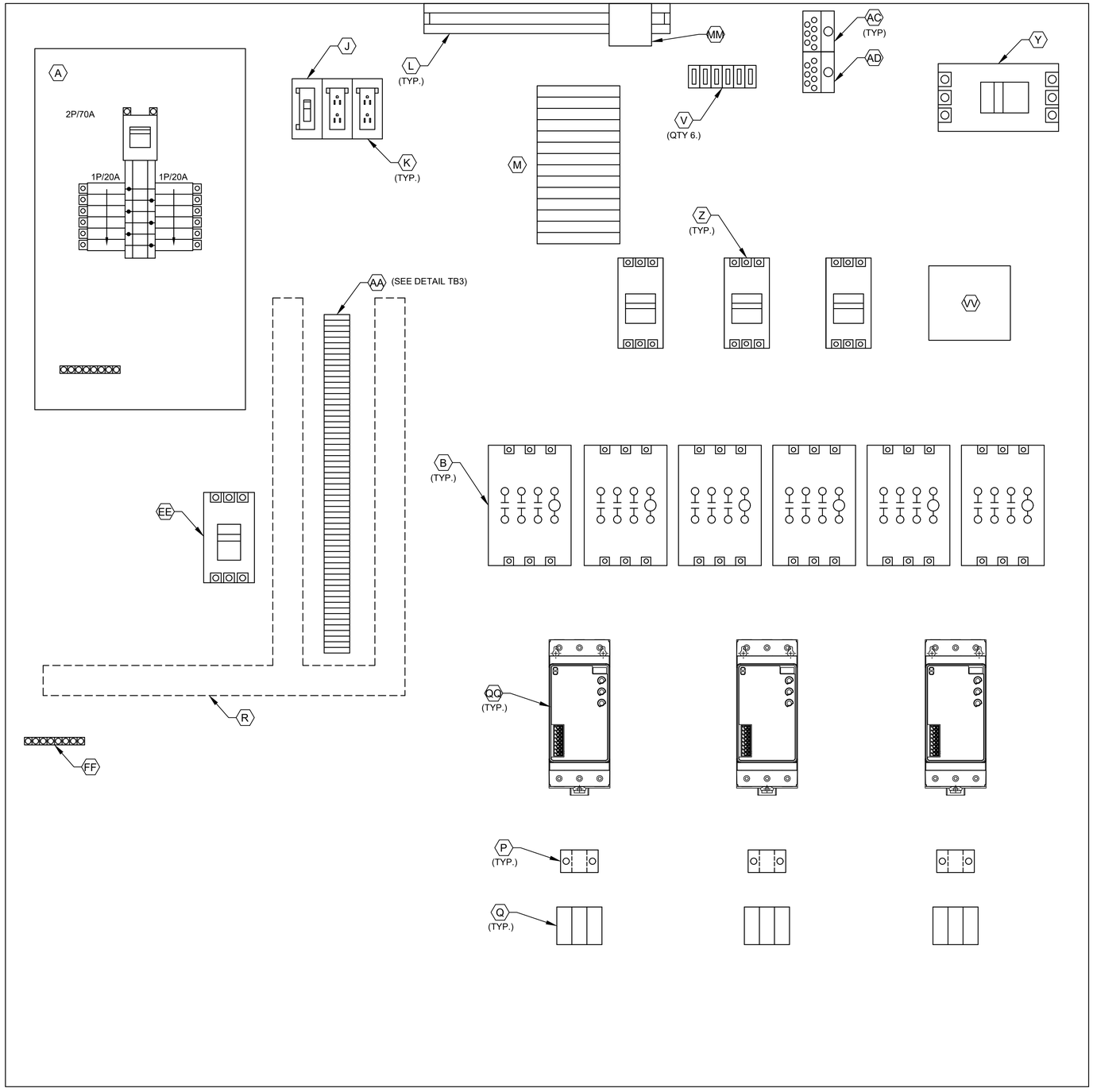

POWER PANEL
ELEVATION

3
18
L1A
L1N
SPARE
SPARE
103
104
105
106
107
108
110
113
115
116
119
SPARE
203
204
205
206
207
208
210
213
215
216
216
219
SPARE
303
304
305
306
307
308
310
313
315
316
316
319
SPARE
SPARE
SPARE
SPARE
SPARE
SPARE
SPARE
SPARE
SPARE
SPARE
SPARE

DETAIL TB3

NOTES:

1. SEE SHEET LV-I-4 FOR EQUIPMENT SCHEDULE.

rps
A TETRA TECH COMPANY
Texas PE Firm Reg. #F-929
575 N. Dairy Ashford, Suite 700,
Houston, Texas 77079
T +1 281 589 7257
E usinfrastructure@rpsgroup.com

FOR INTERIM REVIEW ONLY NOT INTENDED FOR PERMIT, BIDDING OR CONSTRUCTION PURPOSES.
ENGINEER:
HOSS FOROUZAN
P.E. SERIAL NO.77748
09/08/2026

SURVEYED BY:
FB NO. F-4578

CITY OF HOUSTON
HOUSTON PUBLIC WORKS

RECONSTRUCTION & REHABILITATION
COH LIFT STATIONS

LAKE VILLAGE LIFT STATION
CONTROL CABINET
EQUIPMENT LAYOUT-III

WBS NUMBER	FOR CITY OF HOUSTON USE ONLY
R-000267-00178-3	
DRAWING SCALE	
AS NOTED	
CITY OF HOUSTON PM	
TAHA LOTIA	
SHEET NO. 130 OF 147	

LV-I-7

FILE PATH: O:\H8109_Lift Station Rehabilitation And Reconstruction (Tetratech)\6 Drawings\Instrumentation And Control\Working\Package No.1\LAKE VILLAGE LIFT STATION\Lake Village-I-07.dwg PLOTTED: 9/8/2026 4:52 PM

FILE PATH: O:\H8109_Lift Station Rehabilitation And Reconstruction (Tetratech)\6 Drawings\Instrumentation And Control\Working\Package No.1\PLC\LV_Lake Village Lift Station_Lake Village-I-08.dwg PLOTTED: 9/8/2026 4:52 PM

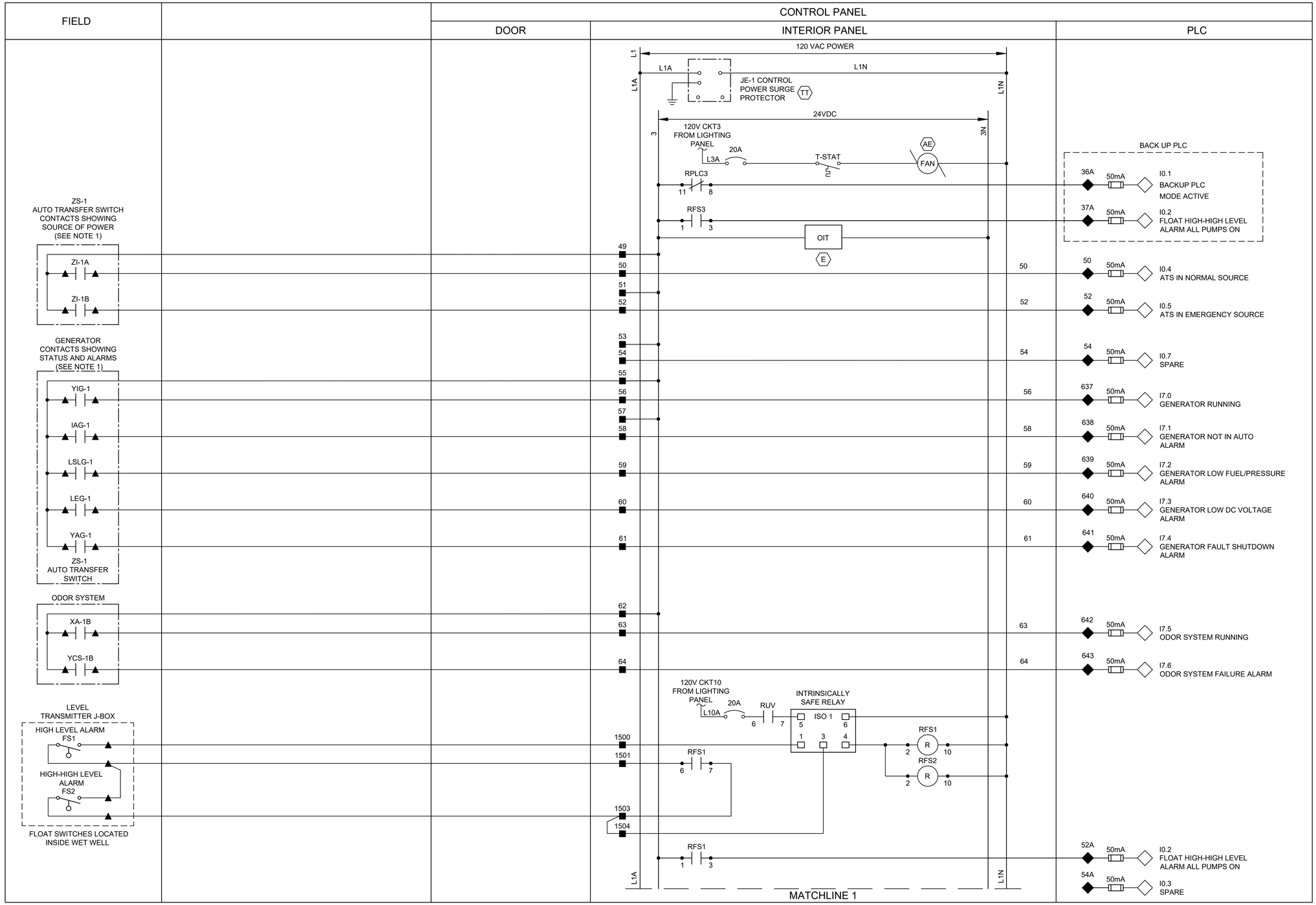

NOTES:

1. PROVIDE AUTO TRANSFER SWITCH DRY CONTACT.
2. ALL FLOAT CONTROL CIRCUIT WIRES COLOR SHALL BE YELLOW.

LEGEND

- △ DEVICE OR FIELD TERMINAL LOCATED AT MOTOR
- ✳ DEVICE OR FIELD TERMINAL LOCATED REMOTE
- □ DEVICE OR FIELD TERMINAL LOCATED AT MCC/POWER PANEL
- ■ FIELD TERMINAL LOCATED AT CONTROL PANEL
- ▲ REMOTE TERMINAL
- ● DEVICE TERMINAL NO.
- ◆ PLC INTERFACE TERMINAL

RPS
A TETRA TECH COMPANY
Texas PE Firm Reg. #F-929
575 N. Dairy Ashford, Suite 700,
Houston, Texas 77079
T +1 281 589 7257
E usinfrastructure@rpsgroup.com

SURVEYED BY:
FB NO. F-4578

FOR INTERIM REVIEW ONLY NOT INTENDED FOR PERMIT, BIDDING OR CONSTRUCTION PURPOSES.
ENGINEER:
HOSS FOROUZAN
P.E. SERIAL NO.77748
09/08/2026

CITY OF HOUSTON
HOUSTON PUBLIC WORKS

RECONSTRUCTION & REHABILITATION
COH LIFT STATIONS

LAKE VILLAGE LIFT STATION CONTROL PANEL CONTROL WIRING DIAGRAM—I

WBS NUMBER	FOR CITY OF HOUSTON USE ONLY
R-000267-00178-3	
DRAWING SCALE	
AS NOTED	
CITY OF HOUSTON PM	
TAHA LOTIA	
SHEET NO. 131 OF 147	

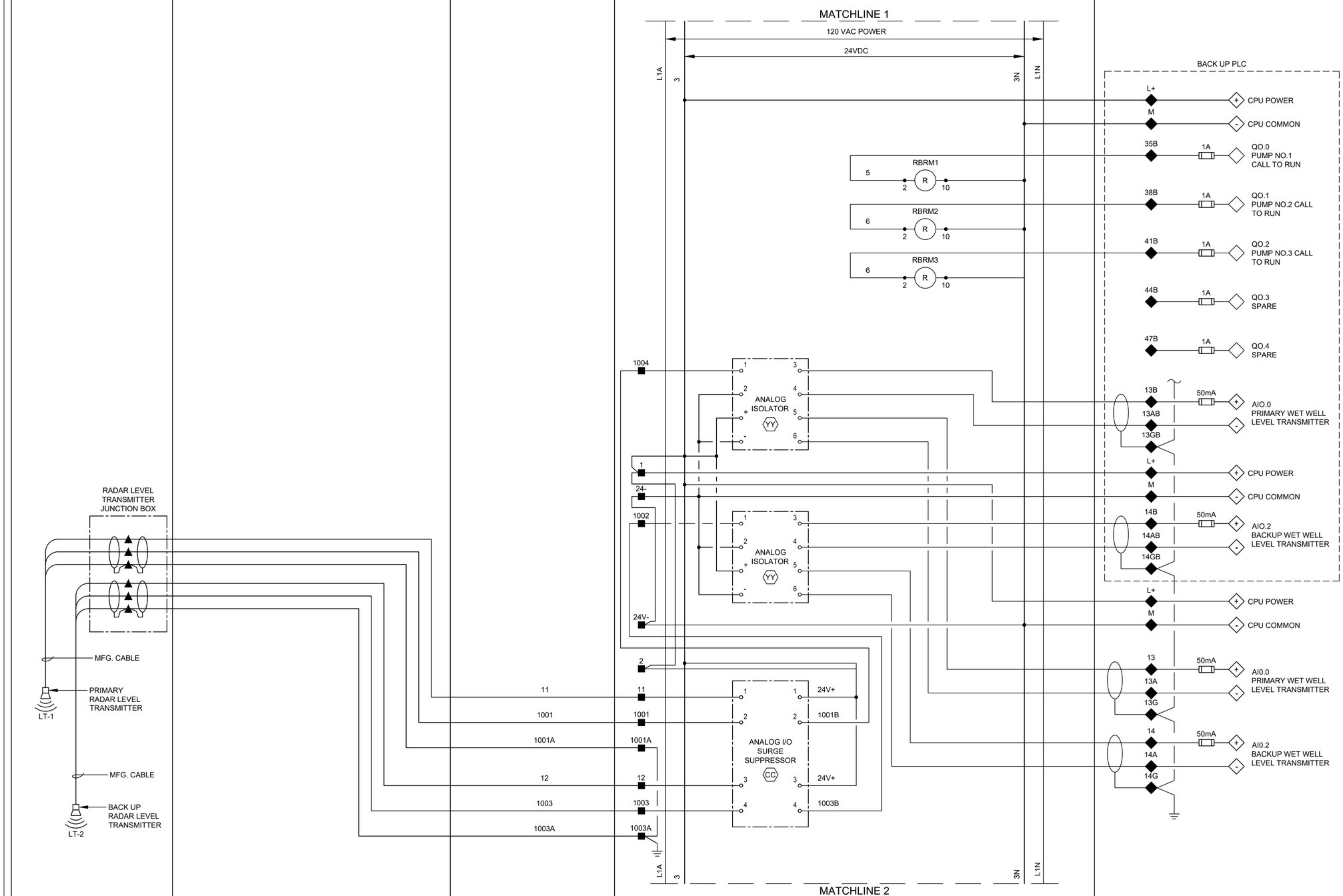

LEGEND

- △ DEVICE OR FIELD TERMINAL LOCATED AT MOTOR
- ✳ DEVICE OR FIELD TERMINAL LOCATED REMOTE
- □ DEVICE OR FIELD TERMINAL LOCATED AT MCC/POWER PANEL
- ■ FIELD TERMINAL LOCATED AT CONTROL PANEL
- ▲ REMOTE TERMINAL
- ● DEVICE TERMINAL NO.
- ◆ PLC INTERFACE TERMINAL

LV–I–9

rps
A TETRA TECH COMPANY
Texas PE Firm Reg. #F-929
575 N. Dairy Ashford, Suite 700,
Houston, Texas 77079
T +1 281 589 7257
E usinfrastructure@rpsgroup.com

FOR INTERIM REVIEW ONLY NOT INTENDED FOR PERMIT, BIDDING OR CONSTRUCTION PURPOSES.
ENGINEER:
HOSS FOROUZAN
P.E. SERIAL NO.77748
09/08/2026

SURVEYED BY:
FB NO. F–4578

CITY OF HOUSTON
HOUSTON PUBLIC WORKS

RECONSTRUCTION & REHABILITATION
COH LIFT STATIONS

LAKE VILLAGE LIFT STATION
CONTROL PANEL CONTROL
WIRING DIAGRAM–II

WBS NUMBER	FOR CITY OF HOUSTON USE ONLY
R–000267–00178–3	
DRAWING SCALE	
AS NOTED	
CITY OF HOUSTON PM	
TAHA LOTIA	
SHEET NO. 132 OF 147	

FILE PATH: O:\H8109_Lift Station Rehabilitation And Reconstruction (Tetratech)\6 Drawings\Instrumentation And Control\Working\Package No.1\Lake Village\LakeVillage-I-09.dwg PLOTTED: 9/8/2026 4:52 PM

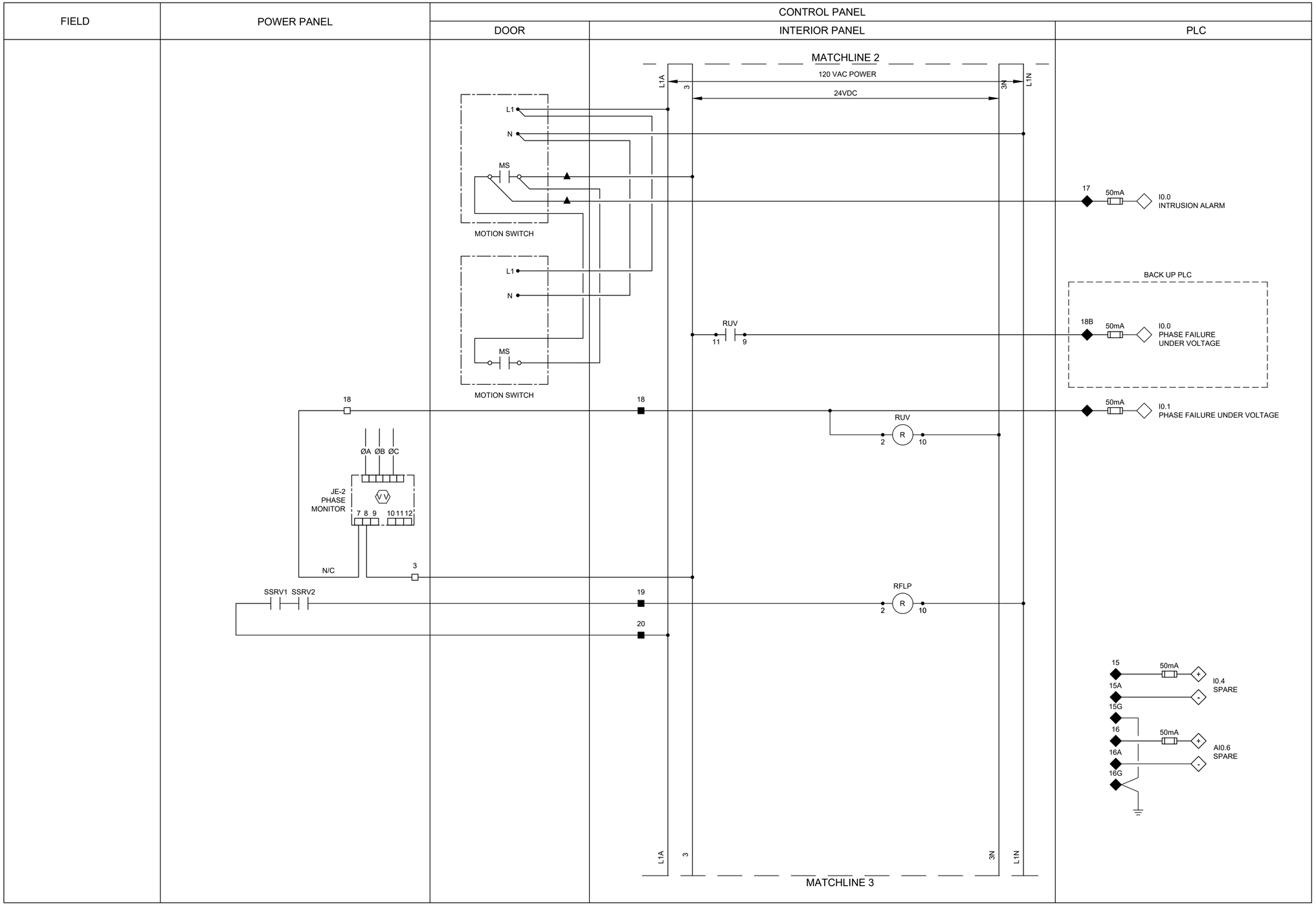

NOTES:

1. PROVIDE ONE LIMIT SWITCH PER EXTERIOR CONTROL PANEL AND POWER PANEL DOOR, WIRED IN PARALLEL.

LEGEND

- △ DEVICE OR FIELD TERMINAL LOCATED AT MOTOR
- ✳ DEVICE OR FIELD TERMINAL LOCATED REMOTE
- □ DEVICE OR FIELD TERMINAL LOCATED AT MCC/POWER PANEL
- ■ FIELD TERMINAL LOCATED AT CONTROL PANEL
- ▲ REMOTE TERMINAL
- ● DEVICE TERMINAL NO.
- ◆ PLC INTERFACE TERMINAL

rps
A TETRA TECH COMPANY
Texas PE Firm Reg. #F-929
575 N. Dairy Ashford, Suite 700, Houston, Texas 77079
T +1 281 589 7257
E usinfrastructure@rpsgroup.com

FOR INTERIM REVIEW ONLY NOT INTENDED FOR PERMIT, BIDDING OR CONSTRUCTION PURPOSES.
ENGINEER:
HOSS FOROUZAN
P.E. SERIAL NO.77748
09/08/2026

SURVEYED BY:
FB NO. F-4578

CITY OF HOUSTON
HOUSTON PUBLIC WORKS

RECONSTRUCTION & REHABILITATION
COH LIFT STATIONS

LAKE VILLAGE LIFT STATION
CONTROL PANEL CONTROL
WIRING DIAGRAM-III

WBS NUMBER	FOR CITY OF HOUSTON USE ONLY
R-000267-00178-3	
DRAWING SCALE	
AS NOTED	
CITY OF HOUSTON PM	
TAHA LOTIA	
SHEET NO. 133 OF 147	

LV-I-10

FILE PATH: O:\H8109_Lift Station Rehabilitation And Reconstruction (Tetratech)\6 Drawings\Instrumentation And Control\Working\Package No.1\Lake Village\Lake Village-I-10.dwg PLOTTED: 9/8/2026 4:52 PM

FIELD	POWER PANEL	CONTROL PANEL		
		DOOR	INTERIOR PANEL	PLC

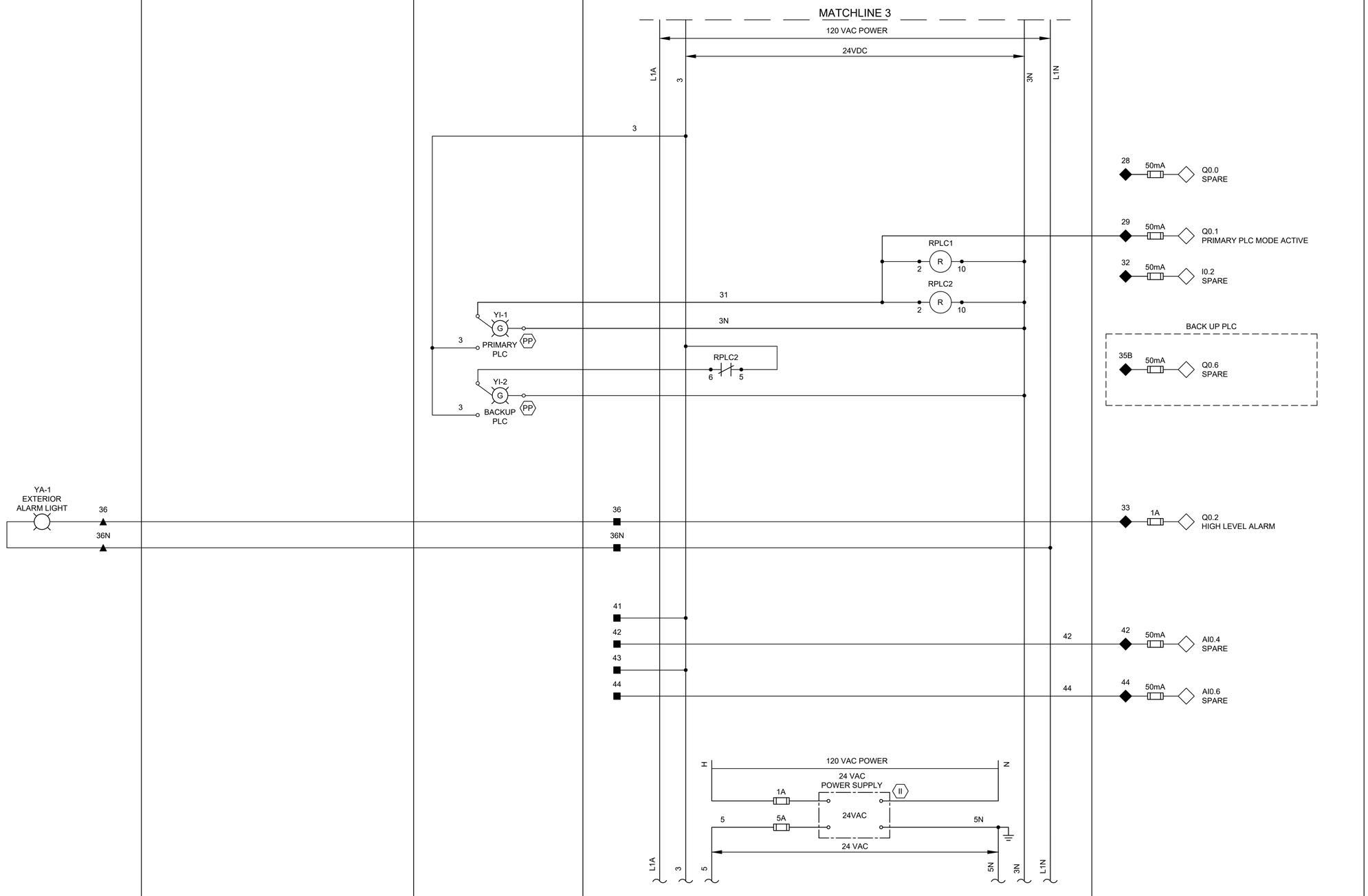

LEGEND

- △ DEVICE OR FIELD TERMINAL LOCATED AT MOTOR
- ✳ DEVICE OR FIELD TERMINAL LOCATED REMOTE
- □ DEVICE OR FIELD TERMINAL LOCATED AT MCC/POWER PANEL
- ■ FIELD TERMINAL LOCATED AT CONTROL PANEL
- ▲ REMOTE TERMINAL
- ● DEVICE TERMINAL NO.
- ◆ PLC INTERFACE TERMINAL

LV–I–11

RPS
A TETRA TECH COMPANY
Texas PE Firm Reg. #F-929
575 N. Dairy Ashford, Suite 700,
Houston, Texas 77079
T +1 281 589 7257
E usinfrastructure@rpsgroup.com

SURVEYED BY:
FB NO. F–4578

FOR INTERIM REVIEW ONLY NOT INTENDED FOR PERMIT, BIDDING OR CONSTRUCTION PURPOSES.
ENGINEER:
HOSS FOROUZAN
P.E. SERIAL NO.77748
09/08/2026

CITY OF HOUSTON
HOUSTON PUBLIC WORKS

RECONSTRUCTION & REHABILITATION
COH LIFT STATIONS

LAKE VILLAGE LIFT STATION CONTROL PANEL CONTROL WIRING DIAGRAM–IV

WBS NUMBER	FOR CITY OF HOUSTON USE ONLY
R–000267–00178–3	
DRAWING SCALE	
AS NOTED	
CITY OF HOUSTON PM	
TAHA LOTIA	
SHEET NO. 134 OF 147	

FILE PATH: O:\H8109_Lift Station Rehabilitation And Reconstruction (Tetratech)\6 Drawings\Instrumentation And Control\Working\Package No.1\PLC Schematics\Lake Village–I–11.dwg PLOTTED: 9/8/2026 4:52 PM

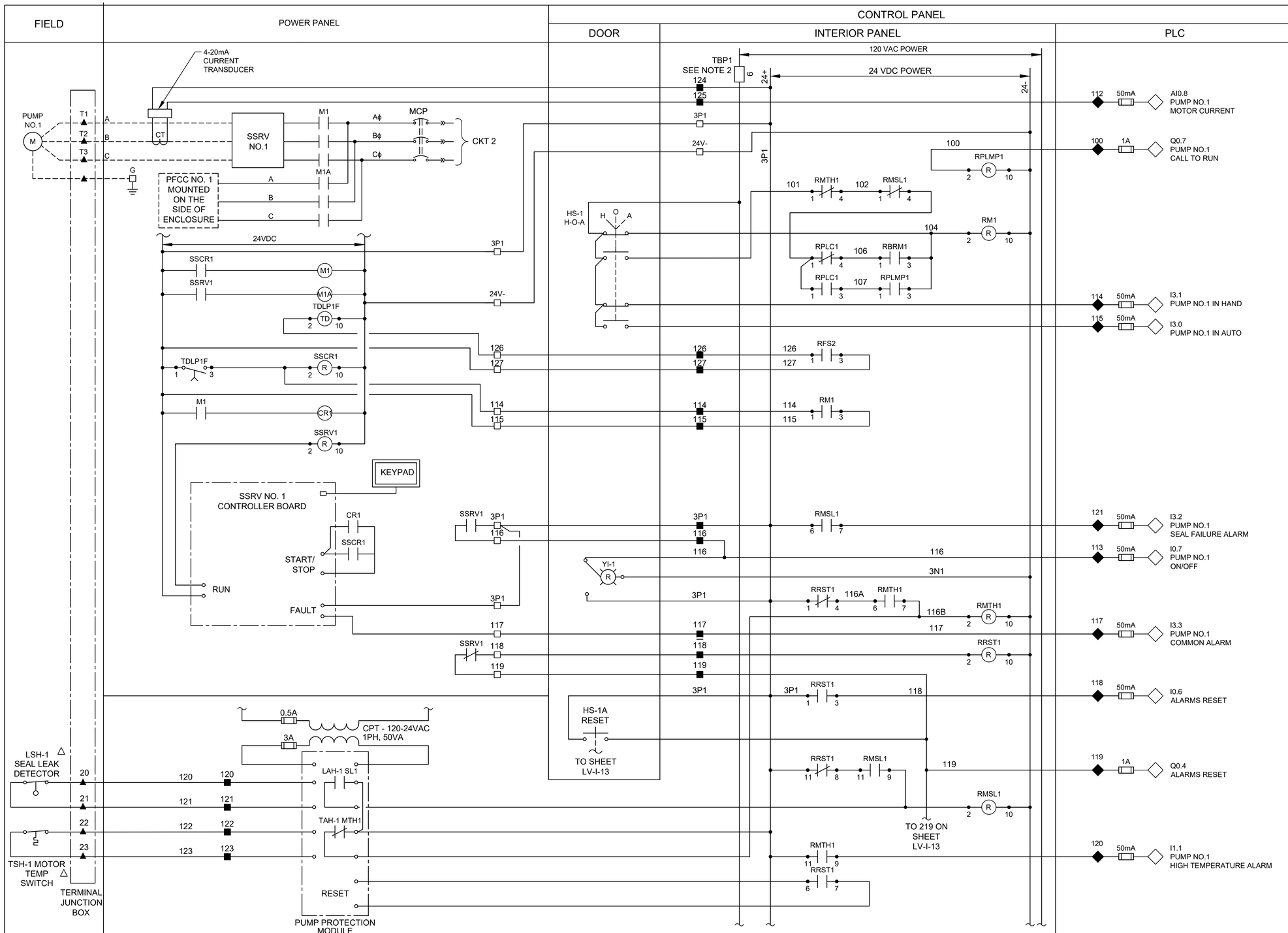

NOTES:

1. FUSED TERMINAL ON TERMINAL BLOCK TB4 SEE CONTROL POWER AND COMMUNICATION WIRING DIAGRAM DRAWING NO. LV-I-3.
2. ALL FLOAT CONTROL CIRCUIT WIRES COLOR SHALL BE YELLOW.

LEGEND

- △ DEVICE OR FIELD TERMINAL LOCATED AT MOTOR
- ✳ DEVICE OR FIELD TERMINAL LOCATED REMOTE
- □ DEVICE OR FIELD TERMINAL LOCATED AT MCC/POWER PANEL
- ■ FIELD TERMINAL LOCATED AT CONTROL PANEL
- ▲ REMOTE TERMINAL
- ● DEVICE TERMINAL NO.
- ◆ PLC INTERFACE TERMINAL

rps A TETRA TECH COMPANY
Texas PE Firm Reg. #F-929
575 N. Dairy Ashford, Suite 700, Houston, Texas 77079
T +1 281 589 7257
E usinfrastructure@rpsgroup.com

FOR INTERIM REVIEW ONLY NOT INTENDED FOR PERMIT, BIDDING OR CONSTRUCTION PURPOSES.
ENGINEER: HOSS FOROUZAN
P.E. SERIAL NO.77748
09/08/2026

SURVEYED BY:
FB NO. F-4578

CITY OF HOUSTON
HOUSTON PUBLIC WORKS

RECONSTRUCTION & REHABILITATION
COH LIFT STATIONS

LAKE VILLAGE LIFT STATION PUMP NO.1 CONTROL WIRING DIAGRAM

WBS NUMBER	FOR CITY OF HOUSTON USE ONLY
R-000267-00178-3	
DRAWING SCALE	
AS NOTED	
CITY OF HOUSTON PM	
TAHA LOTIA	
SHEET NO. 135 OF 147	

LV-I-12

FILE PATH: O:\H8109_Lift Station Rehabilitation And Reconstruction (Tetratech)\6 Drawings\Instrumentation And Control\Working\Package No.1\Lake Village\Lake Village-I-12.dwg PLOTTED: 9/8/2026 4:52 PM

FILE PATH: O:\H8109_Lift Station Rehabilitation And Reconstruction (Tetratech)\6 Drawings\Instrumentation And Control\Working\Package No.1\LV-I-13.dwg PLOTTED: 9/8/2026 4:52 PM

FIELD

CONTROL PANEL

DOOR

INTERIOR PANEL

PLC

PUMP NO.2
M
T1
T2
T3
A
B
C
G
CT
4-20mA CURRENT TRANSDUCER
SSRV NO.2
M2
MCP
Aϕ
Bϕ
Cϕ
CKT 3
M2A
PFCC NO. 2 MOUNTED ON THE SIDE OF ENCLOSURE
24VDC
SSCR2
SSRV2
TDLP2F
TD
R
CR2
KEYPAD
SSRV NO. 2 CONTROLLER BOARD
START/ STOP
RUN
FAULT
TBP2 SEE NOTE 2
7
120 VAC POWER
24 VDC POWER
24+
24-
3P2
3N2
HS-2 H-O-A
H
O
A
RPLMP2
RMTH2
RMSL2
RM2
RPLC1
RBRM2
RFS2
YI-2
RRST2
216A
216B
FROM SHEET LV-I-12
TO SHEET LV-I-14
FROM 119 ON SHEET LV-I-12
TO 319 ON SHEET LV-I-14
24 VAC POWER
3A
24N
LAH-2 SL2
TAH-2 MTH2
RESET
PUMP PROTECTION MODULE
LSH-2 SEAL LEAK DETECTOR
TSH-2 MOTOR TEMP SWITCH
TERMINAL JUNCTION BOX
AI1.0 PUMP NO.2 MOTOR CURRENT
Q1.0 PUMP NO.2 CALL TO RUN
I3.5 PUMP NO.2 IN HAND
I3.4 PUMP NO.2 IN AUTO
I3.6 PUMP NO.2 SEAL FAILURE ALARM
I1.2 PUMP NO.2 ON/OFF
I3.7 PUMP NO.2 COMMON ALARM
I1.3 PUMP NO.2 HIGH TEMPERATURE ALARM

LEGEND

△ DEVICE OR FIELD TERMINAL LOCATED AT MOTOR
✳ DEVICE OR FIELD TERMINAL LOCATED REMOTE
□ DEVICE OR FIELD TERMINAL LOCATED AT MCC/POWER PANEL
■ FIELD TERMINAL LOCATED AT CONTROL PANEL
▲ REMOTE TERMINAL
● DEVICE TERMINAL NO.
◆ PLC INTERFACE TERMINAL

NOTES:

1. FUSED TERMINAL ON TERMINAL BLOCK TB4 SEE CONTROL POWER AND COMMUNICATION WIRING DIAGRAM DRAWING NO. LV-I-3.
2. ALL FLOAT CONTROL CIRCUIT WIRES COLOR SHALL BE YELLOW.

RPS A TETRA TECH COMPANY
Texas PE Firm Reg. #F-929
575 N. Dairy Ashford, Suite 700, Houston, Texas 77079
T +1 281 589 7257
E usinfrastructure@rpsgroup.com

SURVEYED BY:
FB NO. F-4578

FOR INTERIM REVIEW ONLY NOT INTENDED FOR PERMIT, BIDDING OR CONSTRUCTION PURPOSES.
ENGINEER:
HOSS FOROUZAN
P.E. SERIAL NO.77748
09/08/2026

CITY OF HOUSTON
HOUSTON PUBLIC WORKS

RECONSTRUCTION & REHABILITATION
COH LIFT STATIONS

LAKE VILLAGE LIFT STATION PUMP NO.2 CONTROL WIRING DIAGRAM

WBS NUMBER	FOR CITY OF HOUSTON USE ONLY
R-000267-00178-3	
DRAWING SCALE	
AS NOTED	
CITY OF HOUSTON PM	
TAHA LOTIA	
SHEET NO. 136 OF 147	

LV-I-13

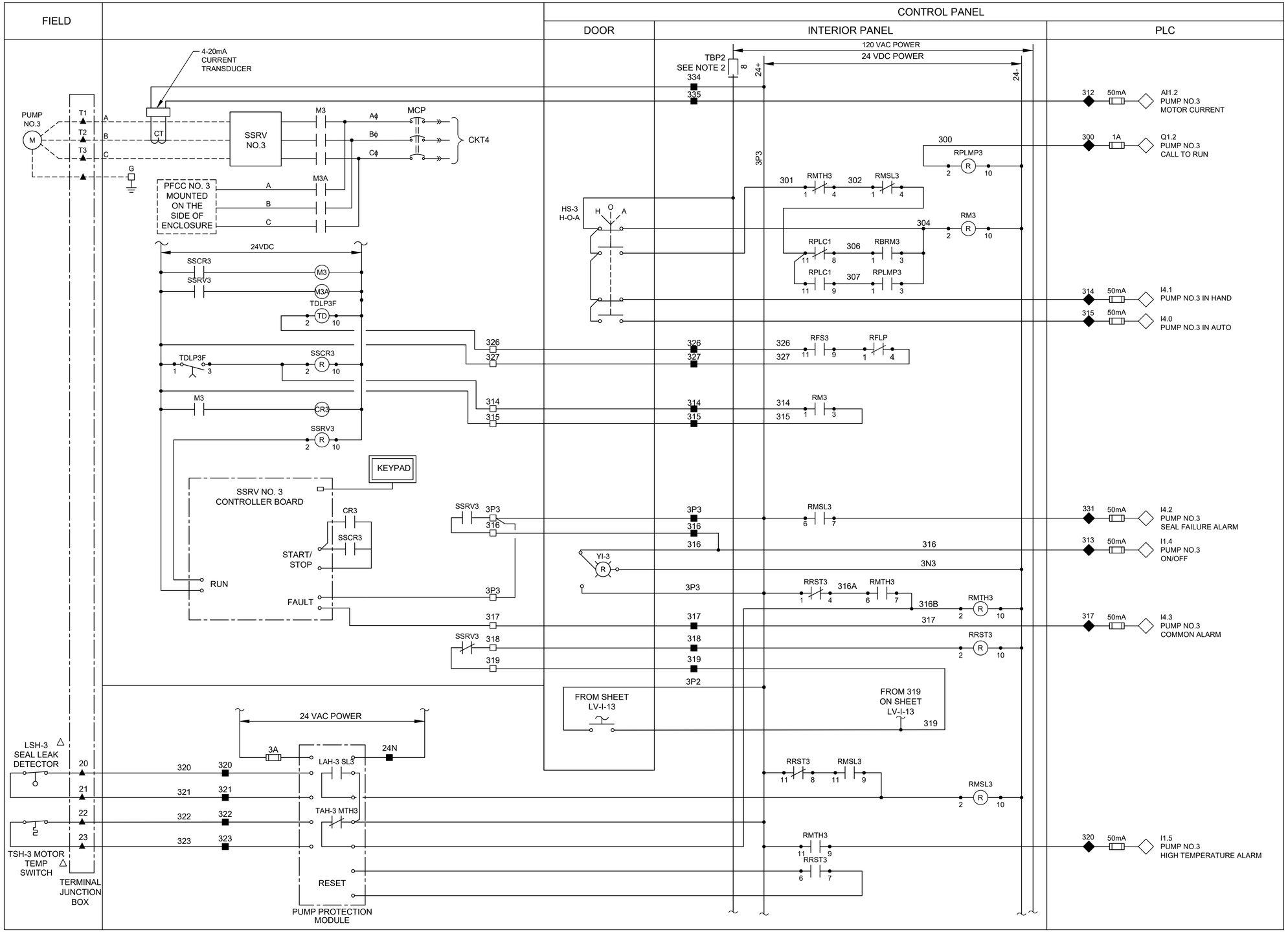

NOTES:

1. FUSED TERMINAL ON TERMINAL BLOCK TB4 SEE CONTROL POWER AND COMMUNICATION WIRING DIAGRAM DRAWING NO. LV-I-3.
2. ALL FLOAT CONTROL CIRCUIT WIRES COLOR SHALL BE YELLOW.

LEGEND

- △ DEVICE OR FIELD TERMINAL LOCATED AT MOTOR
- ✳ DEVICE OR FIELD TERMINAL LOCATED REMOTE
- □ DEVICE OR FIELD TERMINAL LOCATED AT MCC/POWER PANEL
- ■ FIELD TERMINAL LOCATED AT CONTROL PANEL
- ▲ REMOTE TERMINAL
- ● DEVICE TERMINAL NO.
- ◆ PLC INTERFACE TERMINAL

LV-I-14

rps A TETRA TECH COMPANY
Texas PE Firm Reg. #F-929
575 N. Dairy Ashford, Suite 700, Houston, Texas 77079
T +1 281 589 7257
E usinfrastructure@rpsgroup.com

FOR INTERIM REVIEW ONLY NOT INTENDED FOR PERMIT, BIDDING OR CONSTRUCTION PURPOSES.
ENGINEER: HOSS FOROUZAN
P.E. SERIAL NO.77748
09/08/2026

SURVEYED BY:
FB NO. F-4578

CITY OF HOUSTON
HOUSTON PUBLIC WORKS

RECONSTRUCTION & REHABILITATION
COH LIFT STATIONS

LAKE VILLAGE LIFT STATION PUMP NO.3 CONTROL WIRING DIAGRAM

WBS NUMBER	FOR CITY OF HOUSTON USE ONLY
R-000267-00178-3	
DRAWING SCALE	
AS NOTED	
CITY OF HOUSTON PM	
TAHA LOTIA	
SHEET NO. 137 OF 147	

FILE PATH: O:\H8109_Lift Station Rehabilitation And Reconstruction (Tetratech)\6 Drawings\Instrumentation And Control\Working\Package No.1\Lake Village\LakeVillage-I-14.dwg PLOTTED: 9/8/2026 4:52 PM

SYMBOLS	DESCRIPTION
52 CS	MEDIUM VOLTAGE DRAWOUT TYPE POWER CIRCUIT BREAKER CS-CONTROL SWITCH
(E.O.) FRAME TRIP	LOW VOLTAGE CIRCUIT BREAKER, 3 POLE UNLESS OTHERWISE NOTED. LSIG IF NOTED MCP IF NOTED ERMS IF NOTED
✳ OR	COMBINATION MOTOR CIRCUIT PROTECTOR AND MAGNETIC MOTOR STARTER, FULL VOLTAGE NON-REVERSING UNLESS OTHERWISE NOTED: ✳ FVR-FULL VOLTAGE REVERSING RVNR-REDUCED VOLTAGE NON-REVERSING 2S1W-TWO SPEED, ONE WINDING 2S2W-TWO SPEED, TWO WINDING
✳ OR	NON-FUSIBLE DISCONNECT SWITCH, 600 VOLT, 3 POLE ✳ AMPERE RATING NOTED IF OTHER THAN 30A
✳ ✱ OR F	FUSIBLE DISCONNECT SWITCH, 600 VOLT, 3 POLE, AMPERE RATING AND FUSE SIZE AS NOTED: ✳ AMPERE RATING NOTED IF OTHER THAN 30A ✱ FUSE RATING
MIS OR I	MOTOR ISOLATION SWITCH, HORSEPOWER RATED
	DRAWOUT TYPE EQUIPMENT OR DEVICE
	MEDIUM VOLTAGE CABLE TERMINATION
	MEDIUM VOLTAGE AIR INTERRUPTER SWITCH
	MEDIUM VOLTAGE FUSED AIR INTERRUPTER SWITCH
	MEDIUM VOLTAGE FUSED MOTOR CONTROLLER
30KVA 480V- 120/208Y K-*	TRANSFORMER, RATINGS AND CONNECTIONS AS NOTED. UNLESS OTHERWISE NOTED ON THE SINGLE LINE DIAGRAMS ALL DRY TYPE TRANSFORMERS SERVICING ADMINISTRATIVE AND LABORATORY SPACES SHALL HAVE A K FACTOR OF 13. ALL OTHER DRY TYPE TRANSFORMERS SHALL HAVE A K-4 RATING. ISOLATION TRANSFORMERS SHALL HAVE A K-20 RATING
✳ A:5	CURRENT TRANSFORMER: ✳ QUANTITY A= PRIMARY AMPERES
✳ PV-SV	POTENTIAL TRANSFORMER: ✳ QUANTITY PV= PRIMARY VOLTAGE SV= SECONDARY VOLTAGE
	GENERATOR, RATINGS AND CONNECTIONS AS NOTED
100A ATS-1 N S	TRANSFER SWITCH AUTOMATIC TRANSFER SWITCH (EG ATS-1) MANUAL TRANSFER SWITCH (EG MTS-1) "N" INDICATES NORMAL SOURCE "S" INDICATES STANDBY SOURCE 100A INDICATES CONTINUOUS CURRENT RATING
✳	VARIABLE SPEED DRIVE CONTROLLER ✳ D.C.= D.C. DRIVE CONTROLLER SCR= SILICON CONTROLLED RECTIFIER VFD= VARIABLE FREQUENCY DRIVE AFD= ADJUSTABLE FREQUENCY DRIVE
	VACUUM CONTACTOR
5KW OR E	UNIT HEATER - ELECTRIC HEATING COIL AND FAN
5KW OR U	UNIT HEATER - STEAM OR WATER HEATING COIL AND FAN
M	MOTOR, NUMERAL INDICATES HORSEPOWER
SPD	SURGE PROTECTION DEVICE
VFD	VARIABLE FREQUENCY DRIVE

SYMBOLS	DESCRIPTION
VM ✳	VOLTMETER (WITH SWITCH IF 3-PHASE)
AM ✳	AMMETER (WITH SWITCH IF 3-PHASE)
*	METER ✳ WM- WATTMETER WHM- WATTHOUR METER WHDM- WATTHOUR DEMAND METER WHDR- WATTHOUR DEMAND RECORDER PF- POWER FACTOR METER RT- RUNNING TIME METER TRANSDUCER AX- CURRENT TRANSDUCER WX- WATT TRANSDUCER
#	RELAY, NO. AS INDICATED 25- SYNCHRONISM CHECK RELAY 27- UNDER VOLTAGE RELAY 38- BEARING PROTECTIVE DEVICE 40- LOSS OF EXCITATION RELAY 42- RUNNING CONTACTOR/PILOT RELAY 46- REVERSE PHASE/PHASE BALANCE/CURRENT RELAY 47- PHASE SEQUENCE VOLTAGE RELAY 49- MACHINE OR TRANSFORMER THERMAL RELAY 50- INSTANTANEOUS OVERCURRENT RELAY 50G- INSTANTANEOUS GROUND 51- TIME OVER CURRENT RELAY 51G- TIME OVERCURRENT RELAY, GROUNDING RESISTOR TYPE 51N- TIME OVERCURRENT RELAY, RESIDUAL TYPE 51V- TIME OVERCURRENT RELAY WITH VOLTAGE RESTRAINT 60- NEGATIVE SEQUENCE VOLTAGE RELAY 62- TIME DELAY RELAY 63- OVER PRESSURE RELAY 67- AC DIRECTIONAL OVERCURRENT RELAY 83- AUTOMATIC SELECTIVE CONTROL OR TRANSFER RELAY 86- LOCKING-OUT RELAY 87- DIFFERENTIAL PROTECTIVE RELAY B- SUFFIX INDICATES "BUS" G- SUFFIX INDICATES "GENERATOR" GF- GROUND FAULT ST- SHUNT TRIP T- SUFFIX INDICATES "TRANSFORMER" X- SUFFIX INDICATES "AUXILIARY"
*	SPECIAL CAPACITOR ✳ SC- SURGE CAPACITOR PF- POWER FACTOR CORRECTION CAPACITOR INCLUDING INDUCTIVE LINK AS NEEDED
	PUSH BUTTON, MOMENTARY CONTACT, SPRING RETURN, NORMALLY CLOSED
	PUSH BUTTON, MOMENTARY CONTACT, SPRING RETURN, NORMALLY OPEN
E-STOP	EMERGENCY STOP PUSH BUTTON WITH RED MUSHROOM HEAD OPERATOR (MAINTAINED CONTACT)
✳ N	STOP PUSH BUTTON WITH RED HEAD OPERATOR (MAINTAINED CONTACT) WITH LOCKABLE OPTION ✳: E-STOP ✳: STOP
STOP START	START-STOP PUSH BUTTON CONTROL STATION (MOMENTARY CONTACT) "L" DENOTES LOCKOUT TYPE
STOP START	START-STOP PUSH BUTTON CONTROL STATION, MAINTAINED CONTACT WITH LOCKOUT DEVICE ON STOP
OFF ON	OFF/ON SELECTOR SWITCH
A B C ✳ (XOO) (OOX)	3 POSITION SELECTOR SWITCH, MAINTAINED CONTACT O-OPEN X-CLOSED

POSITION	TOP CONTACT	MIDDLE CONTACT	BOTTOM CONTACT
A	X	O	O
B	0	0	O
C	0	O	X

✳ NAMEPLATE (A/B/C)
HOA- HAND/OFF/AUTO
HOR- HAND/OFF/REMOTE
LOR- LOCAL/OFF/REMOTE
RSL- RAISE/STOP/LOWER
TOA- TEST/OFF/AUTO

NOTE: 2 POSITION MULTI-CONTACT SWITCH FOLLOWS SAME CONVENTION

M #	MOTOR STARTER COIL, NUMBER AS INDICATED
CR #	CONTROL RELAY COIL, NUMBER AS INDICATED
	RVSS: REDUCED VOLTAGE STATIC SOLID SOFT STARTER

SYMBOLS	DESCRIPTION
*	PILOT LIGHT, COLOR AS NOTED ✳ R- RED G- GREEN B- BLUE W- WHITE A- AMBER
* PTT	PILOT LIGHT, PUSH-TO-TEST TYPE, COLOR AS NOTED ABOVE.
TD	TIME DELAY RELAY RANGE AS NOTED SET POINT AS NOTED TDD-TIME DELAY AFTER DE-ENERGIZATION-OFF DELAY TDE-TIME DELAY AFTER ENERGIZATION-ON DELAY
	NOTC-NORMALLY OPEN, TIMED CLOSING WHEN ENERGIZED
	NCTO-NORMALLY CLOSED, TIMED OPENING WHEN ENERGIZED
	NOTO-NORMALLY OPEN, TIMED OPENING WHEN DE-ENERGIZED
	NCTC-NORMALLY CLOSED, TIMED CLOSING WHEN DE-ENERGIZED
⊗	FIELD INSTRUMENT, TAG NO. OR LOOP # AS INDICATED ✳INDICATES INSTRUMENT TYPE DEFINED ON LOOP SHEETS ## - INDICATES LOOP NO.
OR ⊗	LIQUID LEVEL (FLOAT) SWITCH NORMALLY OPEN, CLOSES ON RISING LEVEL NORMALLY CLOSED, OPENS ON RISING LEVEL NORMALLY OPEN, CLOSES ON DROPPING LEVEL NORMALLY CLOSED, OPENS ON DROPPING LEVEL
OR ⊗	PRESSURE OR VACUUM SWITCH NORMALLY OPEN, CLOSES ON RISING PRESSURE NORMALLY CLOSED, OPENS ON RISING PRESSURE NORMALLY OPEN, CLOSES ON DROPPING PRESSURE NORMALLY CLOSED, OPENS ON DROPPING PRESSURE
OR ⊗	TEMPERATURE SWITCH OR THERMOSTAT NORMALLY OPEN, CLOSES ON RISING TEMPERATURE NORMALLY CLOSED, OPENS ON RISING TEMPERATURE NORMALLY OPEN, CLOSES ON DROPPING TEMPERATURE NORMALLY CLOSED, OPENS ON DROPPING TEMPERATURE
OR ⊗	FLOW SWITCH (AIR, WATER, ETC.) NORMALLY OPEN, CLOSES ON INCREASED FLOW NORMALLY OPEN, CLOSES ON DROPPING FLOW NORMALLY CLOSED, OPENS ON INCREASED FLOW NORMALLY CLOSED, OPENS ON DROPPING FLOW
OR ⊗	POSITION (LIMIT) SWITCH NORMALLY OPEN NORMALLY OPEN - HELD CLOSED NORMALLY CLOSED NORMALLY CLOSED - HELD OPEN
OR ⊗	TORQUE SWITCH NORMALLY CLOSED, OPENS ON HIGH TORQUE
	CONDUCTORS OR CONDUITS CROSSING PATHS BUT NOT CONNECTED
	CONDUCTORS ELECTRICALLY CONNECTED
FAN	SUPPLY/EXHAUST FAN

SYMBOLS	DESCRIPTION
LA SC	LIGHTNING ARRESTER/SURGE CAPACITOR
OR	GROUND ROD GROUND ROD WELL
30A	FUSE, AMPERE RATING AS NOTED
OR HTR	HEATER
	INDUCTOR
TG	TACHOMETER GENERATOR
	CONTACT, NORMALLY OPEN (NO)
	CONTACT, NORMALLY CLOSED (NC)
	OVERLOAD RELAY HEATER
K	KEY INTERLOCK
TB	TERMINAL OR TEST BLOCK
RTD	RESISTANCE TEMPERATURE DETECTOR
VE	VIBRATION DETECTOR
DM	DAMPER MOTOR
ETM OR	ELAPSED TIME METER
MOV	MOTOR OPERATED VALVE
	PUSH BUTTON STATION, REFER TO ELECTRICAL SCHEMATIC FOR NUMBER OF DEVICES.
J	JUNCTION BOX
JP	POWER JUNCTION BOX
JI	4-20mA SIGNAL JUNCTION BOX
JC	CONTROL JUNCTION BOX
PB	PULL BOX
TC	TERMINATION CABINET
	REMOTE DEVICES
5	MOV WITHOUT INTEGRATED DISCONNECT
5	MOV WITH INTEGRATED DISCONNECT
	INDICATES LIMITS OF EQUIPMENT OR WIRING ENCLOSURE
MPR	(MPR) MOTOR PROTECTION RELAY

GENERAL NOTE

THIS IS A STANDARD LEGEND. SOME SYMBOLS MAY NOT APPEAR ON THE DRAWINGS.

NO.	DATE	REVISION	APP.
	MM/DD/YY	BRIEF DESCRIPTION	XXX
	MM/DD/YY	BRIEF DESCRIPTION	XXX
	MM/DD/YY	BRIEF DESCRIPTION	XXX

RPS A TETRA TECH COMPANY
Texas PE Firm Reg. #F-929
575 N. Dairy Ashford, Suite 700, Houston, Texas 77079
T +1 281 589 7257
E usinfrastructure@rpsgroup.com

SURVEYED BY:
FB NO. F-4578

FOR INTERIM REVIEW ONLY NOT INTENDED FOR PERMIT, BIDDING OR CONSTRUCTION PURPOSES.
ENGINEER:
HOSS FOROUZAN
P.E. SERIAL NO.77748
09/08/2026

CITY OF HOUSTON
HOUSTON PUBLIC WORKS

RECONSTRUCTION & REHABILITATION
COH LIFT STATIONS

ELECTRICAL LEGENDS & SYMBOLS-I

WBS NUMBER	FOR CITY OF HOUSTON USE ONLY
R-000267-00178-3	
DRAWING SCALE	
AS NOTED	
CITY OF HOUSTON PM	
TAHA LOTIA	
SHEET NO. 138 OF 147	

STD-E-1

FILE PATH: O:\H8109_Lift Station Rehabilitation And Reconstruction (Tetratech)\6 Drawings\Electrical\Working\Package No.1\General\H8109_G-P001.dwg
PLOTTED: 9/8/2026 4:47 PM
STYLE: COH.ctb

SYMBOLS	DESCRIPTION
A LA-3 b	REFER TO LIGHT FIXTURE SCHEDULE FOR TYPE FIXTURE: "A"- FIXTURE TYPE "b"- CONTROLLED BY SWITCH "b" "LA-3"- CIRCUIT 3 FROM PANEL LA
b A LA-3	REFER TO LIGHT FIXTURE SCHEDULE FOR TYPE FIXTURE, NOTATIONS SAME AS ABOVE
A LA-3 OR A LA-3 NS	INDICATES LIGHT FIXTURES WHICH ARE NONSWITCHED, NOTATIONS SAME AS ABOVE "NS" - NONSWITCHED
A LA-3 b	WALL MOUNTED LIGHTING FIXTURE, NOTATIONS SAME AS ABOVE
A LA-3 b	POLE MOUNTED LIGHTING FIXTURE, NOTATIONS SAME AS ABOVE
A LA-3	EMERGENCY LIGHTING BATTERY UNIT WITH TWO LAMP HEADS, NOTATIONS SAME AS ABOVE
A	REMOTE EMERGENCY ADJUSTABLE WALL LIGHTING FIXTURE WITH TWO LAMP HEADS, NOTATIONS SAME AS ABOVE
A LA-3	CEILING MOUNTED EXIT SIGN, NOTATIONS SAME AS ABOVE
A LA-3	WALL OUTLET EXIT SIGN. ARROW INDICATES DIRECTION OF EGRESS, NOTATIONS SAME AS ABOVE
	CONDUIT, EXPOSED/SURFACE MOUNTED
	CONDUIT OR DUCTBANK, CONCEALED
	CONDUIT, EXPOSED/SURFACE MOUNTED, TURNING UP
	CONDUIT, EXPOSED/SURFACE MOUNTED, TURNING DOWN
	CONDUIT STUBBED OUT AND CAPPED
2(3#3/0+1#2G, 3"C)	DENOTES A QUANTITY OF 2 SETS OF THREE (3) NO.3/0 AWG CONDUCTORS AND 1 NO.AWG GROUND CONDUCTOR EACH INSTALLED IN 3" CONDUIT.
2(2/C#16TS)	DENOTES A QUANTITY OF TWO INSTRUMENT CABLES. EACH CONSISTS OF TWO NO.16 AWG CONDUCTORS TWISTED TOGETHER AND COVERED WITH A METALLIC SHIELD AND AN OVERALL PROTECTIVE JACKET. REFER TO THE SPECIFICATIONS FOR THE EXACT CABLE TO BE PROVIDED.
3(4"C)	DENOTES A QUANTITY OF THREE 4-INCH CONDUITS.
	FLEXIBLE METAL CONDUIT "WHIP" (2#12, #12G, 3/4"C UNLESS OTHERWISE NOTED) FOR RECESSED LIGHTING FIXTURES AND LIQUID TIGHT MOTOR CONNECTIONS
LP#-1,3	HOMERUN, CIRCUITS 1 AND 3 RUN TO PANEL LP-1
$b	SINGLE POLE SWITCH "b"- INDICATES SWITCH LEG SHALL CONTROL LIGHT FIXTURES WITH "b" DESIGNATION
$b^x	MULTI POLE SWITCH "x"- INDICATES NUMBER OF POLE "b"- NOTATIONS SAME AS ABOVE
$b^P	SINGLE POLE SWITCH AND PILOT LIGHT, "b"- NOTATIONS SAME AS ABOVE
$b^D	DIMMER LIGHTING CONTROL SWITCH, "b"- NOTATIONS SAME AS ABOVE
$b^TM	TIME SWITCH, "b"-NOTATIONS SAME AS ABOVE
$^M	MANUAL MOTOR STARTER /DISCONNECT
$^OS	SINGLE POLE SWITCH WITH OCCUPANCY SENSOR
$^DM	SINGLE POLE DIMMER SWITCH
$x b xx	SWITCH ENCLOSURE "x"- NOTATIONS SAME AS ABOVE "b"- NOTATIONS SAME AS ABOVE "xx"- INDICATES ENCLOSURE TYPE
LC-1	LIGHTING CONTACTOR WITH NUMBER OF POLES AS INDICATED

SYMBOLS	DESCRIPTION
L*-## OR L*-##	LIGHTING PANELBOARD (TYPICAL 120V/240V OR 120V/208V)
H*-## OR H*-##	DISTRIBUTION PANELBOARD (TYPICAL 277V/480V)
LA-3	DUPLEX RECEPTACLE, 20A, 120V, 2P, 3W ✳ GFI- GROUND FAULT INTERRUPTER TYPE WP- WEATHERPROOF "LA-3"- CIRCUIT 3 FROM PANEL LA
	WELDING RECEPTACLE
	20A, 240V, 2P, 3W, RECEPTACLE
	CLASS 1, DIVISION 1, RATED TWIST LOCK RECEPTACLE, VOLTAGE AND AMPERAGE RATING AS NOTED
✳	SINGLE FACE, SINGLE GANG PEDESTAL WITH 20A, 120V, 2P, 3W DUPLEX RECEPTACLE, FURNISHED AND INSTALLED UNDER DIVISION 16 UNLESS OTHERWISE NOTED. * DENOTES FURNISHED UNDER OTHER DIVISIONS OF THE SPECIFICATIONS BUT INSTALLED UNDER DIVISION 16
D ✳	DOUBLE FACE, SINGLE GANG PEDESTAL WITH 20A, 120V, 2P, 3W DUPLEX RECEPTACLE AND 20A, 240V, 2P, 3W SINGLE RECEPTACLE, FURNISHED AND INSTALLED UNDER DIVISION 16 UNLESS OTHERWISE NOTED. * DENOTES FURNISHED UNDER OTHER DIVISIONS OF THE SPECIFICATIONS BUT INSTALLED UNDER DIVISION 16
	DOUBLE RECEPTACLE, 20A, 120V, 2P, 3W MOUNTED IN BOX CURB FURNISHED UNDER OTHER DIVISIONS OF THE SPECIFICATIONS BUT INSTALLED UNDER DIVISION 16
	SINGLE GANG 20A, 120V, 3P, 3W RECEPTACLE
	QUAD RECEPTACLE
OS	OCCUPANCY SENSOR CAPABLE OF VACANCY
PC	PHOTOCELL
	QUICK CONNECT TERMINALS

TAGGING		
EQUIPMENT	EQUIPMENT TAG	CONDUIT TAG
MOTOR CONTROL CENTER	MCC-1	MC1-XX
SWITCHBOARD	SWBD-1	SB1-XX
SWITCHGEAR	SWGR-1	SG1-XX
PROGRAMMABLE LOGIC CABINET	PLC-1	PL1-XX
VARIABLE FREQUENCY DRIVE	VFD-1	VF1-P
LOW VOLTAGE TRANSFORMER	TX-LX OR TX-HX	TXLX-P OR TXHX-P
SERVICE TRANSFORMER	TX-1	TX1-P
GENERATOR	GEN-1	GN1-X
LIGHTING/POWER PANELBOARD	LP/PP-XX	XX-XX
AUTOMATIC TRANSFER SWITCH	ATS-1	AT1-XX
TYPICAL TAG FOR CONDUIT FROM THIS EQUIPMENT TO DOWN STREAM LOAD FOR EXAMPLE.		

EXAMPLE LEGEND:

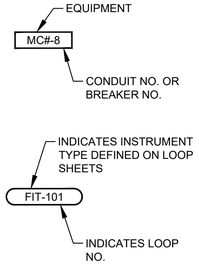

SYMBOLS	DESCRIPTION
COMMUNICATIONS SYSTEMS	
	TELEPHONE OUTLET
	DATA OUTLET
P	DATA INPUT/OUTPUT CABLE OUTLET. "P" DENOTES PROCESS COMPUTER SYSTEM
	VOICE/DATA OUTLET
S	PAGING SPEAKER HORN
S	PAGING SPEAKER BI-DIRECTIONAL
S	PAGING SPEAKER, CEILING MOUNTED TYPE
S	PAGING SPEAKER, WALL MOUNTED TYPE
SECURITY SYSTEMS	
SAP	SECURITY ALARM PANEL
DS	SECURITY ALARM DOOR SWITCH
KP	SECURITY ALARM KEY PAD
CR	SECURITY SYSTEM CARD ACCESS READER
WS	SECURITY ALARM WINDOW SWITCH
MD	SECURITY ALARM MOTION DETECTOR
✳	SECURITY CAMERA ✳ CCTV- CLOSED CIRCUIT TV CAMERA PTZ- PAN, TILT, ZOOM CAMERA LENS CONTROLS
GB	GLASS BREAK DETECTOR
ACP	ACCESS CONTROL PANEL
FIRE ALARM SYSTEMS	
FACP	FIRE ALARM CONTROL PANEL
SD ✳	SMOKE DETECTOR ✳: D- DENOTES DUCT SMOKE DETECTOR R- DENOTES FIXED TEMPERATURE RATE-OF-RISE TYPE.
F	FIRE ALARM MANUAL PULL STATION, MOUNT AT 4'-0"
✳	ALARM HORN, MOUNT AT 7'-6" ✳: F- DENOTES FIRE ALARM
✳	ALARM STROBE, MOUNT AT 6'-8" ✳: F- DENOTES FIRE ALARM
✳	ALARM HORN AND STROBE LIGHT COMBINATION, MOUNT AT 6'-8" ✳: F- DENOTES FIRE ALARM

ABBREVIATIONS	
AC	ALTERNATING CURRENT
AFD	ADJUSTABLE FREQUENCY DRIVE
AFF	ABOVE FINISHED FLOOR
AG	ABOVE GRADE
ALUM	ALUMINUM
AMP/A	AMPERE
ATS	AUTOMATIC TRANSFER SWITCH
AUTO	AUTOMATIC
AUX	AUXILIARY
AWG	AMERICAN WIRE GAUGE
C	CONDUIT
CB	CIRCUIT BREAKER
CKT	CIRCUIT
CLF	CURRENT LIMITING FUSE
CP	CONTROL PANEL
CPT	CONTROL POWER TRANSFORMER
CR	CONTROL RELAY
CS	CONTROL SWITCH
CT	CURRENT TRANSFORMER
CU	COPPER
DC	DIRECT CURRENT
DI	DOOR INTERLOCK
DN	DOWN
DWG	DRAWING
EHH	ELECTRICAL HANDHOLE
EC	EMPTY CONDUIT
ELEC	ELECTRICAL
ELEV	ELEVATION
EM	EMERGENCY
EMH	ELECTRICAL MANHOLE
EO	ELECTRICALLY OPERATED
ERMS	ENERGY-REDUCING MAINTENANCE SWITCH
FBO	FURNISHED BY OTHERS
FO	FIBER OPTIC
FRP	FIBERGLASS REINFORCED POLYESTER
FU	FUSE
GCP	GENERATOR CONTROL PANEL
GEN	GENERATOR
G, GRD	GROUND
GFI	GROUND FAULT INTERRUPTER
GFCI	GROUND FAULT CIRCUIT INTERRUPTER
GO	GATE OPERATOR
GRS	GALVANIZED RIGID STEEL
HH	HANDHOLE
HT	HEIGHT
HTP	HEAT TRACE PANEL
HZ	HERTZ
IMH	INSTRUMENT MAN HOLE
INST	INSTRUMENT
LA	LIGHTNING ARRESTER
LC	LIGHTNING CONTACTOR
LCP	LOCAL CONTROL PANEL
LGTS	LIGHTS
LP	LIGHTING PANEL
	CONTINUED ABOVE RIGHT

	CONTINUED BELOW LEFT
LSIG	LONG TIME/SHORT TIME/ INSTANTANEOUS/GROUND FAULT FEATURE INCLUDED
MCC	MOTOR CONTROL CENTER
MCP	MOTOR CIRCUIT PROTECTOR
MFR	MANUFACTURER
MH	MANHOLE
MLO	MAIN LUGS ONLY
MTG	MOUNTING
MTD	MOUNTED
MTS	MANUAL TRANSFER SWITCH
NC	NORMALLY CLOSED
NEC	NATIONAL ELECTRICAL CODE
NO	NORMALLY OPEN OR NUMBER
NTS	NOT TO SCALE
OL	OVERLOAD
OLX	OVERLOAD CONTROL RELAY
PB	PUSH BUTTON OR PULL BOX
PCC	PUMP CONTROL CONSOLE
PPR	PHASE PROTECTIVE RELAY
PPU	PERPETUAL POWER UNIT
PFR	PHASE FAILURE RELAY
PH	PHASE
PNLBD	PANELBOARD
PR	PAIR
PT	POTENTIAL TRANSFORMER
PTT	PUSH TO TEST TYPE
PVC	POLYVINYL CHLORIDE
QTY	QUANTITY
RCP	RELAY CONTROL PANEL
RECP	RECEPTACLES
RVSS	REDUCED VOLTAGE SOFT STARTER
SC	SURGE CAPACITOR
SCH	SCHEMATIC
SCCR	SHORT CIRCUIT CURRENT RATING
SEC	SECONDS OR SECONDARY
SH	SHIELDED OR SHEET
SHT	SHEET
SM	MOTOR RATED SWITCH
SN	SOLID NEUTRAL
SS	STAINLESS STEEL
ST	STARTER
SV	SOLENOID VALVE
SW	SWITCH
SWBD	SWITCHBOARD
SWGR	SWITCHGEAR
TC	TERMINATION CABINET
TEL	TELEPHONE
TO	TIME DELAY ON OPENING
TS	TEMPERATURE SWITCH
TVSS	TRANSIENT VOLTAGE SURGE SUPPRESSOR
TSW	TWISTED SHIELDED WIRE
TYP	TYPICAL
UG	UNDERGROUND
V	VOLTS
VFD	VARIABLE FREQUENCY DRIVE
VO	VALVE OPERATOR
W	WIRE
WP	WEATHERPROOF
XP	EXPLOSION PROOF
XFMR	TRANSFORMER

GENERAL NOTE

THIS IS A STANDARD LEGEND. SOME SYMBOLS MAY NOT APPEAR ON THE DRAWINGS.

NO.	DATE	REVISION	APP.
	MM/DD/YY	BRIEF DESCRIPTION	XXX
	MM/DD/YY	BRIEF DESCRIPTION	XXX
	MM/DD/YY	BRIEF DESCRIPTION	XXX

TPS A TETRA TECH COMPANY
Texas PE Firm Reg. #F-929
575 N. Dairy Ashford, Suite 700, Houston, Texas 77079
T +1 281 589 7257
E usinfrastructure@rpsgroup.com

SURVEYED BY:
FB NO. F-4578

FOR INTERIM REVIEW ONLY NOT INTENDED FOR PERMIT, BIDDING OR CONSTRUCTION PURPOSES.
ENGINEER:
HOSS FOROUZAN
P.E. SERIAL NO.77748
09/08/2026

CITY OF HOUSTON
HOUSTON PUBLIC WORKS

RECONSTRUCTION & REHABILITATION
COH LIFT STATIONS

ELECTRICAL LEGENDS & SYMBOLS–II

WBS NUMBER	FOR CITY OF HOUSTON USE ONLY
R–000267–00178–3	
DRAWING SCALE	
AS NOTED	
CITY OF HOUSTON PM	
TAHA LOTIA	
SHEET NO. 139 OF 147	

STD–E–2

PLOTTED: 9/8/2026 4:48 PM
FILE PATH: O:\H8109_Lift Station Rehabilitation And Reconstruction (Tetratech)\6 Drawings\Electrical\Working\Package No.1\General\H8109_GP03.dwg STYLE: GAI.ctb

LUMINAIRE SCHEDULE

FIXTURE TYPE	VOLTAGE	LAMP TYPE	TOTAL INPUT WATTS	TOTAL OUTPUT LUMENS	MOUNT	DESCRIPTION	MAKE/MODEL
A	120/277V UNIVERSAL DRIVER	LED	42	4000	SUSPENDED	LINEAR LED LUMINAIRE, UV-STABILIZED, INJECTION-MOLDED, IMPACT-RESISTANT, FROSTED POLYCARBONATE HOUSING, -29°C TO 40°C OPERATING TEMPERATURE, 4000K COLOR TEMPERATURE, 80CRI, UV-STABILIZED, INJECTION-MOLDED, IMPACT-RESISTANT CLEAR POLYCARBONATE LENS, UL 1598 WET LOCATION LISTED.	LITHONIA ARCHWAY VAP LED SERIES VAP-4000L-PCL-WD-MVOLT-40K-80CRI-VAPCMB DAY-BRITE CFI VAPORLUME LED V2 V2WPB70L840-4-UNV TBK OR WBK ACESSORY & FKR-126
B	120/277V UNIVERSAL DRIVER	LED	13	---	STEM MOUNT	RED POLYCARBONATE LENS SUITABLE FOR WET LOCATIONS - 120V, SERIES 105 XBR	---
C	120/277V UNIVERSAL DRIVER WITH EMERGENCY BATTERY PACK WITH PHOTO CELL	LED	12	1500	WALL	POWDER COATED DIE-CAST ALUMINUM HOUSING, NATURAL ALUMINUM FINISH, -30°C TO 40°C OPERATING TEMPERATURE, 4000K COLOR TEMPERATURE, 70CRI, GASKETED LENS, IESNA TYPE III DISTRIBUTION, NEMA 4X RATED, WET LOCATION RATED, WITH EMERGENCY BATTERY PACK.	LITHONIA LIGHTING WST LED SERIES WST LED P1 40K VF MVOLT E20WC GARDCO LED WALL SCONCE 101L SERIES 101L-16L-530-NW-G1-3-EBPC-UNV-MGY
D	120/277V UNIVERSAL DRIVER	LED	70	-	POLE MOUNT	HIGH EFFICIENCY LED UNIT WITH UL LISTED FOR WET LOCATION	LITHONIA LIGHTING D-SERIES SIZE 1 DSX1 LED P2 50K T4M MVOLT RPA DDBXD OR EQUAL
E	120/277V UNIVERSAL DRIVER WITH EMERGENCY BATTERY PACK	LED	1.2	536	WALL 8-FT ABOVE FLOOR	LED STANDBY EMERGENCY LUMINAIRE, WHITE ENGINEERING GRADE THERMOPLASTIC HOUSING, 16°C TO 32°C OPERATING TEMPERATURE, IMPACT RESISTANT, CORROSION-PROOF, DAMP LOCATION RATED, EMERGENCY BATTERY PACK INCLUDED.	LITHONIA ELM6 LED SERIES LV-S-W1R-120/277-EL-N-UM-DL
F	MVOLT (120/277 UNIVERSAL DRIVER)	LED	30	-	STANCHION MOUNT	BODY MOUNTING MODULES AND GUARD-COPPER-FREE AL WITH CORRO-FREE EPOXY POWDER COAT. SUITABLE FOR CLASS I, DIVISION I HAZARDOUS LOCATIONS.	CROUSE-HINDS EV LED J4C701
X	120/277V UNIVERSAL DRIVER WITH EMERGENCY BATTERY PACK	LED	18.2	N/A	UNIVERSAL	EMERGENCY EXIT SIGN, CAST-ALUMINUM, NEMA-4X, CLEAR UV-STABLE POLYCARBONATE COVER, SINGLE WHITE POLYCARBONATE, FACEPLATE WITH DIRECTIONAL CHEVRON KNOCKOUTS. WHITE HOUSING, UNIVERSAL MOUNT, SEALED MAINTENANCE-FREE NICKEL CADMIUM BATTERY WITH 90 MINUTE CAPACITY.	LITHONIA LIGHTING LV EL N LED SERIES LV-S-W-2-R-120/277-EL N-UM-4X
TPA	N/A	N/A	N/A	N/A	BASE MOUNTED POLE	ROUND STRAIGHT ALUMINUM POLE, 4" DIAMETER WITH 2-3/8" TENON, 8' POLE WITH LOW PROFILE BASE COVER, HANDHOLE WITH RECESSED COVER. RATED FOR 150 MPH. MATCH TENON TO LUMINAIRE TYPE.	LITHONIA LIGHTING FLORIDA RATED POLE RSALP 8 4C T20 VD DNA
TPB	N/A	N/A	N/A	N/A	BASE MOUNTED POLE	ROUND STRAIGHT ALUMINUM POLE, 5" DIAMETER WITH 2-3/8" TENON, 16' POLE WITH LOW PROFILE BASE COVER, HANDHOLE WITH RECESSED COVER. RATED FOR 150 MPH. MATCH TENON TO LUMINAIRE TYPE.	LITHONIA LIGHTING FLORIDA RATED POLE RSALP 16 5C T20 VD DNA

NO.	DATE	REVISION	BRIEF DESCRIPTION	APP.
	MM/DD/YY	BRIEF DESCRIPTION	XXX	
	MM/DD/YY	BRIEF DESCRIPTION	XXX	
	MM/DD/YY	BRIEF DESCRIPTION	XXX	

Texas PE Firm Reg. #F-929
575 N. Dairy Ashford, Suite 700,
Houston, Texas 77079
T +1 281 589 7257
E usinfrastructure@rpsgroup.com

SURVEYED BY:
FB NO. F-4578

FOR INTERIM REVIEW ONLY NOT INTENDED FOR PERMIT, BIDDING OR CONSTRUCTION PURPOSES.
ENGINEER:
HOSS FOROUZAN
P.E. SERIAL NO.77748
09/08/2026

CITY OF HOUSTON
HOUSTON PUBLIC WORKS

RECONSTRUCTION & REHABILITATION
COH LIFT STATIONS

ELECTRICAL LIGHTING SCHEDULE

WBS NUMBER	FOR CITY OF HOUSTON USE ONLY
R-000267-00178-3	
DRAWING SCALE	
AS NOTED	
CITY OF HOUSTON PM	
TAHA LOTIA	
SHEET NO. 140 OF 147	

STD-E-3

PLOTTED: 9/8/2026 4:48 PM
FILE PATH: O:\H8109_Lift Station Rehabilitation And Reconstruction (Tetratech)\6 Drawings\Electrical\Working\Package No.1\General\H8109_G-P001.dwg STYLE: GAI.ctb

ELECTRICAL GENERAL NOTES

1. THE NOTES CONTAINED ON THIS SHEET ARE PROVIDED FOR THE CONVENIENCE OF THE CONTRACTOR WHEN WORKING IN THE FIELD, AND CONTAIN EXCERPTS FROM THE SPECIFICATION SECTIONS. HOWEVER THE CONTRACTOR IS HEREBY ADVISED THAT THE CONTRACT DOCUMENTS CONSIST OF BOTH THE DRAWINGS AND THE SPECIFICATIONS, AND THAT THE CONTRACTOR MUST COMPLY FULLY WITH BOTH THE BOUND DRAWINGS AND THE BOUND SPECIFICATIONS.

2. ALL EQUIPMENT WIRING, RACEWAYS, ETC. SHALL BE INSTALLED AND GROUNDED IN ACCORDANCE WITH THE LATEST EDITION OF THE NATIONAL ELECTRICAL CODE, LOCAL CODES, AND INDUSTRY STANDARDS (IE. UL, NEMA, IEEE, ANSI, ETC.) THE DRAWING NOTES AND DETAILS SHALL BE COMPLIED WITH IN ADDITION TO THE REQUIREMENTS IN THE SPECIFICATIONS. REFER TO EACH SPECIFICATION SECTION FOR SPECIFIC REQUIREMENTS.

3. ALL RACEWAY INSTALLATIONS SHALL BE INSTALLED IN A MANNER TO PREVENT CONFLICTS WITH EQUIPMENT AND STRUCTURAL CONDITIONS. ALL EXPOSED RACEWAY SHALL BE INSTALLED PARALLEL TO BEAMS, CEILINGS, FLOORS AND WALLS. SEE SPECIFICATION ON RACEWAYS FOR ADDITIONAL REQUIREMENTS.

4. CONDUITS SHALL BE TERMINATED IN A NEAT MANNER AND STRICTLY IN ACCORDANCE WITH THE SPECIFICATIONS AND DRAWING DETAILS.

5. CONDUITS TERMINATED INTO ENCLOSURES SHALL BE PERPENDICULAR TO THE WALLS OF THE ENCLOSURE. THE USE OF SHORT SEALTIGHT ELBOW FITTINGS FOR SUCH TERMINATIONS IS NOT PERMITTED.

6. ALL RACEWAY INSTALLATIONS, CROSSING EXPANSION JOINTS OR TRANSITIONS FROM BELOW GRADE TO EXPOSED ABOVE GRADE, SHALL HAVE EXPANSION OR EXPANSION/DEFLECTION TYPE FITTINGS AS SPECIFIED FOR THE APPLICATION. SEE THE DRAWINGS AND THE SPECIFICATION ON RACEWAYS FOR THE EXACT TYPE OF FITTING TO BE USED.

7. NO CONDUIT SMALLER THAN 3/4", NOR WIRE SMALLER THAN NO. 12 AWG, SHALL BE USED UNLESS SPECIFICALLY NOTED.

8. ALL UNDERGROUND SINGLE CONDUITS AND DUCTBANKS OF MULTIPLE CONDUITS SHALL BE RIGID PVC CONDUIT ENCASED IN REINFORCED RED CONCRETE. CONCRETE DYED RED BEFORE PLACEMENT. MINIMUM SIZE IS 2 INCH. FIELD VERIFY THE ROUTING OF ALL EXISTING UNDERGROUND CONDUIT AND DUCTBANKS. COORDINATE ROUTING OF NEW CONDUIT AND DUCTBANKS TO AVOID INTERFERENCE WITH EXISTING CONDUIT, DUCTBANKS, AND OTHER UNDERGROUND UTILITIES.

9. ALL CHANGES OF DIRECTION GREATER THAN 20 DEGREES IN UNDERGROUND SINGLE, OR DUCTBANKS OF MULTIPLE CONDUITS, SHALL BE ACCOMPLISHED USING PVC COATED RIGID ALUMINUM LONG RADIUS BENDS. BENDS OF PVC CONDUIT GREATER THAN 20 DEGREES, OR THE USE OF FLEXIBLE CONDUIT OF ANY TYPE, WILL NOT BE PERMITTED. SEE THE SPECIFICATIONS FOR MORE REQUIREMENTS.

10. LIQUID TIGHT FLEXIBLE ALUMINUM CONDUIT SHALL BE USED FOR THE PRIMARY AND SECONDARY OF TRANSFORMERS, GENERATOR TERMINATIONS AND OTHER EQUIPMENT WHERE VIBRATION IS PRESENT. USE IN OTHER LOCATIONS IS NOT PERMITTED, EXCEPT FOR CONNECTIONS TO INSTRUMENTATION TRANSMITTERS, WHERE MULTIPLE PENETRATIONS ARE REQUIRED. LIQUID TIGHT FLEXIBLE ALUMINUM CONDUIT SHALL HAVE A MAXIMUM LENGTH NOT GREATER THAN THAT OF A FACTORY MANUFACTURED LONG RADIUS ELBOW OF THE CONDUIT SIZE BEING USED. THE MAXIMUM BENDING RADIUS SHALL NOT BE LESS THAN THAT SHOWN IN THE NEC CHAPTER 9, TABLE 2, "OTHER BENDS". BX OR AC TYPE PREFABRICATED CABLES WILL NOT BE PERMITTED.

11. THE WIRING DIAGRAMS, BLOCK DIAGRAMS, QUANTITY/SIZES OF WIRES/CONDUITS REPRESENT A SUGGESTED ARRANGEMENT BASED UPON SELECTED STANDARD COMPONENTS OF ELECTRICAL EQUIPMENT. MODIFICATIONS ACCEPTABLE TO THE ENGINEER MAY BE MADE BY THE CONTRACTOR TO ACCOMMODATE EQUIPMENT ACTUALLY APPROVED. ALL MODIFICATIONS SHALL BE SUBMITTED TO THE ENGINEER FOR APPROVAL. THE BASIC SEQUENCE AND METHOD OF CONTROL MUST BE MAINTAINED AS INDICATED ON THE DRAWINGS AND/OR SPECIFIED.

12. ALL JUNCTION BOXES, PULL BOXES AND TERMINATION BOXES IN NEMA 12 AREAS SHALL BE ALUMINUM. FOR NEMA 4X AREAS SEE SPECIFICATIONS FOR BOX DETAILS AND SPECIFICATIONS.

13. SEAL ALL RACEWAYS ENTERING JUNCTION BOXES OR CONTROL PANELS CONTAINING ELECTRICAL OR INSTRUMENTATION EQUIPMENT WITH WATERTIGHT SEALANT. REFER TO THE SPECIFICATIONS FOR DETAILS.

14. ALL EQUIPMENT AND ELECTRICAL EQUIPMENT ENCLOSURE LOCATIONS, OR TERMINAL BOX LOCATIONS, ARE APPROXIMATE. THE EXACT LOCATIONS SHALL BE COORDINATED WITH AND APPROVED BY THE OWNER/ENGINEER, DURING CONSTRUCTION, AT NO ADDITIONAL COST TO THE OWNER.

15. ALL EQUIPMENT AND ELECTRICAL EQUIPMENT ENCLOSURES DIMENSIONS ARE APPROXIMATE. ALL EQUIPMENT AND ELECTRICAL EQUIPMENT ENCLOSURES OR TERMINAL BOX DIMENSIONS SHALL BE VERIFIED WITH THE EQUIPMENT SUPPLIER. ALLOW FOR LOCATION CHANGES AND INCLUDE IN THE CONTRACT PRICE. THE EXACT LOCATIONS OF ALL ELECTRICAL EQUIPMENT AND ROUTING OF ALL CABLES AND CONDUITS SHALL BE COORDINATED WITH AND APPROVED BY THE OWNER/ENGINEER DURING CONSTRUCTION.

16. CORING OF AN EXISTING STRUCTURE SHALL BE COORDINATED WITH AND APPROVED BY THE OWNER/ENGINEER. CORING THROUGH STRUCTURAL BEAMS IS STRICTLY PROHIBITED WITHOUT PRIOR WRITTEN APPROVAL FROM THE OWNER/ENGINEER.

17. THE LOCATION OF ALL ELECTRICAL EQUIPMENT AND ROUTING OF CABLES AND CONDUITS SHALL BE COORDINATED AND APPROVED BY THE OWNER.

18. THE DUCTBANK ROUTING AS SHOWN ON THE DRAWING IS APPROXIMATE. FIELD VERIFY THE EXACT DUCTBANK ROUTING, CABLE LENGTH AND CONDUIT LENGTH.

19. PROVIDE CONDUIT SEALS FOR CONDUIT PENETRATIONS AS PER NEC AND NFPA820.

20. COORDINATE ALL WORK WITH THE OWNER.

21. LOCATE ALL UNDERGROUND UTILITIES BEFORE DIGGING. COORDINATE THE EFFORT WITH THE OWNER.

22. ALL SLOTTED CHANNEL, SLOTTED CHANNEL SUPPORT MATERIAL, WASHERS, SCREWS, NUTS, CONDUIT CLAMPS, ALL THREAD SPRING NUTS AND MISC. MOUNTING HARDWARE SHALL BE 316 STAINLESS STEEL.

23. LIGHTING FIXTURES SHALL BE MOUNTED ACCORDING TO THE MOUNTING HEIGHT GIVEN ON THE DRAWINGS. THE MOUNTING HEIGHT SHALL BE MEASURED FROM THE BOTTOM OF THE LIGHTING FIXTURE TO THE FINISHED FLOOR.

24. CONDUIT AND WIRE FOR THE HVAC EQUIPMENT AND MISCELLANEOUS DEVICES SHALL BE:

    A. 3/4" (MIN) RIGID ALUMINUM.

    B. NO.14 XHHW CU. WIRE XHHW (MIN.).

    C. IN ACCORDANCE WITH ALL ELECTRICAL AND HVAC SPECIFICATIONS REQUIREMENTS.

25. CONDUITS AND WIRES SHOWN ON THE INTERFACE DIAGRAM SHALL BE INSTALLED BY THE CONTRACTOR. GROUPING OF CONDUIT AND WIRE MAY BE CHANGED, IF APPROVED BY THE ENGINEER AND OWNER.

26. ALL CONDULETS SHALL BE FORM 7 AND SHALL HAVE 316 SS CLAMP COVERS WITH 316 SS CLAMPS AND SCREWS. SCREW DOWN COVERS ARE UNACCEPTABLE. REFER TO THE SPECIFICATIONS FOR MORE INFORMATION.

27. ALL UNDERGROUND GROUNDING CONDUCTORS SHALL BE BARE TIN-PLATED COPPER, ALL GROUND RODS SHALL BE 3/4" BY 10' LONG. ALL EXPOSED COPPER GROUND CABLES SHALL BE GREEN INSULATED CONDUCTORS. PROVIDE XHHW INSULATION.

28. WHERE NOTES ON THE DRAWING INDICATE THAT THE CONTRACTOR SHALL FIELD-VERIFY, THE INTENT IS FOR THE CONTRACTOR TO INVESTIGATE TO THE EXTENT NECESSARY TO PROVIDE THE WORK AND MATERIALS PRIOR TO BIDDING AND INCLUDE ALL COSTS IN THE BID PRICE. THE CONTRACT PRICE SHALL NOT BE INCREASED WHEN THE CONTRACTOR HAS NOT INVESTIGATED PER THE NOTES DIRECTING THAT BE DONE.

29. REFER TO SPECIFICATION SECTION 16110 RACEWAYS BOXES ENCLOSURES AND FITTINGS FOR INSTALLATION REQUIREMENTS.

TYPICAL ENCLOSURE TYPES BY AREA

NON-HAZARDOUS AREAS	BOXES & ENCLOSURES 1	3R	4X	4X*	12	
OUTDOOR; GENERAL AREAS		X	X			
OUTDOOR; CHEMICAL AREAS				X		
INDOOR; CHEMICAL ROOM				X		
INDOOR; CONDITIONED SPACE					X	
INDOOR; NON-CONDITIONED SHOP SPACE					X	
INDOOR; NON-CONDITIONED PROCESS AREA			X			
INDOOR, ADMIN BUILDING	X					
CLASS I, DIVISION 1	REFER TO NEC, NFPA-820, AND CONTRACT CONSTRUCTION SPECIFICATIONS					
CLASS I, DIVISION 2	REFER TO NEC, NFPA-820, AND CONTRACT CONSTRUCTION SPECIFICATIONS					

GENERAL NOTES:

- EQUIPMENT SUCH AS MOTOR CONTROL CENTER, SWITCHGEAR, VFDS, AND OTHER STAND-ALONE MOTOR STARTERS ARE TO BE SPECIFIED UNIQUELY.
- NEMA 1 ENCLOSURES ARE TO BE NEMA 1 GASKETED.
- NEMA 4X* ENCLOSURES ARE TO BE NON-METALLIC (ie PVC) NEMA 4X
- OUTDOOR GENERAL AREAS COULD BE 3R OR 4X DEPENDING ON OWNER PREFERENCE AND WHETHER WTP OR WWTP - REFER TO DRAWINGS.

CONDUIT TYPE	LOCATION
RIGID GALVANIZED CONDUIT	NOT ACCEPTABLE FOR USE ON THIS PROJECT EXCEPT FOR THE UTILITY COMPANY'S CONDUCTORS. ALL UTILITY COMPANY'S DUCTS SHALL BE AS SPECIFIED BY UTILITY COMPANY.
PVC COATED ALUMINUM CONDUIT	ALL EMBEDDED CONDUIT BENDS, UNDERGROUND DUCTBANK OF MORE THAN 20 DEGREES, AND ALL CONDUIT STUB-UPS TO A MINIMUM OF 6" ABOVE FINISHED FLOOR OR GRADE AND IN CHLORINE AND CAUSTIC ROOMS.
LIQUID TIGHT FLEXIBLE ALUMINUM CONDUIT	RACEWAY CONNECTION TO VIBRATING EQUIPMENT ONLY, IN ALL AREAS.
RIGID NON-METALLIC, SCHEDULE 40 PVC CONDUIT	UNDERGROUND ENCASED IN RED DYE REINFORCED CONCRETE. (AS WHERE SPECIFIED)
RIGID NON-METALLIC, SCHEDULE 80 PVC CONDUIT	FOR USE IN CHLORINE AND CAUSTIC ROOMS, AND UNDERGROUND. ENCASED IN RED DYED REINFORCED CONCRETE. (AS WHERE SPECIFIED)
FLEXIBLE ALUMINUM CONDUIT	FIXTURE WHIP CONNECTION TO LIGHTING FIXTURES IN NEMA 12 AREAS (MAXIMUM 3-FT). BX OR AC TYPE PREFABRICATED CABLES ARE NOT PERMITTED.
ALUMINUM RIGID METAL CONDUIT	ALL ABOVE GRADE AREAS, EXCEPT FOR CONCRETE EMBEDDED AND THOSE AREAS ALREADY DESCRIBED IN THIS TABLE
ELECTRIC METALLIC TUBING (EMT) CONDUIT	FOR USE ONLY ON CONCEALED, ABOVE GROUND, INTERIOR ELECTRICAL WIRING IN AIR-CONDITIONED BUILDINGS.

*REFER TO DESIGN GUIDE LINE SPECIFICATIONS.

DEMOLITION NOTES

1. COORDINATE THE DEMOLITION OF ELECTRICAL CONDUIT, WIRE, EQUIPMENT AND DEVICES WITH THE GENERAL DEMOLITION AND SCHEDULE. THE DRAWINGS ARE INTENDED TO CONVEY THE GENERAL NATURE AND SCOPE OF THE DEMOLITION WORK. EVERY ITEM TO BE DEMOLISHED MAY NOT BE SHOWN. FIELD VERIFY, AND INCLUDE ALL DEMOLITION WORK IN THE CONTRACT PRICE.

2. PROVIDE TEMPORARY WIRE AND CONDUIT FOR THE EQUIPMENT WHICH MAY BE AFFECTED BY THE DEMOLITION BUT TO REMAIN IN SERVICE.

3. RELOCATE AND RECONNECT POWER AND CONTROL RACEWAYS AND CONDUCTORS TO EQUIPMENT AFFECTED BY DEMOLITION WORK.

4. ALL CONDUCTORS BEING DEMOLISHED SHALL BE DISCONNECTED AND REMOVED FROM THE LOAD TO THE SOURCE. SURFACE MOUNTED CONDUITS AND MOUNTING HARDWARE SHALL BE REMOVED. UNDERGROUND CONDUITS WHICH ARE NOT BEING REMOVED OR OTHERWISE NOT BEING MADE UNUSABLE SHALL BE CAPPED AND TAGGED AS SPARE, WITH INFORMATION CLEARLY INDICATING THE LOCATION OF THE OTHER END.

5. ALL SURFACES WHERE DEMOLISHED EQUIPMENT OR CONDUIT IS REMOVED SHALL BE CLEANED, PATCHED AND PAINTED TO MATCH THE SURROUNDING SURFACE.

6. CHECK THE FUNCTION OF EACH CONDUCTOR BEFORE REMOVING OR DISCONNECTING.

7. IF A CONDUCTOR WHICH HAS TO STAY IN SERVICE (NOT BEING DEMOLISHED) IS INSTALLED IN A COMMON CONDUIT WITH CONDUCTORS WHICH ARE BEING DEMOLISHED, THE CONTRACTOR SHALL REMOVE ALL CONDUCTORS FROM THE CONDUIT, PROVIDE NEW CONDUCTORS WHICH ARE REPLACEMENTS FOR THE CONDUCTORS THAT ARE TO REMAIN IN SERVICE AND RE-INSTALL THE NEW CONDUCTORS. AFTER THE CONDUCTORS ARE PULLED, MEGGER OR VFL TEST EACH CONDUCTOR. CONNECT BOTH ENDS OF THE NEW CONDUCTORS AND TEST THE SYSTEM FOR PROPER FUNCTION. DO NOT RE-PULL USED CONDUCTORS UNLESS SPECIFIED.

8. WHERE EQUIPMENT IS BEING RE-FED FROM A NEW SOURCE, EXISTING CONDUIT MAY BE REUSED ONLY IF THE CONDUIT AND FITTINGS ARE OF THE TYPE SPECIFIED FOR NEW WORK ON THIS CONTRACT. IF NOT, THE CONDUIT AND CONDUCTORS SHALL BE REPLACED WITH NEW MATERIAL MEETING THE SPECIFICATIONS, AT NO ADDITIONAL COST TO THE OWNER.

9. THE CONTRACTOR SHALL COORDINATE WITH THE OWNER/ENGINEER TO FLAG EXISTING UNDERGROUND CONDUITS BEFORE DIGGING.

10. THE OWNER HAS THE RIGHT OF FIRST REFUSAL TO THE EQUIPMENT BEING REMOVED. THE CONTRACTOR SHALL DELIVER THE EQUIPMENT WHICH THE OWNER WISHES TO KEEP AT A LOCATION DESIGNATED BY THE OWNER. SEE SPECIFICATIONS.

11. DO NOT MAKE ANY MODIFICATIONS TO THE EXISTING ELECTRICAL EQUIPMENT UNTIL THE FOLLOWING HAS BEEN DONE:

    A. THE OWNER/CONTRACTOR SHALL WITNESS AND RECORD THE CONDITION OF THE EXISTING EQUIPMENT, THE CONTRACTOR SHALL NOTE DOWN ANY DEFECTS OR DEFICIENCIES.

    B. THE OWNER SHALL OPERATE THE EQUIPMENT TO DEMONSTRATE THE CURRENT CONDITIONS. THE CONTRACTOR SHALL NOTE DOWN ANY DEFECTS OR DEFICIENCIES.

    C. A WRITTEN AND PHOTOGRAPHIC RECORD OF THE OPERATION AND EXISTING CONDITION SHALL BE KEPT IN A THREE RING BINDER AT THE OWNER/CONTRACTOR TRAILER, IN FORM OF PICTURES AND INFORMATION.

    D. A FORM SHALL BE GENERATED BY THE CONTRACTOR TO RECORD THE OBSERVATIONS. BOTH PARTIES SHALL SIGN ON THE FORM.

    E. REPLACE ALL MATERIAL OR EQUIPMENT DAMAGED DURING THE COURSE OF WORK.

    F. AFTER THE CHANGES ARE MADE, THE EQUIPMENT SHALL BE INSPECTED AND RE-TESTED TO DEMONSTRATE THAT IT FUNCTIONS CORRECTLY.

    G. NO PORTION OF EXISTING CONDUCTORS SHALL BE SPLICED TO NEW CONDUCTORS FOR RE-USE WITHOUT SPECIFIC APPROVAL FROM THE OWNER/ENGINEER ON A CASE-BY-CASE BASIS.

MCC, CONTROL PANELS, PANELBOARDS

THESE NOTES APPLY TO CONTROL PANELS, MCC ETC WHICH HAS TO BE REFURBISHED, MODIFIED, DISCONNECTED & RECONNECTED OR REWORKED. SEE SPECIFICATION SECTION 16060 ELECTRICAL DEMOLITION:

THE CONTRACTOR SHALL NOT MAKE ANY MODIFICATION UNTIL THE FOLLOWING HAS BEEN DONE:

A. THE OWNER/CONTRACTOR SHALL WITNESS THE CONDITION OF THE EXISTING EQUIPMENT, THE CONTRACTOR SHALL NOTE DOWN ANY DEFECTS OR DEFICIENCY.

B. THE OWNER SHALL OPERATE THE EQUIPMENT TO DEMONSTRATE THE CURRENT CONDITIONS. THE CONTRACTOR SHALL NOTE DOWN ANY DEFECTS OR DEFICIENCIES.

C. A RECORD OF THE OPERATION AND EXISTING CONDITION SHALL BE KEPT IN A THREE RING BINDER AT THE OWNER/CONTRACTOR TRAILER, IN FORM OF PICTURES AND INFORMATION.

D. A FORM SHALL BE GENERATED BY THE CONTRACTOR TO RECORD THE OBSERVATIONS. BOTH PARTIES SHALL SIGN ON THE FORM.

E. REPLACE ALL MATERIAL OR EQUIPMENT DAMAGED DURING THE COURSE OF WORK.

F. AFTER THE CHANGES ARE MADE, THE EQUIPMENT SHALL BE INSPECTED AND RE-TESTED TO DEMONSTRATE THAT IT FUNCTIONS CORRECTLY.

NO.	DATE	REVISION	APP.
	MM/DD/YY	BRIEF DESCRIPTION	XXX
	MM/DD/YY	BRIEF DESCRIPTION	XXX
	MM/DD/YY	BRIEF DESCRIPTION	XXX

RPS A TETRA TECH COMPANY
Texas PE Firm Reg. #F-929
575 N. Dairy Ashford, Suite 700, Houston, Texas 77079
T +1 281 589 7257
E usinfrastructure@rpsgroup.com

SURVEYED BY:
FB NO. F-4578

FOR INTERIM REVIEW ONLY NOT INTENDED FOR PERMIT, BIDDING OR CONSTRUCTION PURPOSES.
ENGINEER:
HOSS FOROUZAN
P.E. SERIAL NO.77748
09/08/2026

CITY OF HOUSTON
HOUSTON PUBLIC WORKS

RECONSTRUCTION & REHABILITATION
COH LIFT STATIONS

ELECTRICAL
GENERAL NOTES

WBS NUMBER	FOR CITY OF HOUSTON USE ONLY
R-000267-00178-3	
DRAWING SCALE	
AS NOTED	
CITY OF HOUSTON PM	
TAHA LOTIA	
SHEET NO. 141 OF 147	

STD-E-4

PLOTTED: 9/8/2026 4:48 PM
FILE PATH: O:\H8109_Lift Station Rehabilitation And Reconstruction (Tetratech)\6 Drawings\Electrical\Working\Package No.1\General\H8109_GPLOT.dwg
STYLE: GAI.ctb

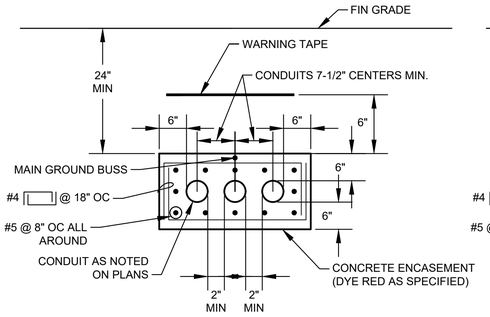

TYP MULTI-CONDUIT DUCTBANK SECTION

NOTE: TIE MAIN GROUNDING BUS TO REBAR AT A MAXIMUM INTERVAL OF EVERY 20 FEET.

DETAIL 1 / NTS

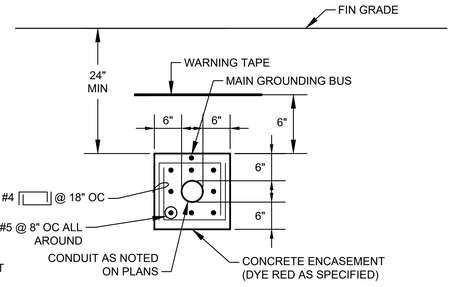

TYP SINGLE-CONDUIT DUCTBANK SECTION

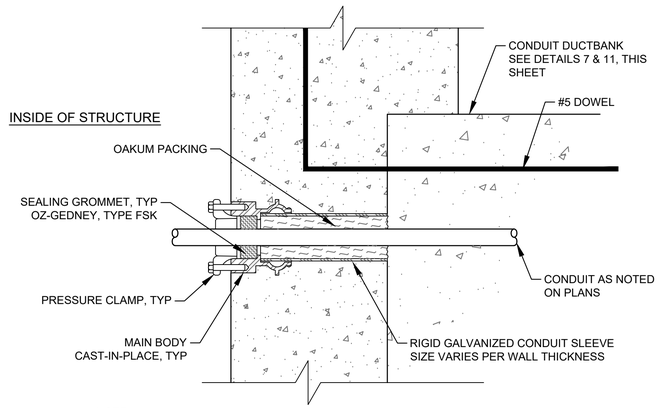

NOTE:

WALL SEAL SHOWN IS TYPICAL FOR EACH CONDUIT IN DUCTBANK.

SINGLE ENDED TYPE

FOR USE WHERE CONDUIT OUTSIDE THE STRUCTURE IS ENCASED IN CONCRETE

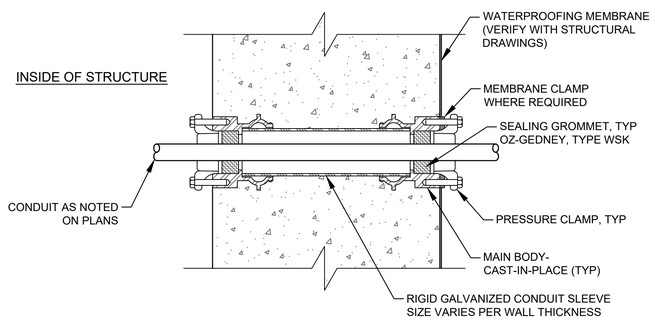

DOUBLE ENDED TYPE WITH MEMBRANE

FOR USE WHERE CONDUIT OUTSIDE THE STRUCTURE IS ENCASED IN CONCRETE

TYPICAL CONDUIT SEALS

DETAIL 4 / NTS

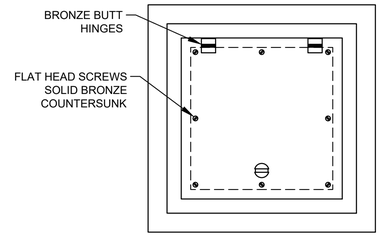

TOP PLAN

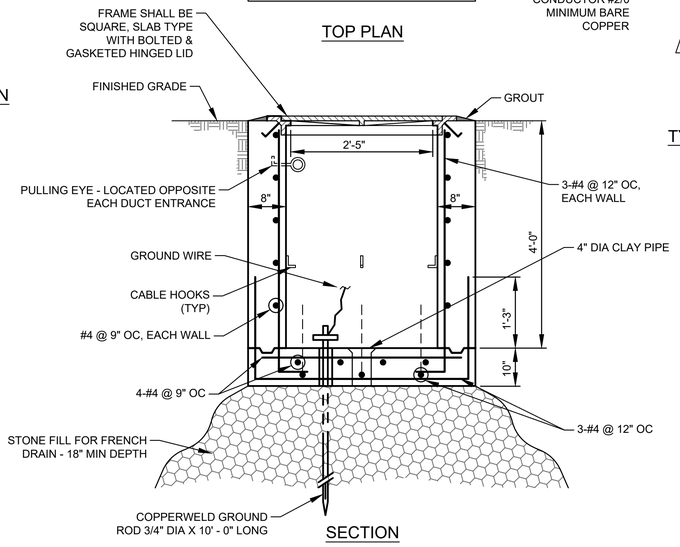

SECTION

TYPICAL ELECTRICAL HANDHOLE CONSTRUCTION

DETAIL 2 / NTS

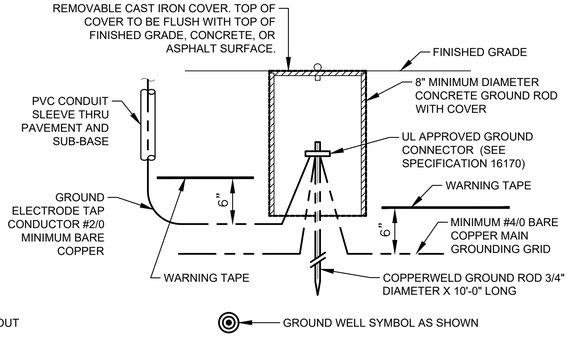

TYPICAL GROUND ROD AND WELL INSTALLATION

DETAIL 3 / NTS

GROUND CONNECTOR SCHEDULE	
WIRE SIZE	BURNDY
#2 AWG	GAR 6426
#2/0 AWG	GAR 6426
#4/0 AWG	GAR 6429
500 kcmil	GAR 6434

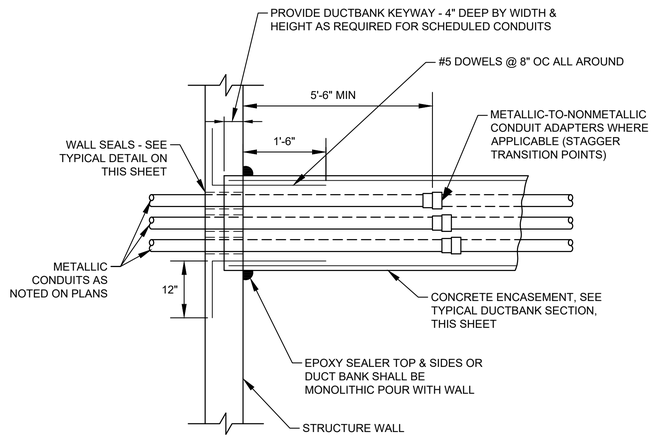

PLAN

TYPICAL DUCTBANK ENTRANCE AT STRUCTURE WALL

DETAIL 5 / NTS

NO.	DATE	REVISION	APP.
	MM/DD/YY	BRIEF DESCRIPTION	XXX
	MM/DD/YY	BRIEF DESCRIPTION	XXX
	MM/DD/YY	BRIEF DESCRIPTION	XXX

RPS A TETRA TECH COMPANY
Texas PE Firm Reg. #F-929
575 N. Dairy Ashford, Suite 700, Houston, Texas 77079
T +1 281 589 7257
E usinfrastructure@rpsgroup.com

SURVEYED BY:
FB NO. F-4578

FOR INTERIM REVIEW ONLY NOT INTENDED FOR PERMIT, BIDDING OR CONSTRUCTION PURPOSES.
ENGINEER:
HOSS FOROUZAN
P.E. SERIAL NO.77748
09/08/2026

CITY OF HOUSTON
HOUSTON PUBLIC WORKS

RECONSTRUCTION & REHABILITATION
COH LIFT STATIONS

ELECTRICAL TYPICAL DETAILS–I

WBS NUMBER	FOR CITY OF HOUSTON USE ONLY
R–000267–00178–3	
DRAWING SCALE	
AS NOTED	
CITY OF HOUSTON PM	
TAHA LOTIA	
SHEET NO. 142 OF 147	

STD–E–5

PLOTTED: 9/8/2026 4:48 PM
FILE PATH: O:\H8109_Lift Station Rehabilitation And Reconstruction (Tetratech)\6 Drawings\Electrical\Working\Package No.1\General\H8109_GP10367.STYLE: GAI.ctb

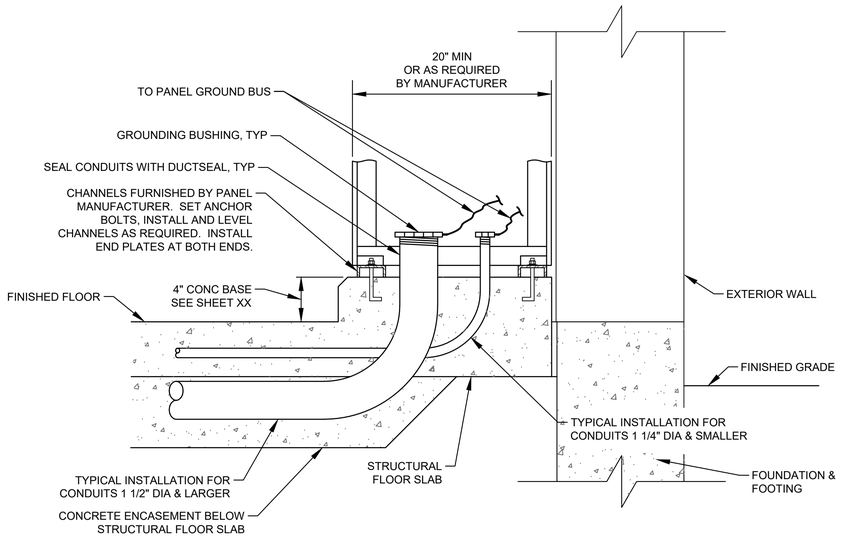

TYPICAL MCC & CONTROL PANEL INSTALLATION & CONDUIT ENTRY

DETAIL 6
NTS -

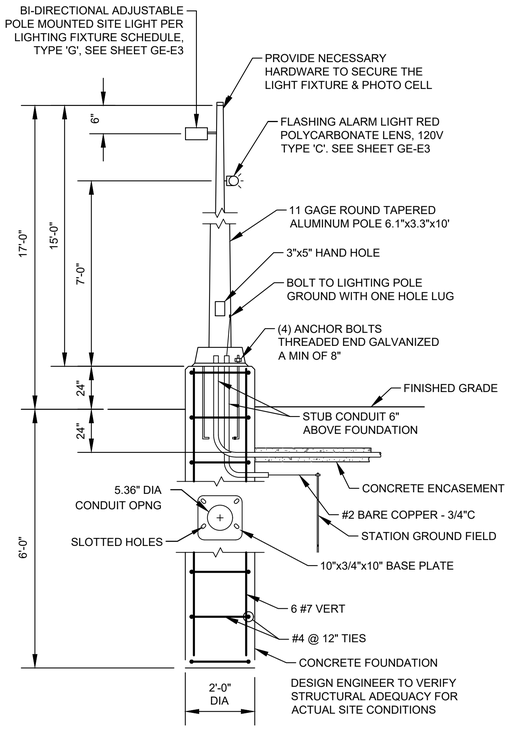

TYPICAL YARD LIGHT

DETAIL 7
NTS -

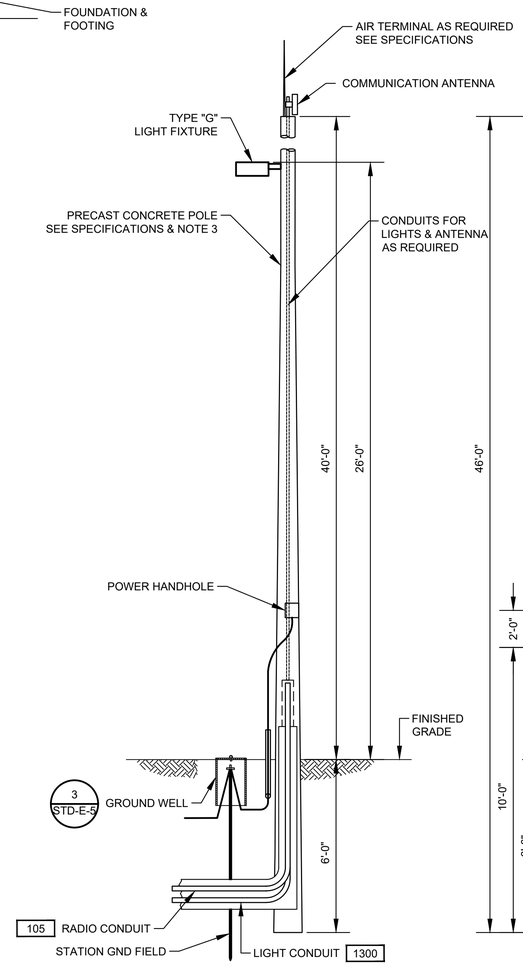

COMMUNICATION POLE MOUNTING DETAIL

DETAIL 8
NTS -

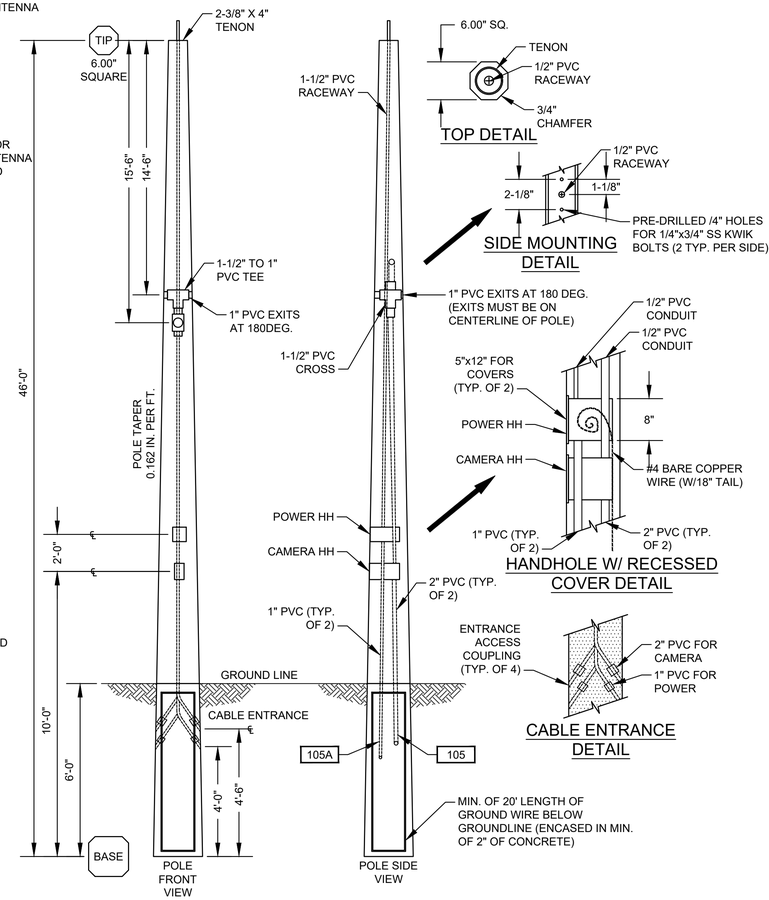

NOTES:

1. ON GROUND WIRE TERMINATION'S, ALL PAINTED OR COATED METAL SURFACES SHALL BE REMOVED AND CLEANED TO BARE METAL. TO OBTAIN A SOUND GROUND CONNECTION. ONCE INSTALLED APPLY PROTECTIVE COATING ON BARE METAL AREAS PER MANUFACTURER REQUIREMENTS.
2. PRECAST CONCRETE POLE TO MOUNT THE RADIO RECEIVER.
3. 1" CONDUIT TO EXTEND TO THE TOP OF POLE FOR ETHERNET CABLE FOR RADIO.

NO.	DATE	REVISION	APP.
	MM/DD/YY	BRIEF DESCRIPTION	XXX
	MM/DD/YY	BRIEF DESCRIPTION	XXX
	MM/DD/YY	BRIEF DESCRIPTION	XXX

RPS A TETRA TECH COMPANY
Texas PE Firm Reg. #F-929
575 N. Dairy Ashford, Suite 700, Houston, Texas 77079
T +1 281 589 7257
E usinfrastructure@rpsgroup.com

SURVEYED BY:
FB NO. F-4578

FOR INTERIM REVIEW ONLY NOT INTENDED FOR PERMIT, BIDDING OR CONSTRUCTION PURPOSES.
ENGINEER:
HOSS FOROUZAN
P.E. SERIAL NO.77748
09/08/2026

CITY OF HOUSTON
HOUSTON PUBLIC WORKS

RECONSTRUCTION & REHABILITATION
COH LIFT STATIONS

ELECTRICAL – TYPICAL DETAILS–II

WBS NUMBER	FOR CITY OF HOUSTON USE ONLY
R–000267–00178–3	
DRAWING SCALE	
AS NOTED	
CITY OF HOUSTON PM	
TAHA LOTIA	
SHEET NO. 143 OF 147	

STD–E–6

PLOTTED: 9/8/2026 4:48 PM
FILE PATH: O:\H8109_Lift Station Rehabilitation And Reconstruction (Tetratech)\6 Drawings\Electrical\Working\Package No.1\General\H8109_GP1.03.dwg STYLE: GAI.ctb

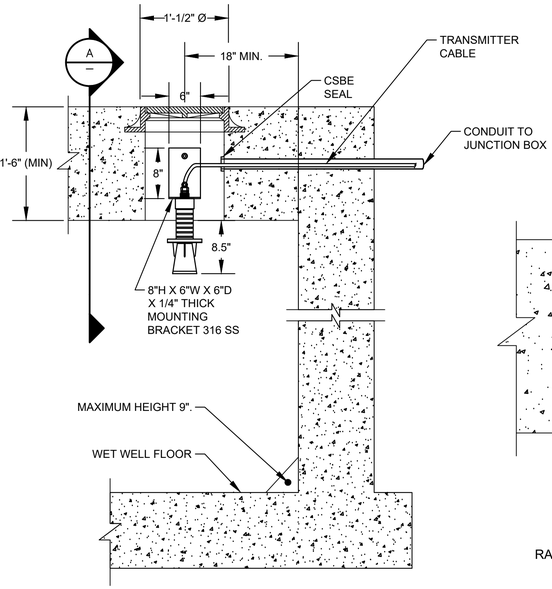

RADAR LEVEL TRANSMITTER MOUNTING
(TYP. LT-1, LT-2)

DETAIL 1
NTS
(SEE NOTE 1, 2, 4 & 5)

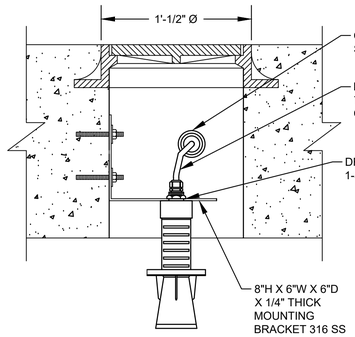

RADAR LEVEL TRANSMITTER MOUNTING
TYP. LT-1 & LT-2

SECTION A
NTS
(SEE NOTE 1, 2, 4 & 5)

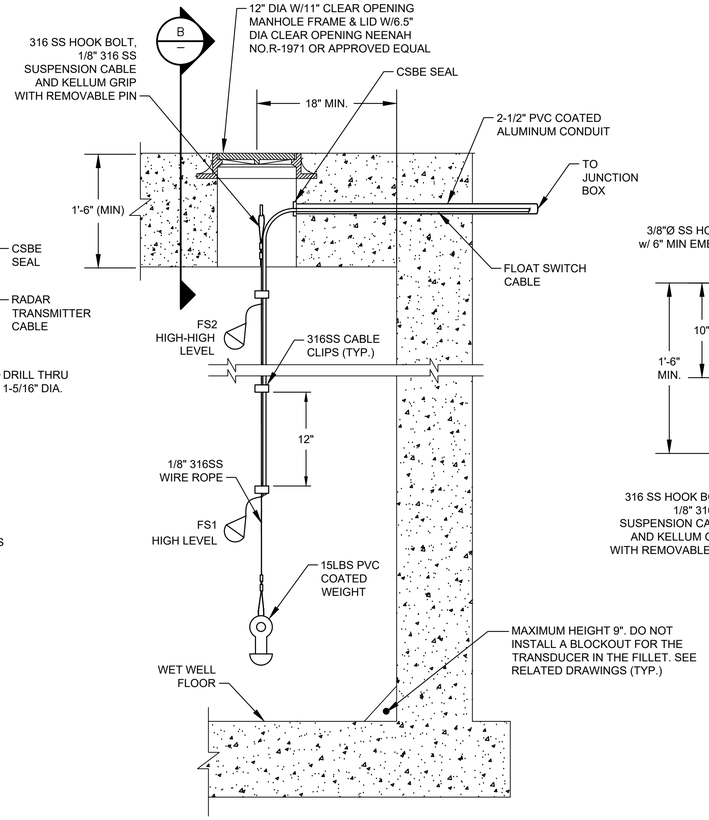

FLOAT SWITCH MOUNTING

DETAIL 2
NTS
(SEE NOTES 3, 4 & 5)

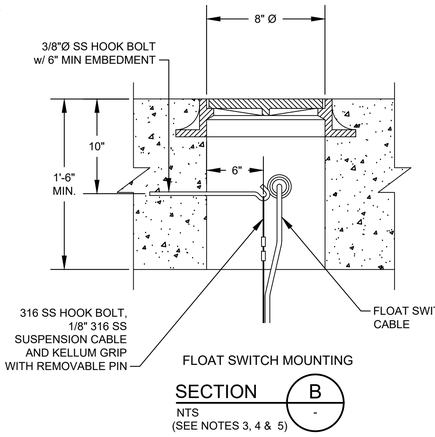

FLOAT SWITCH MOUNTING

SECTION B
NTS
(SEE NOTES 3, 4 & 5)

NOTES:

1. NEW RADAR LEVEL TRANSMITTERS FOR LT-1, LT-2.
2. NEW MANHOLES FOR RADAR LEVEL TRANSMITTERS LT-1, LT-2.
3. NEW MANHOLE FOR FLOAT SWITCHES.
4. PAINT MANHOLE LIDS AND HATCHES HUNTER GREEN.
5. NEW MANHOLE INSTALLATION.
6. RETROFIT MANHOLE INSTALLATION.

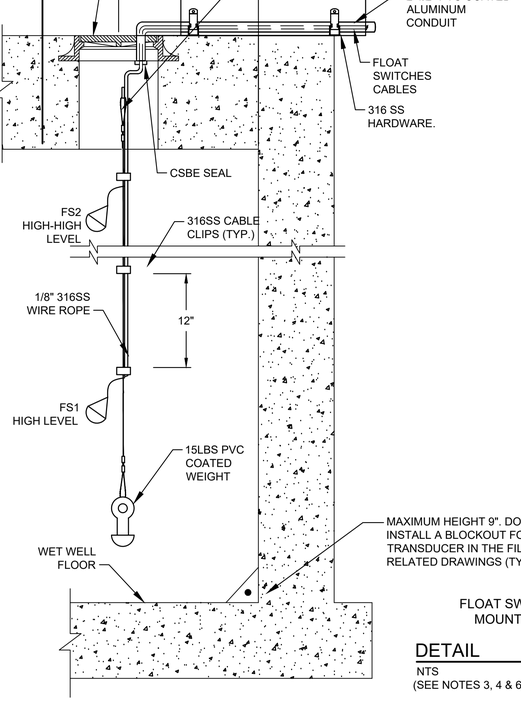

FLOAT SWITCH MOUNTING

DETAIL 3
NTS
(SEE NOTES 3, 4 & 6)

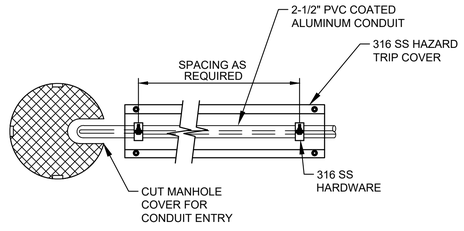

FLOAT SWITCH MOUNTING
TOP VIEW

DETAIL 4
NTS
(SEE NOTES 3, 4 & 6)

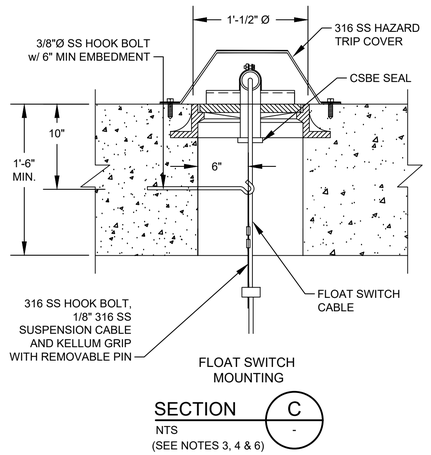

FLOAT SWITCH
MOUNTING

SECTION C
NTS
(SEE NOTES 3, 4 & 6)

NO.	DATE	REVISION	APP.
	MM/DD/YY	BRIEF DESCRIPTION	XXX
	MM/DD/YY	BRIEF DESCRIPTION	XXX
	MM/DD/YY	BRIEF DESCRIPTION	XXX

RPS
A TETRA TECH COMPANY
Texas PE Firm Reg. #F-929
575 N. Dairy Ashford, Suite 700,
Houston, Texas 77079
T +1 281 589 7257
E usinfrastructure@rpsgroup.com

SURVEYED BY:
FB NO. F-4578

FOR INTERIM REVIEW ONLY NOT INTENDED FOR PERMIT, BIDDING OR CONSTRUCTION PURPOSES.
ENGINEER:
HOSS FOROUZAN
P.E. SERIAL NO.77748
09/08/2026

CITY OF HOUSTON
HOUSTON PUBLIC WORKS

RECONSTRUCTION & REHABILITATION
COH LIFT STATIONS

ELECTRICAL – RADAR LEVEL TRANSMITTER GAUGING SYSTEM INSTALLATION & DETAILS–I

WBS NUMBER	FOR CITY OF HOUSTON USE ONLY
R–000267–00178–3	
DRAWING SCALE	
AS NOTED	
CITY OF HOUSTON PM	
TAHA LOTIA	
SHEET NO. 144 OF 147	

STD–E–7

PLOTTED: 9/8/2026 4:48 PM
FILE PATH: O:\H8109_Lift Station Rehabilitation And Reconstruction (Tetratech)\6 Drawings\Electrical\Working\Package No.1\General\H8109_GP103.dwg STYLE: GAI.ctb

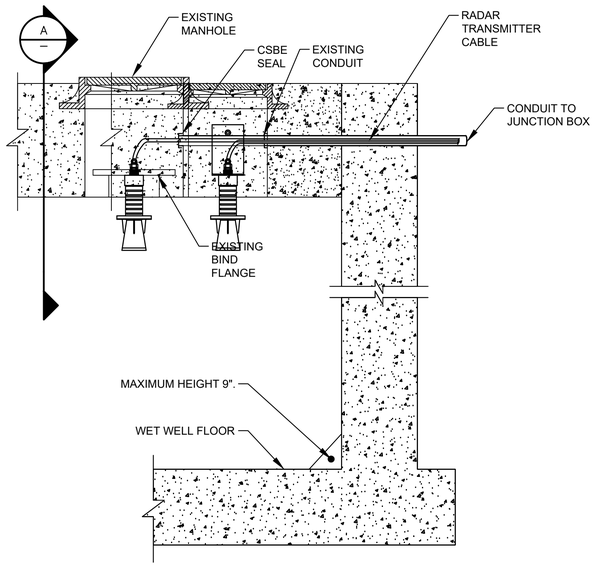

RADAR LEVEL TRANSMITTER MOUNTING
(TYP. LT-1, LT-2)

DETAIL 1
NTS
(SEE NOTES 1, 2, 4, 6 & 7)

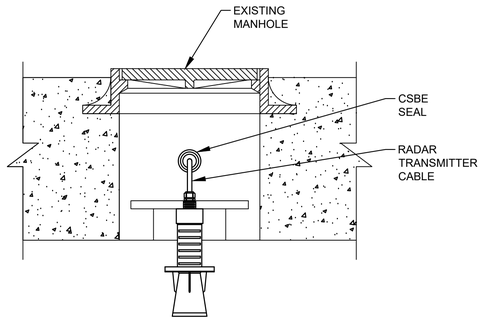

RADAR LEVEL TRANSMITTER MOUNTING
TYP. LT-1 & LT-2

SECTION A
NTS
(SEE NOTES 1, 2, 4, 6 & 7)

NOTES:

1. NEW RADAR LEVEL TRANSMITTERS FOR LT-1, LT-2.
2. EXISTING AIRCELL MANHOLES FOR RADAR LEVEL TRANSMITTERS LT-1, LT-2.
3. EXISTING SUBMERSIBLE TRANSDUCER MANHOLES FOR RADAR LEVEL TRANSMITTERS LT-1, LT-2.
4. PAINT MANHOLE LIDS AND HATCHES HUNTER GREEN.
5. NEW MANHOLE INSTALLATION.
6. RETROFIT MANHOLE INSTALLATION.
7. DEMOLISH ALL EQUIPMENT ASSOCIATED WITH AIRCELL INSIDE THE WETWELL.

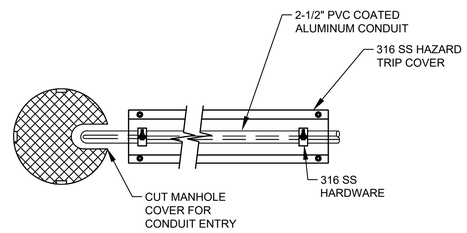

FLOAT SWITCH MOUNTING
TOP VIEW

DETAIL 4
NTS
(SEE NOTES 1, 4, 5 & 6)

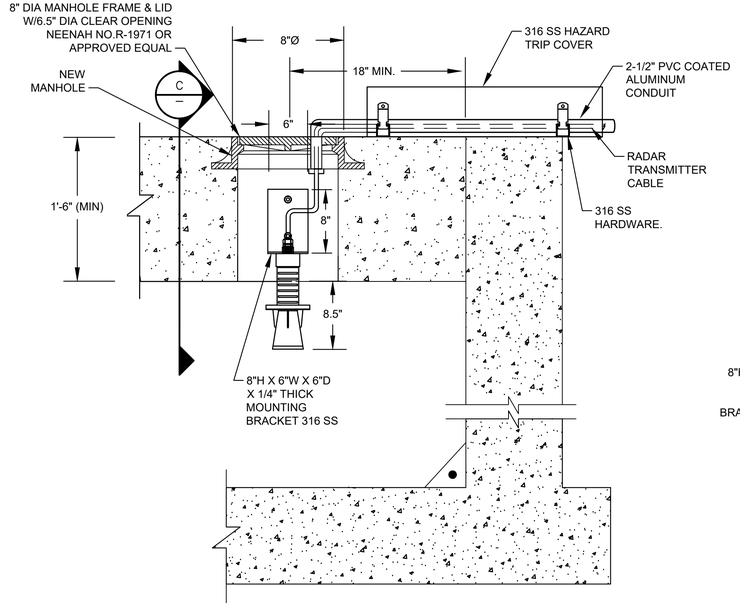

RADAR LEVEL TRANSMITTER MOUNTING
(TYP. LT-1, LT-2)

DETAIL 3
NTS
(SEE NOTES 1, 4, 5 & 6)

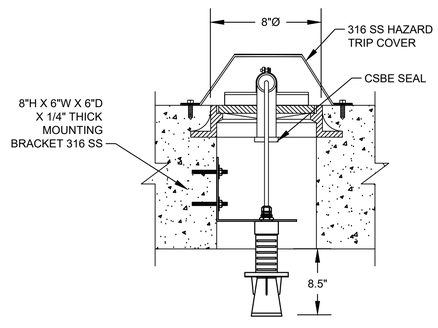

RADAR LEVEL TRANSMITTER MOUNTING
TYP. LT-1 & LT-2

SECTION C
NTS
(SEE NOTES 1, 4, 5 & 6)

NO.	DATE	REVISION	APP.
	MM/DD/YY	BRIEF DESCRIPTION	XXX
	MM/DD/YY	BRIEF DESCRIPTION	XXX
	MM/DD/YY	BRIEF DESCRIPTION	XXX

rps
A TETRA TECH COMPANY
Texas PE Firm Reg. #F-929
575 N. Dairy Ashford, Suite 700, Houston, Texas 77079
T +1 281 589 7257
E usinfrastructure@rpsgroup.com

FOR INTERIM REVIEW ONLY NOT INTENDED FOR PERMIT, BIDDING OR CONSTRUCTION PURPOSES.
ENGINEER:
HOSS FOROUZAN
P.E. SERIAL NO.77748
09/08/2026

SURVEYED BY:
FB NO. F-4578

CITY OF HOUSTON
HOUSTON PUBLIC WORKS

RECONSTRUCTION & REHABILITATION
COH LIFT STATIONS

ELECTRICAL – RADAR LEVEL TRANSMITTER GAUGING SYSTEM INSTALLATION & DETAILS–II

WBS NUMBER	FOR CITY OF HOUSTON USE ONLY
R-000267-00178-3	
DRAWING SCALE	
AS NOTED	
CITY OF HOUSTON PM	
TAHA LOTIA	
SHEET NO. 145 OF 147	

STD-E-8

FILE PATH: O:\H8109_Lift Station Rehabilitation And Reconstruction (Tetratech)\6 Drawings\Electrical\Working\Package No.1\General\H8109_GPLOT.dwg PLOTTED: 9/8/2026 4:48 PM
PLOTTED: 9/8/2026 4:48 PM
PLOTTED: 9/8/2026 4:48 PM

PLOTTED: 9/8/2026 4:48 PM
FILE PATH: O:\H8109_Lift Station Rehabilitation And Reconstruction (Tetratech)\6 Drawings\Electrical\Working\Package No.1\General\H8109_GEN00001.dwg STYLE: GAI.ctb

PRIMARY FLOW ELEMENTS

	MAGNETIC FLOW METER
	ULTRASONIC DOPPLER FLOW METER
	ULTRASONIC TIME TRANSIT FLOW METER
	VORTEX FLOW METER
	VENTURI TUBE
	TURBINE OR PROPELLER TYPE METER
	ROTAMETER
	PITOT TUBE
	WEIR FLOW METER
	PARSHALL FLUME OR TRAPEZOIDAL FLUME
	ORIFICE PLATE
	THERMAL MASS FLOWMETER

PRIMARY LEVEL ELEMENTS

	ULTRASONIC LEVEL TRANSDUCER
	RADAR LEVEL TRANSDUCER
	PRIMARY ELEMENT PRESSURE PROBE LEVEL TRANSMITTER
	BUBBLER LEVEL TUBE ELEMENT
	CONDUCTIVE LEVEL PROBE
	FLOAT SWITCH

VALVES

	VALVE - OTHER IN-LINE TYPE NOT OTHERWISE IDENTIFIED
	THREE-WAY VALVE
	BALL VALVE
	GLOBE VALVE
	PINCH VALVE
	GATE VALVE
	NEEDLE VALVE
	DIAPHRAGM VALVE
	BUTTERFLY VALVE
	CHECK VALVE WITH FLOW DIRECTION
	PLUG VALVE
	PRESSURE-REDUCING REGULATOR INTERNAL PRESSURE TAP
	BACK PRESSURE REGULATOR INTERNAL PRESSURE TAP
	PRESSURE-REDUCING REGULATOR EXTERNAL PRESSURE TAP
	BACK PRESSURE REGULATOR EXTERNAL PRESSURE TAP

VALVES

S	SOLENOID ACTUATED VALVE
	"X" = P: AIR CYLINDER; O: OIL CYLINDER; H: HYDRAULIC CYLINDER; E: ELECTRIC MOTOR; S: SOLENOID VALVE
OR NO SYMBOL	MANUAL VALVE

MISC PROCESS SYMBOLS

	ANNULAR TYPE SEAL
	CHEMICAL INJECTION POINT
	STRAINER
	DRAIN
	NORMAL OPERATING LEVEL
UV	UV CHAMBER
	FLOW STRAIGHTENER
	LOAD CELL
	SPRAY NOZZLE
	BLIND FLANGE
	FLANGE
	DIAPHRAGM SEAL
	PRESSURE RELIEF (OUT)
	VACUUM RELIEF (IN)

GATES

	SLUICE/SLIDE GATE
	FLOW CONTROL GATE

MOTORS

M	VARIABLE SPEED MOTOR
M	CONSTANT SPEED MOTOR

PUMPS, BLOWERS AND MISC EQUIPMENT

	CENTRIFUGAL BLOWER
	CENTRIFUGAL PUMP
	DIAPHRAGM PUMP AND MOTOR
	PROGRESSIVE CAVITY PUMP
	SUBMERSIBLE PUMP
	POSITIVE DISPLACEMENT BLOWER

PUMPS, BLOWERS AND MISC EQUIPMENT

	MIXER/FLOCCULATOR/AERATOR
	VERTICAL PUMP-1 USED WHEN DISCHARGE LINE IS IN WETWELL
	VERTICAL PUMP-2 USED WHEN DISCHARGE LINE IS EXPOSED.
	VERTICAL PUMP SHAFT USED WHEN INTAKE OF PUMP IS ENCASED.
	SUBMERSIBLE MIXER
	COMPRESSOR
	HEAT EXCHANGER
	FEED PUMP
	GRINDER/MACERATOR
	METERING PUMP
	PLUNGER PUMP
	PERISTALTIC METERING PUMP
	CENTRIFUGE
	PULSATION DAMPENER
	TURBO BLOWER

PUMPS, BLOWERS AND MISC EQUIPMENT

	ROTARY SCREEN

CONTROL ENCLOSURE, INSTRUMENTS AND SCADA

XXX / P AAA YY / BBB / CCC D / ZZZ	DIGITAL/ANALOG INSTRUMENT AAA: ISA TAG (REFER TO TABLE) BBB: LOOP NUMBER CCC: LOOP NUMBER SUB D: DIVISION NUMBER P: POWER REQUIREMENT XXX: DESCRIPTION (USED ON PANEL INSTRUMENTS) YY: CHEMICAL ZZZ: LOCATION DIGITAL/ANALOG INSTRUMENT -LOCATED IN THE FIELD -NOT INSIDE OF PANEL -VISIBLE AT FIELD LOCATION -NORMALLY OPERATOR ACCESSIBLE
XXX / P AAA YY / BBB / CCC D / ZZZ	DIGITAL/ANALOG INSTRUMENT -LOCATED ON PANEL -VISIBLE TO OPERATOR -NORMALLY OPERATOR ACCESSIBLE
XXX / P AAA YY / BBB / CCC D / ZZZ	DIGITAL/ANALOG INSTRUMENT -LOCATED INSIDE PANEL -NOT VISIBLE TO OPERATOR -NORMALLY NOT ACCESSIBLE
XXX / AAA / BBB / CCC	DISPLAY (INDICATION/CONTROLLER) AAA: ISA TAG (REFER TO TABLE) BBB: LOOP NUMBER CCC: LOOP NUMBER SUB XXX: DESCRIPTION DISPLAY (INDICATION/CONTROLLER) -LOCATED IN THE FIELD -NOT INSIDE OF PANEL -VISIBLE AT FIELD LOCATION -NORMALLY OPERATOR ACCESSIBLE
XXX / AAA / BBB / CCC	DISPLAY (INDICATION/CONTROLLER) -LOCATED ON PANEL -VISIBLE TO OPERATOR -NORMALLY OPERATOR ACCESSIBLE
XXX / AAA / BBB / CCC	DISPLAY (INDICATION/CONTROLLER) -LOCATED INSIDE PANEL -NOT VISIBLE TO OPERATOR -NORMALLY NOT ACCESSIBLE
-	INTERLOCKING RELAY

CONTROL ENCLOSURE AND SCADA

	DIGITAL INPUT
	DIGITAL OUTPUT
	ANALOG INPUT
	ANALOG OUTPUT
	SURGE SUPPRESSOR
	OPTO ISOLATOR
/	SIGNAL CONVERTER/ ISOLATOR */* - (INPUT/OUTPUT) * DEFINED AS FOLLOWS: E - VOLTAGE I - CURRENT P - PNEUMATIC PD - PULSE DURATION H - HYDRAULIC O - ELECTROMAGNETIC, SONIC R - RESISTANCE (ELECTRIC)

CONTROL ENCLOSURE, INSTRUMENTS AND SCADA

F(X)

PLC/RTU LOGIC

FUNCTION SYMBOLS AND ABBREVIATIONS

K	PROPORTIONAL GAIN OR ATTENUATE (INPUT:OUTPUT)
- K	REVERSE PROPORTIONAL GAIN OR ATTENUATE (INPUT:OUTPUT)
Σ	SUMMING
Σ/n	AVERAGING
Δ	SUBTRACTING
√	EXTRACT SQUARE ROOT
÷	DIVIDE
X	MULTIPLY
S	INTEGRATE
+	BIAS POSITIVE
-	BIAS NEGATIVE
F(x)	NONLINEAR OR UNSPECIFIED FUNCTION
>	HIGH SELECT
<	LOW SELECT
⊦	HIGH LIMIT
⊥	LOW LIMIT

INSTRUMENT (COMMON HOUSING)	INSTRUMENT (SEPERATOR HOUSING)	INSTRUMENT (PART OF MAJOR EQUIPMENT)

GENERAL NOTES:

1. THIS IS A GENERAL LEGEND SHEET, SOME SYMBOLS AND ABBREVIATIONS MAY NOT APPLY TO THIS SPECIFIC PROJECT.
2. THIS LEGEND APPLIES TO INSTRUMENTATION DIAGRAMS ONLY AND MAY DIFFER FROM LEGENDS FOR OTHER SHEETS.
3. IN GENERAL THIS LEGEND SHEET AND THE INSTRUMENTATION DIAGRAMS ARE BASED ON INTERNATIONAL SOCIETY OF AUTOMATION, STANDARDS FOR PRACTICES FOR INSTRUMENTATION, STANDARD S5.1 SOME MODIFICATIONS, ADDITIONS AND ALTERATIONS HAVE BEEN MADE AS REQUIRED TO ACCOMMODATE THE PROJECT REQUIREMENTS.
4. SOME PROCESS ITEMS, SUCH AS EQUIPMENT ISOLATION VALVES, BYPASS LINES, ETC., WHICH ARE NOT CRITICAL FOR AN UNDERSTANDING OF THE INSTRUMENTATION AND CONTROL FUNCTIONS ARE NOT SHOWN ON THE INSTRUMENTATION SHEETS.
5. SEE ELECTRICAL SHEETS AND SPECIFICATIONS FOR ADDITIONAL CONTROL AND INTERLOCK REQUIREMENTS FOR EQUIPMENT NOT SHOWN OR NOT PROVIDED BY THE INSTRUMENTATION SUPPLIER.
6. IN THE EVENT OF DISCREPANCY BETWEEN THE PROCESS & INSTRUMENTATION DIAGRAMS AND THE LOOP DIAGRAMS, THE INFORMATION FROM THE LOOP DIAGRAMS SHALL BE USED.

HAND SWITCH ABBREVIATIONS:

HOA	HAND/OFF/AUTO
HOR	HAND/OFF/REMOTE
LOC	LOCAL/OFF/COMPUTER
LOR	LOCAL/OFF/REMOTE
LOS	LOCKOUT STOP
OSC	OPEN/STOP/CLOSE
RSL	RAISE/STOP/LOWER
L/C	LOCAL/COMPUTER
L/R	LOCAL/REMOTE
O/C	OPEN/CLOSE
S/S	START/STOP
A/M	AUTO/MANUAL
H/C	HAND/COMPUTER
PB	PUSHBUTTON

GENERAL NOTE

THIS IS A STANDARD LEGEND. SOME SYMBOLS MAY NOT APPEAR ON THE DRAWINGS.

NO.	DATE	REVISION	APP.
	MM/DD/YY	BRIEF DESCRIPTION	XXX
	MM/DD/YY	BRIEF DESCRIPTION	XXX
	MM/DD/YY	BRIEF DESCRIPTION	XXX

TETRA TECH COMPANY
Texas PE Firm Reg. #F-929
575 N. Dairy Ashford, Suite 700, Houston, Texas 77079
T +1 281 589 7257
E usinfrastructure@rpsgroup.com

SURVEYED BY:
FB NO. F-4578

FOR INTERIM REVIEW ONLY NOT INTENDED FOR PERMIT, BIDDING OR CONSTRUCTION PURPOSES.
ENGINEER:
HOSS FOROUZAN
P.E. SERIAL NO.77748
09/08/2026

CITY OF HOUSTON
HOUSTON PUBLIC WORKS

RECONSTRUCTION & REHABILITATION
COH LIFT STATIONS

INSTRUMENTATION LEGENDS & SYMBOLS-I

WBS NUMBER	FOR CITY OF HOUSTON USE ONLY
R-000267-00178-3	
DRAWING SCALE	
AS NOTED	
CITY OF HOUSTON PM	
TAHA LOTIA	
SHEET NO. 146 OF 147	

STD-E-9

PLOTTED: 9/8/2026 4:48 PM
FILE PATH: O:\H8109_Lift Station Rehabilitation And Reconstruction (Tetratech)\6 Drawings\Electrical\Working\Package No.1\General\H8109_GEL001.dwg
STYLE: GAI.ctb

LINE SYMBOLS

	MAJOR PROCESS LINE
	MINOR PROCESS LINE
	FUTURE PROCESS LINE
	EXISTING PROCESS LINE
	HARDWIRED SIGNAL
	SOFT LINK
L L	HYDRAULIC LINK
// //	PNEUMATIC LINK
x x	CAPILLARY TUBE OR FILLED SYSTEM SIGNAL
	ELECTROMAGNET OR SONIC SIGNAL (GUIDED)
DESCRIPTION X SHEET# Y	(USED WHEN REFERRING TO A SHEET IN THE DESIGN SET) DESCRIPTION - WHERE FLOW IS GOING SHEET# - WHAT SHEET PROCESS CONTINUES ON X - USED WHEN TWO OR MORE ARROWS ARE REFERING TO THE SAME SHEET. Y - USED WHEN TWO OR MORE ARROWS ARE REFERRING TO THE SAME SHEET.
DESCRIPTION	(USED WHEN REFERRING TO A SHEET NOT IN THE DESIGN SET) DESCRIPTION - WHERE FLOW IS GOING
CAT5e CAT5e	CAT-5e ETHERNET CABLE
CAT6 CAT6	CAT-6 ETHERNET CABLE
- -	MODBUS PLUS CABLE
--	RS-485 CABLE
RS-232 RS-232	RS-232 CABLE
POE POE	POWER OVER ETHERNET CABLE
T1 T1	T1 FIBER CONNECTION
FO FO	NON-SPECIFIC FIBER OPTIC CABLE
100 100	FIBER 100BASE-FX
1000 1000	FIBER 1000BASE-FX
	SIGNAL CROSSING
	PROCESS LINE CROSSING
	PROCESS LINE/ HARDWIRE SIGNAL CROSSING

EQUIPMENT/LOOP TAGGING

X	EQUIPMENT TAG USED TO IDENTIFY NON-INSTRUMENT EQUIPMENT
X	LOOP TAG USED TO TIE THE PROCESS FLOW DIAGRAM TO A LOOP DIAGRAM

STANDARD VALVE AND PIPING USAGE

PDIT 1	BLOCK/BLEED VALVE ARRANGEMENT
PI 1	INSTRUMENTS WITH VALVE ONLY
PI 1	INSTRUMENTS WITH DIAPHRAGM SEAL
PI 1	INSTRUMENTS WITH ANNULAR SEAL

PANEL DETAIL SYMBOLS

RUN	INDICATING LIGHT -R RED (ACTIVE EQUIPMENT) -G GREEN (EQUIPMENT OFF) -W WHITE (POWER) -B BLUE (CONDITION IE BACKWASH IN PROGRESS) -A AMBER (ALARM CONDITION)
H/O/A	SWITCH -L/R (LOCAL - REMOTE) -L/O/A (LOCAL - OFF - AUTO) -L/O/R (LOCAL - OFF - REMOTE) -H/O/A (HAND - OFF - AUTO) -H/O/R (HAND - OFF - REMOTE)
START	PUSHBUTTON
START	PUSHBUTTON
	HORN
	BEACON
OIT	OPERATOR INTERFACE TERMINAL

SECURITY SYSTEM SYMBOLS

CCTV	CLOSED CIRCUIT TELEVISION CAMERA
PTZ	PAN, TILT, ZOOM CAMERA

GENERAL ABBREVIATIONS

AI	ANALOG INPUT
AL	ALARM PILOT LIGHT
AO	ANALOG OUTPUT
AS	AIR SUPPLY
ASP	APPLICATION SERVICE PROVIDER
BFV	BUTTERFLY VALVE
CCTV	CLOSED CIRCUIT TELEVISION
CH4	METHANE
CL2	CHLORINE
COND	CONDUCTIVITY
COMP	COMPUTER
CP	CONTROL PANEL
CPU	CENTRAL PROCESSING UNIT
CRC	CONTROL ROOM CONSOLE
CTU	CENTRAL TELEMETRY UNIT
DCU	DISTRIBUTED CONTROL UNIT
DI	DIGITAL OR DISCRETE INPUT
DO	DISSOLVED OXYGEN OR DIGITAL OUTPUT
DPU	DISTRIBUTED PROCESSING UNIT
EPP	ETHERNET PATCH PANEL
ES	EMERGENCY STOP
ESW	ETHERNET SWITCH
ETM	ELAPSED TIME METER
FC	FAIL CLOSED
FCP	FIELD CONTROL PANEL
FCS	FILTER CONTROL STATION
FCV	FLOW CONTROL VALVE
FLP	FAIL LAST POSITION
FO	FAIL OPEN
FOPP	FIBER OPTIC PATCH PANEL
FPR	FEEDER PROTECTION RELAY
H2S	HYDROGEN SULFIDE
HMI	HUMAN MACHINE INTERFACE
JB	JUNCTION BOX
IO	INPUT/OUTPUT
IR	INFARED
LAS	LIQUID AMMONIA SULFATE
LCP	LOCAL CONTROL PANEL
LCS	LOCAL CONTROL STATION
LT	LEVEL TRANSMITTER
LPU	LOCAL PROCESSING UNIT
LTS	LOCAL TERMINAL SYSTEM
MC	MOTOR CONTROLLER
NAOCL	SODIUM HYPOCHLORIDE
NC	NORMALLY CLOSED
NH3	AMMONIA
NIM	NETWORK INTERFACE MODULE
NO	NORMALLY OPEN
MCC	MOTOR CONTROL CENTER
MM	MULTI MODE FIBER OPTIC CABLE
MPR	MOTOR PROTECTION RELAY
OIT	OPERATIONS INTERFACE TERMINAL
OL	OVERLOAD
OWS	OPERATOR WORKSTATION
PB	PUSH BUTTON
PCSI	PROCESS CONTROL SYSTEM INTEGRATOR
pH	HYDROGEN ION
PLC	PROGRAMMABLE LOGIC CONTROLLER
PMCS	PROCESS MONITORING CONTROL SYSTEM
POLY	POLYMER
PQM	POWER QUALITY METER
PS	POWER SUPPLY
PSU	POWER SUPPLY UNIT
PV	PINCH VALVE
RBC	REMOTE BASE CONTROLLER
RIO	REMOTE INPUT OUTPUT
RTU	REMOTE TERMINAL UNIT
SCADA	SUPERVISORY CONTROL AND DATA AQUISITION
SM	SINGLE MODE FIBER OPTIC CABLE
SO2	SULFUR DIOXIDE
SOL	SOLENOID
SPD	SURGE PROTECTION DEVICE
UPS	UNINTERRUPTIBLE POWER SUPPLY
TC	TERMINATION CABINET
TURB	TURBIDITY
VIB	VIBRATION
VFD	VARIABLE FREQUENCY DRIVE
VLV	VALVE

MEANINGS OF IDENTIFICATION LETTERS

THIS TABLE APPLIES ONLY TO THE FUNCTIONAL IDENTIFICATION OF INSTRUMENTS.

	FIRST LETTER		SUCCEEDING LETTERS		
	MEASURED OR INITIATING VARIABLE	MODIFIER	READOUT OR PASSIVE FUNCTION	OUTPUT FUNCTION	MODIFIER
A	ANALYSIS/ANALYTICAL		ALARM		
B	BURNER, COMBUSTION			CLOSE, STOP, DECREASE (1)	
C	CONDUCTIVITY			CONTROL	
D	DENSITY (MASS) OR SPECIFIC GRAVITY	DIFFERENTIAL		OPEN START, INCREASE (1)	
E	VOLTAGE (EMF)		SENSOR (PRIMARY ELEMENT)		
F	FLOW RATE	RATIO (FRACTION)			FAIL (1)
G	GAUGING (DIMENSIONAL)		GLASS VIEWING DEVICE		
H	HAND				HIGH OR OPEN
I	CURRENT (ELECTRICAL)		INDICATE		
J	POWER	SCAN			
K	TIME OR TIME SCHEDULE	TIME RATE OR CHANGE		CONTROL STATION	
L	LEVEL		LIGHT (PILOT)		LOW OR CLOSED
M	MOISTURE, HUMIDITY, MOTOR, MOTION	MOMENTARY		MOTOR (1)	MIDDLE OR INTERMEDIATE
N	USERS CHOICE		USER'S CHOICE		ON OR OPERATE (1)
O	USER'S CHOICE		ORIFICE (RESTRICTION)		OVERLOAD (1)
P	PRESSURE OR VACUUM		POINT (TEST CONNECTION)	PUMP (1)	
Q	QUANTITY (2)	INTEGRATE OR TOTALIZE			
R	RADIATION		RECORD		
S	SPEED OR FREQUENCY	SAFETY		SWITCH	
T	TEMPERATURE			TRANSMIT	
U	MULTIVARIABLE (2)		MULTIFUNCTION (2)	MULTIFUNCTION (2)	MULTIFUNCTION (2)
V	VIBRATION, MECHANICAL ANALYSIS			VALVE, DAMPER OR LOUVER	
W	WEIGHT OR FORCE		WELL		UNCLASSIFIED (2)
X	UNCLASSIFIED (2)	X AXIS	UNCLASSIFIED (2)	UNCLASSIFIED (2)	UNCLASSIFIED (2)
Y	EVENT, STATE, PRESENCE	Y AXIS		RELAY, COMPUTE, CONVERT	
Z	POSITION, DIMENSION	Z AXIS		DRIVE, ACTUATE OR UNCLASSIFIED FINAL CONTROL ELEMENT	

COMMON HMI/INSTRUMENT ISA TAGGING

ABBREVIATION	MEANING
AIT	ANALYTICAL INDICATING TRANSMITTER
AE	ANALYTICAL ELEMENT
AI	CHEMICAL RESIDUAL/INDICATION
CT	CYCLE TIMER
FIT	FLOW INDICATING TRANSMITTER
FE	FLOW ELEMENT
FI	FLOW INDICATION
FS	FLOAT SWITCH
HS	HAND SWITCH
JAL	POWER ALARM LOW
II	CURRENT INDICATION
LIT	LEVEL INDICATING TRANSMITTER
LE	LEVEL ELEMENT
LI	LEVEL INDICATION
LSH	LEVEL SWITCH HIGH
LSL	LEVEL SWITCH LOW
LAL	LEVEL ALARM LOW
LAH	LEVEL ALARM HIGH
PIT	PRESSURE INDICATING TRANSMITTER
PE	PRESSURE ELEMENT
PI	PRESSURE INDICATION
PPU	PERPETUAL POWER UNIT
PSH	PRESSURE SWITCH HIGH
PSL	PRESSURE SWITCH LOW
SI	SPEED INDICATION
SIC	SPEED INDICATING CONTROLLER
TIT	TEMPERATURE INDICATING TRANSMITTER
TE	TEMPERATURE ELEMENT
TI	TEMPERATURE INDICATION
TSH	TEMPERATURE SWITCH HIGH
WIT	WEIGHT INDICATING TRANSMITTER
WE	WEIGHT ELEMENT
WI	WEIGHT INDICATION
XA	FAULT ANNUNCIATION
YL	MISC. EVENT LIGHT (IN REMOTE)

COMMON HMI/INSTRUMENT ISA TAGGING

ABBREVIATION	MEANING
ZCH	OPEN GATE/VALVE
ZCL	CLOSE GATE/VALVE
ZSH	POSITION SWITCH HIGH
ZSL	POSITION SWITCH LOW
ZLH	VALVE/GATE OPEN
ZLL	VALVE/GATE CLOSED
ZIT	POSITION INDICATING TRANSMITTER

GENERAL NOTE

THIS IS A STANDARD LEGEND. SOME SYMBOLS MAY NOT APPEAR ON THE DRAWINGS.

NO.	DATE	REVISION	APP.
	MM/DD/YY	BRIEF DESCRIPTION	XXX
	MM/DD/YY	BRIEF DESCRIPTION	XXX
	MM/DD/YY	BRIEF DESCRIPTION	XXX

RPS A TETRA TECH COMPANY
Texas PE Firm Reg. #F-929
575 N. Dairy Ashford, Suite 700, Houston, Texas 77079
T +1 281 589 7257
E usinfrastructure@rpsgroup.com

SURVEYED BY:
FB NO. F-4578

FOR INTERIM REVIEW ONLY NOT INTENDED FOR PERMIT, BIDDING OR CONSTRUCTION PURPOSES.
ENGINEER:
HOSS FOROUZAN
P.E. SERIAL NO.77748
09/08/2026

CITY OF HOUSTON
HOUSTON PUBLIC WORKS

RECONSTRUCTION & REHABILITATION
COH LIFT STATIONS

INSTRUMENTATION LEGENDS & SYMBOLS–II

WBS NUMBER	FOR CITY OF HOUSTON USE ONLY
R-000267-00178-3	
DRAWING SCALE	
AS NOTED	
CITY OF HOUSTON PM	
TAHA LOTIA	
SHEET NO. 147 OF 147	

STD–E–10